AUTHENTICATED
U.S. GOVERNMENT
INFORMATION
GPO

Federal Register

1–30–03 Thursday
Vol. 68 No. 20 Jan. 30, 2003
Pages 4681–4888

The **FEDERAL REGISTER** is published daily, Monday through Friday, except official holidays, by the Office of the Federal Register, National Archives and Records Administration, Washington, DC 20408, under the Federal Register Act (44 U.S.C. Ch. 15) and the regulations of the Administrative Committee of the Federal Register (1 CFR Ch. I). The Superintendent of Documents, U.S. Government Printing Office, Washington, DC 20402 is the exclusive distributor of the official edition.

The **Federal Register** provides a uniform system for making available to the public regulations and legal notices issued by Federal agencies. These include Presidential proclamations and Executive Orders, Federal agency documents having general applicability and legal effect, documents required to be published by act of Congress, and other Federal agency documents of public interest.

Documents are on file for public inspection in the Office of the Federal Register the day before they are published, unless the issuing agency requests earlier filing. For a list of documents currently on file for public inspection, see http://www.nara.gov/fedreg.

The seal of the National Archives and Records Administration authenticates the Federal Register as the official serial publication established under the Federal Register Act. Under 44 U.S.C. 1507, the contents of the **Federal Register** shall be judicially noticed.

The **Federal Register** is published in paper and on 24x microfiche. It is also available online at no charge as one of the databases on GPO Access, a service of the U.S. Government Printing Office.

The online edition of the **Federal Register** is issued under the authority of the Administrative Committee of the Federal Register as the official legal equivalent of the paper and microfiche editions (44 U.S.C. 4101 and 1 CFR 5.10). It is updated by 6 a.m. each day the **Federal Register** is published and it includes both text and graphics from Volume 59, Number 1 (January 2, 1994) forward.

GPO Access users can choose to retrieve online **Federal Register** documents as TEXT (ASCII text, graphics omitted), PDF (Adobe Portable Document Format, including full text and all graphics), or SUMMARY (abbreviated text) files. Users should carefully check retrieved material to ensure that documents were properly downloaded.

On the World Wide Web, connect to the **Federal Register** at http://www.access.gpo.gov/nara. Those without World Wide Web access can also connect with a local WAIS client, by Telnet to swais.access.gpo.gov, or by dialing (202) 512–1661 with a computer and modem. When using Telnet or modem, type swais, then log in as guest with no password.

For more information about GPO Access, contact the GPO Access User Support Team by E-mail at gpoaccess@gpo.gov; by fax at (202) 512–1262; or call (202) 512–1530 or 1–888–293–6498 (toll free) between 7 a.m. and 5 p.m. Eastern time, Monday–Friday, except Federal holidays.

The annual subscription price for the **Federal Register** paper edition is $699, or $764 for a combined **Federal Register, Federal Register** Index and List of CFR Sections Affected (LSA) subscription; the microfiche edition of the **Federal Register** including the **Federal Register** Index and LSA is $264. Six month subscriptions are available for one-half the annual rate. The charge for individual copies in paper form is $10.00 for each issue, or $10.00 for each group of pages as actually bound; or $2.00 for each issue in microfiche form. All prices include regular domestic postage and handling. International customers please add 25% for foreign handling. Remit check or money order, made payable to the Superintendent of Documents, or charge to your GPO Deposit Account, VISA, MasterCard or Discover. Mail to: New Orders, Superintendent of Documents, P.O. Box 371954, Pittsburgh, PA 15250–7954.

There are no restrictions on the republication of material appearing in the **Federal Register.**

How To Cite This Publication: Use the volume number and the page number. Example: 68 FR 12345.

SUBSCRIPTIONS AND COPIES

PUBLIC

Subscriptions:

Paper or fiche	**202–512–1800**
Assistance with public subscriptions	**202–512–1806**

General online information **202–512–1530; 1–888–293–6498**

Single copies/back copies:

Paper or fiche	**202–512–1800**
Assistance with public single copies	**1–866–512–1800 (Toll-Free)**

FEDERAL AGENCIES

Subscriptions:

Paper or fiche	**202–741–6005**
Assistance with Federal agency subscriptions	**202–741–6005**

What's NEW!

Federal Register Table of Contents via e-mail

Subscribe to FEDREGTOC, to receive the **Federal Register** Table of Contents in your e-mail every day.

If you get the HTML version, you can click directly to any document in the issue.

To subscribe, go to **http://listserv.access.gpo.gov** and select:

Online mailing list archives
FEDREGTOC-L
Join or leave the list

Then follow the instructions.

Printed on recycled paper.

Contents

Federal Register

Vol. 68, No. 20

Thursday, January 30, 2003

Agriculture Department
See Food and Nutrition Service
See Forest Service
See Rural Utilities Service

Air Force Department
NOTICES
Meetings:
Community College Board of Visitors, 4767

Census Bureau
NOTICES
Agency information collection activities:
Proposed collection; comment request, 4755–4756

Civil Rights Commission
NOTICES
Meetings; State advisory committees:
Arizona, 4755
Texas, 4755

Commerce Department
See Census Bureau
See Foreign-Trade Zones Board
See International Trade Administration
See National Institute of Standards and Technology
See National Oceanic and Atmospheric Administration

Consumer Product Safety Commission
RULES
Federal Hazardous Substances Act:
Model rocket propellant devices used with lightweight surface vehicles; exemptions, 4697–4699

Copyright Office, Library of Congress
PROPOSED RULES
Copyright Arbitration Royalty Panel rules and procedures:
Digital performance of sound recordings by preexisting subscription services; reasonable rates and terms determination, 4744–4747

Defense Department
See Air Force Department
PROPOSED RULES
Federal Acquisition Regulation (FAR):
Commercially available off-the-shelf items, 4873–4874
Depreciation cost principle, 4875–4877
Insurance and pension costs, 4879–4883
NOTICES
Agency information collection activities:
Proposed collection; comment request, 4766
Submission for OMB review; comment request, 4766–4767

Education Department
NOTICES
Grantback arrangements; award of funds:
Illinois; compromise of claim intent; comment request, 4767–4768
Grants and cooperative agreements; availability, etc.:
Special education and rehabilitative services—
Technical Assistance ALLIANCE for Parent Centers Program, 4768–4769

Employment Standards Administration
NOTICES
Agency information collection activities:
Proposed collection; comment request, 4797–4798

Energy Department
See Federal Energy Regulatory Commission
NOTICES
Defense Nuclear Facilities Safety Board recommendations:
Defense nuclear complex; weapons laboratory support, 4769

Environmental Protection Agency
RULES
Air quality planning purposes; designation of areas:
Missouri and Illinois, 4835–4841
PROPOSED RULES
Air quality implementation plans; approval and promulgation; various States; air quality planning purposes; designation of areas:
Missouri and Illinois, 4846–4860
Air quality implementation plans; approval and promulgation; various States:
Missouri, 4841–4847
NOTICES
Meetings:
Science Advisory Board, 4775–4777
Reports and guidance documents; availability, etc.:
Enforcement and Compliance History Online Web site, 4777
Toxic and hazardous substances control:
New chemicals—
Receipt and status information, 4777–4785

Executive Office of the President
See Presidential Documents

Federal Aviation Administration
PROPOSED RULES
Airworthiness directives:
Boeing, 4731–4737
Bombardier, 4737–4739
Dassault, 4739–4741
Empresa Brasileira de Aeronautica S.A. (EMBRAER), 4725–4727
Honeywell, 4730–4731
McDonnell Douglas, 4727–4729
Colored Federal airways, 4741–4742
VOR and colored Federal airways, 4742–4743
NOTICES
Meetings:
RTCA, Inc., 4811–4812
Reports and guidance documents; availability, etc.:
Transport category airplanes—
Strengthened flightdeck doors; certification, 4812

Federal Election Commission
NOTICES
Meetings; Sunshine Act, 4785

Federal Energy Regulatory Commission
NOTICES
Electric rate and corporate regulation filings:
Avista Corp. et al., 4771–4772
Environmental statements; availability, etc.:
Williston Basin Interstate Pipeline Co., 4772–4774
Hydroelectric applications, 4774–4775
Practice and procedure:
Off-the-record communications, 4775
Applications, hearings, determinations, etc.:
Northeast Generation Co., 4769–4770
Northern Natural Gas Co. et al., 4770
Tennessee Gas Pipeline Co., 4770–4771
Texas Gas Transmission Corp., 4771

Federal Highway Administration
PROPOSED RULES
Transportation Equity Act for 21st Century; implementation:
Federal Lands Highway Program; transportation planning procedures and management systems—
Indian Affairs Bureau and Indian Reservation Roads Program; public informational meeting, 4744

Federal Reserve System
NOTICES
Banks and bank holding companies:
Formations, acquisitions, and mergers, 4786

Food and Drug Administration
RULES
Animal drugs, feeds, and related products:
Ivermectin pour-on, 4712–4713
NOTICES
Medical devices:
Class II devices—
Ceramic dental restoration systems; data acquisition unit; premarket notification exemption, 4787–4788
Reports and guidance documents; availability, etc.:
Race and ethnicity data collection in clinical trials for FDA regulated products, 4788–4789

Food and Nutrition Service
NOTICES
Child nutrition programs:
Summer Food Service Program—
Reimbursement rates (2003 CY), 4751–4752

Foreign-Trade Zones Board
NOTICES
Applications, hearings, determinations, etc.:
Louisiana
Murphy Oil USA, Inc.; oil refinery complex, 4757
Ohio, 4757

Forest Service
NOTICES
Environmental statements; notice of intent:
Idaho Panhandle National Forests, ID, 4752–4753
Meetings:
Resource Advisory Committees—
Southwest Idaho, 4753

General Services Administration
PROPOSED RULES
Federal Acquisition Regulation (FAR):
Commercially available off-the-shelf items, 4873–4874
Depreciation cost principle, 4875–4877
Insurance and pension costs, 4879–4883

Government Ethics Office
RULES
Government Ethics:
Post-employment conflict of interest restrictions; departmental component designations revision, 4681–4684

Health and Human Services Department
See Food and Drug Administration
NOTICES
Agency information collection activities:
Proposed collection; comment request, 4786–4787

Interior Department
See Land Management Bureau
See Minerals Management Service
See National Park Service
See Reclamation Bureau

International Trade Administration
NOTICES
Antidumping:
Extruded rubber thread from—
Indonesia, 4757–4758
Fresh garlic from—
China, 4758–4760
Honey from—
China, 4760–4761
Natural bristle paint brushes and brush heads from—
China, 4761–4762
Non-frozen apple juice concentrate from—
China, 4762–4763
Polyvinyl alcohol from—
China and Korea, 4763
Stainless steel butt-weld pipe fittings from—
Taiwan, 4763–4766

International Trade Commission
NOTICES
Meetings; Sunshine Act, 4796–4797

Justice Department
See Justice Programs Office

Justice Programs Office
NOTICES
Agency information collection activities:
Proposed collection; comment request, 4797

Labor Department
See Employment Standards Administration

Land Management Bureau
NOTICES
Helium:
Amarillo, TX; Cliffside Field; Conservation Helium sale; implementation, 4789–4792
Meetings:
National Petroleum Reserve-Alaska Research and Monitoring Advisory Team, 4792

Library of Congress
See Copyright Office, Library of Congress

Maritime Administration
NOTICES
Agency information collection activities:
Proposed collection; comment request, 4812–4813

Submission for OMB review; comment request, 4813

Minerals Management Service
NOTICES
Agency information collection activities:
Proposed collection; comment request, 4792–4794

National Aeronautics and Space Administration
PROPOSED RULES
Federal Acquisition Regulation (FAR):
Commercially available off-the-shelf items, 4873–4874
Depreciation cost principle, 4875–4877
Insurance and pension costs, 4879–4883

National Archives and Records Administration
NOTICES
Agency records schedules; availability, 4798–4800

National Council on Disability
NOTICES
Meetings:
International Watch Advisory Committee; correction, 4800

National Institute of Standards and Technology
RULES
National Construction Safety Team Act; implementation, 4693–4697

National Oceanic and Atmospheric Administration
RULES
Fishery conservation and management:
West Coast States and Western Pacific fisheries—
Pacific Coast groundfish; correction, 4719–4724
PROPOSED RULES
Marine mammals:
Taking and importing—
Eastern North Pacific Southern Resident killer whales, 4747–4750

National Park Service
NOTICES
Environmental statements; availability, etc.:
Big South Fork National River and Recreation Area, KY and TN, 4794
Meetings:
Acadia National Park Advisory Commission, 4794–4795
Gettysburg National Military Park Advisory Commission, 4795
Realty actions; sales, leases, etc.:
Virginia, 4795–4796

Nuclear Regulatory Commission
NOTICES
Reports and guidance documents; availability, etc.:
Decommissioning reference non-fuel-cycle facilities; revised analysis, 4801
Applications, hearings, determinations, etc.:
Exelon Generation Co., LLC, 4800–4801

Personnel Management Office
RULES
Pay administration:
Administratively uncontrollable overtime pay, 4681

Postal Service
RULES
Domestic Mail Manual:
Outside-country periodicals co-palletization and drop-ship classification; experimental testing, 4713–4717

Presidential Documents
PROCLAMATIONS
Special observances:
National Consumer Protection Week (Proc. 7643), 4885–4888

Public Health Service
See Food and Drug Administration

Reclamation Bureau
NOTICES
Closure orders:
Nimbus Dam and power plant, CA, 4796

Rural Utilities Service
RULES
Rural Broadband Access Loans and Loan Guarantees, 4684–4692
NOTICES
Applications, hearings, determinations, etc.:
Rural Broadband Access Loans and Loan Guarantees Program, 4753–4755

Securities and Exchange Commission
RULES
Securities:
Sarbanes-Oxley Act of 2002; implementation—
Non-generally accepted accounting principles (GAAP) financial measures; conditions for use, 4819–4833
Securities, etc.:
Sarbanes-Oxley Act of 2002; implementation—
Audits and reviews; relevant records retention, 4861–4872
NOTICES
Investment Company Act of 1940:
Exemption applications—
LB Series Fund Inc. et al., 4801–4803
Nationwide Life Insurance Co. et al., 4803–4810
Self-regulatory organizations; proposed rule changes:
National Association of Securities Dealers, Inc., 4810

Social Security Administration
RULES
Social security benefits:
Federal old age, survivors, and disability insurance—
Changes in retirement age, 4700–4712

State Department
NOTICES
Art objects; importation for exhibition:
Ernst Ludwig Kirchner (1880-1938), 4810–4811
Van Gogh: Fields, 4811
Foreign terrorists and terrorist organizations; designation:
Lashkar i Jhangvi, 4811

Tennessee Valley Authority
RULES
Freedom of Information Act; implementation, 4699–4700
NOTICES
Agency information collection activities:
Submission for OMB review; comment request, 4811

Transportation Department
See Federal Aviation Administration

See Federal Highway Administration
See Maritime Administration
See Transportation Statistics Bureau

Transportation Statistics Bureau
RULES
Motor carrier reports:
Obsolete references and minor editorial corrections, 4718–4719

Treasury Department
NOTICES
Reports and guidance documents; availability, etc.:
Alternative fuel vehicle acquisitions; annual reports (1999-2001 FYs), 4813

Veterans Affairs Department
NOTICES
Agency information collection activities:
Proposed collection; comment request, 4813–4815
Submission for OMB review; comment request, 4816–4817
Meetings:
Homeless Veterans Advisory Committee, 4817–4818

Separate Parts In This Issue

Part II
Securities and Exchange Commission, 4819–4833

Part III
Environmental Protection Agency, 4835–4860

Part IV
Securities and Exchange Commission, 4861–4872

Part V
Defense Department; General Services Administration; National Aeronautics and Space Administration, 4873–4874

Part VI
Defense Department; General Services Administration; National Aeronautics and Space Administration, 4875–4877

Part VII
Defense Department; General Services Administration; National Aeronautics and Space Administration, 4879–4883

Part VIII
Executive Office of the President, Presidential Documents, 4885–4888

Reader Aids
Consult the Reader Aids section at the end of this issue for phone numbers, online resources, finding aids, reminders, and notice of recently enacted public laws.

To subscribe to the Federal Register Table of Contents LISTSERV electronic mailing list, go to http://listserv.access.gpo.gov and select Online mailing list archives, FEDREGTOC-L, Join or leave the list (or change settings); then follow the instructions.

CFR PARTS AFFECTED IN THIS ISSUE

A cumulative list of the parts affected this month can be found in the Reader Aids section at the end of this issue.

3 CFR

Proclamations:

7643 4887

5 CFR

550 4681
2641 4681

7 CFR

1738 4684

14 CFR

Proposed Rules:

39 (6 documents) ...4725, 4727, 4730, 4731, 4737, 4739
71 (2 documents) 4741, 4742

15 CFR

270 4693

16 CFR

1500 4697

17 CFR

210 4862
228 4820
229 4820
244 4820
249 4820

18 CFR

1301 4699

20 CFR

404 4700

21 CFR

510 4712
524 4712

23 CFR

Proposed Rules:

973 4744

37 CFR

Proposed Rules:

260 4744

39 CFR

111 4713

40 CFR

81 4836

Proposed Rules:

52 (2 documents) 4842, 4847
81 4847

48 CFR

Proposed Rules:

2 (2 documents) 4874, 4876
12 4874
31 (2 documents) 4876, 4880
52 (2 documents) 4874, 4880

49 CFR

1420 4718

50 CFR

660 4719

Proposed Rules:

216 4747

Rules and Regulations

Federal Register
Vol. 68, No. 20
Thursday, January 30, 2003

This section of the FEDERAL REGISTER contains regulatory documents having general applicability and legal effect, most of which are keyed to and codified in the Code of Federal Regulations, which is published under 50 titles pursuant to 44 U.S.C. 1510.

The Code of Federal Regulations is sold by the Superintendent of Documents. Prices of new books are listed in the first FEDERAL REGISTER issue of each week.

OFFICE OF PERSONNEL MANAGEMENT

5 CFR Part 550

RIN 3206–AJ57

Administratively Uncontrollable Overtime Pay

AGENCY: Office of Personnel Management.

ACTION: Final rule.

SUMMARY: The Office of Personnel Management is issuing final regulations concerning the rules governing payment of administratively uncontrollable overtime (AUO) pay. AUO is a form of premium pay paid to employees in positions in which the hours of duty cannot be controlled administratively and which require substantial amounts of irregular or occasional overtime work. This final rule permits agencies to pay AUO pay to an employee during a temporary assignment that would not otherwise warrant the payment of AUO pay, if the temporary assignment is directly related to a national emergency declared by the President. In determining the average hours used in computing future AUO payments, this final rule also excludes from consideration the time period for which AUO pay is paid during a temporary assignment.

DATES: March 3, 2003.

FOR FURTHER INFORMATION CONTACT: Kevin Kitchelt, (202) 606–2858; FAX: (202) 606–0824; e-mail: *payleave@opm.gov.*

SUPPLEMENTARY INFORMATION: On February 13, 2002, the Office of Personnel Management issued interim regulations (67 FR 6640) to permit agencies to pay AUO pay to an employee during a temporary assignment that would not otherwise warrant the payment of AUO pay, if the temporary assignment is directly related to a national emergency. We proposed that an agency should be permitted to continue to pay AUO pay for a period of not more than 30 consecutive workdays for such a temporary assignment and for a total of not more than 90 workdays in a calendar year while on such a temporary assignment. The 90-day comment period ended on April 15, 2002. We received comments from two Federal agencies and an employee association.

One agency suggested that the phrase ''declared by the President'' be added to the regulation at 5 CFR 550.162(g), which states that an agency may continue to pay AUO pay during a temporary assignment that would not otherwise warrant AUO pay, if the temporary assignment is directly related to a national emergency. We agree and have added the phrase ''declared by the President'' to 5 CFR 550.162(g).

Another agency requested that we explain the relationship between the existing 60-workday annual limitation for temporary assignments in the last paragraph of 5 CFR 550.162(c) and the new 90-workday annual limitation for temporary assignments directly related to a national emergency in 5 CFR 550.162(g). The new 90-workday annual limitation is separate from the 60-workday limitation provided in 5 CFR 550.162(c). Therefore, 150 workdays is the theoretical maximum number of workdays in a calendar year during which an agency may continue to pay AUO pay for temporary assignments provided the conditions in both 5 CFR 550.162(c) and (g) are met.

The employee association provided several comments on issues that are outside the scope of the interim regulations. We are not addressing these issues in these regulations.

E.O. 12866, Regulatory Review

The Office of Management and Budget has reviewed this rule in accordance with E.O. 12866.

Regulatory Flexibility Act

I certify that these regulations will not have a significant economic impact on a substantial number of small entities because they will apply only to Federal agencies and employees.

List of Subjects in 5 CFR part 550

Administrative practice and procedure, Claims, Government employees, Wages. Office of Personnel Management.

Kay Coles James,
Director.

Accordingly, OPM is adopting the interim regulations amending 5 CFR part 550, published at 67 FR 6640 on February 13, 2002, as final with the following changes:

PART 550—PAY ADMINISTRATION (GENERAL)

Subpart A—Premium Pay

1. The authority citation for part 550, subpart A, continues to read as follows:

Authority: 5 U.S.C. 5304 note, 5305 note, 5541(2)(iv), 5545a(h)(2)(B) and (i), 5548, and 6101(c); sections 407 and 2316, Pub. L. 105–277, 112 Stat. 2681–101 and 2681–828 (5 U.S.C. 5545a); E.O. 12748, 3 CFR, 1992 Comp., p. 316.

2. In § 550.162, paragraph (g) is revised to read as follows:

§ 550.162 Payment provisions.

* * * * *

(g) Notwithstanding paragraph (c)(1) of this section, an agency may continue to pay premium pay under § 550.151 to an employee during a temporary assignment that would not otherwise warrant the payment of AUO pay, if the temporary assignment is directly related to a national emergency declared by the President. An agency may continue to pay premium pay under § 550.151 for not more than 30 consecutive workdays for such a temporary assignment and for a total of not more than 90 workdays in a calendar year while on such a temporary assignment.

[FR Doc. 03–2192 Filed 1–29–03; 8:45 am]
BILLING CODE 6325–39–P

OFFICE OF GOVERNMENT ETHICS

5 CFR Part 2641

RIN 3209–AA07

Post-Employment Conflict of Interest Restrictions; Revision of Departmental Component Designations

AGENCY: Office of Government Ethics (OGE).

ACTION: Final rule.

SUMMARY: The Office of Government Ethics is issuing this rule to designate

several departmental components, to revoke an existing component designation, and to change the names of two existing departmental components, for purposes of the one-year post-employment conflict of interest restriction at 18 U.S.C. 207(c).

EFFECTIVE DATES: This amendatory rule is effective January 30, 2003, except for the removal of the listing for the International Joint Commission, United States and Canada (American Section), as set forth in amendatory instruction 3, which is effective on April 30, 2003.

FOR FURTHER INFORMATION CONTACT: Richard M. Thomas, Associate General Counsel, Office of Government Ethics; telephone: 202–208–8000, extension 1152; TDD: 202–208–8025; FAX: 202–208–8037.

SUPPLEMENTARY INFORMATION:

A. Substantive Discussion

The Director of OGE (Director) is authorized by 18 U.S.C. 207(h) to designate distinct and separate departmental or agency components in the executive branch for purposes of 18 U.S.C. 207(c). The representational bar of 18 U.S.C. 207(c) usually extends to the whole of any department or agency in which a former senior employee served in any capacity during the year prior to termination from a senior employee position. However, eligible senior employees may be permitted to communicate to or appear before parts of their former department or agency if one or more components of the department or agency have been designated as separate agencies or bureaus by OGE.

As specified in 5 CFR 2641.201(e)(3)(iii), the Director of OGE ''shall by rule make or revoke a component designation after considering the recommendation of the designated agency ethics official.'' Component designations are listed in appendix B of 5 CFR part 2641. Pursuant to the procedures prescribed in 5 CFR 2641.201(e), several departments have forwarded letters to OGE recommending the amendment of appendix B since it was last revised in 1999 (64 FR 5709–5710 (February 5, 1999)). After carefully reviewing these recommendations in light of the criteria in 18 U.S.C. 207(h) as implemented in 5 CFR 2641.201(e)(6), the Director has determined to revise appendix B as explained below.

At the recommendation of the Department of Defense (DOD), the Director is designating the National Reconnaissance Office (NRO) as a distinct and separate component of that Department. NRO is charged, under 50 U.S.C. 403–5(b)(3), with responsibility for the ''continued operation of an effective unified organization for the research and development, acquisition, and operation of overhead reconnaissance systems necessary to satisfy the requirements of all elements of the intelligence community.'' NRO is the sole designer, builder and operator of the United States' reconnaissance satellites. According to DOD, NRO was omitted from the Department's original list of recommended components in 1990 because the existence of the NRO was, at that time and for several years thereafter, a highly classified fact. That is no longer the case, and NRO can now be designated as a new component of the DOD.

The Director is also granting the request of the Department of Labor to designate the Office of Disability Employment Policy (ODEP) as a distinct and separate component of that Department. ODEP is a new office established by legislation enacted on December 21, 2000, section 1(a)(1), Pub. L. 106–554, as codified at 29 U.S.C. 557b. The office, which is headed by an Assistant Secretary, is charged to ''provide leadership, develop policy and initiatives, and award grants furthering the objective of eliminating barriers to the training and employment of people with disabilities.'' 29 U.S.C. 557b.

As recommended by the Department of Transportation (DOT), the Director is designating the Federal Motor Carrier Safety Administration (FMCSA) as a distinct and separate component of that Department. The FMCSA commenced operations on January 2, 2000. It was created pursuant to the Motor Carrier Safety Improvement Act of 1999, section 101(a), Pub. L. 106–159, as codified at 49 U.S.C. 113, to perform functions relating to motor carriers and motor carrier safety. These functions were previously performed by DOT's Federal Highway Administration.

Also pursuant to the recommendation of DOT, the Director is designating the Transportation Security Administration (TSA) as a distinct and separate component of that Department. Under the Aviation and Transportation Security Act, section 101(a), Pub. L. 107–71, as codified at 49 U.S.C. 114, TSA was created as an administration of DOT, with the responsibility for civil aviation security as well as the security of other modes of transportation. Although the functions of TSA are expected to be transferred to the new Department of Homeland Security at a later time during 2003, this separate component designation will define the relationship between DOT and TSA with respect to section 207(c) immediately.

As requested by the Department of the Treasury (Treasury), the Director is designating the Financial Crimes Enforcement Network (FinCEN) as a distinct and separate component of that Department. Under 31 U.S.C. 310, FinCEN is designated as a bureau in Treasury to provide trend analysis and threat assessments, regulate financial and other institutions under the Bank Secrecy Act, and foster international cooperation in efforts to deter and detect money laundering.

Additionally, as recommended by the Department of State, the Director is revoking the designation of the International Joint Commission, United States and Canada (American Section) (IJC). Section 207(h) of 18 U.S.C. authorizes the designation of agencies and bureaus ''within'' a department or agency. Although the IJC receives funding from the Department of State and Federal employees serve in its American Section, IJC is not a part of the Department of State. Rather, it is an international organization in which the United States participates. *See, e.g.*, 22 U.S.C. 288 (IJC is among the international organizations in which the United States participates which are entitled to certain privileges, exemptions, and immunities).

Finally, the Department of Health and Human Services (HHS) has advised that the names of two HHS components currently listed in appendix B of part 2641 have been changed. According to HHS, the ''Agency for Health Care Policy and Research'' is now the ''Agency for Healthcare Research and Quality,'' and the ''Health Care Financing Administration'' is now the ''Centers for Medicare and Medicaid Services.'' Accordingly, the Director is amending the HHS listing in appendix B to reflect the current names of these components.

As indicated in 5 CFR 2641.201(e)(4), a designation ''shall be effective as of the effective date of the rule that creates the designation, but shall not be effective as to employees who terminated senior service prior to that date.'' Initial designations were effective as of January 1, 1991. The effective date of subsequent designations is indicated by means of parenthetical entries in appendix B. The new component designations made by this rulemaking document, as well as the component name changes being reflected herein (which do not affect their underlying component designation dates), are effective January 30, 2003. As also provided in 5 CFR 2641.201(e)(4), a revocation is effective 90 days after the

effective date of the rule that revokes the designation. Accordingly, the component designation revocation made in this rulemaking will take effect April 30, 2003. Revocations are not effective as to any individual terminating senior service prior to the expiration of the 90-day period.

B. Matters of Regulatory Procedure

Administrative Procedure Act

Pursuant to 5 U.S.C. 553, as the Director of OGE, I find that good cause exists for waiving the general requirements for notice of proposed rulemaking, opportunity for public comment, and, except as to the component revocation (see the preamble discussion above), a 30-day delayed effective date. It is important and in the public interest that the designation or revocation herein by OGE of the specified separate departmental components, as well as the component name changes, all of which reflect the current organization of the concerned departments and, as to the new component designations, relieve a restriction, be published in the **Federal Register** and take effect as promptly as possible.

Regulatory Flexibility Act

As Director of the Office of Government Ethics, I certify under the Regulatory Flexibility Act (5 U.S.C. chapter 6) that this rule will not have a significant economic impact on a substantial number of small entities because it affects only Federal departments and agencies and current and former Federal employees.

Paperwork Reduction Act

The Paperwork Reduction Act (44 U.S.C. chapter 35) does not apply to this rule because it does not contain information collection requirements that require the approval of the Office of Management and Budget.

Unfunded Mandates Reform Act

For purposes of the Unfunded Mandates Reform Act of 1995 (2 U.S.C. chapter 25, subchapter II), the final rule would not significantly or uniquely affect small governments and would not result in increased expenditures by State, local and tribal governments, in the aggregate, or by the private sector, of $100 million or more (as adjusted for inflation) in any one year.

Congressional Review Act

The Office of Government Ethics has determined that this rulemaking involves a nonmajor rule under the Congressional Review Act (5 U.S.C. chapter 8) and has submitted a report thereon to the U.S. Senate, House of Representatives and General Accounting Office in accordance with the law.

Executive Order 12866

In promulgating this final rule, the Office of Government Ethics has adhered to the regulatory philosophy and the applicable principles of regulation set forth in section 1 of Executive Order 12866, Regulatory Planning and Review. This rule has not been reviewed by the Office of Management and Budget under that Executive order since it deals with agency organization, management, and personnel matters and is not ''significant'' under the order.

Executive Order 12988

As Director of the Office of Government Ethics, I have reviewed this rule in light of section 3 of Executive Order 12988, Civil Justice Reform, and certify that it meets the applicable standards provided therein.

List of Subjects in 5 CFR Part 2641

Conflict of interests, Government employees.

Approved: January 23, 2003.

Amy L. Comstock,

Director, Office of Government Ethics.

Accordingly, for the reasons set forth in the preamble, the Office of Government Ethics is amending 5 CFR part 2641 as follows:

PART 2641—POST-EMPLOYMENT CONFLICT OF INTEREST RESTRICTIONS

1. The authority citation for part 2641 continues to read as follows:

Authority: 5 U.S.C. App. (Ethics in Government Act of 1978); 18 U.S.C. 207; E.O. 12674, 54 FR 15159, 3 CFR, 1989 Comp., p. 215, as modified by E.O. 12731, 55 FR 42547, 3 CFR, 1990 Comp., p. 306.

2. Effective January 30, 2003, appendix B to part 2641 is amended by revising the listings for the Department of Defense, the Department of Health and Human Services, the Department of Labor, the Department of Transportation, and the Department of the Treasury to read as follows:

Appendix B to Part 2641—Agency Components for Purposes of 18 U.S.C. 207(c)

* * * * *

Parent: Department of Defense

Components

Department of the Air Force
Department of the Army
Department of the Navy
Defense Information Systems Agency
Defense Intelligence Agency
Defense Logistics Agency
Defense Threat Reduction Agency (effective February 5, 1999)
National Imagery and Mapping Agency (effective May 16, 1997)
National Reconnaissance Office (effective January 30, 2003)
National Security Agency

Parent: Department of Health and Human Services

Components

Administration on Aging (effective May 16, 1997)
Administration for Children and Families (effective January 28, 1992)
Agency for Healthcare Research and Quality (formerly Agency for Health Care Policy and Research) (effective May 16, 1997)
Agency for Toxic Substances and Disease Registry (effective May 16, 1997)
Centers for Disease Control and Prevention (effective May 16, 1997)
Centers for Medicare and Medicaid Services (formerly Health Care Financing Administration)
Food and Drug Administration
Health Resources and Services Administration (effective May 16, 1997)
Indian Health Service (effective May 16, 1997)
National Institutes of Health (effective May 16, 1997)
Substance Abuse and Mental Health Services Administration (effective May 16, 1997)

* * * * *

Parent: Department of Labor

Components:

Bureau of Labor Statistics
Employment and Training Administration
Employment Standards Administration
Mine Safety and Health Administration
Occupational Safety and Health Administration
Office of Disability Employment Policy (effective January 30, 2003)
Pension and Welfare Benefits Administration (effective May 16, 1997)

* * * * *

Parent: Department of Transportation

Components:

Federal Aviation Administration
Federal Highway Administration
Federal Motor Carrier Safety Administration (effective January 30, 2003)
Federal Railroad Administration
Federal Transit Administration
Maritime Administration
National Highway Traffic Safety Administration
Saint Lawrence Seaway Development Corporation
Surface Transportation Board (effective May 16, 1997)
Transportation Security Administration (effective January 30, 2003)

United States Coast Guard

Parent: Department of the Treasury

Components

Bureau of Alcohol, Tobacco and Firearms
Bureau of Engraving and Printing
Bureau of the Mint
Bureau of the Public Debt
Comptroller of the Currency
Federal Law Enforcement Training Center
Financial Crimes Enforcement Network (FinCEN) (effective January 30, 2003)
Financial Management Service
Internal Revenue Service
Office of Thrift Supervision
United States Customs Service
United States Secret Service

3. Effective April 30, 2003, appendix B to part 2641 is further amended by removing the word and colon ''Components:'' and adding in place thereof the word and colon ''Component:'' in the listing for the Department of State and by removing the ''International Joint Commission, United States and Canada (American Section)'' from that listing.

[FR Doc. 03–2117 Filed 1–29–03; 8:45 am]

BILLING CODE 6345–02–P

DEPARTMENT OF AGRICULTURE

Rural Utilities Service

7 CFR Part 1738

RIN 0572–AB81

Rural Broadband Access Loans and Loan Guarantees

AGENCY: Rural Utilities Service, USDA.

ACTION: Final rule.

SUMMARY: The Rural Utilities Service (RUS) is amending its regulations in order to establish the Rural Broadband Access Loan and Loan Guarantee Program as authorized by the Farm Security and Rural Investment Act of 2002 (Pub. L. 101–171) (2002 Act). Section 6103 of the Farm Security and Rural Investment Act of 2002 amended the Rural Electrification Act of 1936, as amended (RE Act), to add Title VI, Rural Broadband Access, to provide loans and loan guarantees to fund the cost of construction, improvement, or acquisition of facilities and equipment for the provision of broadband service in eligible rural communities. This final rule prescribes the types of loans available, facilities financed, and eligible applicants, as well as minimum credit support requirements to be considered for a loan. In addition, the rule prescribes the process through which RUS will consider applicants under the priority consideration and the state allocations required in Title VI.

EFFECTIVE DATE: This rule is effective January 30, 2003.

FOR FURTHER INFORMATION CONTACT: Roberta D. Purcell, Assistant Administrator, Telecommunications Program, Rural Utilities Service, U.S. Department of Agriculture, 1400 Independence Avenue, SW., STOP 1590, Room 4056, Washington, DC 20250–1590. Telephone number (202) 720–9554, Facsimile (202) 720–0810.

SUPPLEMENTARY INFORMATION:

Notice and Comment

Section 6103(b) of the 2002 Act requires that the regulations necessary to implement the Rural Broadband Access Loan and Loan Guarantee Program are to be promulgated without regard to the notice and comment provisions of 5 U.S.C. 553 or the Statement of Policy of the Secretary of Agriculture, effective July 24, 1971 (36 FR 13804), relating to notices of proposed rulemaking and public participation in rulemaking. Therefore, these regulations are issued as a final rule.

Executive Order 12866

This rule has been determined to be significant for purposes of Executive Order 12866 and, therefore, has been reviewed by the Office of Management and Budget (OMB). In accordance with Executive Order 12866, an Economic Impact Analysis was completed, outlining the costs and benefits of implementing this program in rural America. The complete analysis is available from RUS upon request.

Executive Order 12988

This rule has been reviewed under Executive Order 12988, Civil Justice Reform. RUS has determined that this rule meets the applicable standards provided in section 3 of that Executive Order. In addition, all State and local laws and regulations that are in conflict with this rule will be preempted. No retroactive effect will be given to the rule and, in accordance with section 212(e) of the Department of Agriculture Reorganization Act of 1994 (7 U.S.C. 6912(e)), administrative appeal procedures must be exhausted before an action against the Department or its agencies may be initiated.

Regulatory Flexibility Act Certification

The Regulatory Flexibility Act (5 U.S.C. 601 *et seq.*) is not applicable to this rule because the agency is not required by 5 U.S.C. 553 or any other law to publish a notice of proposed rulemaking for the subject matter of this rule. The RUS broadband program provides loans to borrowers at interest rates and terms that are more favorable than those generally available from the private sector. RUS borrowers, as a result of obtaining federal financing, receive economic benefits that exceed any direct cost associated with complying with RUS regulations and requirements.

Information Collection and Recordkeeping Requirements

Section 1601(c) of the 2002 Act provides that the promulgation of regulations necessary to implement the Rural Broadband Access Loan and Loan Guarantee Program shall be made without regard to chapter 5 of title 44 of the United States Code (the Paperwork Reduction Act).

Catalog of Federal Domestic Assistance

The program described by this rule is listed in the Catalog of Federal Domestic Assistance Programs under No. 10.851, Rural Telephone Loans and Loan Guarantees; No. 10.852, Rural Telephone Bank Loans; and No. 10.857, Rural Broadband Access Loans and Loan Guarantees. This catalog is available on a subscription basis from the Superintendent of Documents, the United States Government Printing Office, Washington, DC 20402. Telephone: (202) 512–1800.

Executive Order 12372

This rule is excluded from the scope of Executive Order 12372, Intergovernmental Consultation, which may require consultation with State and local officials. See the final rule related notice entitled ''Department Programs and Activities Excluded from Executive Order 12372,'' (50 FR 47034).

Unfunded Mandates

This rule contains no Federal mandates (under the regulatory provision of Title II of the Unfunded Mandate Reform Act of 1995) for State, local, and tribal governments or the private sector. Thus, this rule is not subject to the requirements of sections 202 and 205 of the Unfunded Mandate Reform Act of 1995.

National Environmental Policy Act Certification

RUS has determined that this rule will not significantly affect the quality of the human environment as defined by the National Environmental Policy Act of 1969 (42 U.S.C. 4321 *et seq.*). Therefore, this action does not require an environmental impact statement or assessment.

Background

Section 6103 of the 2002 Act amended the RE Act, to add Title VI, Rural Broadband Access, to provide loans and loan guarantees to fund the costs of construction, improvement, or acquisition of facilities and equipment for the provision of broadband service in eligible rural communities. Title VI defines eligible communities and entities, and sets forth the types of loans, as well as a state allocation system and a priority system for consideration of applicants.

Section 6103(b) of the 2002 Act provides that the regulations for this program are exempt from the notice and comment provisions of section 553 of title 5, United States Code (Administrative Procedures Act). RUS held a public meeting on June 27, 2002, in order to obtain background information for consideration in the implementation and administration of the Rural Broadband Access program. There were 22 presenters including lenders, telecommunications and broadband providers, trade associations, and capital market specialists. The presenter's written comments are available on the RUS Web site at *http://www.usda.gov/rus/telecom/publicmeeting/public_meeting.htm.*

RUS considered the oral and written comments of the presenters as well as the Conference Report accompanying the 2002 Act (Report 107–424) to formulate the regulations implementing the Rural Broadband Access Loan and Loan Guarantee Program.

Types of loans. The Rural Broadband Access Loan and Loan Guarantee Program will offer three types of loans: (1) A direct cost-of-money loan, bearing interest at the cost of borrowing to the Department of the Treasury for obligations of comparable maturity; (2) a direct 4 percent loan; and (3) a private lender guaranteed loan.

Eligible entities can apply for a direct cost-of-money loan or a private lender guaranteed loan to provide service in any eligible rural community. Four-percent direct loans will be available only to provide service in the most rural, economically-challenged communities which currently do not have broadband service to residents.

Four-percent direct loans will be available to eligible entities proposing to provide service in communities with no residential broadband service, population of 2,500 or less, and certain density and income requirements. The density requirement is a maximum number of persons per square mile of the applicant's defined service area. The income requirement is the average per capita income in the county containing the applicant's service area as a percent of the national average per capita income. This requirement will be set at a maximum number. The income and density requirements are subject to review and adjustment on an annual basis and will be published in the **Federal Register** at the beginning of each fiscal year.

All the requirements for a 4-percent loan are in place to encourage build out of broadband facilities to the very poor, rural parts of the country. RUS feels that offering a fixed low interest rate program for these areas helps offset the high cost of serving remote areas which require more telecommunications plant per subscriber than the more densely populated communities.

Credit support requirement. At the public hearing on June 27, RUS heard comments from lenders and equity capital specialists on financing broadband infrastructure projects. In all cases, the lender or investor would require the borrower to contribute support to the project, from 35 to 100 percent of the cost of the project. This reflects the risk that lenders and investors perceive to exist in these projects. The contributions can be in the form of assets, cash, or guarantees from parent companies.

RUS believes that prudent lending practice, especially in the current telecommunications environment, dictates a credit support requirement as well. RUS also considered what form of support would be appropriate.

RUS set the requirement at a lower percent than other telecommunications lenders, 20 percent of the requested loan amount. This lower requirement is enhanced by the requirement that certain applicants have, at the time of application, sufficient cash on hand to support operations for one year. This amount can be part of the minimum 20 percent requirement, or if the cash required for one year of operating expenses is in excess of 20 percent of the loan, that cash requirement will be the minimum requirement. RUS set this requirement for start-up broadband operations to assure that they have cash on hand to cover operations until revenues generate sufficient cash flows to pay expenses as they become due.

RUS recognizes that the expenses of an ongoing telecommunications company can be covered through a regular stream of revenues, and therefore the need to have a large amount of cash on hand is unnecessary and imprudent. This requirement may deter operating telecommunications companies with a viable business plan from applying for funds to upgrade facilities for broadband, perhaps denying a rural community of broadband service. Therefore, RUS will waive the minimum cash requirement for an ongoing company that can show positive cash flow for the two calendar years immediately preceding the date of the application.

Priority Consideration. Title VI directs RUS to give priority to eligible rural communities in which broadband service is not available. In addition, following Congressional guidance in the Conference Report accompanying the 2002 Act (H.R. Rpt. 107–424, 107th Cong. 2nd Sess., 579), RUS will evaluate for expedited approval, any completed application which meets the priority criteria and to evaluate the priority classification of applications on hand at least once every three months.

In addition, pursuant to Title VI, RUS will set up a State reserve in which, for the first 6 months of each fiscal year, the available funding for the fiscal year is allocated among the States, territories, and insular possessions based on the number of communities with populations of 2,500 or less in each State, territory, and insular possession in relation to the total number of such communities in the United States, its territories, and insular possessions.

At the same time, RUS did not want completed, feasible applications which did not meet the priority consideration to go unfunded until the end of the fiscal year. Consequently, RUS came up with a priority system which allows for the funding of completed, feasible applications in a timely manner so long as funding is available in the applicant's state reserve or, after April 1 of the fiscal year, the national reserve.

RUS will expedite for consideration for funding, applications proposing to provide service where none is physically available on a first-in, first-out basis. RUS will also give a lesser priority to those areas currently receiving service but (1) at rates that are not comparable to those in neighboring urban and suburban areas or (2) of quality that is considered unsatisfactory due to, among other criteria, data rate restrictions, system latency, or unreliable connections.

One-time priority for pilot program applicants. Language in the Conference Report accompanying the 2002 Act (H.R. Rpt. 107–424, 107th Cong. 2nd Sess., 579), specifically states, ''The Managers expect the RUS to evaluate the priority status of all pending broadband applications as soon as practicable after the date of enactment. Any completed application which meets the priority criteria should be evaluated for expedited approval.''

The pending, unfunded applications received under the broadband pilot program were returned to the applicants as required in the **Federal Register** at 67 FR 3140. Therefore, RUS has given these applicants a 30-day window to reapply under the requirements of this section. Applications which are submitted and determined to be complete within 30 days of publication of this section will be given priority for funding over new applicants under this program. Only completed applications which are technically and economically feasible will be considered for funding.

Availability of broadband service. As state above, Title VI directs RUS to give priority to eligible rural communities in which broadband service is not available. RUS took into consideration its long history in the telecommunications program in setting forth the criteria for determining the availability of broadband service and decided to consider not only whether broadband was physically available but also the quality of any existing broadband service in a community in granting priority status for funding.

RUS will first consider applications proposing to provide service where none is physically available, the ''unserved'' communities.

Second, RUS will consider applications proposing to provide service where rates are not comparable to similar service in urban and suburban areas, or quality of service is not satisfactory, the ''underserved'' communities.

In determining whether broadband service is available, RUS requires the applicant to publish a legal notice stating its intent to provide service in a community and requesting any incumbent provider to submit certain information to RUS including service territory, cost of service, rates of data transmission. RUS understands that this may be Confidential Business Information and will protect the confidentiality of the information.

Acquisitions. Title VI permits the use of loan funds for the acquisition of facilities and equipment for the provision of broadband facilities. However, RUS believes the primary intent of the legislation is to provide funding for broadband deployment in rural communities where residential service is not available. RUS will fund the acquisition of eligible facilities and equipment only if the applicant demonstrates it is necessary and incidental to furnishing or improving rural broadband service and the acquisition is less than 50 percent of the loan amount requested.

Refinancing. Title VI permits RUS to refinance existing RUS telecommunications debt if the use of the proceeds will further the construction, improvement, or acquisition of facilities and equipment for broadband service. RUS will limit the funds lent for refinancing to 40 percent of the total loan amount.

Competition with Existing RUS Telecommunications Borrowers. RUS believes that loan security for an existing telecommunications borrower may be at risk should RUS fund a competing service which could also offer traditional telephone service in addition to broadband service. However, residents in RUS telecommunications borrower service areas should not be denied the opportunity to subscribe to broadband service if the incumbent is not willing to provide the service. RUS will give existing telecommunication borrowers a two-year window in which RUS would not consider applications proposing to offer broadband service in an existing RUS telecommunications borrower's service area if the existing borrower, not later than 90 days after RUS receipt of an application proposing to provide broadband service in the borrower's local exchange service territory, submits to RUS a letter of intent to provide or begin to construct residential broadband service in its local exchange service territory within two years.

The incumbent RUS telecommunications borrower must provide, prior to October 1, 2004, support of its intent through submitting either a loan application to construct broadband facilities to RUS or another lender or proof that construction of broadband facilities has begun. Should the existing telecommunications borrower construct or begin to construct broadband facilities during the two-year window, RUS will not consider any applications proposing to provide competitive broadband service in that incumbent borrower's territory. RUS will monitor the incumbent's compliance with the letter of intent through onsite inspections or any other means necessary. If the borrower is not making satisfactory progress in providing broadband service in its local exchange service territory, RUS will consider applications proposing to provide broadband service in their territory.

This same principle will hold for borrowers under the Rural Broadband Access Loan and Loan Guarantee Program. In order to protect loan security, RUS will not fund applications proposing to construct broadband facilities in communities served by borrowers using funds under this part regardless of the definition used for broadband service at the time of loan approval.

Rate-of-data transmission criteria for defining broadband service. Title VI states that the Secretary shall review and recommend modifications of rate-of-data transmission criteria for purposes of the identification of broadband service technologies. Given the rate of change in technology RUS feels that the rate-of-data transmission criteria may need to be changed within the 6-year time frame of the broadband loan program. Therefore, RUS will publish the criteria in the **Federal Register** at the beginning of each fiscal year. The newly published rate will be the minimum for all new applicants in that fiscal year. Unfunded, complete applications from the previous fiscal year will not be required to meet the new rate-of-data transmission criteria. Those applications will be evaluated for approval on the basis of the criteria in place as of the date of completion.

Conference language also suggests that RUS continue the use of the FCC definition of broadband service, as was used in the pilot program, in order to ''* * * continue the current high standard used by RUS in determining what broadband service is.'' In the broadband pilot program, RUS used the FCC standard for ''advanced telecommunications capability'' as the rate-of-data transmission criteria for broadband. As of the date of publication of this regulation, the FCC uses the term ''advanced telecommunications capability'' to describe services and facilities with an upstream (customer-to-provider) and downstream (provider-to-customer) transmission speed exceeding 200 kilobits per second. RUS will continue to use this current standard for the rate-of-data transmission criteria unless the FCC changes the rate used in ''advanced telecommunications capability''. If FCC changes the rate, RUS will revisit its definition of broadband. RUS recognizes the value of coordinating with other agencies in determining rate-of-data transmission criteria for the purpose of determining broadband, and will continue to do so.

Notice of application deadline. At the beginning of each fiscal year, RUS will publish in the **Federal Register** a Notice of Application Deadline. The notice will cover those items in the regulation which are subject to annual review and change, including loan levels in each type of loan, rate-of-data transmission criteria, density and income requirements for 4-percent direct loans, and the dollar amounts available in each State under the allocation.

List of Subjects in 7 CFR Part 1738

Broadband, Loan programs-communications, Rural areas, Telephone, Telecommunications.

For reasons set out in the preamble, RUS amends chapter XVII of title 7 of the Code of Federal Regulations by adding a new part 1738 to read as follows:

PART 1738—RURAL BROADBAND ACCESS LOANS AND LOAN GUARANTEES

Subpart A—General

Sec.
1738.1 General statement.
1738.2 Definitions.
1738.3—1738.9 [Reserved]

Subpart B—Loan Purposes and Basic Policies

1738.10 General.
1738.11 Availability of broadband service.
1738.12 Location of facilities.
1738.13 Allocation of funds.
1738.14 One-time priority for unfunded applications from the broadband pilot program
1738.15 Priorities.
1738.16 Eligible entities.
1738.17 Civil rights.
1738.18 Minimum and maximum loan amount.
1738.19 Facilities financed.
1738.20 Equity requirement.
1738.21 Interim financing.
1738.22 Loan security.
1738.23—1738.29 [Reserved].

Subpart C—Types of Loans

1738.30 Rural broadband access loans and loan guarantees.
1738.31 Full faith and credit.
1738.32—1738.39 [Reserved]

Subpart D—Terms of Loans

1738.40 General.
1738.41 Payments on loans.
1738.42—1738.49 [Reserved]

Authority: Pub. L. 107–171, 7 U.S.C. 901 *et seq.*

Subpart A—General

§ 1738.1 General statement.

(a) This part sets forth the general policies, types of loans and loan guarantees, and program requirements under the Rural Broadband Access Loan and Loan Guarantee Program to provide funds for the costs of the construction, improvement, and acquisition of facilities and equipment for broadband service in eligible rural communities.

(b) Additional information regarding the Rural Broadband Access Loan and Loan Guarantee Program can be found in RUS Bulletin 1738–1, ''Rural Broadband Access Loan and Loan Guarantee Application Guide'' and RUS Bulletin 1738–2, ''Rural Broadband Access Loan and Loan Guarantee Advance and Construction Procedures Guide''.

(c) When reference is made in this part to existing RUS regulations, an applicant or borrower under this part will follow the requirements applicable to an RUS telecommunications borrower.

§ 1738.2 Definitions.

As used in this part:

Acquisition means the purchase of operating broadband facilities or another broadband system whether by acquiring broadband facilities or equipment, or majority stock interest of one or more organizations.

Administrator means the Administrator of the Rural Utilities Service, or his or her designee.

Affiliate means an organization that directly, or indirectly through one or more intermediaries, controls or is controlled by, or is under common control with, the applicant.

Applicant means an eligible entity requesting approval of a loan or loan guarantee under this part.

Borrower means any organization that has an outstanding loan made or guaranteed by RUS.

Broadband pilot program means that program implemented through Notices of Funds Availability, published in the **Federal Register** at 65 FR 75920 and at 67 FR 3140.

Broadband service means any technology identified by the Administrator as having the capacity to transmit data to enable a subscriber to the service to originate and receive high-quality voice, data, graphics, and video. To qualify as broadband, the project must offer data transmission services, and may provide voice, graphics, video, and other services. At the beginning of each fiscal year, RUS will publish a notice in the **Federal Register** defining the minimum rate-of-data transmission criteria to qualify as broadband service during that fiscal year's funding period.

Composite economic life means the weighted (by dollar amount of each class of facility in the loan) average economic life of all classes of facilities in the loan.

Economic life means the estimated useful service life of an asset as determined by RUS.

Eligible rural community means any incorporated or unincorporated place in the United States, its territories and insular possessions (including any area within the Federated States of Micronesia, the Republic of the Marshall Islands, and the Republic of Palau) that:

(1) Has no more than 20,000 inhabitants based on the most recent available population statistics of the Bureau of the Census and

(2) Is not located in an area designated as a standard metropolitan statistical area. For purposes of this part, ''place'' may include any area located outside the boundaries of any incorporated or unincorporated city, village or borough having a population exceeding 20,000 that is not within an area designated as a standard metropolitan statistical area.

Feasibility study means the pro forma financial analysis prepared by the applicant, and acceptable to RUS, to determine the economic feasibility of a loan.

Fiscal year means the fiscal year of the federal government.

Forecast period means the time period beginning on the date (base date) of the applicant's balance sheet used in preparing the feasibility study and ending on a date equal to the base date plus the number of years estimated in the feasibility study for completion of the construction covered by the loan. Feasibility projections are usually for 5 years.

Initial loan means the first loan made under section 601 of the RE Act to each eligible entity.

Interim construction means the construction, improvement, or acquisition of facilities and equipment prior to loan approval and release of funds.

Interim financing means funding for a project that RUS has acknowledged could be included in a loan prior to approving the loan.

Loan means any loan made or guaranteed under this part by RUS, unless otherwise noted.

Loan contract means the loan agreement between RUS and the borrower, including all amendments thereto.

Loan documents means the loan contract, note, and security instrument between the borrower and RUS and any associated document pertaining to a loan.

Loan funds means funds provided pursuant to a loan made or guaranteed under this part by RUS.

Mortgage means the security document between the borrower, as debtor, and RUS, as creditor, including any amendments and supplements thereto.

Private loan guarantee means a loan made by a non-Federal lender and guaranteed by RUS.

RE Act means the Rural Electrification Act of 1936, as amended (7 U.S.C. 901 *et seq.*).

Release of funds means a determination by RUS that an applicant has complied with all of the conditions

prerequisite to the advance of funds as set forth in the loan contract.

RUS means the Rural Utilities Service, an agency of the United States Department of Agriculture, and successor to the Rural Electrification Administration.

RUS telecommunications borrower means any organization that has an outstanding telecommunications loan made or guaranteed by RUS under Titles II, III, or IV of the RE Act.

Service area means the geographical area within which the applicant proposes to make broadband service available with a loan provided under this part.

Telecommunications means the transmission and reception of voice, data, sounds, signals, pictures, writings, or signs of all kinds, by wire, fiber, radio, light, or other visual or electromagnetic means.

TIER means Times Interest Earned Ratio. TIER is the ratio of an applicant's net income (after taxes) plus interest expense, all divided by interest expense. For the purpose of this calculation, all amounts will be annual figures and interest expense will include only interest on debt with a maturity greater than one year.

§§ 1738.3–1738.9 [Reserved]

Subpart B—Loan Purposes and Basic Policies

§ 1738.10 General.

(a) The purpose of the Rural Broadband Access Loan and Loan Guarantee Program is to provide loans to provide funds, on a technology neutral basis, for the costs of construction, improvement, and acquisition of facilities and equipment for broadband service in eligible rural communities.

(b) The proceeds of any loan made under this part may be used to refinance an outstanding obligation on another telecommunications loan made under the RE Act if the use of the proceeds will further the construction, improvement, or acquisition of facilities in eligible rural communities.

(1) Funds used for refinancing may not constitute more than 40 percent of the loan. The remainder of the proceeds shall only be used for the construction or improvement of facilities and equipment for broadband services.

(2) In calculating the expected composite economic life under § 1738.41 of this part, the economic life of any loan refinanced under this section will be based on the remaining economic life of the assets underlying that loan.

(c) RUS will not assess fees or charges for any loan made under this part.

(d) Loans will only be made under this part if the applicant's financial operations, taking into account the impact of the facilities financed with the proceeds of the loan and the associated debt, are economically feasible, as determined by RUS.

§ 1738.11 Availability of broadband service.

(a) As provided in § 1738.15 of this part, priority will be given to loans to finance service to eligible rural communities in which broadband service is not available to residential customers in the applicant's proposed service area.

(b) RUS shall consider the following criteria in determining whether broadband service is not available to residential customers:

(1) Broadband service is not being provided to residential customers in the applicant's proposed service area and no entity is committed to provide such service before the service would reasonably be expected to be available pursuant to the loan application;

(2) Broadband service is not provided at rates comparable to those of similar services in neighboring urban and suburban areas, as determined by RUS; and

(3) The quality of existing service, including, but not limited to, the availability of specified data rates, system latency, and data rate restrictions, is not satisfactory as determined by RUS.

(c) All applicants, as part of submitting a completed application, shall:

(1) Certify to RUS the extent to which paragraphs (b)(1) through (b)(3) of this section, apply to residential customers in the proposed service area, and

(2) Publish legal notice stating the applicant's intent to offer broadband service in a particular community.

(i) The notice must set forth the applicant's proposed service area, and request any incumbent broadband service provider to submit to RUS within 30 days:

(A) The number of residential customers receiving broadband service in the applicant's proposed service area, the rates of data transmission, and the cost of each level of service, or proof of commitment to provide service in the proposed service area, and

(B) A map of its service territory.

(ii) The notice must satisfy all other requirements to constitute legal notice within the areas proposed to be served.

(iii) The notice must be published in state and local newspapers covering the applicant's proposed service area if such publication is not included in the legal notice requirement.

§ 1738.12 Location of facilities.

RUS will make broadband loans for facilities which RUS determines are necessary to serve subscribers located in eligible rural communities. RUS may determine that it is necessary for facilities financed with loan funds to be located outside of eligible rural communities.

§ 1738.13 Allocation of funds.

(a) On October 1, of each fiscal year, or as soon as possible after funds become available, RUS will:

(1) Establish a national reserve for broadband loans, and

(2) Allocate amounts in the reserve to each State, territory, and insular possession, based on the ratio of the number of communities with a population of 2,500 inhabitants or less in the state, territory, and insular possession to the number of communities with a population of 2,500 inhabitants or less in all states, territories, and insular possessions. Population will be based upon the Bureau of the Census' latest decennial census.

(b) To be considered eligible for funding from the State reserve during the fiscal year, an application, determined by RUS to be complete, must be postmarked no later than January 31 of the fiscal year.

(c) On April 1 of each fiscal year, RUS will return all unobligated amounts in each state's reserve to the national reserve and will make the national reserve available to eligible entities in any state.

(d) To be considered eligible for funding from the national reserve during the current fiscal year, a completed application, satisfactory to RUS, must be postmarked no later than July 31 of the fiscal year.

(e) Completed applications that are economically and technically feasible, as determined by RUS, will be considered for funding in accordance with the priority requirements set forth in § 1738.15 of this part.

§ 1738.14 One-time priority for unfunded applications from the broadband pilot program.

(a) Each application that was submitted and remains unfunded from the broadband pilot program will be given a one-time priority for funding for a loan under this part.

(b) Each applicant will be given 30 days from the date of publication of this part in the **Federal Register** to resubmit

a completed application in accordance with the provisions of this part.

(c) Completed applications submitted within the 30-day time-frame will be considered for financing:

(1) First, where broadband service is not available to residential customers, as set forth in § 1738.11 of this part.

(i) Completed applications will be funded on a first-in, first-out basis, as long as funds remain available in the applicable state's reserve.

(ii) When the state reserve is not adequate to fund the next completed application on a first-in, first-out basis, RUS will consider subsequent completed applications for that state for funding on a first-in, first-out basis. All unfunded, completed applications will be carried forward for consideration for funding from the national reserve.

(2) Second, where broadband service is available to residential customers:

(i) On January 1, 2003, after all new applications submitted under this part proposing to provide service where none is available have been considered under § 1738.15(b) of this part, all completed applications will be considered for funding on a first-in, first-out basis, as long as funds remain available in the applicable state's reserve.

(ii) When the state reserve is not adequate to fund the next completed application on a first-in, first-out basis, RUS will consider subsequent completed applications for that state for funding on a first-in, first-out basis. All unfunded, completed applications will be carried forward for consideration for funding from the national reserve.

§ 1738.15 Priorities.

Subject to the one-time priority set forth in § 1738.14 of this part, in making loans under this part, priority will be given to eligible entities submitting completed applications for the construction, improvement, or acquisition of facilities and equipment for broadband service in eligible rural communities as follows:

(a) As of October 1 of the fiscal year, completed applications remaining unfunded from the previous fiscal year where broadband service is not available to residential customers, as set forth in § 1738.11(b)(1) of this part, will be considered for funding on a first-in, first-out basis, as long as funds remain available in the applicable state's reserve. When the state reserve is not adequate to fund the next completed application on a first-in, first-out basis, RUS will consider subsequent completed applications for that state for funding on a first-in, first-out basis. All unfunded, completed applications will be carried forward for consideration for funding from the national reserve.

(b) New completed applications proposing to provide service where none is available to residential customers, as set forth in § 1738.11 of this part, will be considered for funding, from the state reserve prior to April 1 and the national reserve after April 1, on a first-in, first-out basis, as long as funds remain available. As applications are processed using the first-in, first-out process, RUS may expedite for consideration for funding applications proposing to provide service where none is available, as set forth in § 1738.11(b)(1). When funds are not adequate to fund the next completed application on a first-in, first-out basis, RUS will consider subsequent completed applications for funding on a first-in, first-out basis.

(c) On January 1, March 30, April 1, July 1 and September 30 of the fiscal year, all unfunded, completed applications on hand will be prioritized and considered for funding, from the state reserve prior to April 1 and the national reserve after April 1, as follows:

(1) First, where broadband service is not available to residential customers, as set forth in § 1738.11(b)(1) of this part, on a first-in, first-out basis, as long as funds remain available.

(2) Second, where broadband service is not available to residential customers, as set forth in § 1738.11(b)(2) and (3) of this part, on a first-in, first-out basis, as long as funds remain available.

(3) Third, where broadband service is available to residential customers, on a first-in, first-out basis, so long as funds remain available.

§ 1738.16 Eligible entities.

(a) RUS makes broadband loans to legally organized entities providing, or proposing to provide, broadband services in eligible rural communities.

(1) Types of eligible entities include cooperative, nonprofit, limited dividend or mutual associations, limited liability companies, commercial organizations and Indian tribes and tribal organizations as defined in 25 U.S.C. 450b (b) and (c). Individuals or partnerships of individuals are not eligible entities.

(2) An entity is not eligible if it serves more than 2 percent of the telephone subscriber lines installed in the United States.

(3) To be eligible, an entity must have sufficient authority to enter into a contract with RUS and to carry out the purposes of the proposed loan.

(b) A State or local government, including any agency, subdivision, or instrumentality thereof (including consortia thereof) shall be eligible for a broadband loan only if, not later than April 30, 2003, no other eligible entity is already offering or has committed to offer broadband services to the eligible rural community. RUS will determine whether the commitment is sufficient for purposes of this paragraph.

§ 1738.17 Civil rights.

Applicants are required to comply with certain regulations on nondiscrimination and equal employment opportunity. See RUS Bulletin 1790–1, ''Nondiscrimination Among Beneficiaries of RUS Programs'' and RUS Bulletin 20–15:320–15, ''Equal Employment Opportunity in Construction Financed with RUS Loans''; 7 CFR parts 15 and 15b and 45 CFR part 90.

§ 1738.18 Minimum and maximum loan amount.

Recognizing plant costs, the applicant's cost of system design, and RUS' administrative costs, RUS will not consider applications for loans or loan guarantees of less than $100,000. Maximum loan amounts apply only to an applicant for a direct 4-percent broadband loan, as provided for in § 1738.30(b)(2) of this part.

§ 1738.19 Facilities financed.

(a) RUS makes broadband loans to finance the construction, improvement, and acquisition of facilities and equipment to provide broadband service in eligible rural communities.

(b) RUS makes broadband loans to finance broadband facilities leased under the terms of a capital lease as defined in generally accepted accounting principles. RUS will not make a broadband loan to finance facilities leased under the terms of an operating lease as defined in generally accepted accounting principles.

(c) RUS makes broadband loans to finance an acquisition by an eligible entity only when the acquisition is necessary and incidental to furnishing or improving rural broadband service.

(d) RUS will not approve the use of broadband loans to acquire any stock or any facilities or equipment of an affiliate of the applicant.

(e) RUS will not make a broadband loan to finance the following items:

(1) Customer terminal equipment (including modems) not owned by the applicant during its economic life and any associated inside wiring;

(2) Vehicles not used primarily in construction; and

(3) Operating expenses.

(f) RUS will not make a broadband loan to finance systems or facilities that

have not been designed and constructed to RUS' satisfaction. *See* RUS' Bulletins 1738–1 and 1738–2.

(g) Prior to October 1, 2004, RUS will not make a broadband loan under this part to provide broadband service in an area receiving local exchange telephone service from an RUS telecommunications borrower to any entity other than the incumbent RUS telecommunications borrower if, not later than 90 days after RUS receives an application proposing to provide broadband service in the borrower's local exchange service territory, the incumbent RUS telecommunications borrower submits to RUS a letter of intent to provide or begin to construct residential broadband service in its local exchange service territory prior to October 1, 2004. The incumbent RUS telecommunications borrower must provide, prior to October 1, 2004, support of their intent to provide broadband service through submitting either a loan application to construct broadband facilities or proof that construction of broadband facilities has begun. Thereafter, unless the RUS telecommunications borrower has constructed or begun to construct broadband facilities in its service area, RUS will consider an application for a loan under this part to provide the broadband service in an area served by an RUS telecommunications borrower according to the criteria for determining broadband availability in § 1738.11(b) of this part.

(h) RUS will not approve loans to more than one applicant to provide broadband service within the same eligible rural community, nor to an applicant proposing to provide service in a community served by a borrower using funds under this part regardless of the definition of broadband service at the time of loan approval.

(i) If an unadvanced loan, or a portion thereof, is rescinded, a new loan shall not be made to the same applicant for the same purposes as in the rescinded loan.

§ 1738.20 Credit support requirement.

(a) To be eligible for a loan, RUS will require an applicant to provide credit support in an amount equal to 20 percent of the requested loan amount.

(b) The applicant must have, as part of the minimum 20 percent requirement, cash or, in the case of State and local governments, cash equivalents in an amount equal to operating expenses for the first full year of providing service, as determined by a feasibility study satisfactory to RUS. This cash requirement will be waived for applicants operating as telecommunications companies which have positive cash flow for the two calendar years immediately preceding the date of application.

(c) The remainder of the minimum requirement can be met by undepreciated assets which would normally be financed as part of a loan under this part, additional cash or cash equivalents, licenses, or an unconditional letter of credit, or the equivalent, satisfactory to RUS.

(d) For purposes of this section, assets and licenses will be valued based on the lower of cost or market value, net of liens or other obligations of payments for those assets and licenses.

§ 1738.21 Interim financing.

(a) Upon notification by RUS that an applicant's application is considered complete, the applicant may enter into an interim financing agreement with a lender other than RUS or use its own internally generated funds for interim construction.

(b) For an applicant to preserve the option of obtaining loan funds for reimbursement of interim financing, the following procedures must be followed:

(1) Interim construction shall be conducted in accordance with RUS Bulletin 1738–2 and 7 CFR part 1788, except that the applicant shall not begin interim construction until all necessary licenses, permits, and other governmental approvals have been obtained;

(2) Equal employment opportunity requirements apply to interim construction. See RUS Bulletin 20–15: 320–15; and

(3) Interim construction shall be covered by an Environmental Report prepared in accordance with 7 CFR part 1794 and approved by RUS.

(c) RUS approval of interim financing is not a commitment that RUS will make loan funds available.

§ 1738.22 Loan security.

(a) RUS makes loans only if, in the judgment of the Administrator, the security therefore is reasonably adequate and the loan will be repaid within the time agreed.

(b) RUS generally requires that an applicant provide RUS with a first lien, in form and substance satisfactory to RUS, on all of the applicant's property and such additional security as RUS may require. If necessary, RUS will share in the first lien with another lender provided the RUS loan is adequately secured and will be repaid within the time agreed.

(c) Unless otherwise approved by RUS, the applicant shall purchase and own the collateral for the loan free from liens or security interests, other than those securing the RUS loan.

(d) In the case of loans that include the financing of broadband facilities that do not constitute self-contained operating systems or units, the applicant shall, in addition to the mortgage lien on all of the applicant's facilities financed by RUS, furnish adequate assurance, in the form of contractual or other arrangements, satisfactory to RUS, that continuous and efficient broadband service will be rendered.

(e) Beginning with the first calendar year following the end of the forecast period, RUS will require the recipient of a broadband loan to maintain, at a minimum, a TIER at least equal to the projected TIER determined by the feasibility study prepared in connection with the loan, but at least 1.25 and not greater than 2.0.

(f) Additional financial, investment, operational, and managerial controls appear in the loan documents required by RUS.

§§ 1738.23—1738.29 [Reserved]

Subpart C—Types of Loans

§ 1738.30 Rural broadband access loans and loan guarantees.

(a) Direct cost-of-money broadband loans shall bear interest at a rate (the ''Cost of Money Interest Rate'') equal to the cost of borrowing to the Department of Treasury for obligations of comparable maturity. The Cost of Money Interest Rate will be provided by RUS when the funds are advanced to the borrower.

(b) Direct 4 percent broadband loan.

(1) To be eligible for a direct loan bearing an interest rate of 4 percent, the applicant must be proposing to serve:

(i) A community that:

(A) Has a population of less than 2,500 inhabitants;

(B) Is not currently receiving broadband service as set forth in § 1738.11(b)(1) of this part, and

(C) Is located in a county with per capita personal income that is less than or equal to that percent of the national average per capita personal income which RUS will publish in the **Federal Register** at the beginning of each fiscal year. County per capita personal income as a percent of the national average per capita personal income is published by the Bureau of Economic Analysis, U.S. Department of Commerce, at *http://www.bea.doc.gov/bea/regional/reis/*. RUS will use the most recent statistics published on October 1 of the fiscal year in which the application is deemed complete by RUS; and

(ii) A service area with a certain maximum population density,

calculated as the total number of persons in the service area divided by the square miles of the service area. The maximum population density requirement will be published by RUS in the **Federal Register** at the beginning of each fiscal year.

(2) The total amount of financing made available by RUS, in each fiscal year, for direct loans bearing an interest rate of 4 percent and the maximum of any one loan will be published by RUS in the **Federal Register** at the beginning of each fiscal year.

(3) When an approved application exceeds the maximum amount of 4 percent financing that may be made available to the borrower, a direct loan made at 4 percent may be made simultaneously with a ''Cost-of-Money Interest Rate'' loan.

(4) A 4 percent direct loan may be made simultaneously with a Cost-of-Money Interest Rate loan or a private loan guarantee.

(c) Private loan guarantees. A private loan guarantee shall bear interest at a rate set by the lender consistent with the current applicable market rate for a loan of comparable maturity.

(1) A private loan guarantee is available to any legally organized lending agency which includes commercial banks, trust companies, mortgage banking firms, insurance companies, and any other institutional investor authorized by law to loan money, hereafter referred to as ''lender''. At the time of application, applicants must provide RUS the name of the lender who will be providing the funding and a commitment from that lender to provide the funds.

(i) The lender shall be subject to credit examination and supervision by a Federal or state agency unless RUS determines that alternative examination and supervisory mechanisms are adequate.

(ii) The lender shall demonstrate to RUS the capability to adequately service guaranteed loans. The lender shall also be in good standing with its licensing authority and meet the loan making, loan servicing, and other requirements of the jurisdiction in which the lender makes loans guaranteed under this part.

(2) The lender selected by the borrower shall provide evidence satisfactory to RUS of its qualification under this part, along with the name of the authority that supervises such lender.

(3) The lender may establish charges and fees for the loan provided they are not greater than those normally charged other applicants for the same type of loan in the ordinary course of business. RUS will not guarantee any portion of the loan used to pay lender charges and fees.

(4) Loans are guaranteed for no more than 80 percent of the amount of principal except for those purposes in § 1738.30(c)(3) of this part for which RUS will not provide a guarantee. RUS' guarantee is limited to the loan repayment obligation of the borrower and does not extend to guaranteeing that a lender will remit to a holder loan payments made by the borrower.

(5) The interest rate must be fixed and must be the same for the Guaranteed Loan Amount or the respective Guaranteed Loan Portion Amount or the respective Guaranteed-Amount Equivalent, as the case may be, and Unguaranteed Loan Amount or the respective Unguaranteed Loan Portion Amount or the respective Unguaranteed-Amount Equivalent, as the case may be.

(6) The entire loan will be secured by the same security with equal lien priority for the Guaranteed Loan Amount or the respective Guaranteed Loan Portion Amount or the respective Guaranteed-Amount Equivalent, as the case may be, and Unguaranteed Loan Amount or the respective Unguaranteed Loan Portion Amount or the respective Unguaranteed-Amount Equivalent, as the case may be. The Unguaranteed Loan Amount or the respective Unguaranteed Loan Portion Amount or the respective Unguaranteed-Amount Equivalent, as the case may be, will neither be paid first nor given any preference or priority over the Guaranteed Loan Amount or the respective Guaranteed Loan Portion Amount or the respective Guaranteed-Amount Equivalent, as the case may be.

(7) All loan documents, including, but not limited to, a loan guarantee agreement between RUS and the lender, the loan note guarantee, the guaranteed loan note, and the mortgage will be prepared by RUS. Contact RUS for copies of forms of the loan documents. The guaranteed loan agreement between the borrower and the lender shall be subject to RUS approval.

(8) Once a private loan guarantee is approved, the lender will be required to fully service the loan including:

(i) Determining that all prerequisites to each advance of loan funds by the lender under the terms of the contract of guarantee, all financing documents, and all related security documents have been fulfilled. The lender must obtain RUS approval to advance funds prior to each advance of funds.

(ii) Billing and collecting loan payments from the borrower.

(iii) Notifying the Administrator promptly of any default in the payment of principal and interest on the loan and submit a report, as soon thereafter as possible, setting forth its views as to the reasons for the default, how long it expects the borrower will be in default, and what corrective actions the borrower states it is taking to achieve a current debt service position.

(iv) Notifying the Administrator of any known violations or defaults by the borrower under the lending agreement, contract of guarantee, or related security instruments, or conditions of which the lender is aware which might lead to nonpayment, violation, or other default.

(9) Upon notice to the lender, RUS may assume loan servicing responsibilities for the loan or the Guaranteed Loan Amount or the respective Guaranteed Loan Portion Amount or the respective Guaranteed-Amount Equivalent, as the case may be, or require the lender to assign such responsibilities to a different entity, if the lender fails to perform its loan servicing responsibilities under the loan guarantee agreement, or if the lender becomes insolvent, makes an admission in writing of its inability to pay its debts generally as they become due, or becomes the subject of proceedings commenced under the Bankruptcy Reform Act of 1978 (11 U.S.C. 101 *et seq.*) or any similar applicable Federal or state law, or is no longer in good standing with its licensing authority, or ceases to meet the eligibility requirements of this section. Such negligent servicing is defined as the failure to perform those services which a reasonable prudent lender would perform in servicing its own portfolio of loans that are not guaranteed, and includes not only a failure to act but also not acting in a timely manner.

(10)(i) The Guarantee shall cease to be effective with respect to any Guaranteed Loan Amount or any Guaranteed Loan Portion Amount or any Guaranteed-Amount Equivalent to the extent that:

(A) The Guaranteed Loan Amount or the respective Guaranteed Loan Portion Amount or the respective Guaranteed-Amount Equivalent, as the case may be, is separated at any time from the Unguaranteed Loan Amount or the respective Unguaranteed Loan Portion Amount or the respective Unguaranteed-Amount Equivalent, as the case may be, in any way, directly or through the issuance of any Guaranteed-Amount Equity Derivative or any Guaranteed-Amount Debt Derivative; or

(B) Any holder of the Guaranteed Loan Note or any Guaranteed Loan Portion Note or any Derivative, as the case may be, having a claim to payments on the Guaranteed Loan receives more than its pro-rata percentage of any

payment due to such holder from payments made under the Guarantee at any time during the term of the Guaranteed Loan.

(ii) The assignment by the lender requires prior written approval from RUS.

(iii) The assignment shall entitle the holder to all of the lender's rights. However, the lender shall remain responsible for servicing the entire loan.

(iv) The borrower, its principal officers, members of the borrower's board of directors and members of the immediate families of said officials shall not be a holder of the borrower's loan.

(11) RUS will not guarantee any loan under this subpart that provides for:

(i) A balloon payment of principal or interest at the final maturity date of the loan; or

(ii) The payment of interest on interest.

(12) For purposes of this subsection:

(i) Derivative means any right, interest, instrument or security issued or traded on the credit of the Guaranteed Loan or any Guaranteed Loan Portion, including but not limited to:

(A) Any participation share of, or undivided ownership or other equity interest in, the Guaranteed Loan or any Guaranteed Loan Portion;

(B) Any note, bond or other debt instrument or obligation which is collateralized or otherwise secured by a pledge of, or security interest in, the Guaranteed Loan or any Guaranteed Loan Portion; or

(C) Any such interest in such an interest or any such instrument secured by such an instrument.

(ii) Guaranteed-Amount Debt Derivative means any note, bond or other debt instrument or obligation which is collateralized or otherwise secured by a pledge of, or security interest in, the Guaranteed Loan Note or any Guaranteed Loan Portion Note or any Derivative, as the case may be, which has an exclusive or preferred claim to the Guaranteed Loan Amount or the respective Guaranteed Loan Portion Amount or the respective Guaranteed-Amount Equivalent, as the case may be.

(iii) Guaranteed-Amount Equity Derivative means any participation share of, or undivided ownership or other equity interest in, the Guaranteed Loan or any Guaranteed Loan Portion or any Derivative, as the case may be, which has an exclusive or preferred claim to the Guaranteed Loan Amount or the respective Guaranteed Loan Portion Amount or the respective Guaranteed-Amount Equivalent, as the case may be.

(iv) Guaranteed-Amount Equivalent means:

(A) With respect to any Derivative which is equal in principal amount to the Guaranteed Loan or any Guaranteed Loan Portion, that amount of payment on account of such Derivative which is equal to the Guaranteed Loan Amount or the respective Guaranteed Loan Portion Amount, as the case may be; or

(B) With respect to any Derivatives which in the aggregate are equal in principal amount to the Guaranteed Loan or any Guaranteed Loan Portion, that amount of payment on account of such derivatives which is equal to the Guaranteed Loan Amount or the respective Guaranteed Loan Portion Amount, as the case may be.

(v) Guaranteed Loan Amount means that amount of payment on account of the Guaranteed Loan which is guaranteed under the terms of the Guarantee.

(vi) Guaranteed Loan Portion Amount means that amount of payment on account of any Guaranteed Loan Portion which is guaranteed under the terms of the Guarantee.

(vii) Guaranteed Loan Note means, collectively, the note or notes executed and delivered by the Borrower to evidence the Guaranteed Loan.

(viii) Guaranteed Loan Portion means any portion of the Guaranteed Loan.

(ix) Guaranteed Loan Portion Note means any note executed and delivered by the Borrower to evidence a Guaranteed Loan Portion.

(x) Unguaranteed-amount equivalent means all amounts of payment on account of any Derivative other than the respective Guaranteed-Amount Equivalent.

(xi) Unguaranteed loan amount means all amounts of payment on account of the Guaranteed Loan other than the Guaranteed Amount.

(xii) Unguaranteed loan portion Amount means all amounts of payment on account of any Guaranteed Loan Portion other than the respective Guaranteed Loan Portion Amount.

§ 1738.31 Full faith and credit.

Loan guarantees made under this part are supported by the full faith and credit of the United States.

§§ 1738.32—1738.39 [Reserved]

Subpart D—Terms of Loans

§ 1738.40 General.

Terms and conditions of loans are set forth in a mortgage, note, and loan contract. Provisions of the mortgage and loan contract are implemented by provisions in RUS bulletins and regulations. Standard forms of the mortgage, note, and loan contract can be obtained from RUS. However, RUS reserves the right to establish terms and conditions, including security requirements, on a case-by-case basis.

§ 1738.41 Payments on loans.

(a) Broadband loans must be repaid with interest within a period that, rounded to the nearest whole year, equals the expected composite economic life of the facilities to be financed, as calculated by RUS.

(1) The expected composite economic life shall be based upon the depreciation rates for the facilities financed by the loan.

(2) The depreciation rates used shall be the rates currently in place, as long as RUS finds them to be reasonable for the telecommunications industry.

(b) Applicants may request a repayment period that is shorter than the expected composite economic life of the facilities financed. A shorter period may be approved as long as the Administrator determines that the loan remains feasible.

(c) Interest is payable on funds advanced each month as it accrues beginning with the first billing after the advance, as defined in the note. Principal payments on each note are scheduled to begin one year after the date of the first advance. After this deferral period, interest and principal payments on all funds advanced during this one-year period shall be made in equal monthly installments. Principal payments on funds advanced 1 year or more after the date of the first advance will begin with the first billing after the advance. The interest and principal payments on each of these advances shall be made in equal monthly installments.

§§ 1738.42—1738.49 [Reserved]

Dated: January 27, 2003.

Hilda Gay Legg,

Administrator, Rural Utilities Service.

[FR Doc. 03–2199 Filed 1–29–03; 8:45 am]

BILLING CODE 3410–15–P

DEPARTMENT OF COMMERCE

National Institute of Standards and Technology

15 CFR Part 270

[Docket No: 021224331–2331–01]

RIN 0693–AB52

Procedures for Implementation of the National Construction Safety Team Act

AGENCY: National Institute of Standards and Technology, United States Department of Commerce.

ACTION: Interim final rule; request for comments.

SUMMARY: The Director of the National Institute of Standards and Technology (NIST), Technology Administration, United States Department of Commerce, requests comments on an interim final rule pertaining to the implementation of the National Construction Safety Team Act (''Act''). This interim final rule with a request for public comments contains general provisions regarding implementation of the Act and establishes procedures for the collection and preservation of evidence obtained and the protection of information created as part of investigations conducted pursuant to the Act.

DATES: This rule is effective on January 30, 2003. Comments must be received no later than March 3, 2003.

ADDRESSES: Comments on the interim final rule must be submitted to: Dr. James E. Hill, Deputy Director, Building and Fire Research Laboratory, National Institute of Standards and Technology, Mail Stop 8600, Gaithersburg, MD 20899–8600, telephone number (301) 975–5900.

FOR FURTHER INFORMATION CONTACT: Dr. James E. Hill, Deputy Director, Building and Fire Research Laboratory, National Institute of Standards and Technology, Mail Stop 8600, Gaithersburg, MD 20899–8600, telephone number (301) 975–5900.

SUPPLEMENTARY INFORMATION:

Background

The National Construction Safety Team Act, Pub. L. 107–231, was enacted to provide for the establishment of investigative teams (''Teams'') to assess building performance and emergency response and evacuation procedures in the wake of any building failure that has resulted in substantial loss of life or that posed significant potential of substantial loss of life. The purpose of investigations by Teams is to improve the safety and structural integrity of buildings in the United States. A Team will (1) Establish the likely technical cause or causes of the building failure; (2) evaluate the technical aspects of evacuation and emergency response procedures; (3) recommend, as necessary, specific improvements to building standards, codes, and practices based on the findings made pursuant to (1) and (2); and recommend any research and other appropriate actions needed to improve the structural safety of buildings, and improve evacuation and emergency response procedures, based on the findings of the investigation. Section 2(c)(1) of the Act requires that the Director develop procedures for certain activities to be carried out under the Act as follows: Regarding conflicts of interest related to service on a Team; defining the circumstances under which the Director will establish and deploy a Team; prescribing the appropriate size of Teams; guiding the disclosure of information under section 7 of the Act; guiding the conduct of investigations under the Act; identifying and prescribing appropriate conditions for provision by the Director of additional resources and services Teams may need; to ensure that investigations under the Act do not impede and are coordinated with any search and rescue efforts being undertaken at the site of the building failure; for regular briefings of the public on the status of the investigative proceedings and findings; guiding the Teams in moving and preserving evidence; providing for coordination with Federal, State, and local entities that may sponsor research or investigations of building failures; and regarding other issues.

NIST plans to publish two separate documents in the **Federal Register** regarding procedures to implement the Act. This interim final rule with a request for public comments contains general provisions regarding implementation of the Act and establishes procedures for the collection and preservation of evidence obtained and the protection of information created as part of investigations conducted pursuant to the Act, including guiding the disclosure of information under section 7 of the Act (§§ 270.350, 270.351, and 270.352) and guiding the Teams in moving and preserving evidence (§ 270.330). These general provisions and procedures, which will comprise Subparts A and D of the rule, are necessary to the conduct of the investigation of the World Trade Center disaster, already underway, and are effective immediately. At a later date, NIST plans to publish in the **Federal Register** a notice of proposed rulemaking and request for comments, establishing the remaining procedures necessary for implementation of the Act.

Request for Public Comment: Persons interested in commenting on the interim final rule should submit their comments in writing to the above address. All comments received in response to this notice will become part of the public record and will be available for inspection and copying at the Department of Commerce Central Reference and Records Inspection facility, room 6228, Hoover Building, Washington, DC 20230.

Additional Information

Executive Order 12866

This rule has been determined not to be significant under section 3(f) of Executive Order 12866.

Executive Order 12612

This rule does not contain policies with Federalism implications sufficient to warrant preparation of a Federalism assessment under Executive Order 12612.

Administrative Procedure Act

Prior notice and an opportunity for public comment are not required for this rule of agency organization, procedure, or practice. 5 U.S.C. 553(b)(A).

Regulatory Flexibility Act

Because notice and comment are not required under 5 U.S.C. 553, or any other law, the analytical requirements of the Regulatory Flexibility Act (5 U.S.C. 601 *et seq.*) are inapplicable. As such, a regulatory flexibility analysis is not required, and none has been prepared.

Paperwork Reduction Act

Notwithstanding any other provision of the law, no person is required to, nor shall any person be subject to penalty for failure to comply with, a collection of information, subject to the requirements of the Paperwork Reduction Act, unless that collection of information displays a currently valid OMB Control Number.

There are no collections of information involved in this rulemaking.

National Environmental Policy Act

This rule will not significantly affect the quality of the human environment. Therefore, an environmental assessment or Environmental Impact Statement is not required to be prepared under the National Environmental Policy Act of 1969.

List of Subjects in 15 CFR Part 270

Administrative practice and procedure; Buildings and facilities; Disaster assistance; Evidence; Investigations; National Institute of Standards and Technology; Science and technology; Subpoena.

Dated: January 23, 2003.

Karen H. Brown,

Deputy Director.

For reasons set forth in the preamble, the National Institute of Standards and Technology amends 15 CFR chapter II to add a new Subchapter G, part 270, as follows:

Subchapter G—National Construction Safety Teams

PART 270—NATIONAL CONSTRUCTION SAFETY TEAMS

Subpart A—General

Sec.
270.1 Description of rule; purpose; applicability.
270.2 Definitions used in this subpart.

Subpart B—[Reserved]

Subpart C—[Reserved]

Subpart D—Collection and Preservation of Evidence; Information Created Pursuant to an Investigation; and Protection of Information

270.300 Scope.
270.301 Policy.

Collection of Evidence

270.310 Evidence collected by investigation participants who are not NIST employees.
270.311 Collection of evidence.
270.312 Voluntary submission of evidence.
270.313 Requests for evidence.
270.314 Negotiations.
270.315 Subpoenas.
270.316 Public hearings.

Entry and Inspection

270.320 Entry and inspection of site where a building failure has occurred.
270.321 Entry and inspection of property where building components, materials, artifacts, and records with respect to a building failure are located.
270.322 Voluntary permission to enter and inspect property where building components, materials, artifacts, and records with respect to a building failure are located.
270.323 Requests for permission to enter and inspect property where building components, materials, artifacts, and records with respect to a building failure are located.
270.324 Negotiations.
270.325 Notice of authority to enter and inspect property where building components, materials, artifacts, and records with respect to a building failure are located.

Preservation of Evidence

270.330 Moving and preserving evidence.

Information Created Pursuant to an Investigation

270.340 Information created by investigation participants who are not NIST employees.

Protection of Information

270.350 Freedom of Information Act.
270.351 Protection of voluntarily submitted information.
270.352 Public safety information

Authority: Pub. L. 107–231, 116 Stat. 1471 (15 U.S.C. 3701 note).

Subpart A—General

§ 270.1 Description of rule; purpose; applicability.

(a) The National Construction Safety Team Act (the Act) (Pub. L. 107–231) provides for the establishment of investigative teams to assess building performance and emergency response and evacuation procedures in the wake of any building failure that has resulted in substantial loss of life or that posed significant potential of substantial loss of life.

(b) The purpose of investigations by Teams is to improve the safety and structural integrity of buildings in the United States.

(c) This part is applicable to the establishment and deployment of Teams and the conduct of investigations under the Act.

§ 270.2 Definitions used in this part.

The following definitions are applicable to this part:

Act. The National Construction Safety Team Act (Pub. L. 107–231, 116 Stat. 1471).

Advisory Committee. The National Construction Safety Team Advisory Committee.

Credentials. Photo identification issued by a Federal or state government entity.

Director. The Director of the National Institute of Standards and Technology.

Evidence. Any document, record, book, artifact, building component, material, witness testimony, or physical evidence collected pursuant to an investigation.

General Counsel. The General Counsel of the U.S. Department of Commerce.

Investigation participant. Any person participating in an investigation under the Act, including all Team members, other NIST employees participating in the investigation, private sector experts, university experts, representatives of professional organizations, employees of other Federal, state, or local government entities, and other contractors.

Lead Investigator. A Team member who is a NIST employee and is designated by the Director to lead a Team.

Team. A team established by the Director and deployed to conduct an investigation under the Act.

NIST. The National Institute of Standards and Technology.

Subpart B—[Reserved]

Subpart C—[Reserved]

Subpart D—Collection and Preservation of Evidence; Information Created Pursuant to an Investigation; and Protection of Information

§ 270.300 Scope.

During the course of an investigation conducted pursuant to the Act, evidence will be collected, and information will be created by the Team, NIST, and other investigation participants. This subpart sets forth the policy and procedures for the collection, preservation, and protection of evidence obtained and information created pursuant to an investigation.

§ 270.301 Policy.

Evidence collected and information created by Team members and all other investigation participants will be collected, preserved, and protected in accordance with the procedures set forth in this subpart.

Collection of Evidence

§ 270.310 Evidence collected by investigation participants who are not NIST employees.

Upon receipt of information pursuant to an investigation under the Act, each investigation participant who is not a NIST employee shall:

(a) As soon as practicable, transfer the original evidence to NIST, and retain a copy of the evidence only if necessary to carry out their duties under the investigation; and

(b) For any evidence that cannot reasonably be duplicated, retain the evidence in accordance with NIST procedures for preserving evidence as described in § 270.330 of this subpart, and upon completion of the duties for which retention of the evidence is necessary, transfer the evidence to NIST.

§ 270.311 Collection of evidence.

(a) In the course of an investigation, evidence normally will be collected following the procedures described in §§ 270.312 through 270.315 of this subpart.

(b) Upon a written showing by the Lead Investigator of urgent and

compelling reasons to believe that evidence may be destroyed, or that a witness may become unavailable, were the procedures described in §§ 270.312 through 270.314 of this subpart followed, the Director, with the concurrence of the General Counsel, may immediately issue a subpoena for such evidence or testimony, pursuant to § 270.315 of this subpart.

§ 270.312 Voluntary submission of evidence.

After the Director establishes and deploys a Team, members of the public are encouraged to voluntarily submit to the Team non-privileged evidence that is relevant to the subject matter of the pending investigation. Confidential information will only be accepted pursuant to an appropriate nondisclosure agreement.

§ 270.313 Requests for evidence.

(a) After the Director establishes and deploys a Team, the Lead Investigator, or their designee, may request the testimony of any person by deposition, upon oral examination or written questions, and may request documents or other physical evidence without seeking prior approval of the Director.

(b) Requests for responses to written questions will be made in writing and shall include:

(1) A statement that the request is made to gather evidence necessary to an investigation being conducted under the Act;

(2) Identification of the person whose responses are sought;

(3) Contact information for the person to whom the responses should be submitted;

(4) The date and time by which the responses are requested;

(5) A statement that the questions for which responses are sought are attached; and

(6) Contact information for the person to whom questions or problems regarding the request should be addressed.

(c) Requests for documents or other physical evidence will be made in writing and shall include:

(1) A statement that the request is made to gather evidence necessary to an investigation being conducted under the Act;

(2) A description of the documents or other physical evidence sought;

(3) Identification of the person or persons to whom the request is made;

(4) A request that each person to whom the request is directed produce and permit inspection and copying of the documents and physical evidence in the possession, custody, or control of that person at a specific time and place; and

(5) Contact information for the person to whom questions or problems regarding the request should be addressed.

(d) Requests for witness testimony will be made in writing and shall include:

(1) The name of the person whose testimony is requested;

(2) The date, time, and place of the deposition;

(3) A statement that the person whose testimony is requested may be accompanied by an attorney; and

(4) Contact information for the person to whom questions or problems regarding the request should be addressed.

§ 270.314 Negotiations.

The Lead Investigator may enter into discussions with appropriate parties to address problems identified with the submission of evidence requested pursuant to § 270.312 of this subpart. Should negotiations fail to result in the submission of such evidence, a subpoena may be issued pursuant to § 270.315.

§ 270.315 Subpoenas.

(a) *General.* Subpoenas requiring the attendance of witnesses or the production of documentary or physical evidence for the purpose of taking depositions or at a hearing may be issued only under the signature of the Director with the concurrence of the General Counsel, but may be served by any person designated by the Director.

(b) *Determination whether to issue a subpoena.* In determining whether to issue a subpoena, the Director will consider the following factors:

(1) Whether the testimony, documentary, or physical evidence is required for an investigation being conducted pursuant to the Act;

(2) Whether the evidence sought is relevant to the purpose of the investigation;

(3) Whether NIST already has the evidence in its possession; and

(4) Whether the evidence required is described with specificity.

(c) *Contents of a subpoena.* A subpoena issued by the Director will contain the following:

(1) A statement that the subpoena is issued by the Director pursuant to section 5 of the Act;

(2) A description of the documents or physical evidence or the subject matter of the testimony required by the subpoena;

(3) A command that each person to whom it is directed attend and give testimony or produce and permit inspection and copying of designated books, documents or physical evidence in the possession, custody or control of that person at a time and place specified in the subpoena;

(4) A statement that any person whose testimony is required by the subpoena may be accompanied by an attorney; and

(5) The signature of the Director.

(d) *Service of a subpoena.* Service of a subpoena will be effected:

(1) By personal service upon the person or agent of the person whose testimony is required or who is in charge of the documentary or physical evidence required; or

(2) By certified mail or delivery to the last known residence or business address of such person or agent; or

(3) Where personal service, mailing, or delivery has been unsuccessful, service may also be effected by publication in the **Federal Register**.

(e) *Witness fees.* Witnesses will be entitled to the same fees and mileage as are paid to witnesses in the courts of the United States.

(f) *Failure to obey a subpoena.* If a person disobeys a subpoena issued by the Director under the Act, the Attorney General, acting on behalf of the Director, may bring civil action in a district court of the United States to enforce the subpoena. The court may punish a failure to obey an order of the court to comply with the subpoena as a contempt of court.

§ 270.316 Public hearings.

(a) During the course of an investigation by a Team, if the Director considers it to be in the public interest, NIST may hold a public hearing for the purposes of gathering testimony from witnesses and informing the public on the progress of the investigation.

(b) Should NIST plan to hold a public hearing, NIST will publish a notice in the **Federal Register**, setting forth the date, time, and place of the hearing, and procedures for members of the public wishing to speak at the hearing. In addition, witnesses may be subpoenaed to provide testimony at a public hearing, in accordance with § 270.315 of this subpart.

(c) The Director, or his designee, will preside over any public hearing held pursuant to this section.

Entry and Inspection

§ 270.320 Entry and inspection of site where a building failure has occurred.

When the Director establishes and deploys a Team, the Team members will be issued notices of inspection authority

to enter and inspect the site where the building failure has occurred.

§ 270.321 Entry and inspection of property where building components, materials, artifacts, and records with respect to a building failure are located.

(a) In the course of an investigation, entry and inspection of property where building components, materials, artifacts and records with respect to a building failure are located normally will be conducted following the procedures described in §§ 270.322 through 270.325 of this subpart.

(b) Upon a written showing by the Lead Investigator of urgent and compelling reasons to believe that building components, materials, artifacts or records located on a particular property may be destroyed were the procedures described in §§ 270.322 through 270.324 of this subpart followed, the Director, with the concurrence of the General Counsel may immediately issue a notice of inspection authority for such property, pursuant to § 270.325 of this subpart.

§ 270.322 Voluntary permission to enter and inspect property where building components, materials, artifacts, and records with respect to a building failure are located.

After the Director establishes and deploys a Team, members of the public are encouraged to voluntarily permit Team members to enter property where building components, materials, artifacts, and records with respect to the building failure are located, and take action necessary, appropriate, and reasonable in light of the nature of the property to be inspected and to carry out the duties of the Team.

§ 270.323 Requests for permission to enter and inspect property where building components, materials, artifacts, and records with respect to a building failure are located.

(a) After the Director establishes and deploys a Team, the Lead Investigator or their designee may request permission to enter and inspect property where building components, materials, artifacts, and records with respect to a building failure are located, and take action necessary, appropriate, and reasonable in light of the nature of the property to be inspected and to carry out the duties of the Team.

(b) Requests for permission to enter and inspect such property will be made in writing and shall include:

(1) The name and title of the building owner, operator, or agent in charge of the building;

(2) If appropriate, the name of the building to be inspected;

(3) The address of the building to be inspected;

(4) The date and time of the inspection;

(5) If appropriate, a description of particular items to be inspected; and

(6) Contact information for the person to whom questions or problems regarding the request should be addressed.

§ 270.324 Negotiations.

The Lead Investigator may enter into discussions with appropriate parties to address problems identified with the goal of obtaining the permission requested pursuant to § 270.323 of this subpart.

§ 270.325 Notice of authority to enter and inspect property where building components, materials, artifacts, and records with respect to a building failure are located.

(a) *General.* In investigating a building failure pursuant to the Act, any member of a Team, or any other person authorized by the Director to support a Team, on display of written notice of inspection authority provided by the Director with concurrence of the General Counsel and appropriate credentials, may

(1) Enter property where a building failure being investigated has occurred, or where building components, materials, and artifacts with respect to the building failure are located, and take action necessary, appropriate, and reasonable in light of the nature of the property to be inspected and to carry out the duties of the Team;

(2) During reasonable hours, inspect any record (including any design, construction, or maintenance record), process, or facility related to the investigation;

(3) Inspect and test any building components, materials, and artifacts related to the building failure; and

(4) Move any record, component, material and artifact as provided by this part.

(b) *Conduct of inspection, test, or other action.* An inspection, test, or other action taken by a Team pursuant to section 4 of the Act will be conducted in a way that does not interfere unnecessarily with services provided by the owner or operator of the building components, materials, or artifacts, property, records, process, or facility, and to the maximum extent feasible, preserves evidence related to the building failure, consistent with the ongoing needs of the investigation.

(c) *Determination whether to issue a notice of inspection authority.* In determining whether to issue a notice of inspection authority, the Director will consider whether the specific entry and inspection is reasonable and necessary for the Team to carry out its duties under the Act.

(d) *Notice of inspection authority.* Notice of inspection authority will be made in writing and shall include:

(1) A statement that the notice of inspection authority is issued pursuant to section 4 of the Act;

(2) The name and title of the building owner, operator, or agent in charge of the building;

(3) If appropriate, the name of the building to be inspected;

(4) The address of the building to be inspected;

(5) The date and time of the inspection;

(6) If appropriate, a description of particular items to be inspected; and

(7) The signature of the Director.

(e) *Refusal of entry on to property.* If upon being presented with a notice of inspection by any member of a Team, or any other person authorized by the Director, the owner, operator, or agent in charge of the building or property being inspected refuses to allow entry or inspection, the Director may seek the assistance of the Department of Justice to obtain a warrant or other authorized judicial order enabling entry on to the property.

Preservation of Evidence

§ 270.330 Moving and preserving evidence.

(a) A Team and NIST will take all necessary steps in moving and preserving evidence obtained during the course of an investigation under the Act to ensure that such evidence is preserved.

(b) In collecting and preserving evidence in the course of an investigation under the Act, a Team and NIST will:

(1) Maintain records to ensure that each piece of evidence is identified as to its source;

(2) Maintain and document an appropriate chain of custody for each piece of evidence;

(3) Use appropriate means to preserve each piece of evidence; and

(4) Ensure that each piece of evidence is kept in a suitably secure facility.

(c) If a Federal law enforcement agency suspects and notifies the Director that a building failure being investigated by a Team under the Act may have been caused by a criminal act, the Team, in consultation with the Federal law enforcement agency, will take necessary actions to ensure that evidence of the criminal act is preserved

and that the original evidence or copies, as appropriate, are turned over to the appropriate law enforcement authorities.

Information Created Pursuant to an Investigation

§ 270.340 Information created by investigation participants who are not NIST employees.

Unless requested sooner by the Lead Investigator, at the conclusion of an investigation, each investigation participant who is not a NIST employee shall transfer any original information they created pursuant to the investigation to NIST. An investigation participant may retain a copy of the information for their records but may not use the information for purposes other than the investigation, nor may they release, reproduce, distribute, or publish any information first developed pursuant to the investigation, nor authorize others to do so, without the written permission of the Director or their designee. Pursuant to 15 U.S.C. 281a, no such information may be admitted or used as evidence in any suit or action for damages arising out of any matter related to the investigation.

Protection of Information

§ 270.350 Freedom of Information Act.

As permitted by section 7(b) of the Act, the following information will not be released:

(a) Information described by section 552(b) of Title 5, United States Code, or protected from disclosure by any other law of the United States; and

(b) Copies of evidence collected, information created, or other investigation documents submitted or received by NIST, a Team, or any other investigation participant, until the final investigation report is issued.

§ 270.351 Protection of voluntarily submitted information.

Notwithstanding any other provision of law, a Team, NIST, any investigation participant, and any agency receiving information from a Team, NIST, or any other investigation participant, will not disclose voluntarily provided safety-related information if that information is not directly related to the building failure being investigated and the Director finds that the disclosure of the information would inhibit the voluntary provision of that type of information.

§ 270.352 Public safety information.

A Team, NIST, and any other investigation participant will not publicly release any information it receives in the course of an investigation under the Act if the Director finds that the disclosure might jeopardize public safety.

[FR Doc. 03–2084 Filed 1–29–03; 8:45 am]

BILLING CODE 3510–13–P

CONSUMER PRODUCT SAFETY COMMISSION

16 CFR Part 1500

Exemptions From Classification as Banned Hazardous Substances; Exemption for Certain Model Rocket Propellant Devices for Use With Rocket-Powered Model Cars

AGENCY: Consumer Product Safety Commission.

ACTION: Final rule.

SUMMARY: The Commission is issuing a rule to exempt from the Federal Hazardous Substances Act (''FHSA'') certain model rocket propellant devices for vehicles that travel on the ground. The Commission's current regulations exempt motors used for flyable model rockets. The rule exempts certain propellant devices for rocket-powered model cars if they meet requirements similar to those required for flyable model rockets and additional requirements to avoid possible injuries if the cars are operated off of their tether.

DATES: The rule becomes effective on January 30, 2003.

FOR FURTHER INFORMATION CONTACT: James G. Joholske, Office of Compliance, Consumer Product Safety Commission, Washington, DC 20207; telephone (301) 504–0608 ext. 1419.

SUPPLEMENTARY INFORMATION:

A. Background

Section 2(q)(1)(A) of the FHSA bans toys that are or contain hazardous substances that are accessible to a child. 15 U.S.C. 1261(q)(1)(A). However, the FHSA authorizes the Commission, by regulation, to grant exemptions from classifications as banned hazardous substances for:

> articles, such as chemistry sets, which by reason of their functional purpose require the inclusion of the hazardous substance involved, or necessarily present an electrical, mechanical, or thermal hazard, and which bear labeling giving adequate directions and warnings for safe use and are intended for use by children who have attained sufficient maturity, and may reasonably be expected to read and heed such directions and warnings.

15 U.S.C. 1261(q)(1)(A). Thus, the Commission may issue an exemption if it finds that the product requires inclusion of a hazardous substance in order for it to function, has sufficient directions and warnings, and is intended for children who are old enough to read and follow the directions and warnings. *Id.* The Food and Drug Administration, which administered the FHSA before the Commission was established, issued a rule under this authority that exempted from the definition of banned hazardous substances model rocket propellant devices (motors) designed for use in light-weight, recoverable, and reflyable model rockets, if they meet certain requirements. 16 CFR 1500.85(a)(8).

B. The Petition

The Commission received a petition from Centuri Corporation (''Centuri'') requesting that the Commission issue a rule exempting certain model rocket propellant devices to be used for model cars that travel on the ground along a tethered line and are propelled in a manner similar to flyable rockets. The petitioner requested an exemption that would allow the sale of both of its two prototype rocket-powered model cars. The smaller car, named ''Blurzz,'' uses an ''A'' motor, and is shaped like a ''rail,'' a type of custom-made vehicle used in competitive drag racing. The larger prototype, named ''Screamin' Eagle,'' uses a ''D'' motor, and is shaped like a ''Bonneville Speed Record'' custom vehicle. The Commission decided to grant the petition in part and propose an exemption for model rocket propellant devices to be used for rocket-powered model cars like the smaller ''Blurzz'' car only.[1]

C. The Proposed Exemption

On January 30, 2002, the Commission published a notice of proposed rulemaking (''NPR'') proposing to exempt model rocket propellant devices for use with smaller rocket-powered model cars like the ''Blurzz.'' 67 FR 4373. As explained in the NPR, the Commission concluded that due to the weight, speed and the height it can reach, the larger ''Screamin' Eagle'' posed a significant risk of injury to any person downrange from it when it is used in the absence of the tether. The Commission, therefore, denied the petition insofar as it requested an exemption from the FHSA for model rocket propellant devices for cars like the ''Screamin' Eagle.'' However, the Commission concluded that when the smaller ''Blurzz'' car was ignited

[1] The Commission voted 2–1 to grant the petition with regard to the smaller vehicles and deny it regarding the larger ones. Commissioners Thomas Moore and Mary Sheila Gall voted to take this action. Then-Chairman Ann Brown voted to deny the entire petition.

without the tether, it ordinarily simply flipped onto its back and skittered around on the ground or traveled downrange only a very limited distance, and rose only a few inches in the air, before flipping onto its back. Thus, the Commission concluded that there is a reasonable probability that model rocket propellant devices for rocket-powered model cars like the ''Blurzz'' present no unreasonable risk of injury even when operated in reasonably foreseeable misuse without the tether. The Commission also preliminarily found that children interested in model rockets and rocket-powered model cars such as the ''Blurzz'' are of sufficient maturity that they may reasonably be expected to read and heed the directions for use and warnings that accompany model cars like the ''Blurzz.'' The Commission also preliminarily found that those directions and warnings are adequate to guide users in the safe use of the product.

D. Comments on the NPR

The Commission received three comments on the NPR from Centuri, Intertek Testing Services (''Intertek''), and the National Association of Rocketry (''NAR''). Centuri commented on some of the technical statements in the staff's memos that were part of the briefing package concerning Centuri's petition. The comment from Intertek was actually test results submitted by Centuri. Intertek suggested enlarging the safety alert symbol that appears in directions for the model car. Commission staff agrees that the entire warning label should be larger. NAR agreed with the Commission that the exemption should be limited to smaller ''A'' motors.

E. The Final Rule

When reviewing data for the petition, the Commission's Directorate for Epidemiology found two deaths over a 20-year period involving model airplanes (both involved adult males, 40 and 44 years of age). Centuri provided additional information about these. In one incident, the plane weighed about 5 pounds (compared to 2.7 oz. for a size ''A'' rocket-powered model car), and was traveling at an estimated 200 mph (compared to the top speed of 28 mph for the size ''A'' car). Centuri characterized the airplane in the other incident as ''quite large and heavy.'' The staff reviewed data available after the petition briefing package (for the period May 26, 2001 to April 15, 2002) and found no deaths that could be considered comparable to deaths that might involve rocket-powered model cars.

The Commission's Human Factors staff reviewed revised instructions submitted by Centuri and concluded that the revisions were an improvement over previous instructions and would make them easier for users age 10 and up to follow.

The Commission's Engineering staff reviewed results of testing from Intertek. Intertek was primarily concerned with the dangers of launching the engine alone without the vehicle. Because such motors are currently available with other exempted products, the staff does not believe that exempting rocket-powered model cars creates or increases the hazard of igniting motors outside the vehicles. Intertek was also concerned about launching cars from a ramp or vertical support. However, the Engineering staff believes such operation would be similar to launching a model rocket, and injury data do not suggest a problem with model rockets in those types of launches.

The Commission's staff was concerned about possible injuries if rocket powered cars are operated off the tether. As discussed above, when the ''Blurzz'' was used without the tether it traveled only a limited distance a few inches off the ground and then flipped on its back. Such performance is not likely to injure operators or bystanders. However, Compliance staff was concerned that in the future a company may develop a rocket-powered model car that when operated off the tether could obtain sufficient height, distance and force to injure operators or bystanders. Thus, the final rule contains a limitation that vehicles must be designed so that they either cannot operate off of a track or line (*i.e.*, tether), or if operated off the tether the vehicle will be unstable and will not travel in a guided fashion, so that the car will not strike operators or bystanders. The Commission reminds manufacturers that under section 15 of the Consumer Product Safety Act they have an obligation to report to the Commission if they have information which reasonably supports the conclusion that their product creates an unreasonable risk of serious injury or death or contains a defect which could create a substantial product hazard. 15 U.S.C. 2064(b)(2) & (3). The Commission has the authority to pursue corrective action regarding any toy or other children's article that creates a substantial risk of injury to children. 15 U.S.C. 1274(c)(1).

A small change was made to the final rule in order to correct a cross reference that conflicted with the characteristics of an A motor described in section 1500.85(a)(14)(i)(B) of the rule and to include appropriate provisions of the cross-reference in the rule itself.

F. Effective Date

This rule exempts certain model rocket propellant devices for rocket-powered model cars that would otherwise be banned under the FHSA. Because the rule grants an exemption, it is not subject to the requirement under the Administrative Procedure Act (''APA'') that a rule must be published 30 days before it takes effect. 5 U.S.C 553(d)(1). The rule lifts an existing restriction and allows a product not previously permitted. Thus, the Commission believes it is appropriate for the rule to become effective upon publication in the **Federal Register**.

G. Impact on Small Business

The NPR discussed the Commission's assessment of the impact that a rule to exempt propellant devices for use with small rocket-powered model cars like the ''Blurzz'' might have on small businesses. Because the exemption would relieve manufacturers from existing restrictions, the Commission concluded that the proposed exemption would not have a significant impact on a substantial number of small businesses or other small entities. No comments or additional information alter that conclusion.

H. Environmental Considerations

Pursuant to the National Environmental Policy Act, and in accordance with the Council on Environmental Quality regulations and CPSC procedures for environmental review, the Commission assessed the possible environmental effects associated with the proposed exemption. As discussed in the NPR, the Commission concluded that the rule would have no adverse effect on the environment, and therefore, neither an environmental assessment nor an environmental impact statement is required.

I. Executive Orders

According to Executive Order 12988 (February 5, 1996), agencies must state in clear language the preemptive effect, if any, of new regulations.

The FHSA provides that, generally, if the Commission issues a rule under section 2(q) of the FHSA to protect against a risk of illness or injury associated with a hazardous substance, ''no State or political subdivision of a State may establish or continue in effect a requirement applicable to such substance and designed to protect against the same risk of illness or injury unless such requirement is identical to

the requirement established under such regulations.'' 15 U.S.C. 1261n(b)(1)(B). (The FHSA also provides for the state or political subdivision of a state to apply for an exemption from preemption if certain requirements are met.) Thus, the rule exempting model rocket propellant devices for use with certain surface vehicles will preempt non-identical requirements for such propellant devices.

The Commission has also evaluated the rule in light of the principles stated in Executive Order 13132 concerning federalism, even though that Order does not apply to independent regulatory agencies such as CPSC. The Commission does not expect that the rule will have any substantial direct effects on the States, the relationship between the national government and the States, or the distribution of power and responsibilities among various levels of government.

List of Subjects in 16 CFR Part 1500

Consumer protection, Hazardous materials, Hazardous substances, Imports, Infants and children, Labeling, Law enforcement, Toys.

Conclusion

For the reasons stated above, the Commission concludes that, with the requirements stated in the exemption, model rocket propellant devices to propel small rocket-powered cars like the ''Blurzz'' require inclusion of a hazardous substance in order to function, have sufficient directions and warnings for safe use, and are intended for children who are mature enough that they may reasonably be expected to read and heed the directions and warnings. Therefore, the Commission amends title 16 of the Code of Federal Regulations as follows:

PART 1500—HAZARDOUS SUBSTANCES AND ARTICLES: ADMINISTRATION AND ENFORCEMENT REGULATIONS

1. The authority for part 1500 continues to read as follows:

Authority: 15 U.S.C. 1261–1278.

2. Section 1500.85 is amended by adding a new paragraph (a)(14) to read as follows:

§ 1500.85 Exemptions from classification as banned hazardous substances.

(a) * * *

(14) Model rocket propellant devices (model rocket motors) designed to propel rocket-powered model cars, provided—

(i) Such devices:

(A) Are designed to be ignited electrically and are intended to be operated from a minimum distance of 15 feet (4.6 m) away;

(B) Contain no more than 4 g. of propellant material and produce no more than 2.5 Newton-seconds of total impulse with a thrust duration not less than 0.050 seconds;

(C) Are constructed such that all the chemical ingredients are pre-loaded into a cylindrical paper or similarly constructed non-metallic tube that will not fragment into sharp, hard pieces;

(D) Are designed so that they will not burst under normal conditions of use, are incapable of spontaneous ignition, and do not contain any type of explosive or pyrotechnic warhead other than a small recovery system activation charge;

(E) Bear labeling, including labeling that the devices are intended for use by persons age 12 and older, and include instructions providing adequate warnings and instructions for safe use; and

(F) Comply with the requirements of 16 CFR 1500.83(a)(36)(ii and iii); and

(ii) The surface vehicles intended for use with such devices:

(A) Are lightweight, weighing no more than 3.0 oz. (85 grams), and constructed mainly of materials such as balsa wood or plastics that will not fragment into sharp, hard pieces;

(B) Are designed to utilize a braking system such as a parachute or shock absorbing stopping mechanism;

(C) Are designed so that they cannot accept propellant devices measuring larger than 0.5″ (13 mm) in diameter and 1.75″ (44 mm) in length;

(D) Are designed so that the engine mount is permanently attached by the manufacturer to a track or track line that controls the vehicle's direction for the duration of its movement;

(E) Are not designed to carry any type of explosive or pyrotechnic material other than the model rocket motor used for primary propulsion;

(F) Bear labeling and include instructions providing adequate warnings and instructions for safe use; and

(G) Are designed to operate on a track or line that controls the vehicles' direction for the duration of their movement and either cannot operate off the track or line or, if operated off the track or line, are unstable and fail to operate in a guided fashion so that they will not strike the operator or bystanders.

* * * * *

3. Section 1500.83(a)(36)(i) is revised to read as follows:

§ 1500.83 Exemptions for small packages, minor hazards, and special circumstances.

(a) * * *

(36) * * *

(i) The devices are designed and constructed in accordance with the specifications in § 1500.85(a)(8), (9) or (14);

* * * * *

Dated: January 27, 2003.

Todd Stevenson,

Secretary, Consumer Product Safety Commission.

Appendix to Preamble—List of Relevant Documents

1. Briefing memorandum from Terrance R. Karels, Directorate for Economic Analysis, to the Commission, ''Exemption from Classification as Banned Hazardous Substances Rocket-powered Model Cars, January 13, 2003.
2. Memorandum from Joyce McDonald, Hazard Analysis Division, to Terrance R. Karels, ''Model Rocket Car Petition,'' October 18, 2002.
3. Memorandum from Sharon R. White, Directorate for Engineering Sciences, Division of Human Factors, to Terrance R. Karels, ''Responses to Comments on Briefing Package concerning Centuri Corporation's Petition for Exemption of Model Rocket Propellant Devices for Surface Vehicles, HP 01–02,'' September 6, 2002.
4. Memorandum from Troy W. Whitfield, Directorate for Engineering Sciences, to Terrance R. Karels, ''Rocket Powered Model Cars—Public Comment,'' September 12, 2002.
5. Memorandum from Terrance R. Karels, Directorate for Economic Analysis, to Files, ''Rocket powered cars,'' May 8, 2002.
6. Memorandum from Terrance R. Karels, Directorate for Economic Analysis, to Patricia M. Pollitzer, Office of General Counsel, ''Rocket-powered Model Cars—Economic Considerations,'' December 20, 2002.
7. Memorandum from Jason R. Goldsmith, Ph.D., Division of Health Sciences, to Terrance R. Karels, ''Rocket-Powered Model Cars—Response to Comments,'' October 17, 2002.

[FR Doc. 03–2205 Filed 1–29–03; 8:45 am]

BILLING CODE 6355–01–P

TENNESSEE VALLEY AUTHORITY

18 CFR Part 1301

Revision of Tennessee Valley Authority Freedom of Information Act Regulations

AGENCY: Tennessee Valley Authority (TVA).

ACTION: Final rule.

SUMMARY: The Tennessee Valley Authority is amending its Freedom of

Information Act (FOIA) regulations to reflect a change in the cut-off date for determining which records are responsive to a request.

EFFECTIVE DATE: January 30, 2003.

FOR FURTHER INFORMATION CONTACT: Denise Smith, FOIA Officer, Tennessee Valley Authority, 400 W. Summit Hill Drive (ET 5D), Knoxville, Tennessee 37902–1499, telephone number (865) 632–6945.

SUPPLEMENTARY INFORMATION: This rule was not published in proposed form since it relates to agency procedure and practice. Since this rule is nonsubstantive, it is being made effective January 30, 2003.

List of Subjects in 18 CFR Part 1301

Freedom of Information, Government in the Sunshine, Privacy

For the reasons stated in the preamble, TVA amends 18 CFR part 1301 as follows:

PART 1301—PROCEDURES

1. The authority citation for part 1301, Subpart A, continues to read as follows:

Authority: 16 U.S.C. 831–831ee, 5 U.S.C. 552.

2. In § 1301.4, revise paragraph (a) to read as follows:

§ 1301.4 Responsibility for responding to requests.

(a) TVA's FOIA Officer, or the FOIA Officer's designee, is responsible for responding to all FOIA requests. In determining which records are responsive to a request, TVA will ordinarily include only records in its possession as of the date it begins its search for them. If any other date is used, the FOIA Officer shall inform the requester of that date.

* * * * *

Tracy S. Williams,

Vice President, External Communications, Tennessee Valley Authority.

[FR Doc. 03–2178 Filed 1–29–03; 8:45 am]

BILLING CODE 8120–08–M

SOCIAL SECURITY ADMINISTRATION

20 CFR Part 404

[Reg. No. 4]

RIN 0960–AE03

Changes in the Retirement Age

AGENCY: Social Security Administration.

ACTION: Final rules.

SUMMARY: These final rules amend our regulations to reflect the changes in full retirement age and in monthly benefit reduction for early retirement as established by section 201 of the Social Security Amendments of 1983 (the 1983 Amendments), and the change in delayed retirement credits (DRCs) as established by section 4 of the Senior Citizens' Freedom to Work Act of 2000 (the Freedom to Work Act). Section 201 of the 1983 Amendments gradually increases the full retirement age for unreduced old-age, wife's or husband's, and widow's or widower's benefits from age 65 to age 67. Section 201 provides for an additional reduction in old-age and wife's or husband's benefits when early retirement is elected more than 36 months prior to full retirement age. It also requires a different method of computing the amount of reduction for early retirement for widow's or widower's benefits. Section 4 of the Freedom to Work Act allows a beneficiary who has attained full retirement age to voluntarily suspend retirement benefits to earn DRCs.

EFFECTIVE DATE: These rules are effective January 30, 2003.

FOR FURTHER INFORMATION CONTACT: Bill Hilton, Social Insurance Specialist, Office of Program Benefits, Social Security Administration, 6401 Security Boulevard, Baltimore, MD 21235–6401, (410) 965–2468 or TTY (410) 966–5609. For information on eligibility, filing for benefits, or coverage of earnings, call our national toll-free number, 1–800–772–1213 or TTY at 1–800–325–0778.

SUPPLEMENTARY INFORMATION: Section 201 of the 1983 Amendments changed the age at which unreduced old-age benefits, wife's or husband's benefits, and widow's or widower's benefits are payable from age 65 to age 67. The change is phased in over a period of 22 years. This increase affects those born after January 1, 1938.

Section 201 also changed the way reduced monthly benefits are computed for early retirement. The reduction factor for early retirement of the worker and wife or husband will remain the same as under the pre-amendment law for the first 36 months of the reduction period. For each month in excess of 36 months there will be an additional reduction of 5/12 of one percent. The maximum reduction increases to 30 percent for old-age benefits and 35 percent for wife's or husband's benefits.

The maximum reduction for widow's or widower's benefits will continue to be 28½ percent, but that reduction is prorated over a period of months equal to the total possible months of early retirement. That total is now 60 months for those with a full retirement age of 65 but will increase incrementally to 84 months for those with a full retirement age of 67.

Section 4 of the Freedom to Work Act allows people who have attained full retirement age and are receiving retirement benefits to voluntarily suspend those benefits in order to earn DRCs.

Explanation of Changes

We are adding new § 404.409 to our regulations to explain the effect of section 201 of the 1983 Amendments. This new section shows the full range of dates of birth and the corresponding full retirement ages (the age at which a person can retire and receive unreduced old-age, wife's, husband's, widow's or widower's benefits).

We are revising §§ 404.315, 404.316 and 404.321 to reflect the change in full retirement age mandated by section 201 of the 1983 Amendments.

We are revising § 404.277 to reflect the change in full retirement age as mandated by section 201 of the 1983 Amendments. We are rewriting this section in plain language format to comply with the provisions of Executive Order 12866, as amended by Executive Order 13258. We are correcting this section to show that automatic cost-of-living adjustments now occur in December.

We are revising § 404.304 to reflect the change in full retirement age as mandated by section 201 of the 1983 Amendments. We are rewriting this section in plain language format to comply with the provisions of Executive Order 12866, as amended by Executive Order 13258. We are correcting language in this section to say that benefits may be reduced because of the receipt of a government pension instead of saying that benefits will be reduced. This allows for the exceptions that sometimes occur. We are removing the incorrect language that indicated the benefit will be reduced by the amount of the pension.

We are revising § 404.313 to reflect the change in full retirement age mandated by section 201 of the 1983 Amendments. We are including a section to explain that delayed retirement credits may now be earned by a voluntary suspension of benefits as provided for in section 4 of the Freedom To Work Act. We are rewriting the section in plain language format to comply with the provisions of Executive Order 12866, as amended by Executive Order 13258.

We are revising § 404.317 to reflect the change in full retirement age as mandated by section 201 of the 1983 Amendments. We are rewriting this section in plain language format to

comply with the provisions of Executive Order 12866, as amended by Executive Order 13258. We are correcting the age at which the receipt of workers' compensation or public disability benefits no longer affect the disability benefit from age 62 to age 65.

We are revising § 404.352 to reflect the change in full retirement age as mandated by section 201 of the 1983 Amendments. We are rewriting this section in plain language format to comply with the provisions of Executive Order 12866, as amended by Executive Order 13258. We are expanding the explanation of when benefits end.

We are revising § 404.410 to reflect the change in full retirement age as mandated by section 201 of the 1983 Amendments. We are rewriting this section in plain language format to comply with the provisions of Executive Order 12866, as amended by Executive Order 13258. We are adding an explanation that benefits to a widow or widower based on disability before age 60 are reduced only for months before full retirement age because the disabled widow or widower is deemed to be age 60.

We are revising §§ 404.201, 404.310, 404.311, 404.312, 404.335, 404.336, 404.337, 404.338, 404.411, 404.412, 404.413, 404.421, 404.621 and 404.623 to reflect the change in full retirement age mandated by section 201 of the 1983 Amendments. We are rewriting these entire sections in plain language format to comply with the provisions of Executive Order 12866, as amended by Executive Order 13258.

Regulatory Procedure

Pursuant to section 702(a)(5) of the Social Security Act, 42 U.S.C. 902(a)(5), we follow the Administrative Procedure Act (APA) rulemaking procedures specified in 5 U.S.C. 553 when developing our regulations. The APA provides exceptions to its notice and comment procedures when an agency finds there is good cause for dispensing with such procedures on the basis that they are impracticable, unnecessary, or contrary to the public interest. We have determined that under 5 U.S.C. 553(b)(B), good cause exists for dispensing with the notice and public comment procedures for these rules. Good cause exists because these regulations simply reflect statutory changes and do not involve the making of any discretionary policy. Therefore, we have determined that opportunity for prior comment is unnecessary and we are issuing these changes to our regulations as final rules.

In addition, we find good cause for dispensing with the 30-day delay in the effective date of a substantive rule, provided by 5 U.S.C. 553(d). As explained above, these regulations merely reflect self-executing statutory changes that have their own effective dates. We believe it would be misleading and contrary to the public interest for the regulations to show a later effective date, because we must compute benefits as directed by the statute in all cases.

Executive Order 12866, as Amended by Executive Order 13258

We have consulted with the Office of Management and Budget (OMB) and determined that these final rules do not meet the criteria for a significant regulatory action under Executive Order 12866, as amended by Executive Order 13258. Thus, they were not subject to OMB review.

Paperwork Reduction Act

These final regulations impose no additional reporting or recordkeeping requirements requiring OMB clearance.

Regulatory Flexibility Act

We certify that these final regulations will not have a significant economic impact on a substantial number of small entities because they affect only individuals. Therefore, a regulatory flexibility analysis as provided in the Regulatory Flexibility Act, as amended, is not required.

(Catalog of Federal Domestic Assistance Program Nos. 96.001, Social Security—Disability Insurance; 96.002, Social Security—Retirement Insurance; and 96.004, Social Security-Survivors Insurance)

List of Subjects in 20 CFR Part 404

Administrative practice and procedure, Blind, Disability benefits, Old-age, Survivors and disability insurance, Reporting and recordkeeping requirements, Social Security.

Dated: January 21, 2003.

Jo Anne B. Barnhart,

Commissioner of Social Security.

For the reasons set out in the preamble, we are amending subparts C, D, E, and G of part 404 of chapter III of title 20 of the Code of Federal Regulations as set forth below:

PART 404—FEDERAL OLD-AGE, SURVIVORS AND DISABILITY INSURANCE (1950–)

Subpart C—[Amended]

1. The authority citation for subpart C of part 404 continues to read as follows:

Authority: Secs. 202(a), 205(a), 215, and 702(a)(5) of the Social Security Act (42 U.S.C. 402(a), 405(a), 415, and 902(a)(5)).

2. Section 404.201 is revised to read as follows:

§ 404.201 What is included in this subpart?

In this subpart we describe how we compute your primary insurance amount (PIA), how and when we will recalculate or recompute your PIA to include credit for additional earnings, and how we automatically adjust your PIA to reflect changes in the cost of living.

(a) *What is my primary insurance amount?* Your primary insurance amount (PIA) is the basic figure we use to determine the monthly benefit amount payable to you and your family. For example, if you retire in the month you attain full retirement age (as defined in § 404.409) or if you become disabled, you will be entitled to a monthly benefit equal to your PIA. If you retire prior to full retirement age your monthly benefit will be reduced as explained in §§ 404.410—404.413. Benefits to other members of your family are a specified percentage of your PIA as explained in subpart D. Total benefits to your family are subject to a maximum as explained in § 404.403.

(b) *How is this subpart organized?* (1) In §§ 404.201 through 404.204, we explain some introductory matters.

(2) In §§ 404.210 through 404.213, we describe the average-indexed-monthly-earnings method we use to compute the primary insurance amount (PIA) for workers who attain age 62 (or become disabled or die before age 62) after 1978.

(3) In §§ 404.220 through 404.222, we describe the average-monthly-wage method we use to compute the PIA for workers who attain age 62 (or become disabled or die before age 62) before 1979.

(4) In §§ 404.230 through 404.233, we describe the guaranteed alternative method we use to compute the PIA for people who attain age 62 after 1978 but before 1984.

(5) In §§ 404.240 through 404.243, we describe the old-start method we use to compute the PIA for those who had all or substantially all of their social security covered earnings before 1951.

(6) In §§ 404.250 through 404.252, we describe special rules we use to compute the PIA for a worker who previously had a period of disability.

(7) In §§ 404.260 through 404.261, we describe how we compute the special minimum PIA for long-term, low-paid workers.

(8) In §§ 404.270 through 404.278, we describe how we automatically increase your PIA because of increases in the cost of living.

(9) In §§ 404.280 through 404.288, we describe how and when we will recompute your PIA to include additional earnings which were not used in the original computation.

(10) In § 404.290 we describe how and when we will recalculate your PIA.

(11) Appendices I–VII contain material such as figures and formulas that we use to compute PIAs.

3. Section 404.277 is revised to read as follows:

§ 404.277 When does the frozen minimum primary insurance amount increase because of cost-of-living adjustments?

(a) *What is the frozen minimum primary insurance amount (PIA)?* The frozen minimum is a minimum PIA for certain workers whose benefits are computed under the average-indexed-monthly-earnings method. Section 404.210(a) with § 404.212(e) explains when the frozen minimum applies.

(b) *When does the frozen minimum primary insurance amount (PIA) increase automatically?* The frozen minimum PIA increases automatically in every year in which you or your dependents or survivors are entitled to benefits and a cost-of-living increase applies.

(c) *When are automatic increases effective for old-age or disability benefits based on a frozen minimum primary insurance amount (PIA)?* Automatic cost-of-living increases apply to your frozen minimum PIA beginning with the earliest of:

(1) December of the year you become entitled to benefits and receive at least a partial benefit;

(2) December of the year you reach full retirement age (as defined in § 404.409) if you are entitled to benefits in or before the month you attain full retirement age, regardless of whether you receive at least a partial benefit; or

(3) December of the year you become entitled to benefits if that is after you attain full retirement age.

(d) *When are automatic increases effective for survivor benefits based on a frozen minimum primary insurance amount (PIA)?* (1) Automatic cost-of-living increases apply to the frozen minimum PIA used to determine survivor benefits in December of any year in which your child(ren), your surviving spouse caring for your child(ren), or your parent(s), are entitled to survivor benefits for at least one month.

(2) Automatic cost-of-living increases apply beginning with December of the earlier of:

(i) The year in which your surviving spouse or surviving divorced spouse (as defined in §§ 404.335 and 404.336) has attained full retirement age (as defined in § 404.409) and receives at least a partial benefit, or

(ii) The year in which your surviving spouse or surviving disabled spouse becomes entitled to benefits and receives at least a partial benefit.

(3) Automatic cost-of-living increases are not applied to the frozen minimum PIA in any year in which no survivor of yours is entitled to benefits on your social security record.

Subpart D—[Amended]

4. The authority citation for subpart D of part 404 continues to read as follows:

Authority: Secs. 202, 203(a) and (b), 205(a), 216, 223, 225, 228(a)–(e), and 702(a)(5) of the Social Security Act (42 U.S.C. 402, 403(a) and (b), 405(a), 416, 423, 425, 428(a)–(e), and 902(a)(5)).

5. Section 404.304 is revised to read as follows:

§ 404.304 What are the general rules on benefit amounts?

This subpart describes how we determine the highest monthly benefit amount you ordinarily could qualify for under each type of benefit. However, the highest monthly benefit amount you could qualify for may not be the amount you will be paid. In a particular month, your benefit amount may be reduced or not paid at all. Under some circumstances, your benefit amount may be increased. The most common reasons for a change in your benefit amount are listed below.

(a) *Age.* Sections 404.410 through 404.413 explain how your old-age, wife's or husband's, or widow's or widower's benefits may be reduced if you choose to receive them before you attain full retirement age (as defined in § 404.409).

(b) *Earnings.* Sections 404.415 through 404.418 explain how deductions will be made from your benefits if your earnings or the insured person's earnings go over certain limits.

(c) *Overpayments and Underpayments.* Your benefits may be increased or decreased to make up for any previous overpayment or underpayment made on the insured person's record. For more information about this, see subpart F of this part.

(d) *Family Maximum.* Sections 404.403 through 404.406 explain that there is a maximum amount payable on each insured person's earnings record. If you are entitled to benefits as the insured's dependent or survivor, your benefits may be reduced to keep total benefits payable to the insured's family within these limits.

(e) *Government Pension Offset.* If you are entitled to wife's, husband's, widow's, widower's, mother's or father's benefits and receive a Government pension for work that was not covered under social security, your monthly benefits may be reduced because of that pension. Special age 72 payments may also be reduced because of a Government pension. For more information about this, see § 404.408a which covers reductions for Government pensions and § 404.384(c) which covers special age 72 payments.

(f) *Rounding.* After all other deductions or reductions, we reduce any monthly benefit that is not a multiple of $1 to the next lower multiple of $1.

6. 404.310 is revised to read as follows:

§ 404.310 When am I entitled to old-age benefits?

We will find you entitled to old-age benefits if you meet the following three conditions:

(a) You are at least 62 years old;

(b) You have enough social security earnings to be fully insured as defined in §§ 404.110 through 404.115; and

(c) You apply; or you are entitled to disability benefits up to the month you attain full retirement age (as defined in § 404.409). When you attain full retirement age, your disability benefits automatically become old-age benefits.

7. Section 404.311 is revised to read as follows:

§ 404.311 When does my entitlement to old-age benefits begin and end?

(a) We will find you entitled to old-age benefits beginning with:

(1) If you have attained full retirement age (as defined in § 404.409), the first month covered by your application *in* which you meet all requirements for entitlement; or

(2) If you have attained age 62, but have not attained full retirement age (as defined in § 404.409), the first month covered by your application *throughout* which you meet all requirements for entitlement.

(b) We will find your entitlement to old-age benefits ends with the month before the month you die.

8. Section 404.312 is revised to read as follows:

§ 404.312 How is my old-age benefit amount calculated?

(a) If your old-age benefits begin in the month you attain full retirement age (as defined in § 404.409), your monthly benefit is equal to the primary insurance amount (as explained in subpart C of this part).

(b) If your old-age benefits begin after the month you attain full retirement age, your monthly benefit is your primary insurance amount plus an increase for retiring after full retirement age. See § 404.313 for a description of these increases.

(c) If your old-age benefits begin before the month you attain full retirement age, your monthly benefit amount is the primary insurance amount minus a reduction for each month you are entitled before you attain full retirement age. These reductions are described in §§ 404.410 through 404.413.

9. Section 404.313 is revised to read as follows:

§ 404.313 What are delayed retirement credits and how do they increase my old-age benefit amount?

(a) *What are delayed retirement credits and how do I earn them?* Delayed retirement credits (DRCs) are credits we use to increase the amount of your old-age benefit amount. You may earn a credit for each month during the period beginning with the month you attain full retirement age (as defined in § 404.409) and ending with the month you attain age 70 (72 before 1984). You earn a credit for each month for which you are fully insured and eligible but do not receive an old-age benefit either because you do not apply for benefits or because you elect to voluntarily suspend your benefits to earn DRCs. Even if you were entitled to old-age benefits before full retirement age you may still earn DRCs for months during the period from full retirement age to age 70, if you voluntarily elect to suspend those benefits.

(b) *How is the amount of the increase because of delayed retirement credits computed?* (1) *Computation of the increase amount.* The amount of the increase depends on your date of birth and the number of credits you earn. We total the number of credits (which need not be consecutive) and multiply that number by the applicable percentage from paragraph (b)(2) of this section. We then multiply the result by your benefit amount and round the answer to the next lower multiple of 10 cents (if the answer is not already a multiple of 10 cents). We add the result to your benefit amount. If a supplementary medical insurance premium is involved it is then deducted. The result is rounded to the next lower multiple of $1 (if the answer is not already a multiple of $1).

(2) *Credit Percentages.* The applicable credit amount for each month of delayed retirement can be found in the table below.

If your date of birth is:	The credit for each month you delay retirement is:
Before 1/2/1917	1/12 of 1%
1/2/1917—1/1/1925 ...	1/4 of 1%
1/2/1925—1/1/1927 ...	7/24 of 1%
1/2/1927—1/1/1929 ...	1/3 of 1%
1/2/1929—1/1/1931 ...	3/8 of 1%
1/2/1931—1/1/1933 ...	5/12 of 1%
1/2/1933—1/1/1935 ...	11/24 of 1%
1/2/1935—1/1/1937 ...	1/2 of 1%
1/2/1937—1/1/1939 ...	13/24 of 1%
1/2/1939—1/1/1941 ...	7/12 of 1%
1/2/1941—1/1/1943 ...	5/8 of 1%
After 1/1/1943	2/3 of 1%

Example: Alan was qualified for old-age benefits when he reached age 65 on January 15, 1998. He decided not to apply for old-age benefits immediately because he was still working. When he became age 66 in January 1999, he stopped working and applied for benefits beginning with that month. Based on his earnings, his primary insurance amount was $782.60. However, because he did not receive benefits immediately upon attainment of full retirement age (65), he is due an increase based on his delayed retirement credits. He earned 12 credits, one for each month from January 1998 through December 1998. Based on his date of birth of 1/15/1933 he is entitled to a credit of 11/24 of one percent for each month of delayed retirement. 12 credits multiplied by 11/24 of one percent equals a credit of 5.5 percent. 5.5% of the primary insurance amount of $782.60 is $43.04 which is rounded to $43.00, the next lower multiple of 10 cents. $43.00 is added to the primary insurance amount, $782.60. The result, $825.60 is the monthly benefit amount. If a supplementary medical insurance premium is involved it is then deducted. The result is rounded to the next lower multiple of $1 (if the answer is not already a multiple of $1).

(c) *When is the increase because of delayed retirement credits effective?*—(1) *Credits earned after entitlement and before the year of attainment of age 70.* If you are entitled to benefits, we examine our records after the end of each calendar year to determine whether you have earned delayed retirement credits during the previous year for months when you were at or over full retirement age and you were fully insured and eligible for benefits but did not receive them. Any increase in your benefit amount is effective beginning with January of the year after the year the credits were earned.

(2) *Credits earned after entitlement in the year of attainment of age 70.* If you are entitled to benefits in the month you attain age 70, we examine our records to determine if you earned any additional delayed retirement credits during the calendar year in which you attained age 70. Any increase in your benefit amount is effective beginning with the month you attained age 70.

(3) *Credits earned prior to entitlement.* If you are full retirement age or older and eligible for old-age benefits but do not apply for benefits, your delayed retirement credits for months from the month of attainment of full retirement age through the end of the year prior to the year of filing will be included in the computation of your initial benefit amount. Credits earned in the year you attain age 70 will be added in the month you attain age 70.

(d) *How do delayed retirement credits affect the special minimum primary insurance amount?* We do not add delayed retirement credits to your old-age benefit if your benefit is based on the special minimum primary insurance amount described in § 404.260. We add the delayed retirement credits only to your old-age benefit based on your regular primary insurance amount, *i.e.* as computed under one of the other provisions of subpart C of this part. If your benefit based on the regular primary insurance amount plus your delayed retirement credits is higher than the benefit based on your special minimum primary insurance amount, we will pay the higher amount to you. However, if the special minimum primary insurance amount is higher than the regular primary insurance amount without the delayed retirement credits, we will use the special minimum primary insurance amount to determine the family maximum and the benefits of others entitled on your earnings record.

(e) *What is the effect of my delayed retirement credits on the benefit amount of others entitled on my earnings record?*

(1) *Surviving Spouse or Surviving Divorced Spouse.* If you earn delayed retirement credits during your lifetime, we will compute benefits for your surviving spouse or surviving divorced spouse based on your regular primary insurance amount plus the amount of those delayed retirement credits. All delayed retirement credits, including any earned during the year of death, can be used in computing the benefit amount for your surviving spouse or surviving divorced spouse beginning with the month of your death. We compute delayed retirement credits up to but not including the month of death.

(2) *Other Family Member.* We do not use your delayed retirement credits to increase the benefits of other family members entitled on your earnings record.

(3) *Family Maximum.* We add delayed retirement credits to your benefit after we compute the family maximum. However, we add delayed retirement credits to your surviving spouse's or

surviving divorced spouse's benefit before we reduce for the family maximum.

10. Section 404.315 is amended by revising the section heading, and paragraph (a), introductory text, to read as follows:

§ 404.315 Who is entitled to disability benefits?

(a) *General.* You are entitled to disability benefits while disabled before attaining full retirement age as defined in § 404.409 if * * *

* * * * *

11. Section 404.316 is amended by revising paragraph (b)(2) to read as follows:

§ 404.316 When entitlement to disability benefits begins and ends.

* * * * *

(b)* * *

(2) The month before the month you attain full retirement age as defined in § 404.409 (at full retirement age your disability benefits will be automatically changed to old-age benefits);

* * * * *

12. Section 404.317 is revised to read as follows:

§ 404.317 How is the amount of my disability benefit calculated?

Your monthly benefit is equal to the primary insurance amount (PIA). This amount is computed under the rules in subpart C of this part as if it was an old-age benefit, and as if you were 62 years of age at the beginning of the 5-month waiting period mentioned in § 404.315(a). If the 5-month waiting period is not required because of your previous entitlement, your PIA is figured as if you were 62 years old when you become entitled to benefits this time. Your monthly benefit amount may be reduced if you receive worker's compensation or public disability payments before you become 65 years old as described in § 404.408. Your benefits may also be reduced if you were entitled to other retirement-age benefits before you attained full retirement age (as defined in § 404.409).

13. Section 404.321 is amended by revising paragraph (a) and paragraph (c)(1) to read as follows:

§ 404.321 When a period of disability begins and ends.

(a) *When a period of disability begins.* Your period of disability begins on the day your disability begins if you are insured for disability on that day. If you are not insured for disability on that day, your period of disability will begin on the first day of the first calendar quarter after your disability began in which you become insured for disability. Your period of disability may not begin after you have attained full retirement age as defined in § 404.409.

* * * * *

(c) * * *

(1) The month before the month in which you attain full retirement age as defined in § 404.409.

* * * * *

14. Section 404.335 is revised to read as follows:

§ 404.335 How do I become entitled to widow's or widower's benefits?

We will find you entitled to benefits as the widow or widower of a person who died fully insured if you meet the requirements in paragraphs (a) through (e) of this section:

(a) You are the insured's widow or widower based upon a relationship described in §§ 404.345 through 404.346, and you meet one of the conditions in paragraphs (a)(1) through (4) of this section:

(1) Your relationship to the insured as a wife or husband lasted for at least 9 months immediately before the insured died.

(2) Your relationship to the insured as a wife or husband did not last 9 months before the insured died, but at the time of your marriage the insured was reasonably expected to live for 9 months, and you meet one of the conditions in paragraphs (a)(2)(i) through (iii) of this section:

(i) The death of the insured was accidental. The death is accidental if it was caused by an event that the insured did not expect; it was the result of bodily injuries received from violent and external causes; and as a direct result of these injuries, death occurred not later than 3 months after the day on which the bodily injuries were received. An intentional and voluntary suicide will not be considered an accidental death.

(ii) The death of the insured occurred in the line of duty while he or she was serving on active duty as a member of the uniformed services as defined in § 404.1019.

(iii) You had been previously married to the insured for at least 9 months.

(3) You and the insured were the natural parents of a child; or you were married to the insured when either of you adopted the other's child or when both of you adopted a child who was then under 18 years old.

(4) In the month before you married the insured, you were entitled to or, if you had applied and had been old enough, could have been entitled to any of these benefits or payments: widow's, widower's, father's (based on the record of a fully insured individual), mother's (based on the record of a fully insured individual), wife's, husband's, parent's, or disabled child's benefits; or annuity payments under the Railroad Retirement Act for widows, widowers, parents, or children age 18 or older.

(b) You apply, except that you need not apply again if you meet one of the conditions in paragraphs (b)(1) through (4) of this section:

(1) You are entitled to wife's or husband's benefits for the month before the month in which the insured dies and you have attained full retirement age (as defined in § 404.409) or you are not entitled to either old-age or disability benefits.

(2) You are entitled to mother's or father's benefits for the month before the month in which you attained full retirement age (as defined in § 404.409).

(3) You are entitled to wife's or husband's benefits and to either old-age or disability benefits in the month before the month of the insured's death, you are under full retirement age (as defined in § 404.409) in the month of death, and you have filed a Certificate of Election in which you elect to receive reduced widow's or widower's benefits.

(4) You applied in 1990 for widow's or widower's benefits based on disability and you meet both of the conditions in paragraphs (b)(4)(i) and (ii) of this section:

(i) You were entitled to disability insurance benefits for December 1990, or eligible for supplemental security income or federally administered State supplementary payments, as specified in subparts B and T of part 416 of this chapter, respectively, for January 1991.

(ii) You were found not disabled for any month based on the definition of disability in §§ 404.1577 and 404.1578, as in effect prior to January 1991, but would have been entitled if the standard in § 404.1505(a) had applied. (This exception to the requirement for filing an application is effective only with respect to benefits payable for months after December 1990.)

(c) You are at least 60 years old; or you are at least 50 years old and have a disability as defined in § 404.1505 and you meet all of the conditions in paragraphs (c)(1) through (4) of this section:

(1) Your disability started not later than 7 years after the insured died or 7 years after you were last entitled to mother's or father's benefits or to widow's or widower's benefits based upon a disability, whichever occurred last.

(2) Your disability continued during a waiting period of 5 full consecutive

months, unless months beginning with the first month of eligibility for supplemental security income or federally administered State supplementary payments are counted, as explained in the Exception in paragraph (c)(3) of this section. The waiting period may begin no earlier than the 17th month before you applied; the fifth month before the insured died; or if you were previously entitled to mother's, father's, widow's, or widower's benefits, the 5th month before your entitlement to benefits ended. If you were previously entitled to widow's or widower's benefits based upon a disability, no waiting period is required.

(3) Exception: For monthly benefits payable for months after December 1990, if you were or have been eligible for supplemental security income or federally administered State supplementary payments, as specified in subparts B and T of part 416 of this chapter, respectively, your disability need not have continued through a separate, full 5-month waiting period before you may begin receiving benefits. We will include as months of the 5-month waiting period the months in a period beginning with the first month you received supplemental security income or a federally administered State supplementary payment and continuing through all succeeding months, regardless of whether the months in the period coincide with the months in which your waiting period would have occurred, or whether you continued to be eligible for supplemental security income or a federally administered State supplementary payment after the period began, or whether you met the nondisability requirements for entitlement to widow's or widower's benefits. However, we will not pay you benefits under this provision for any month prior to January 1991.

(4) You have not previously received 36 months of payments based on disability when drug addiction or alcoholism was a contributing factor material to the determination of disability (as described in § 404.1535), regardless of the number of entitlement periods you may have had, or your current application for widow's or widower's benefits is not based on a disability where drug addiction or alcoholism is a contributing factor material to the determination of disability.

(d) You are not entitled to an old-age benefit that is equal to or larger than the insured person's primary insurance amount.

(e) You are unmarried, unless for benefits for months after 1983 you meet one of the conditions in paragraphs (e)(1) through (3) of this section:

(1) You remarried after you became 60 years old.

(2) You are now age 60 or older and you meet both of the conditions in paragraphs (e)(2)(i) and (ii) of this section:

(i) You remarried after attaining age 50 but before attaining age 60.

(ii) At the time of the remarriage, you were entitled to widow's or widower's benefits as a disabled widow or widower.

(3) You are now at least age 50, but not yet age 60 and you meet both of the conditions in paragraphs (e)(3)(i) and (ii) of this section:

(i) You remarried after attaining age 50.

(ii) You met the disability requirements in paragraph (c) of this section at the time of your remarriage (*i.e.*, your disability began within the specified time and before your remarriage).

15. Section 404.336 is revised to read as follows:

§ 404.336 How do I become entitled to widow's or widower's benefits as a surviving divorced spouse?

We will find you entitled to widow's or widower's benefits as the surviving divorced wife or the surviving divorced husband of a person who died fully insured if you meet the requirements in paragraphs (a) through (e) of this section:

(a) You are the insured's surviving divorced wife or surviving divorced husband and you meet both of the conditions in paragraphs (a)(1) and (2) of this section:

(1) You were validly married to the insured under State law as described in § 404.345 or are deemed to have been validly married as described in § 404.346.

(2) You were married to the insured for at least 10 years immediately before your divorce became final.

(b) You apply, except that you need not apply again if you meet one of the conditions in paragraphs (b)(1) through (4) of this section:

(1) You are entitled to wife's or husband's benefits for the month before the month in which the insured dies and you have attained full retirement age (as defined in § 404.409) or you are not entitled to old-age or disability benefits.

(2) You are entitled to mother's or father's benefits for the month before the month in which you attain full retirement age (as defined in § 404.409).

(3) You are entitled to wife's or husband's benefits and to either old-age or disability benefits in the month before the month of the insured's death, you have not attained full retirement age (as defined in § 404.409) in the month of death, and you have filed a Certificate of Election in which you elect to receive reduced widow's or widower's benefits.

(4) You applied in 1990 for widow's or widower's benefits based on disability, and you meet the requirements in both paragraphs (b)(4)(i) and (ii) of this section:

(i) You were entitled to disability insurance benefits for December 1990 or eligible for supplemental security income or federally administered State supplementary payments, as specified in subparts B and T of part 416 of this chapter, respectively, for January 1991.

(ii) You were found not disabled for any month based on the definition of disability in §§ 404.1577 and 404.1578, as in effect prior to January 1991, but would have been entitled if the standard in § 404.1505(a) had applied. (This exception to the requirement for filing an application is effective only with respect to benefits payable for months after December 1990.)

(c) You are at least 60 years old; or you are at least 50 years old and have a disability as defined in § 404.1505 and you meet all of the conditions in paragraphs (c)(1) through (4) of this section:

(1) Your disability started not later than 7 years after the insured died or 7 years after you were last entitled to mother's or father's benefits or to widow's or widower's benefits based upon a disability, whichever occurred last.

(2) Your disability continued during a waiting period of 5 full consecutive months, unless months beginning with the first month of eligibility for supplemental security income or federally administered State supplementary payments are counted, as explained in the Exception in paragraph (c)(3) of this section. This waiting period may begin no earlier than the 17th month before you applied; the fifth month before the insured died; or if you were previously entitled to mother's, father's, widow's, or widower's benefits, the 5th month before your previous entitlement to benefits ended. If you were previously entitled to widow's or widower's benefits based upon a disability, no waiting period is required.

(3) Exception: For monthly benefits payable for months after December 1990, if you were or have been eligible for supplemental security income or federally administered State supplementary payments, as specified in subparts B and T of part 416 of this

chapter, respectively, your disability does not have to have continued through a separate, full 5-month waiting period before you may begin receiving benefits. We will include as months of the 5-month waiting period the months in a period beginning with the first month you received supplemental security income or a federally administered State supplementary payment and continuing through all succeeding months, regardless of whether the months in the period coincide with the months in which your waiting period would have occurred, or whether you continued to be eligible for supplemental security income or a federally administered State supplementary payment after the period began, or whether you met the nondisability requirements for entitlement to widow's or widower's benefits. However, we will not pay you benefits under this provision for any month prior to January 1991.

(4) You have not previously received 36 months of payments based on disability when drug addiction or alcoholism was a contributing factor material to the determination of disability (as described in § 404.1535), regardless of the number of entitlement periods you may have had, or your current application for widow's or widower's benefits is not based on a disability where drug addiction or alcoholism is a contributing factor material to the determination of disability.

(d) You are not entitled to an old-age benefit that is equal to or larger than the insured person's primary insurance amount.

(e) You are unmarried, unless for benefits for months after 1983 you meet one of the conditions in paragraphs (e)(1) through (3) of this section:

(1) You remarried after you became 60 years old.

(2) You are now age 60 or older and you meet both of the conditions in paragraphs (e)(2)(i) and (ii) of this section:

(i) You remarried after attaining age 50 but before attaining age 60.

(ii) At the time of the remarriage, you were entitled to widow's or widower's benefits as a disabled widow or widower.

(3) You are now at least age 50 but not yet age 60 and you meet one of the conditions in paragraphs (e)(3)(i) and (ii) of this section:

(i) You remarried after attaining age 50.

(ii) You met the disability requirements in paragraph (c) of this section at the time of your remarriage (*i.e.*, your disability began within the specified time and before your remarriage).

16. Section 404.337 is revised to read as follows:

§ 404.337 When does my entitlement to widow's and widower's benefits start and end?

(a) We will find you entitled to widow's or widower's benefits under § 404.335 or § 404.336 beginning with the first month covered by your application in which you meet all other requirements for entitlement.

(b) We will end your entitlement to widow's or widower's benefits at the earliest of the following times:

(1) The month before the month in which you become entitled to an old-age benefit that is equal to or larger than the insured's primary insurance amount.

(2) The second month after the month your disability ends or, where disability ends on or after December 1, 1980, the month before your termination month (§ 404.325). However your payments are subject to the provisions of paragraphs (c) and (d) of this section. **Note:** You may remain eligible for payment of benefits if you attained full retirement age (as defined in § 404.409) before your termination month and you meet the other requirements for widow's or widower's benefits.

(3) If drug addiction or alcoholism is a contributing factor material to the determination of disability as described in § 404.1535, the month after the 12th consecutive month of suspension for noncompliance with treatment or after 36 months of benefits on that basis when treatment is available regardless of the number of entitlement periods you may have had, unless you are otherwise disabled without regard to drug addiction or alcoholism.

(4) The month before the month in which you die.

(c)(1) If you are entitled to widow's or widower's benefits based on a disability and your impairment is no longer disabling, generally, we will continue your benefits if you meet all the conditions in paragraphs (c)(1)(i) through (iv) of this section:

(i) Your disability did not end before December 1980, the effective date of this provision of the law.

(ii) You are participating in an appropriate program of vocational rehabilitation as described in § 404.316(c)(1)(ii).

(iii) You began the program before your disability ended.

(iv) We determined that your completion of the program, or your continuation in the program for a specified period of time, would significantly increase the likelihood that you will not have to return to the disability benefit rolls.

(2) Generally, we will stop your benefits with the month you meet one of the conditions in paragraphs (c)(2)(i) through (iii) of this section:

(i) You complete the program.

(ii) You stop participating in the program for any reason.

(iii) We determined that your continuing participation in the program would no longer significantly increase the likelihood that you will be permanently removed from the disability benefit rolls.

(iv) Exception: In no case will we stop your benefits with a month earlier than the second month after the month your disability ends.

(d) If, after November 1980, you have a disabling impairment (§ 404.1511), we will pay you benefits for all months in which you do not do substantial gainful activity during the reentitlement period (§ 404.1592a) following the end of your trial work period (§ 404.1592). If you are unable to do substantial gainful activity in the first month following the reentitlement period, we will pay you benefits until you are able to do substantial gainful activity. (Earnings during your trial work period do not affect the payment of your benefits.) We will also pay you benefits for the first month after the trial work period in which you do substantial gainful activity and the two succeeding months, whether or not you do substantial gainful activity during those succeeding months. After those three months, we cannot pay you benefits for any months in which you do substantial gainful activity.

17. Section 404.338 is revised to read as follows:

§ 404.338 How is the amount of my widow's or widower's benefit calculated?

Your widow's or widower's monthly benefit is equal to the insured person's primary insurance amount. If the insured person died before reaching age 62 and you are first eligible after 1984, we may compute a special primary insurance amount to determine the amount of your monthly benefit (*see* § 404.212(b)). We may increase your monthly benefit amount if the insured person earned delayed retirement credit after full retirement age (as defined in § 404.409) by working or by delaying filing for benefits (*see* § 404.313). The amount of your monthly benefit may change as explained generally in § 404.304. In addition, your monthly benefit will be reduced if the insured person was entitled to old-age benefits that were reduced for age because he or she chose to receive them before

attaining full retirement age. In this instance, your benefit is reduced, if it would otherwise be higher, to either the amount the insured would have been entitled to if still alive or 82½ percent of his or her primary insurance amount, whichever is larger.

18. Section 404.352 is revised to read as follows:

§ 404.352 When does my entitlement to child's benefits begin and end?

(a) We will find your entitlement to child's benefits begins at the following times:

(1) If the insured is deceased, with the first month covered by your application in which you meet all other requirements for entitlement.

(2) If the insured is living and your first month of entitlement is September 1981 or later, with the first month covered by your application throughout which you meet all other requirements for entitlement.

(3) If the insured is living and your first month of entitlement is before September 1981, with the first month covered by your application in which you meet all other requirements for entitlement.

(b) We will find your entitlement to child's benefits ends at the earliest of the following times:

(1) With the month before the month in which you become 18 years old, if you are not disabled or a full-time student.

(2) With the second month following the month in which your disability ends, if you become 18 years old and you are disabled. If your disability ends on or after December 1, 1980, your entitlement to child's benefits continues, subject to the provisions of paragraphs (c) and (d) of this section, until the month before your termination month (§ 404.325).

(3) With the last month you are a full-time student or, if earlier, with the month before the month you become age 19, if you become 18 years old and you qualify as a full-time student who is not disabled. If you become age 19 in a month in which you have not completed the requirements for, or received, a diploma or equivalent certificate from an elementary or secondary school and you are required to enroll for each quarter or semester, we will find your entitlement ended with the month in which the quarter or semester in which you are enrolled ends. If the school you are attending does not have a quarter or semester system which requires reenrollment, we will find your entitlement to benefits ended with the month you complete the course or, if earlier, the first day of the third month following the month in which you become 19 years old.

(4) With the month before the month you marry. We will not find your benefits ended, however, if you are age 18 or older, disabled, and you marry a person entitled to child's benefits based on disability or person entitled to old-age, divorced wife's, divorced husband's, widow's, widower's, mother's, father's, parent's, or disability benefits.

(5) With the month before the month the insured's entitlement to old-age or disability benefits ends for a reason other than death or the attainment of full retirement age (as defined in § 404.409). Exception: We will continue your benefits if the insured person was entitled to disability benefits based on a finding that drug addiction or alcoholism was a contributing factor material to the determination of his or her disability (as described in § 404.1535), the insured person's benefits ended after 36 months of payment (see § 404.316(e)) or 12 consecutive months of suspension for noncompliance with treatment (see § 404.316(f)), and the insured person remains disabled.

(6) With the month before the month you die.

(c) If you are entitled to benefits as a disabled child age 18 or over and your disability is based on a finding that drug addiction or alcoholism was a contributing factor material to the determination of disability (as described in § 404.1535), we will find your entitlement to benefits ended under the following conditions:

(1) If your benefits have been suspended for a period of 12 consecutive months for failure to comply with treatment, with the month following the 12 months unless you are otherwise disabled without regard to drug addiction or alcoholism (see § 404.470(c)).

(2) If you have received 36 months of benefits on that basis when treatment is available, regardless of the number of entitlement periods you may have had, with the month following such 36-month payment period unless you are otherwise disabled without regard to drug addiction or alcoholism.

(d)(1) Generally, we will continue your benefits after your impairment is no longer disabling if you meet all the following conditions:

(i) Your disability did not end before December 1980, the effective date of this provision of the law.

(ii) You are participating in an appropriate program of vocational rehabilitation as described in § 404.316(c)(1)(ii).

(iii) You began the program before your disability ended.

(iv) We have determined that your completion of the program, or your continuation in the program for a specified period of time, will significantly increase the likelihood that you will not have to return to the disability benefit rolls.

(2) Generally, we will end your entitlement to benefits with the month you meet one of the following conditions:

(i) You complete the program.

(ii) You stop participating in the program for any reason.

(iii) We determine that your continuing participation in the program will no longer significantly increase the likelihood that you will be permanently removed from the disability benefit rolls.

(iv) Exception: In no case will we stop your benefits with a month earlier than the second month after the month your disability ends.

(e) If, after November 1980, you have a disabling impairment (§ 404.1511), we will pay you benefits for all months in which you do not do substantial gainful activity during the reentitlement period (§ 404.1592a) following the end of your trial work period (§ 404.1592). If you are unable to do substantial gainful activity in the first month following the reentitlement period, we will pay you benefits until you are able to do substantial gainful activity. (Earnings during your trial work period do not affect the payment of your benefits during that period.) We will also pay you benefits for the first month after the trial work period in which you do substantial gainful activity and the two succeeding months, whether or not you do substantial gainful activity during those succeeding months. After those three months, we cannot pay you benefits for any months in which you do substantial gainful activity.

Subpart E—[Amended]

19. The authority citation for subpart E of part 404 is revised to read as follows:

Authority: Secs. 202, 203, 204(a) and (e), 205(a) and (c), 216(l), 222(b), 223(e), 224, 225, 702(a)(5) and 1129A of the Social Security Act (42 U.S.C. 402, 403, 404(a) and (e), 405(a) and (c), 416(l), 422(b), 423(e), 424a, 425, 902(a)(5) and 1320a–8a).

20. Section 404.409 is added to read as follows:

§ 404.409 What Is Full Retirement Age?

Full retirement age is the age at which you may receive unreduced old-age, wife's, husband's, widow's, or

widower's benefits. Full retirement age has been 65 but is being gradually raised to age 67 beginning with people born after January 1, 1938. See § 404.102 regarding determination of age.

(a) *What is my full retirement age for old-age benefits or wife's or husband's benefits?* You may receive unreduced old-age, wife's, or husband's benefits beginning with the month you attain the age shown.

If your birth date is:	Full retirement age is:
Before 1/2/1938	65 years.
1/2/1938—1/1/1939 ...	65 years and 2 months.
1/2/1939—1/1/1940 ...	65 years and 4 months.
1/2/1940—1/1/1941 ...	65 years and 6 months.
1/2/1941—1/1/1942 ...	65 years and 8 months.
1/2/1942—1/1/1943 ...	65 years and 10 months.
1/2/1943—1/1/1955 ...	66 years.
1/2/1955—1/1/1956 ...	66 years and 2 months.
1/2/1956—1/1/1957 ...	66 years and 4 months.
1/2/1957—1/1/1958 ...	66 years and 6 months.
1/2/1958—1/1/1959 ...	66 years and 8 months.
1/2/1959—1/1/1960 ...	66 years and 10 months.
1/2/1960 and later	67 years.

(b) *What is my full retirement age for widow's or widower's benefits?* You may receive unreduced widow's or widower's benefits beginning with the month you attain the age shown.

If your birth date is:	Full retirement age is:
Before 1/2/1912	62 years.
1/2/1912—1/1/1940 ...	65 years.
1/2/1940—1/1/1941 ...	65 years and 2 months.
1/2/1941—1/1/1942 ...	65 years and 4 months.
1/2/1942—1/1/1943 ...	65 years and 6 months.
1/2/1943—1/1/1944 ...	65 years and 8 months.
1/2/1944—1/1/1945 ...	65 years and 10 months.
1/2/1945—1/1/1957 ...	66 years.
1/2/1957—1/1/1958 ...	66 years and 2 months.
1/2/1958—1/1/1959 ...	66 years and 4 months.
1/2/1959—1/1/1960 ...	66 years and 6 months.
1/2/1960—1/1/1961 ...	66 years and 8 months.
1/2/1961—1/1/1962 ...	66 years and 10 months.
1/2/1962 and later	67 years.

(c) *Can I still retire before full retirement age?* You may still elect early retirement. You may receive old-age, wife's or husband's benefits at age 62. You may receive widow's or widower's benefits at age 60. Those benefits will be reduced as explained in § 404.410.

21. Section 404.410 is revised to read as follows:

§ 404.410 How does SSA reduce my benefits when my entitlement begins before full retirement age?

Generally your old-age, wife's, husband's, widow's, or widower's benefits are reduced if entitlement begins before the month you attain full retirement age (as defined in § 404.409). However, your benefits as a wife or husband are not reduced for any month in which you have in your care a child of the worker on whose earnings record you are entitled. The child must be entitled to child's benefits. Your benefits as a widow or widower are not reduced below the benefit amount you would receive as a mother or father for any month in which you have in your care a child of the worker on whose record you are entitled. The child must be entitled to child's benefits. Subject to §§ 404.411 through 404.413, reductions in benefits are made in the amounts described.

(a) *How does SSA reduce my old-age benefits?* The reduction in your primary insurance amount is based on the number of months of entitlement prior to the month you attain full retirement age. The reduction is $\frac{5}{9}$ of 1 percent for each of the first 36 months and $\frac{5}{12}$ of 1 percent for each month in excess of 36.

Example: Alex's full retirement age for unreduced benefits is 65 years and 8 months. She elects to begin receiving benefits at age 62. Her primary insurance amount of $980.50 must be reduced because of her entitlement to benefits 44 months prior to full retirement age. The reduction is 36 months at $\frac{5}{9}$ of 1 percent and 8 months at $\frac{5}{12}$ of 1 percent.

$980.50 \times 36 \times \frac{5}{9} \times .01 = \$196.10$

$980.50 \times 8 \times \frac{5}{12} \times .01 = \$\ 32.68$

The two added together equal a total reduction of $228.78. This amount is rounded to $228.80 (the next higher multiple of 10 cents) and deducted from the primary insurance amount. The resulting $751.70 is the monthly benefit payable.

(b) *How does SSA reduce my wife's or husband's benefits?* Your wife's or husband's benefits before any reduction (see §§ 404.304 and 404.333) are reduced first (if necessary) for the family maximum under § 404.403. They are then reduced based on the number of months of entitlement prior to the month you attain full retirement age. This does not include any month in which you have a child of the worker on whose earnings record you are entitled in your care. The child must be entitled to child benefits. The reduction is $\frac{25}{36}$ of 1 percent for each of the first 36 months and $\frac{5}{12}$ of 1 percent for each month in excess of 36.

Example: Sam is entitled to old-age benefits. His spouse Ashley elects to begin receiving wife's benefits at age 63. Her full retirement age for unreduced benefits is 65 and 4 months. Her benefit will be reduced for 28 months of entitlement prior to full retirement age. If her unreduced benefit is $412.40 the reduction will be $412.40 × 28 × $\frac{25}{36}$ × .01. The resulting $80.18 is rounded to $80.20 (the next higher multiple of 10 cents) and subtracted from $412.40 to determine the monthly benefit amount of $332.20.

(c) *How does SSA reduce my widow's or widower's benefits?*

Your entitlement to widow's or widower's benefits may begin at age 60 based on age or at age 50 based on disability. Refer to § 404.335 for more information on the requirements for entitlement. Both types are reduced if entitlement begins prior to attainment of full retirement age (as defined in § 404.409).

(1) *Widow's or widower's benefits based on age.* Your widow's or widower's unreduced benefit amount (the worker's primary insurance amount after any reduction for the family maximum under § 404.403), is reduced or further reduced based on the number of months of entitlement prior to the month you attain full retirement age. This does not include any month in which you have in your care a child of the worker on whose earnings record you are entitled. The child must be entitled to child's benefits. The number of months of entitlement prior to full retirement age is multiplied by .285 and then divided by the number of months in the period beginning with the month of attainment of age 60 and ending with the month immediately before the month of attainment of full retirement age.

Example: Ms. Bogle is entitled to an unreduced widow benefit of $785.70 beginning at age 64. Her full retirement age for unreduced old-age benefits is 65 years and 4 months. She will receive benefits for 16 months prior to attainment of full retirement age. The number of months in the period from age 60 through full retirement age of 65 and 4 months is 64. The reduction in her benefit is $785.70 × 16 × .285 divided by 64 or $55.98. $55.98 is rounded to the next higher multiple of 10 cents ($56.00) and subtracted from $785.70. The result is a monthly benefit of $729.70.

(2) *Widow's or widower's benefits based on disability.* (i) For months after December 1983, your widow's or widower's benefits are not reduced for months of entitlement prior to age 60. You are deemed to be age 60 in your

month of entitlement to disabled widow's or widower's benefits and your benefits are reduced only under paragraph (c)(1) of this section.

(ii) For months from January 1973 through December 1983, benefits as a disabled widow or widower were reduced under paragraph (c)(1) of this section. The benefits were then subject to an additional reduction of 43/240 of one percent for each month of entitlement prior to age 60 based on disability.

(3) *Widow's or widower's benefits prior to 1973.* For months prior to January 1973 benefits as a widow or widower were reduced only for months of entitlement prior to age 62. The reduction was 5/9 of one percent for each month of entitlement from the month of attainment of age 60 through the month prior to the month of attainment of age 62. There was an additional reduction of 43/198 of one percent for each month of entitlement prior to age 60 based on disability.

(d) *If my benefits are reduced under this section does SSA ever change the reduction?* The reduction computed under paragraphs (a), (b) or (c) of this section may later be adjusted to eliminate reduction for certain months of entitlement prior to full retirement age as provided in § 404.412. For special provisions on reducing benefits for months prior to full retirement age involving entitlement to two or more benefits, see § 404.411.

(e) *Are my widow's or widower's benefits affected if the deceased worker was entitled to old-age benefits?* If the deceased individual was entitled to old-age benefits, see § 404.338 for special rules that may affect your reduced widow's or widower's benefits.

22. Section 404.411 is revised to read as follows:

§ 404.411 How are benefits reduced for age when a person is entitled to two or more benefits?

(a) *What is the general rule?* Except as specifically provided in this section, benefits of an individual entitled to more than one benefit will be reduced for months of entitlement before full retirement age (as defined in § 404.409) according to the provisions of § 404.410. Such age reductions are made before any reduction under the provisions of § 404.407.

(b) *How is my disability benefit reduced after entitlement to an old-age benefit or widow's or widower's benefit?* A person's disability benefit is reduced following entitlement to an old-age or widow's or widower's benefit (or following the month in which all conditions for entitlement to the widow's or widower's benefit are met except that the individual is entitled to an old-age benefit which equals or exceeds the primary insurance amount on which the widow's or widower's benefit is based) in accordance with the following provisions:

(1) *Individuals born January 2, 1928, or later whose disability began January 1, 1990, or later.* When an individual is entitled to a disability benefit for a month after the month in which she or he becomes entitled to an old-age benefit which is reduced for age under § 404.410, the disability benefit is reduced by the amount by which the old-age benefit would be reduced under § 404.410 if she or he attained full retirement age in the first month of the most recent period of entitlement to the disability benefit.

(2) *Individuals born January 2, 1928, or later whose disability began before January 1, 1990, and, all individuals born before January 2, 1928, regardless of when their disability began.*

(i) *First entitled to disability in or after the month of attainment of age 62.* When an individual is first entitled to a disability benefit in or after the month in which she or he attains age 62 and for which she or he is first entitled to a widow's or widower's benefit (or would be so entitled except for entitlement to an equal or higher old-age benefit) before full retirement age, the disability benefit is reduced by the larger of:

(A) The amount the disability benefit would have been reduced under paragraph (b)(1) of this section; or

(B) The amount equal to the sum of the amount the widow's or widower's benefit would have been reduced under the provisions of § 404.410 if full retirement age for unreduced benefits were age 62 plus the amount by which the disability benefit would have been reduced under paragraph (b)(1) of this section if the benefit were equal to the excess of such benefit over the amount of the widow's or widower's benefit (without consideration of this paragraph).

(ii) *First entitled to disability before age 62.* When a person is first entitled to a disability benefit for a month before the month in which she or he attains age 62 and she or he is also entitled to a widow's or widower's benefit (or would be so entitled except for entitlement to an equal or higher old-age benefit), the disability benefit is reduced as if the widow or widower attained full retirement age in the first month of her or his most recent period of entitlement to the disability benefits.

(c) *How is my old-age benefit reduced after entitlement to a widow's or widower's benefit?*

(1) *Individual born after January 1, 1928.* The old-age benefit is reduced in accordance with § 404.410(a). There is no further reduction.

(2) *Individual born before January 2, 1928.* The old-age benefit is reduced if, in the first month of entitlement, she or he is also entitled to a widow's or widower's benefit to which she or he was first entitled for a month before attainment of full retirement age or if, before attainment of full retirement age, she or he met all conditions for entitlement to widow's or widower's benefits in or before the first month for which she or he was entitled to old-age benefits except that the old-age benefit equals or exceeds the primary insurance amount on which the widow's or widower's benefit would be based. Under these circumstances, the old-age benefit is reduced by the larger of the following:

(i) The amount by which the old-age benefit would be reduced under the regular age reduction provisions of § 404.410; or

(ii) An amount equal to the sum of:

(A) The amount by which the widow's or widower's benefit would be reduced under § 404.410 for months prior to age 62; and

(B) The amount by which the old-age benefit would be reduced under § 404.410 if it were equal to the excess of the individual's primary insurance amount over the widow's or widower's benefit before any reduction for age (but after any reduction for the family maximum under § 404.403).

(d) *How is my wife's or husband's benefit reduced when I am entitled to a reduced old-age benefit in the same month?* When a person is first entitled to a wife's or husband's benefit in or after the month of attainment of age 62, that benefit is reduced if, in the first month of entitlement, she or he is also entitled to an old-age benefit (but is not entitled to a disability benefit) to which she or he was first entitled before attainment of full retirement age. Under these circumstances, the wife's or husband's benefit is reduced by the sum of:

(1) The amount by which the old-age benefit would be reduced under the provisions of § 404.410; and

(2) The amount by which the spouse benefit would be reduced under the provisions of § 404.410 if it were equal to the excess of such benefit (before any reduction for age but after reduction for the family maximum under § 404.403) over the individual's own primary insurance amount.

(e) *How is my wife's or husband's or widow's or widower's benefit reduced when I am entitled to a reduced disability benefit in the same month?* When a person is first entitled to a spouse or widow's or widower's benefit in or after the month of attainment of age 62 (or in the case of widow's or widower's benefits, age 50) that benefit is reduced if, in the first month of entitlement to that benefit, he or she is also entitled to a reduced disability benefit. Under these circumstances, the wife's or husband's or widow's or widower's benefit is reduced by the sum of:

(1) The amount (if any) by which the disability benefit is reduced under paragraph (b)(1) of this section, and

(2) The amount by which the wife's or husband's or widow's or widower's benefit would be reduced under § 404.410 if it were equal to the excess of such benefit (before any reduction for age but after reduction for the family maximum under § 404.403) over the disability benefit (before any reduction under paragraph (b) of this section).

23. Section 404.412 is revised to read as follows:

§ 404.412 After my benefits are reduced for age when and how will adjustments to that reduction be made?

(a) *When may adjustment be necessary?* The following months are not counted for purposes of reducing benefits in accordance with § 404.410;

(1) Months subject to deduction under § 404.415, § 404.417, or § 404.422;

(2) In the case of a wife's or husband's benefit, any month in which she or he had a child of the insured individual in her or his care and for which the child was entitled to child's benefits;

(3) In the case of a wife's or husband's benefit, any month for which entitlement to such benefits is precluded because the insured person's disability ceased (and, as a result, the insured individual's entitlement to disability benefits ended);

(4) In the case of a widow's or widower's benefit, any month in which she or he had in her or his care a child of the deceased insured individual and for which the child was entitled to child's benefits;

(5) In the case of a widow's or widower's benefit, any month before attainment of full retirement age for which she or he was not entitled to such benefits;

(6) In the case of an old-age benefit, any month for which the individual was entitled to disability benefits.

(b) *When is the adjustment made?* We make automatic adjustments in benefits to exclude the months of entitlement described in paragraphs (a)(1) through (6) of this section from consideration when determining the amount by which such benefits are reduced. Each year we examine beneficiary records to identify when an individual has attained full retirement age and one or more months described in paragraphs (a)(1) through (6) of this section occurred prior to such age during the period of entitlement to benefits reduced for age. Increases in benefit amounts based upon this adjustment are effective with the month of attainment of full retirement age. In the case of widow's or widower's benefits, this adjustment is made in the month of attainment of age 62 as well as the month of attainment of full retirement age.

24. Section 404.413 is revised to read as follows:

§ 404.413 After my benefits are reduced for age what happens if there is an increase in my primary insurance amount?

(a) *What is the general rule on reduction of increases?* After an individual's benefits are reduced for age under §§ 404.410 through 404.411, the primary insurance amount on which such benefits are based may subsequently be increased because of a recomputation, a general benefit increase pursuant to an amendment of the Act, or increases based upon a rise in the cost-of-living under section 215(i) of the Social Security Act. When the primary insurance amount increases the monthly benefit amount also increases.

(b) *How are subsequent increases in the primary insurance amount reduced after 1977?* After 1977, when an individual's benefits have been reduced for age and the benefit is increased due to an increase in the primary insurance amount, the amount of the increase to which the individual is entitled is proportionately reduced as provided in paragraph (c) of this section. The method of reduction is determined by whether entitlement to reduced benefits began before 1978 or after 1977. When an individual is entitled to more than one benefit which is reduced for age, the rules for reducing the benefit increases apply to each reduced benefit.

(c) *How is the reduction computed for increases after 1977?*

(1) *Entitlement to reduced benefits after 1977.* If an individual becomes entitled after 1977 to a benefit reduced for age, and the primary insurance amount on which the reduced benefit is based is increased, the amount of the increase payable to the individual is reduced by the same percentage as we use to reduce the benefit in the month of initial entitlement. Where the reduced benefit of an individual has been adjusted at full retirement age (age 62 and full retirement age for widows or widowers), any increase to which the individual becomes entitled thereafter is reduced by the adjusted percentage.

(2) *Entitlement to reduced benefits before 1978.* For an individual, who became entitled to a benefit reduced for age before 1978, whose benefit may be increased as a result of an increase in the primary insurance amount after 1977, we increase the amount of the benefit by the same percentage as the increase in the primary insurance amount.

(d) *How was the reduction computed for increases prior to 1978?* When the individual's primary insurance amount increased, the amount of the increase was reduced separately under §§ 404.410 and 404.411. The separate reduction was based on the number of months from the effective date of the increase through the month of attainment of age 65. This reduced increase amount was then added to the reduced benefit that was in effect in the month before the effective date of the increase. The result was the new monthly benefit amount.

25. Section 404.421 is revised to read as follows:

§ 404.421 How are deductions made when a beneficiary fails to have a child in his or her care?

Deductions for failure to have a child in care (as defined in subpart D of this part) are made as follows:

(a) *Wife's or husband's benefit.* A deduction is made from the wife's or husband's benefits to which he or she is entitled for any month if he or she is under full retirement age and does not have in his or her care a child of the insured entitled to child's benefits. However, a deduction is not made for any month in which he or she is age 62 or over, but under full retirement age, and there is in effect a certificate of election for him or her to receive actuarially reduced wife's or husband's benefits for such month (see subpart D of this part).

(b) *Mother's or father's benefits.*—(1) *Widow or widower.* A deduction is made from the mother's or father's benefits to which he or she is entitled as the widow or widower (see subpart D of this part) of the deceased individual upon whose earnings such benefit is based, for any month in which he or she does not have in his or her care a child who is entitled to child's benefits based on the earnings of the deceased insured individual.

(2) *Surviving divorced mother or father.* A deduction is made from the mother's or father's benefits to which he or she is entitled as the surviving

divorced mother or father (see subpart D of this part) of the deceased individual upon whose earnings record such benefit is based, for any month in which she or he does not have in care a child of the deceased individual who is her or his son, daughter, or legally adopted child and who is entitled to child's benefits based on the earnings of the deceased insured individual.

(c) *Amount to be deducted.* The amount deducted from the benefits, as described in paragraphs (a) and (b) of this section, is equal to the amount of the benefits which is otherwise payable for the month in which she or he does not have a child in his or her care.

(d) *When a child is considered not entitled to benefits.* For purposes of paragraphs (a) and (b) of this section a person is considered not entitled to child's benefits for any month in which she or he is age 18 or over, and:

(1) Is entitled to child's benefits based on her or his own disability and a deduction is made from the child's benefits because of her or his refusal of rehabilitation services as described in § 404.422(b); or

(2) Is entitled to child's benefits because she or he is a full-time student at an educational institution. This paragraph applies to benefits for months after December 1964.

Subpart G—[Amended]

26. The authority citation for subpart G of part 404 continues to read as follows:

Authority: Secs. 202(i), (j), (o), (p) and (r), 205(a), 216(i)(2), 223(b), 228(a) and 702(a)(5) of the Social Security Act (42 U.S.C. 402(i), (j), (o), (p) and (r), 405(a), 416(i)(2), 423(b), 428(a) and 902(a)(5)).

27. Section 404.621 is revised to read as follows:

§ 404.621 What happens if I file after the first month I meet the requirements for benefits?

(a) *Filing for disability benefits and for old-age, survivors', or dependents' benefits.* (1) If you file an application for disability benefits, widow's or widower's benefits based on disability, or wife's, husband's, or child's benefits based on the earnings record of a person entitled to disability benefits, after the first month you could have been entitled to them, you may receive benefits for up to 12 months immediately before the month in which your application is filed. Your benefits may begin with the first month in this 12-month period in which you meet all the requirements for entitlement. Your entitlement, however, to wife's or husband's benefits under this rule is limited by paragraph (a)(3) of this section.

(2) If you file an application for old-age benefits, widow's or widower's benefits not based on disability, wife's, husband's, or child's benefits based on the earnings record of a person not entitled to disability benefits, or mother's, father's, or parent's benefits, after the first month you could have been entitled to them, you may receive benefits for up to 6 months immediately before the month in which your application is filed. Your benefits may begin with the first month in this 6-month period in which you meet all the requirements for entitlement. Your entitlement, however, to old-age, wife's, husband's, widow's, or widower's benefits under this rule is limited by paragraph (a)(3) of this section.

(3) If the effect of the payment of benefits for a month before the month you file would be to reduce your benefits because of your age, you cannot be entitled to old-age, wife's, husband's, widow's, or widower's benefits for any month before the month in which your application is filed, unless you meet one of the conditions in paragraph (a)(4) of this section. (An explanation of the reduction that occurs because of age if you are entitled to these benefits for a month before you reach full retirement age, as defined in § 404.409, is in § 404.410.) An example follows that assumes you do not meet any of the conditions in paragraph (a)(4) of this section.

Example: You will attain full retirement age in March 2003. If you apply for old-age benefits in March, you cannot be entitled to benefits in the 6-month period before March because the payment of benefits for any of these months would result in your benefits being reduced for age. If you do not file your application until June 2003, you may be entitled to benefits for the month of March, April and May because the payment of benefits for these months would not result in your benefits being reduced for age. You will not, however, receive benefits for the 3 months before March.

(4) The limitation in paragraph (a)(3) of this section on your entitlement to old-age, wife's, husband's, widow's, or widower's benefits for months before you file an application does not apply if:

(i) You are a widow, widower, surviving divorced wife, or surviving divorced husband who is disabled and could be entitled to retroactive benefits for any month before age 60. If you could not be entitled before age 60, the limitation will prevent payment of benefits to you for past months, but it will not affect the month you become entitled to hospital insurance benefits.

(ii) You are a widow, widower, or surviving divorced spouse of the insured person who died in the month before you applied and you were at least age 60 in the month of death of the insured person on whose earnings record you are claiming benefits. In this case, you can be entitled beginning with the month the insured person died if you choose and if you file your application on or after July 1, 1983.

(b) *Filing for lump-sum death payment.* An application for a lump-sum death payment must be filed within 2 years after the death of the person on whose earnings record the claim is filed. There are two exceptions to the 2-year filing requirement:

(1) If there is a good cause for failure to file within the 2-year period, we will consider your application as though it were filed within the 2-year period. Good cause does not exist if you were informed of the need to file an application within the 2-year period and you neglected to do so or did not desire to make a claim. Good cause will be found to exist if you did not file within the time limit due to—

(i) Circumstances beyond your control, such as extended illness, mental or physical incapacity, or a language barrier;

(ii) Incorrect or incomplete information we furnished you;

(iii) Your efforts to get evidence to support your claim without realizing that you could submit the evidence after filing an application; or

(iv) Unusual or unavoidable circumstances which show that you could not reasonably be expected to know of the time limit.

(2) The Soldiers' and Sailors' Civil Relief Act of 1940 provides for extending the filing time.

(c) *Filing for special age 72 payments.* An application for special age 72 payments is not effective as a claim for benefits for any month before you actually file.

(d) *Filing for a period of disability.* You must file an application for a period of disability while you are disabled or no later than 12 months after the month in which your period of disability ended. If you were unable to apply within the 12-month time period because of a physical or mental condition, you may apply not more than 36 months after your disability ended. The general rule we use to decide whether your failure to file was due to a physical or mental condition is stated in § 404.322.

(e) *Filing after death of person eligible for disability benefits or period of disability.* If you file for disability benefits or a period of disability for

another person who died before filing an application and you would qualify under § 404.503(b) to receive any benefits due the deceased, you must file an application no later than the end of the third month following the month in which the disabled person died.

28. Section 404.623 is revised to read as follows:

§ 404.623 Am I required to file for all benefits if I am eligible for old-age and husband's or wife's benefits?

(a) *Presumed filing for husband's or wife's benefits.* If you file an application for old-age benefits, you are presumed to have filed an application for husband's or wife's benefits in the first month of your entitlement to old-age benefits, if—

(1) Your old-age benefits are reduced for age because you choose to receive them before you reach full retirement age (as defined in § 404.409); and

(2) You are eligible for either a husband's or a wife's benefit for the first month of your entitlement to old-age benefits.

(b) *Presumed filing for old-age benefits.* If you file an application for a husband's or a wife's benefit, you are presumed to have filed an application for old-age benefits in the first month of your entitlement to husband's or wife's benefits if—

(1) Your husband's or wife's benefits are reduced for age because you choose to receive them before you reach full retirement age (as defined in § 404.409); and

(2) You are eligible for old-age benefits for the first month of your entitlement to husband's or wife's benefits.

(c) *Exception.* Paragraph (b) of this section does not apply if you are also entitled to disability benefits in the first month of your entitlement to husband's or wife's benefits. In this event, you are presumed to have filed for old-age benefits only if your disability benefits end before you reach full retirement age (as defined in § 404.409).

[FR Doc. 03–1949 Filed 1–29–03; 8:45 am]

BILLING CODE 4191–02–P

DEPARTMENT OF HEALTH AND HUMAN SERVICES

Food and Drug Administration

21 CFR Parts 510 and 524

Ophthalmic and Topical Dosage Form New Animal Drugs; Ivermectin Pour-On

AGENCY: Food and Drug Administration, HHS.

ACTION: Final rule.

SUMMARY: The Food and Drug Administration (FDA) is amending the animal drug regulations to reflect approval of an abbreviated new animal drug application (ANADA) filed by ECO LLC. The ANADA provides for topical use of ivermectin on cattle for treatment and control of various species of external and internal parasites.

DATES: This rule is effective January 30, 2003.

FOR FURTHER INFORMATION CONTACT: Lonnie W. Luther, Center for Veterinary Medicine (HFV–104), Food and Drug Administration, 7519 Standish Pl., Rockville, MD 20855, 301–827–8549, e-mail: lluther@cvm.fda.gov.

SUPPLEMENTARY INFORMATION: ECO LLC, 8209 Hollister Ave., Las Vegas, NV 89131, filed ANADA 200–348 for ECOMECTIN (ivermectin). The application provides for topical use of 0.5 percent ivermectin solution on cattle for the treatment and control of various species of gastrointestinal nematodes, lungworms, grubs, horn flies, lice, and mites. ECO's ECOMECTIN is approved as a generic copy of Merial Limited's IVOMEC Pour-On for Cattle, approved under NADA 140–841. The ANADA is approved as of November 15, 2002, and 21 CFR 524.1193 is amended to reflect the approval. The basis of approval is discussed in the freedom of information summary.

In addition, ECO LLC has not been previously listed in the animal drug regulations as a sponsor of an approved application. At this time, 21 CFR 510.600(c) is being amended to add entries for the firm.

In accordance with the freedom of information provisions of 21 CFR part 20 and 21 CFR 514.11(e)(2)(ii), a summary of safety and effectiveness data and information submitted to support approval of this application may be seen in the Dockets Management Branch (HFA–305), Food and Drug Administration, 5630 Fishers Lane, rm. 1061, Rockville, MD 20852, between 9 a.m. and 4 p.m., Monday through Friday.

The agency has determined under 21 CFR 25.33(a)(1) that this action is of a type that does not individually or cumulatively have a significant effect on the human environment. Therefore, neither an environmental assessment nor an environmental impact statement is required.

This rule does not meet the definition of ''rule'' in 5 U.S.C. 804(3)(A) because it is a rule of ''particular applicability.'' Therefore, it is not subject to the congressional review requirements in 5 U.S.C. 801–808.

List of Subjects

21 CFR Part 510

Administrative practice and procedure, Animal drugs, Labeling, Reporting and recordkeeping requirements.

21 CFR Part 524

Animal drugs.

Therefore, under the Federal Food, Drug, and Cosmetic Act and under authority delegated to the Commissioner of Food and Drugs and redelegated to the Center for Veterinary Medicine, 21 CFR parts 510 and 524 are amended as follows:

PART 510—NEW ANIMAL DRUGS

1. The authority citation for 21 CFR part 510 continues to read as follows:

Authority: 21 U.S.C. 321, 331, 351, 352, 353, 360b, 371, 379e.

2. Section 510.600 is amended in the table in paragraph (c)(1) by alphabetically adding an entry for ''ECO LLC'' and in the table in paragraph (c)(2) by numerically adding an entry for ''066916'' to read as follows:

§ 510.600 Names, addresses, and drug labeler codes of sponsors of approved applications.

* * * * *

(c) * * *

(1) * * *

Firm name and address	Drug labeler code
* * *	* *
ECO LLC, 8209 Hollister Ave., Las Vegas, NV 89131.	066916
* * *	* *

(2) * * *

Drug labeler code	Firm name and address
* * * * *	
066916	ECO LLC, 8209 Hollister Ave., Las Vegas, NV 89131
* * * * *	

PART 524—OPHTHALMIC AND TOPICAL DOSAGE FORM NEW ANIMAL DRUGS

3. The authority citation for 21 CFR part 524 continues to read as follows:

Authority: 21 U.S.C. 360b.

§ 524.1193 [Amended]

4. Section 524.1193 *Ivermectin pour-on* is amended in paragraph (b) by removing ''and 059130'' and by adding in its place '', 059130, and 066916''.

Dated: January 6, 2003.

Stephen F. Sundlof,

Director, Center for Veterinary Medicine.

[FR Doc. 03–2111 Filed 1–29–03; 8:45 am]

BILLING CODE 4160–01–S

POSTAL SERVICE

39 CFR Part 111

Experimental Outside-County Periodicals Co-Palletization Classification

AGENCY: Postal Service.

ACTION: Interim rule.

SUMMARY: This interim rule provides standards for a Postal Service experiment testing whether additional rate incentives would encourage the co-palletization and drop-shipment of currently sacked bundles of individual Periodicals publications. This interim rule will implement two additional per-piece discounts for co-palletization of Periodicals publications that otherwise would have been prepared in sacks prior to co-palletization. The additional per-piece discounts, resulting from Docket No. MC2002–3 at the Postal Rate Commission, would apply to pieces in bundles placed on SCF and ADC pallets that are drop-shipped to either a destination area distribution center (DADC) or a destination sectional center facility (DSCF). This interim rule includes procedures for preparing and documenting co-palletized mailings and for requesting approval to participate in the experiment.

DATES: This interim rule is effective January 30, 2003. Applications for participation in the experiment will be available beginning February 3, 2003. The starting date for the experiment is April 20, 2003. Comments on the standards must be received on or before March 3, 2003.

ADDRESSES: Written comments should be mailed or delivered to the Manager, Mail Preparation and Standards, U.S. Postal Service, 1735 N. Lynn St., Room 3025, Arlington, VA 22209–6037. Copies of all written comments will be available for inspection and photocopying at USPS Headquarters Library, 475 L'Enfant Plaza, Washington, DC, between 9 a.m. and 4 p.m., Monday through Friday.

FOR FURTHER INFORMATION CONTACT: Joel Walker, 703–292–3652; *jwalke13@email.usps.gov.*

SUPPLEMENTARY INFORMATION: The Postal Service offers certain worksharing incentives in the form of discounts to encourage palletization and drop-shipping of Periodicals mailings. Co-palletization allows mailers to combine separately presorted bundles of different titles and editions on pallets to achieve the minimum pallet weight required to take advantage of current pallet and drop-shipment discounts for Periodicals mail (*e.g.*, 250 pounds of mail to a destination ADC). However, many publishers of small-circulation publications do not choose to take advantage of this opportunity due to the increased preparation costs associated with co-palletization. [**Note:** A group of flats presorted together to a common destination is currently defined as a ''package'' in the Domestic Mail Manual. However, packages in this context are usually referred to as ''bundles'' by the mailing industry, as well as many postal employees, and will be referred to as such throughout this document.]

Because mail prepared in sacks accounts for a disproportionate amount of the Postal Service's costs for processing Periodicals, the Postal Service designed an experiment to test whether an additional discount would encourage the co-palletization of mail that would otherwise be prepared in sacks. Eligibility requires the co-palletized mail to be prepared on ADC or SCF pallets that are drop-shipped to DADCs or DSCFs. The primary beneficiaries of this incentive should be smaller circulation publications, for which, in some cases, complete mailings are now in sacks. Some smaller portions of larger mailings (sometimes referred to as ''residual'' or ''tail of the mail''), as well as smaller circulation versions, editions, and supplemental mailings of large circulation publications could also qualify under the experiment. The objective of the additional discount is to move mail from origin-entered sacks to drop-shipped pallets.

On September 26, 2002, pursuant to 39 U.S.C. 3623, the Postal Service filed with the Postal Rate Commission a request for a decision recommending an experimental co-palletization classification, with associated discounts, for Outside-County Periodicals. The request was designated as Docket No. MC2002–3 by the Commission. The Commission recommended the experimental classification and discounts on December 20, 2002. This recommendation was approved by the Governors on January 6, 2003, and the Board of Governors set April 20, 2003, as the anticipated implementation date for the experiment, which is to last two years.

This experiment provides additional per-piece discounts to co-palletized Periodicals that cannot be palletized currently because of volume and density. The discounts will be available for pieces in Periodicals mailings and mailing segments that are currently prepared in sacks that, as a result of co-palletizaton, are prepared on ADC or SCF pallets and are drop-shipped to DADCs and DSCFs.

For mail that otherwise would have been prepared in sacks under the original presort for the mailing (before co-palletization), a new per-piece discount of $0.007 would be available for bundles on ADC and SCF pallets entered at destination ADCs. For SCF pallets drop-shipped to destination SCFs, the new per-piece discount would be $0.01. The discounts do not apply to mail prepared on any other pallet level. While mailers will be expected to prepare pallets of at least 250 pounds, the new discount would be available for pallets weighing less than 250 pounds. Less than 250-pound pallets (except overflow pallets) would not be eligible for the existing pallet discounts (*e.g.*, $0.015 for drop-shipped mail on pallets of 250 or more pounds).

Co-palletization will consist of bundles of mail that remain intact (before and after co-palletization) and are moved from sacks (before co-palletization) to either ADC or SCF pallets to be drop-shipped to the appropriate DADC or DSCF. Mail that moves from an ADC pallet before co-palletization (*e.g.*, 250 or more pounds to an ADC) to an SCF pallet as a result of co-palletization would not be entitled to either of the new discounts.

The following explains the Periodicals mail types that could be eligible for the experimental co-palletization discounts:

- Small circulation publications.
- Residual volume of independently presorted versions of publications, as well as editions of current issues of larger circulation publications for those destinations where there is insufficient volume to prepare an ADC pallet of at least 250 pounds.
- Supplemental mailings of large circulation publications.
- Multiple titles or multiple versions of a publication that are presorted together into bundles through a selective binding operation if movement of the presorted bundles (created as a result of selective binding) is from sacks to co-pallets.
- Mail that is combined in a co-mailing operation that moves from sacks (if titles or versions are sorted independently) onto pallets that are drop-shipped.

Co-palletized pieces with less than 250 pounds per title or edition per ADC destination, if independently presorted, could qualify for the co-palletization discounts. Co-palletized pieces with less that 250 pounds of mail per title or edition within an ADC remaining after preparing SCF pallets could qualify for the co-palletization discounts because this mail otherwise would have been prepared in sacks. Mailers may build upon originally presorted SCF and ADC pallets, but only the co-palletized pieces with less than 250 pounds per title or edition per ADC destination, if independently presorted, would qualify for the co-palletization discounts.

Other drop-ship and palletization incentives available on the current rate schedule would apply to all the pieces based on their eligibility (*e.g.*, drop-ship discounts and pallet discounts).

Because co-palletized volumes are difficult to predict, during the experiment co-palletized mail will not be required to be placed on the finest level pallet possible. For example, if a co-palletized ADC pallet contains more than 500 pounds to a particular SCF, an SCF pallet will not be required. Mailers and consolidators will be encouraged to periodically reevaluate mail volumes for SCF/ADC destinations to determine whether additional SCF pallets could be created on a regular basis to maximize presort and worksharing benefits.

The Postal Service recognizes that there is a relatively small volume of mail that is currently either co-palletized or co-mailed and drop-shipped. Consolidators who already drop-ship co-palletized volume are eligible for the additional discounts if the standards outlined below are met.

Documentation Requirements

The Postal Service will require documentation (summarized for each title and identified by edition, version, or segment) that profiles mailings before co-palletization, to substantiate that without co-palletization the mail would have been prepared in sacks (*e.g.*, ADC pallets of 250 or more pounds for any individual title, independently presorted version, or selectively bound pool, could not have been made). Supplemental mailings prepared after, and separate from, the original mailing, would be treated as a separate title and would have to meet the same requirements for pieces to be eligible for the additional discounts.

The mailer or consolidator must provide documentation of the mail both before and after co-palletization (*e.g.*, mail.dat files that can be printed, if necessary), relating only to the mail that is co-palletized. The ''before'' documentation must be in files that permit easy identification of mailings (*e.g.*, by job ID, segment ID, and container summary) included in the co-palletization program separate from mailings that are not included in the program. The ''after'' documentation must identify publications or segments with 250 or more pounds to an ADC on pallets (mail that does not qualify for added co-palletization incentives) separately from volumes of other publications or segments with less than 250 pounds that do qualify for the incentives. Documentation must be prepared by title and version, segment, or edition; or by codes representing each title or version, segment, or edition. The mailer or consolidator will output a new file for the mail after co-palletization showing how the mail was presorted and where it was entered. Data in the ''after'' co-palletization files must be easily reconciled with the ''before'' files to validate that proper postage has been paid for all pieces.

The Postal Service is issuing a new postage statement that includes the new co-palletization discounts. Periodicals mailers must use this postage statement for mailings that qualify for and claim the new discounts.

Publications mailed under the CPP program may be included as part of a co-palletized mailing. Publishers may elect to (1) remove the co-palletized portion of a mailing job from the CPP consolidated postage statement and pay postage at the consolidation point, or (2) provide, to the preparer of the consolidated postage statement, information about the co-palletized portion of their mailing to be included on the consolidated postage statement submitted to the New York Rates and Classification Service Center.

Publishers that co-palletize multiple editions of the same publication must submit a consolidated postage statement and register of mailings.

Data Reporting

Over the course of the experiment, mailers and consolidators must provide the Postal Service with appropriate data regarding publication titles that include pieces for which the discounts are claimed. The purpose of collecting these data is to provide a measure of the experiment's effectiveness. The Postal Service intends to provide participants with details regarding the frequency and methodology for data reporting prior to implementation of the experiment and expects to provide an easily accessible vehicle for reporting via the Internet or email.

Such data will, in aggregated form not identifying particular mailings or publications, be reported also to the Postal Rate Commission under the terms of its recommendation in Docket No. MC2002–3 and may be necessary for preparation of any request for future related permanent classification changes.

Participants must provide the following data to the Postal Service monthly in spreadsheet format (a model spreadsheet is shown in Exhibit A):

1. Number of titles receiving one or both of the co-palletization discounts.
2. Number of sacks that would have been prepared without co-palletization, as well as the weight and the number of addressed pieces that would have been in these sacks.
3. Number of pallets that would have been prepared without co-palletization, as well as the weight and the number of addressed pieces that would have been on pallets.
4. Number of sacks prepared after co-palletization, as well as the weight and the number of addressed pieces in these sacks.
5. Number of pallets containing mail qualifying for the ADC co-palletization discount (both new pallets and existing pallets built upon), as well as the weight and the number of addressed pieces receiving the ADC discount on both of these types of pallets.
6. Number of pallets containing mail qualifying for the SCF co-palletization discount (both new pallets and existing pallets built upon), as well as the weight and the number of addressed pieces receiving the SCF discount on both of these types of pallets.

Application Process

Parties interested in participating as consolidators in the experiment must request approval from the Postal Service. Requests must be sent to the Manager, Mail Preparation and Standards, at 1735 N. Lynn St., Room 3025, Arlington, VA 22209–6037. The request must be accompanied by the following information, which will be treated as confidential by the Postal Service:

1. A completed application form. Application forms will be available from the Manager, Mail Preparation and Standards, beginning February 3, 2003. Application forms may be requested via email to *jwalke13@email.usps.gov.*

2. A process map and narrative describing mail movement from production through the co-palletization process to dispatch to destination entry postal facilities.

3. Samples of presort documentation (before and after co-palletization), and a description of when and how presort documentation and postage statements are generated.

4. An explanation of how data for mailings included under the co-palletization experiment will be collected and reported to the Postal Service, including whether the model spreadsheet provided by the Postal Service can be used.

5. A list of the publications to be included in the test initially and evidence that each publication has obtained the appropriate authorizations at the office(s) where mailings will be verified and postage paid. If the applicant is not a printer and/or is consolidating publications for other printers, a list of these printers must also be included with the application. If the location where mail will be consolidated currently does not have a detached mail unit (DMU), arrangements must be made to establish one with the local post office responsible for the acceptance and verification of mailings.

Requests to participate will be accepted beginning February 10, 2003. Applicants meeting all requirements for the co-palletization test will receive a 90-day conditional authorization. Final approval will be given after the successful completion of the 90-day conditional period.

The effective date of implementation is April 20, 2003.

Accordingly, the Postal Service hereby adopts the following regulations on an interim basis. Although exempt from the notice and comment requirements of the Administrative Procedure Act (5 U.S.C. 410 (a)), the Postal Service invites comments on the following revisions to the Domestic Mail Manual, incorporated by reference in the Code of Federal Regulations. *See* 39 CFR part 111.

PART 111—[AMENDED]

1. The authority citation for 39 CFR part 111 continues to read as follows:

Authority: U.S.C. 552(a); 39 U.S.C. 101, 401, 403, 404, 414, 3001–3011, 3201–3219, 3403–3406, 3621, 3626, 5001.

2. Amend the following sections of the Domestic Mail Manual (DMM) as set forth below:

G General Information

G000 The USPS and Mailing Standards

* * * * *

G090 Experimental Classifications and Rates

* * * * *

[Add new G092 to read as follows:]

G092 Outside-County Periodicals Co-Palletization Drop-Ship Classification

1.0 ELIGIBILITY

1.1 Description

The standards in G092 apply to mailings that are produced by mailers and consolidators who are approved to participate in the Outside-County Periodicals Co-Palletization Drop-Ship Classification experiment.

1.2 Rate Application

The Outside-County Co-Palletization Drop-Ship Classification discounts apply to pieces meeting the standards in G092.

1.3 Basic Standards

The basic standards for co-palletized mailings are as follows:

a. Each mailing must consist of at least two different Periodicals publications or two different editions, segments, or versions of a Periodicals publication.

b. Each mailing must be presented with the correct postage statement(s). Mailings consisting of different Periodicals publications must be accompanied by a separate postage statement for each publication. Mailings consisting of different editions or versions of the same Periodicals publication must be accompanied by one consolidated postage statement and a register of mailings.

c. Each mailing must meet the documentation and postage payment standards outlined in 2.0 and P200.

d. Each mailing must be entered and postage paid at the post office where consolidation takes place, except that postage for publications authorized under the Centralized Postage Payment (CPP) system may be paid to the New York Rates and Classification Center (RCSC). Each publication included in a mailing under these standards must be authorized for original entry or additional entry at the post office where the consolidated mailing is entered.

1.4 Discount Eligibility

To be eligible for one of the discounts, mailpieces must be:

a. Part of a Periodicals mailing meeting the standards in M200, M820, or M900.

b. Part of a mailing segment with less than 250 pounds per title or version per ADC destination, if independently presorted. This includes mail for an ADC service area that remains after finer levels of pallets are prepared.

c. Prepared as bundles (packages) on pallets under M041 and M045, or under M900.

d. Prepared on either an ADC or SCF pallet of co-palletized pieces. Mailers may build on ADC or SCF pallets of 250 or more pounds prepared as part of the original presort. However, the pieces originally on these pallets (250 or more pounds per title or edition) do not qualify for the co-palletization discounts.

e. Drop-shipped to the appropriate DADC or DSCF.

2.0 DOCUMENTATION

Each mailing must be accompanied by documentation meeting the standards in P012, as well as any other mailing information requested by the Postal Service to support the postage claimed (e.g., advertising percentage and weight per copy). Documentation must be presented by title and version, segment, or edition; or by codes representing each title and version, segment, or edition included in the co-palletized mailing. In addition, documentation for the co-palletized mailing must:

a. Upon request, include presort reports showing how the pieces would have been prepared prior to co-palletization.

b. Include presort and pallet reports showing how the co-palletized pieces are prepared and where they will be entered (DADC or DSCF).

c. Distinguish publications or segments that do not qualify for the co-palletization discounts (*e.g.*, because there are 250 or more pounds to an ADC destination) from those that do qualify for the discounts.

d. Allow easy reconciliation with reports prepared to reflect how mail would have been prepared prior to co-

palletization if requested to verify compliance with standards for discount eligibility.

e. Provide the following data in spreadsheet format (using the model spreadsheet provided by the Postal Service):

(1) Number of titles receiving one or both of the co-palletization discounts.

(2) Number of sacks that would have been prepared without co-palletization, as well as the weight and the number of addressed pieces that would have been in these sacks.

(3) Number of pallets that would have been prepared without co-palletization, as well as the weight and the number of addressed pieces that would have been prepared on pallets.

(4) Number of sacks prepared after co-palletization, as well as the weight and the number of addressed pieces in these sacks.

(5) Number of pallets containing mail qualifying for the ADC co-palletization discount, as well as the weight and the number of addressed pieces receiving the ADC discount on these pallets.

(6) Number of pallets containing mail qualifying for the SCF co-palletization discount, as well as the weight and the number of addressed pieces receiving the SCF discount on these pallets.

3.0 DISCOUNTS

The following discounts are available:

a. For pieces sorted to an SCF or ADC pallet of 250 or more pounds and drop-shipped to the appropriate DADC: $0.007 per piece.

b. For pieces sorted to an SCF pallet of 250 or more pounds and drop-shipped to the appropriate DSCF: $0.01 per piece.

c. Co-palletized pieces sorted to overflow DSCF or DADC pallets qualify for the corresponding co-palletization discount.

d. Co-palletized pieces sorted to ADC pallets weighing between 100 and 250 pounds and drop-shipped to the appropriate DADC: $0.007per piece.

4.0 REQUEST TO PARTICIPATE

A mailer or consolidator may request approval to mail in the experimental Outside-County Periodicals Co-Palletization Drop-Ship test by submitting a written request to the Manager, Mail Preparation and Standards. The request must be accompanied by the following:

a. A completed application form (available from the Manager, Mail Preparation and Standards).

b. A process map and narrative demonstrating how and where presort and co-palletization reports (including ''before'' and ''after'' data) are created as they relate to mail movement and consolidation of packages to be co-palletized. The map and narrative must also describe mail movement from production through the co-palletization process to dispatch to destination entry postal facilities.

c. Samples of all required documentation that must be provided at the time of mailing, including ''before'' and ''after'' reports and postage statements. The sample reports must demonstrate:

(1) How the co-palletized portion of the mailing is segregated from other mailing segments on the ''before'' reports.

(2) How mailing jobs, mailing segments, and containers will be identified in both ''before'' and ''after'' reports to allow reconciliation of the reports.

(3) How pieces appearing on the ''after'' reports that qualify for the co-palletization discounts (mailing segments with less than 250 pounds to an ADC) are differentiated from those that do not (mailing segments with 250 or more pounds to an ADC).

d. An explanation of how data for mailings included under the co-palletization experiment will be collected and reported to the Postal Service, including whether the model spreadsheet provided by the Postal Service can a copy of the spreadsheet that will be used.

e. An initial list of the publications to be included in the test and evidence that each publication has obtained the appropriate additional entry authorizations at the office where mailings will be verified and postage paid. The list must indicate if the publications are authorized under the Centralized Postage Payment (CPP) System. If the applicant is not a printer and/or is consolidating publications for other printers, a list of these printers must be included with the application.

5.0 DECISION ON REQUEST

The Manager, Mail Preparation and Standards, approves or denies a written request to participate in the experimental Outside-County Periodicals Co-Palletization Drop-Ship Classification test. If the application is approved, the mailer or consolidator will be notified in writing by the Manager, Mail Preparation and Standards. Initial approval is for a conditional 90-day period. When the mailer or consolidator has demonstrated the ability to prepare and enter mailings under the standards in G092, final authorization will be granted. If the application is denied, the mailer or consolidator may file at a later date or submit additional information needed to support the request.

6.0 POSTAL SERVICE SUSPENSION

The Manager, Mail Preparation and Standards, may suspend at any time an approval to participate in the experiment when there is an indication that postal revenue is not fully protected. The manager will notify the participant in writing of the decision. The suspension becomes effective upon the mailer's receipt of the notification.

* * * * *

An appropriate amendment to 39 CFR 111 to reflect the changes will be published if the interim rule becomes final.

Neva R. Watson,

Attorney, Legislative.

BILLING CODE 7710–12–P

Exhibit A

Co-Palletization Report to be filed by each participant

No. of New Titles in Run*	

	Without Co-palletization			With Co-palletization					
					New Pallets		Existing Pallets Built Upon		
	Sacked	Palletized	Total	Sacked	ADC Pallets	SCF Pallets	ADC Pallets	SCF Pallets	Total
No. of Containers			-						-
Weight (lbs.)			-						-
Addressed Pieces			-						-

*For the first report in each 6-month period (for which the Postal Service reports data) each participant (cosolidator/printer) will be asked to provide the number of titles that are co-palletized & dropshipped. For each new run, only the number of new titles (not previously co-palletized) will be reported.

Note: Sacked volume before co-palletization should equal the total volume after Co-palletization

[FR Doc. 03–2198 Filed 1–29–03; 8:45 am]

BILLING CODE 7710–12–C

DEPARTMENT OF TRANSPORTATION

Bureau of Transportation Statistics

49 CFR Part 1420

[Docket No. BTS–2003–14317]

RIN Number 2139–AA10

Reports of Motor Carriers—Correction of Obsolete References and Minor Editorial Corrections

AGENCY: BTS, DOT.

ACTION: Final rule.

SUMMARY: The BTS is amending its regulation to eliminate obsolete agency references to the Interstate Commerce Commission and to make other minor editorial corrections that will improve the clarity of its regulations. This action is taken on BTS' initiative.

EFFECTIVE DATE: This rule is effective January 30, 2003.

FOR FURTHER INFORMATION CONTACT: Russell B. Capelle, Jr., Ph.D., Assistant BTS Director for Motor Carrier Information, Department of Transportation, 400 7th Street, SW., Washington, DC 20590; (202) 366–5685; e-mail: *russ.capelle@bts.gov* or Paula Robinson at (202) 366–2984; e-mail: *paula.robinson@bts.gov.*

SUPPLEMENTARY INFORMATION:

Electronic Access

An electronic copy of this document may be downloaded by using a computer, modem, and suitable communications software from the Government Printing Office's Electronic Bulletin Board Services at (202) 512–1661. Internet users may reach the Office of the Federal Register's home page at: *http://www.nara.gov/fedreg* and the Government Printing Office's database at: *http://www.access.gpo.gov/nara.* You can also view and download this document by going to the webpage of the Department's Docket Management System (*http://dms.dot.gov/*). On that page, click on ''search.'' On the next page, type the last five digits of the docket number shown in the heading of this document. Then click on ''search.''

The public should be aware that anyone can search the electronic form of all comments received in the Department's Docket Management System by using the name of the individual submitting the comment (or signing the comment, if submitted on behalf of an association, business, labor union, *etc.*). You may review DOT's complete Privacy Act Statement in the **Federal Register** published on April 11, 2000 (Volume 65, Number 70; Pages 19477–78) or you may visit *http://dms.dot.gov.*

Background

The ICC Termination Act of 1995 (ICCTA) abolished the Interstate Commerce Commission (ICC) and transferred certain ICC functions to the Secretary of Transportation. The authority for the collection and dissemination of motor carrier financial information was transferred to the Secretary of Transportation under 49 U.S.C. 14123 and BTS' implementing regulations (49 CFR part 1420). The Secretary of Transportation delegated this responsibility to the BTS. This rule removes all references to the ICC and amends the regulatory language in 49 CFR part 1420 to reflect the delegation to BTS. The final rule also makes other minor editorial corrections to improve the clarity of the regulations.

Executive Order 12866 and DOT Regulatory Policies and Procedures

This rule is not a significant regulatory action under section 3(f) of E. O. 12866. Therefore, it has not been reviewed by the Office of Management and Budget under that order. It is not significant under the regulatory policies and procedures of the Department of Transportation (DOT) (44 FR 11040, February 26, 1979). Because this rule is editorial in nature and involves no costs or burdens, BTS has not prepared an economic evaluation.

Executive Order 12612 (Federalism)

These amendments have been analyzed in accordance with the principles and criteria contained in E.O. 12612. The BTS has determined that the amendments do not have sufficient federalism implications to warrant the preparation of a Federalism Assessment. Because this rule is editorial in nature and involves no costs or burdens, the amendments will not have a substantial direct effect on the States, on the relationship between the national government and the States, or on the distribution of power and responsibilities among the various levels of government.

Regulatory Flexibility Act Analysis

The Regulatory Flexibility Act (5 U.S.C. 601 *et seq.*) requires an agency to review its regulations to assess their impact on small entities unless the agency determines that a rule is not expected to have a significant impact on a substantial number of small entities. The changes in this direct final rule do not increase or decrease the data collected under Part 1420, the changes are editorial in nature and the purpose of the rule is to remove obsolete references. Thus, based on the above discussion, I certify this rule will not have a significant economic impact on a substantial number of small entities.

Unfunded Mandates Reform Act

This rule does not impose unfunded mandates under the Unfunded Mandates Reform Act of 1995. It does not result in costs of $100 million or more to either State, local, or tribal governments, in the aggregate, or to the private sector.

Environmental Assessment

The amendments in this final rule do not increase or decrease the data collected under part 1420, the changes are editorial in nature and the purpose of the rule is to remove obsolete references. Therefore, we find that these amendments will have no impact on the quality of the human environment.

Paperwork Reduction Act Analysis

There are no reporting or recordkeeping requirements associated with this final rule.

Regulation Identifier Number

A regulation identifier number (RIN) is assigned to each regulatory action listed in the Unified Agenda of Federal Regulations. The Regulatory Information Service Center publishes the Unified Agenda in April and October of each year. The RIN number 2139–AA10 contained in the heading of this document can be used to cross-reference this action with the Unified Agenda.

Notice and Opportunity for Public Comment Is Unnecessary

Under the Administrative Procedure Act (5 U.S.C. section 553), the BTS has determined that notice and an opportunity for public comment are unnecessary and contrary to the public interest. Because the amendments made in this final rule are ministerial and will have no substantive impact on the public, the rule is effective upon publication.

Regulatory Text

Accordingly, the Bureau of Transportation Statistics, under delegated authority pursuant to 49 CFR part 1, amends 49 CFR part 1420 as follows:

List of Subjects in 49 CFR Part 1420

Motor carriers, Reporting and recordkeeping requirements.

PART 1420—[AMENDED]

1. The authority citation for Part 1420 continues to read as follows:

Authority: 49 U.S.C. 14123.

2. The note following the authority citation for the Part is removed.

§ 1420.2 [Amended]

3. Section 1420.2, paragraph (b)(1), is amended by removing the word ''effected,'' and, in its place, adding the word ''effective''.

4. Section 1420.2, paragraph (b)(5), is amended by removing the words ''Annual Carrier Classification Survey Form'' and, in their place, adding the words ''Worksheet for Calculating Carrier Classification''.

§ 1420.3 [Amended]

5. Section 1420.3, paragraph (a), is amended by removing the words ''subject to the Interstate Commerce Act.''

6. Section 1420.3, paragraph (b)(1), is amended by removing the word ''effected,'' and, in its place, adding the word ''effective''.

7. Section 1420.3, paragraph (b)(4), is amended by removing the words ''the Commission'', each time they appear, and in their place, adding the words ''the BTS''; removing the phrase ''Class I'' and, in its place, adding ''Class II'; and removing the words ''the Bureau of Accounts, Interstate Commerce Commission, Washington, DC 20423'' and, in their place, adding the words ''the Bureau of Transportation Statistics at the address in § 1420.6''.

8. Section 1420.3, paragraph (c) is amended by removing the words ''the Commission'', and in their place, adding the words ''the BTS''.

§ 1420.4 [Amended]

9. Section 1420.4, paragraph (b), is amended by removing the words ''the Commission'', each time they appear, and, in their place, adding the words ''the BTS''.

10. Section 1420.4, paragraph (c), is amended by removing the words ''The Bureau of Accounts, Interstate Commerce Commission, Washington, DC 20423'', and in their place, adding the words ''the Bureau of Transportation Statistics at the address in § 1420.6'' and, in the paragraph's final sentence, removing the words ''the Bureau of Accounts'' and in their place, adding the words ''the BTS''.

§ 1420.6 [Amended]

11. Section 1420.6 is amended by removing the designation ''K–27'' and, in its place, adding ''K–13''.

12. Section 1420.10, paragraph (a), is amended by removing the word ''other'' and, in its place, adding the word ''otherwise''.

§ 1420.11 [Amended]

13. Section 1420.11, is amended by removing the words ''as defined in § 1240.4 of this chapter, subject to part II of the Interstate Commerce Act'' and adding the words § as defined in § 1420.3(a)''; removing the words ''motor carrier Quarterly Report of Revenues, Expenses, and Statistics (class I carriers of passengers), form QPA.'' and, in their place, adding the words ''Motor Carrier Quarterly and Annual Report, Form MP–1.''; and removing the words ''the Bureau of Accounts, Interstate Commerce Commission, Washington, DC 20423'' and, in their place, adding the words ''the Bureau of Transportation Statistics at the address in § 1420.6''.

Issued in Washington, DC, on January 22, 2003.

Russell B. Capelle, Jr.,

Assistant BTS Director for Motor Carrier Information, Bureau of Transportation Statistics.

[FR Doc. 03–2062 Filed 1–29–03; 8:45 am]

BILLING CODE 4910–FE–P

DEPARTMENT OF COMMERCE

National Oceanic and Atmospheric Administration

50 CFR Part 660

[Docket No. 021209299–2299–01; I.D. 112502B]

Magnuson-Stevens Act Provisions; Fisheries off the West Coast States and in the Western Pacific; Pacific Coast Groundfish Fishery; Groundfish Fishery Management Measures; Correction

AGENCY: National Marine Fisheries Service (NMFS), National Oceanic and Atmospheric Administration (NOAA), Commerce.

ACTION: Emergency rule; correction.

SUMMARY: This document contains corrections to the emergency rule published on January 7, 2003 for the Pacific Coast groundfish fishery.

DATES: Effective January 27, 2003 through February 28, 2003.

FOR FURTHER INFORMATION CONTACT: Jamie Goen or Carrie Nordeen (NMFS, Northwest Region), 206–526–6140.

SUPPLEMENTARY INFORMATION: The specifications and management measures for the 2003 fishing year (January 1 through December 31, 2003) are initially being published in the **Federal Register** as an emergency rule for January 1 through February 28, 2003 (68 FR 908, January 7, 2003), and as a proposed rule for March 1 through December 31, 2003 (68 FR 936, January 7, 2003). The final rule for March 1 through December 31, 2003, will be published in the **Federal Register** after the public comment period ends on February 7, 2003.

Management measures for the Pacific Coast groundfish fishery, effective January 1 through February 28, 2003 (68 FR 908, January 7, 2003), contained errors in the trawl trip limit tables, errors in management area coordinates for both commercial and recreational fisheries, and technical errors that require correction.

The limited entry trawl trip limit table, Table 3 (North)- line 23, is corrected to clarify the yellowtail rockfish small footrope trawl trip limit north of 40°10′ N. latitude (lat.). The original language was confusing, and this correction adds a section to emphasize the limits to the amount of yellowtail that can be harvested if it's not associated with flatfish. Coastwide, the whiting trip limits, Table 3 (North)- line 14 and Table 3 (South)- line 18, are corrected to allow only mid-water trawling for Pacific whiting inside the rockfish conservation area (RCA) during the primary season (May through August). This is because harvest of whiting outside of the primary season is only allowed as an incidental catch in other groundfish fisheries, which are not supposed to occur in the RCA. Regulatory language for the recreational groundfish fishery off California is corrected to prohibit the retention of bocaccio, canary rockfish, yelloweye rockfish and cowcod in the Rockfish, Cabezon, Greenling Complex (RCG Complex) bag limits south of 40°10′ N. lat. This prohibition was explained in the preamble to the proposed rule, which was published in the same issue of the **Federal Register** with the emergency rule which this rule corrects. The emergency rule crossed referenced the proposed rule for the rationale for the management measures.

Coordinates for the following lines are corrected in this notice: the 50–fm (91–m) depth contour used between 40°10′ N. lat. and 34°27′ N. lat. as an eastern boundary for the trawl RCA in the months of January and February; the 60–fm (110–m) depth contour used between 40°10′ N. lat. and 34°27′ N. lat. as an eastern boundary for the trawl RCA in March through October; the 100–fm (183–m) depth contour used north of 40°10′ N. lat. as an eastern

boundary for the trawl RCA and as a western boundary for the non-trawl RCA; the 100–fm (183–m) depth contour used between 34°27′ N. lat. and the U.S. border with Mexico as an eastern boundary for the trawl RCA; the 150–fm (274–m) depth contour used between 40°10′ N. lat. and the U.S. border with Mexico as a western boundary for the trawl RCA and used between 38° N. lat. and the U.S. border with Mexico as a western boundary for the non-trawl RCA; and the Winter Petrale Boundary (explained at 68 FR, 936, January 7, 2003) used north of 38° N. lat. as a western boundary for the trawl RCA and modified to allow fishing for petrale in winter months of January, February, November, and December.

The Yelloweye Rockfish Conservation Area (YRCA), an ''L-shaped'' area off Washington closed to recreational fishing for groundfish and halibut, is corrected to read an ''L-shaped'' rather than a ''C-shaped'' area. The YRCA is proposed to become a ''C-shaped'' area from March - December 2003 (68 FR 936, January 7, 2003). The YRCA coordinates are also corrected by rearranging them to read consecutively in the right order from top to bottom.

Technical Corrections

The emergency rule for January 1 through February 28, 2003 (68 FR 908, January 7, 2003), contained errors in references to regulatory section 50 CFR 660.304. The 2003 emergency rule specifications and management measures should refer to the Cowcod Conservation Areas (CCAs) in § 660.304(i) not in § 660.304(c).

This document corrects the errors and re-publishes the limited entry trawl trip limit tables (Table 3 (North) and Table 3 (South)).

Corrections

In the rule FR Doc. 02–32755, in the issue of Tuesday, January 7, 2003 (68 FR 908), under IV. NMFS Actions, make the following corrections:

Under A. General Definitions and Provisions:

1. On page 912, in columns 2 and 3, paragraphs (19)(a) and (b) are corrected to read as follows:

* * * * *

(19) * * *

(a) *Yelloweye Rockfish Conservation Area.* Recreational fishing for groundfish is prohibited within the YRCA. It is unlawful for recreational fishing vessels to take, retain, possess, or land groundfish inside the YRCA. The YRCA is an ''L-shaped'' area off the northern Washington coast that is bound by straight lines connecting all of the following points in the order listed:

48°18′ N. lat., 125°18′ W. long.;
48°18′ N. lat., 125°11′ W. long.;
48°04′ N. lat., 125°11′ W. long.;
48°04′ N. lat., 124°59′ W. long.;
48°00′ N. lat., 124°59′ W. long.;
48°00′ N. lat., 125°18′ W. long.;

and connecting back to 48°18′ N. lat., 125°18′ W. long.

(b) *Cowcod Conservation Areas.* The coordinates of the Cowcod Conservation Areas (CCAs) are defined at § 660.304(i). Recreational and commercial fishing for groundfish is prohibited within the CCAs, except that recreational and commercial fishing for rockfish and lingcod is permitted in waters inside 20 fathoms (36.9 m). It is unlawful to take and retain, possess, or land groundfish inside the CCAs, except for rockfish and lingcod taken in waters inside the 20–fathom (36.9 m) depth contour, when those waters are open to fishing. Commercial fishing vessels may transit through the Western CCA with their gear stowed and groundfish on board only in a corridor through the Western CCA bounded on the north by the latitude line at 33°00′30'' N. lat., and bounded on the south by the latitude line at 32°59′30'' N. lat.

* * * * *

2. On page 914, in column 3, line 49, number (81) is corrected to read as follows:

''(81) 46°17.52′ N. lat., 124°35.35′ W. long.;''

3. On page 917, in column 3, paragraph (19)(e)(v) introductory text and on page 918, paragraphs (109) through (129) are corrected and paragraphs (130) through (150) are correctly added to read as follows:

* * * * *

(e) * * *

(v) The Winter Petrale Boundary used north of 38° N. lat. as a western boundary for the trawl RCA, modified to allow fishing for petrale in winter months of January, February, November, and December, is defined by straight lines connecting all of the following points in the order stated:

* * * * *

(109) 41°47.79′ N. lat., 124°29.52′ W. long.;
(110) 41°21.00′ N. lat., 124°29.00′ W. long.;
(111) 41°11.00′ N. lat., 124°23.00′ W. long.;
(112) 41°5.00′ N. lat., 124°23.00′ W. long.;
(113) 40°54.00′ N. lat., 124°26.00′ W. long.;
(114) 40°50.00′ N. lat., 124°26.00′ W. long.;
(115) 40°44.51′ N. lat., 124°30.83′ W. long.;
(116) 40°40.61′ N. lat., 124°32.06′ W. long.;
(117) 40°37.36′ N. lat., 124°29.41′ W. long.;
(118) 40°35.64′ N. lat., 124°30.47′ W. long.;
(119) 40°37.43′ N. lat., 124°37.10′ W. long.;
(120) 40°36.00′ N. lat., 124°40.00′ W. long.;
(121) 40°31.59′ N. lat., 124°40.72′ W. long.;
(122) 40°24.64′ N. lat., 124°35.62′ W. long.;
(123) 40°23.00′ N. lat., 124°32.00′ W. long.;
(124) 40°23.39′ N. lat., 124°28.70′ W. long.;
(125) 40°22.28′ N. lat., 124°25.25′ W. long.;
(126) 40°21.90′ N. lat., 124°25.17′ W. long.;
(127) 40°22.00′ N. lat., 124°28.00′ W. long.;
(128) 40°21.35′ N. lat., 124°29.53′ W. long.;
(129) 40°19.75′ N. lat., 124°28.98′ W. long.;
(130) 40°18.15′ N. lat., 124°27.01′ W. long.;
(131) 40°17.45′ N. lat., 124°25.49′ W. long.;
(132) 40°18.00′ N. lat., 124°24.00′ W. long.;
(133) 40°16.00′ N. lat., 124°26.00′ W. long.;
(134) 40°17.00′ N. lat., 124°35.00′ W. long.;
(135) 40°16.00′ N. lat., 124°36.00′ W. long.;
(136) 40°10.00′ N. lat., 124°22.75′ W. long.;
(137) 40°03.00′ N. lat., 124°14.75′ W. long.;
(138) 39°49.25′ N. lat., 124°06.00′ W. long.;
(138) 39°34.75′ N. lat., 123°58.50′ W. long.;
(140) 39°03.07′ N. lat., 123°57.81′ W. long.;
(141) 38°52.25′ N. lat., 123°56.25′ W. long.;
(142) 38°41.42′ N. lat., 123°46.75′ W. long.;
(143) 38°39.47′ N. lat., 123°46.59′ W. long.;
(144) 38°35.25′ N. lat., 123°42.00′ W. long.;
(145) 38°19.97′ N. lat., 123°32.95′ W. long.;
(146) 38°15.00′ N. lat., 123°26.50′ W. long.;
(147) 38°08.09′ N. lat., 123°23.39′ W. long.;
(148) 38°10.08′ N. lat., 123°26.82′ W. long.;
(149) 38°04.08′ N. lat., 123°32.12′ W. long.; and
(150) 38°00.00′ N. lat., 123°29.85′ W. long.

* * * * *

4. On page 919,

a. In column 1, the last two lines, number (34) is corrected to read as follows:

''(34) 34°27.00′ N. lat., 120°36.00′ W. long.;''

b. In column 3, line 3, number (34) is corrected to read as follows:

''(34) 34°27.00′ N. lat., 120°36.00′ W. long.;''

c. In column 3, line 12, number (1) is corrected to read as follows:

''(1) 34°27.00′ N. lat., 120°39.00′ W. long.;''

5. On page 920, in column 1, line 9, paragraph (19)(e)(ix) is corrected to read as follows:

* * * * *

(e) * * *

(ix) The 150–fm (274–m) depth contour used between 40°10′ N. lat. and the U.S. border with Mexico as a western boundary for the trawl RCA and used between 38° N. lat. and the U.S. border with Mexico as a western boundary for the non-trawl RCA is defined by straight lines connecting all of the following points in the order stated:

(1) 40°10.01′ N. lat., 124°22.90′ W. long.;

(2) 40°7.00′ N. lat., 124°19.00′ W. long.;

(3) 40°8.10′ N. lat., 124°16.70′ W. long.;

(4) 40°5.90′ N. lat., 124°17.77′ W. long.;

(5) 40°1.46′ N. lat., 124°12.85′ W. long.;

(6) 40°4.32′ N. lat., 124°10.33′ W. long.;

(7) 40°3.21′ N. lat., 124°8.83′ W. long.;

(8) 40°1.33′ N. lat., 124°8.70′ W. long.;

(9) 39°58.51′ N. lat., 124°12.44′ W. long.;

(10) 39°55.73′ N. lat., 124°7.49′ W. long.;

(11) 39°34.75′ N. lat., 123°58.50′ W. long.;

(12) 39°03.07′ N. lat., 123°57.81′ W. long.;

(13) 38°54.00′ N. lat., 123°57.00′ W. long.;

(14) 38°08.09′ N. lat., 123°23.39′ W. long.;

(15) 38°10.08′ N. lat., 123°26.82′ W. long.;

(16) 38°04.08′ N. lat., 123°32.12′ W. long.;

(17) 37°59.73′ N. lat., 123°29.85′ W. long.;

(18) 37°51.46′ N. lat., 123°25.16′ W. long.;

(19) 37°44.06′ N. lat., 123°11.44′ W. long.;

(20) 37°35.26′ N. lat., 123°2.29′ W. long.;

(21) 37°14.00′ N. lat., 122°50.00′ W. long.;

(22) 37°1.00′ N. lat., 122°36.00′ W. long.;

(23) 36°58.07′ N. lat., 122°28.35′ W. long.;

(24) 37°0.71′ N. lat., 122°24.53′ W. long.;

(25) 36°57.50′ N. lat., 122°24.98′ W. long.;

(26) 36°58.38′ N. lat., 122°21.85′ W. long.;

(27) 36°55.85′ N. lat., 122°21.95′ W. long.;

(28) 36°52.86′ N. lat., 122°12.89′ W. long.;

(29) 36°48.71′ N. lat., 122°9.28′ W. long.;

(30) 36°46.65′ N. lat., 122°4.10′ W. long.;

(31) 36°51.00′ N. lat., 121°58.00′ W. long.;

(32) 36°44.00′ N. lat., 121°59.00′ W. long.;

(33) 36°38.00′ N. lat., 122°2.00′ W. long.;

(34) 36°26.00′ N. lat., 121°59.50′ W. long.;

(35) 36°22.00′ N. lat., 122°1.00′ W. long.;

(36) 36°19.00′ N. lat., 122°5.00′ W. long.;

(37) 36°14.00′ N. lat., 121°58.00′ W. long.;

(38) 36°10.61′ N. lat., 121°44.51′ W. long.;

(39) 35°50.53′ N. lat., 121°29.93′ W. long.;

(40) 35°46.00′ N. lat., 121°28.00′ W. long.;

(41) 35°38.94′ N. lat., 121°23.16′ W. long.;

(42) 35°26.00′ N. lat., 121°8.00′ W. long.;

(43) 35°7.42′ N. lat., 120°57.08′ W. long.;

(44) 34°42.00′ N. lat., 120°54.00′ W. long.;

(45) 34°29.00′ N. lat., 120°44.00′ W. long.;

(46) 34°22.00′ N. lat., 120°32.00′ W. long.;

(47) 34°21.00′ N. lat., 120°21.00′ W. long.;

(48) 34°24.00′ N. lat., 120°15.00′ W. long.;

(49) 34°22.11′ N. lat., 119°56.63′ W. long.;

(50) 34°19.00′ N. lat., 119°48.00′ W. long.;

(51) 34°15.00′ N. lat., 119°48.00′ W. long.;

(52) 34°8.00′ N. lat., 119°37.00′ W. long.;

(53) 34°7.00′ N. lat., 120°11.00′ W. long.;

(54) 34°13.00′ N. lat., 120°30.00′ W. long.;

(55) 34°9.00′ N. lat., 120°38.00′ W. long.;

(56) 33°58.00′ N. lat., 120°29.00′ W. long.;

(57) 33°51.00′ N. lat., 120°9.00′ W. long.;

(58) 33°38.00′ N. lat., 119°58.00′ W. long.;

(59) 33°38.00′ N. lat., 119°50.00′ W. long.;

(60) 33°46.25′ N. lat., 119°49.32′ W. long.;

(61) 33°53.82′ N. lat., 119°53.42′ W. long.;

(62) 33°59.00′ N. lat., 119°21.00′ W. long.;

(63) 34°2.00′ N. lat., 119°13.00′ W. long.;

(64) 34°1.52′ N. lat., 119°4.50′ W. long.;

(65) 33°58.83′ N. lat., 119°3.76′ W. long.;

(66) 33°56.55′ N. lat., 118°40.50′ W. long.;

(67) 33°51.00′ N. lat., 118°38.00′ W. long.;

(68) 33°39.63′ N. lat., 118°18.75′ W. long.;

(69) 33°35.44′ N. lat., 118°17.57′ W. long.;

(70) 33°31.98′ N. lat., 118°12.59′ W. long.;

(71) 33°33.25′ N. lat., 117°54.15′ W. long.;

(72) 33°31.43′ N. lat., 117°49.84′ W. long.;

(73) 33°16.53′ N. lat., 117°36.13′ W. long.;

(74) 33°6.51′ N. lat., 117°24.11′ W. long.;

(75) 32°54.11′ N. lat., 117°21.45′ W. long.;

(76) 32°46.15′ N. lat., 117°24.26′ W. long.;

(77) 32°41.97′ N. lat., 117°22.10′ W. long.;

(78) 32°39.00′ N. lat., 117°28.13′ W. long.; and

(79) 32°34.84′ N. lat., 117°24.62′ W. long.

* * * * *

Under B. Limited Entry Fishery:

6. On pages 924–925, Table 3 (North) and Table 3 (South) are corrected to read as follows:

BILLING CODE 3510–22–S

Table 3 (North). Trip Limits and Gear Requirements[1/] for Limited Entry Trawl Gear North of 40°10' N. Latitude[2/]

Other Limits and Requirements Apply -- Read Sections A. and B. of NMFS Actions before using this table

		JAN-FEB	MAR-APR	MAY-JUN	JUL-AUG	SEP-OCT	NOV-DEC
	Rockfish Conservation Area[10/] (RCA):	100 fm - 250 fm (line modified to incorporate petrale sole fishing grounds)	100 fm - 250 fm		75 fm - 250 fm	100 fm - 250 fm	100 fm - 250 fm (line modified to incorporate petrale sole fishing grounds)
	Small footrope is required shoreward of the RCA; both large and small footropes are permitted seaward of the RCA. Only one type of trawl gear is allowed on board a vessel at any one time.						
1	**Minor slope rockfish[3/]**	1,800 lb/ 2 months					
2	**Pacific ocean perch**	3,000 lb/ 2 months					
3	**DTS complex**						
4	Sablefish	6,000 lb/ 2 months		7,000 lb/ 2 months			6,000 lb/ 2 months
5	Longspine thornyhead	8,000 lb/ 2 months	9,000 lb/ 2 months				7,000 lb/ 2 months
6	Shortspine thornyhead	2,300 lb/ 2 months	2,400 lb/ 2 months				2,200 lb/ 2 months
7	Dover sole	26,000 lb/ 2 months		25,000 lb/ 2 months			26,000 lb/ 2 months
8	**Flatfish**						
9	All other flatfish[4/]	100,000 lb/ 2 months	100,000 lb/ 2 months, no more than 30,000 lb/ 2 months of which may be petrale sole				100,000 lb/ 2 months
10	Petrale sole	Not limited					Not limited
11	Rex sole	Included in all other flatfish					
12	Arrowtooth flounder	30,000 lb/ trip	60,000 lb/ 2 months; 7,500 lb/ trip				30,000 lb/ trip
13	**Whiting[5/]**						
14	mid-water trawl	20,000 lb/ trip		Primary Season - (mid-water trawling permitted in the RCA)		10,000 lb/ trip	
15	**Other Fish[9/]**	Not limited					
16	**Use of small footrope bottom trawl[7/] or mid-water trawl is required for landing all of the following species:**						
17	**Minor shelf rockfish and widow rockfish[3/]**	300 lb/ month		1,000 lb/ month, no more than 200 lb/ month of which may be yelloweye rockfish			300 lb/ month
18	**Widow rockfish - mid-water trawl**						
19	mid-water trawl - permitted within the RCA	CLOSED[6/]		During primary whiting season, in trips of at least 10,000 lb of whiting: combined widow and yellowtail limit of 500 lb/ trip, cumulative widow limit of 1,500 lb/ month		CLOSED[6/]	12,000 lb/ 2 months
20	**Canary rockfish**	100 lb/ month		300 lb/ month		100 lb/ month	
21	**Yellowtail**						
22	mid-water trawl - permitted within the RCA	CLOSED[6/]		During primary whiting season, in trips of at least 10,000 lb of whiting: combined widow and yellowtail limit of 500 lb/ trip, cumulative yellowtail limit of 2,000 lb/ month			18,000 lb/ 2 months
23	small footrope trawl[7/]	In landings without flatfish, 1,000 lb/ month. As flatfish bycatch, per trip limit is the sum of 33% (by weight) of all flatfish except arrowtooth flounder, plus 10% (by weight) of arrowtooth flounder, not to exceed 3,000 lb/month. Total yellowtail landings not to exceed 3,000 lb/month, no more than 1,000 lb of which may be landed without flatfish.					
24	**Minor nearshore rockfish**	300 lb/ month					
25	**Lingcod[8/]**	800 lb/ 2 months		1,000 lb/ 2 months		800 lb/ 2 months	

1/ Gear requirements and prohibitions are explained above. See A.(14).

2/ "North" means 40°10' N. lat. to the U.S.-Canada border. 40°10' N. lat. is about 20 nm south of Cape Mendocino, CA.

3/ Bocaccio and chilipepper are included in the trip limits for minor shelf rockfish and splitnose rockfish is included in the trip limits for minor slope rockfish.

4/ "Other" flatfish means all flatfish at 50 CFR 660.302 except those in this Table 3 with species specific management measures, including trip limits.

5/ The whiting "per trip" limit in the Eureka area shoreward of 100 fm is 10,000 lb/ trip throughout the year. Outside Eureka area, the 20,000 lb/ trip limit applies. See B.(3).

6/ Closed means that it is prohibited to take and retain, possess, or land the designated species in the time or area indicated. See A.(7).

7/ Small footrope trawl means a bottom trawl net with a footrope no larger than 8 inches (20 cm) in diameter.

8/ The minimum size limit for lingcod is 24 inches (61 cm) total length.

9/ Other fish are defined at 50 CFR 660.302, as those groundfish species or species groups for which there is no trip limit, size limit, quota, or harvest guideline.

10/ The "Rockfish Conservation Area" is a gear and/or sector specific closed area generally described by depth contours but specifically defined by lat/long coordinates set out at A.(19)(e), that may vary seasonally.

To convert pounds to kilograms, divide by 2.20462, the number of pounds in one kilogram.

Table 3 (South). Trip Limits and Gear Requirements[1/] for Limited Entry Trawl Gear South of 40°10' N. Latitude[2/]

Other Limits and Requirements Apply -- Read Sections A. and B. of NMFS Actions before using this table

		JAN-FEB	MAR-APR	MAY-JUN	JUL-AUG	SEP-OCT	NOV-DEC
	Rockfish Conservation Area[10/] (RCA):						
	40°10' - 38° N. lat.	50 fm - 250 fm	60 fm - 250 fm				
	38° - 34°27' N. lat.	50 fm - 150 fm	60 fm - 150 fm				
	South of 34°27' N. lat.	100 fm - 150 fm along the mainland coast; shoreline - 150 fm around islands					
	Small footrope is required shoreward of the RCA; both large and small footropes are permitted seaward of the RCA. Only one type of trawl gear is allowed on board a vessel at any one time.						
1	**Minor slope rockfish[3/]**						
2	40°10' - 38° N. lat.	1,800 lb/ 2 months					
3	South of 38° N. lat.	30,000 lb/ 2 months					
4	**Splitnose**						
5	40°10' - 38° N. lat.	1,800 lb/ 2 months					
6	South of 38° N. lat.	30,000 lb/ 2 months					
7	**DTS complex**						
8	Sablefish	6,000 lb/ 2 months		7,000 lb/ 2 months			6000 lb/ 2 months
9	Longspine thornyhead	8,000 lb /2 months	9,000 lb/ 2 months				7000 lb/ 2 months
10	Shortspine thornyhead	2,300 lb/ 2 months	2,400 lb/ 2 months				2,200 lb/ 2 months
11	Dover sole	26,000 lb/ 2 months		25,000 lb/ 2 months			26,000 lb/ 2 months
12	**Flatfish**						
13	All other flatfish[4/]	70,000 lb/ 2 months	70,000 lb/ 2 months, no more than 10,000 lb/ 2 months of which may be petrale sole				70,000 lb/ 2 months
14	Petrale sole	No limit					No limit
15	Rex sole	Included in all other flatfish					
16	Arrowtooth flounder	No limit	1,000 lb/ 2 months				No limit
17	**Whiting[5/]**						
18	mid water trawl	20,000 lb/ trip		Primary Season - (mid-water trawling permitted in the RCA)		10,000 lb/ trip	
19	**Other Fish[9/]**	Not limited					
20	**Use of small footrope bottom trawl[7/] or mid-water trawl is required for landing all of the following species:**						
21	**Minor shelf rockfish, widow, and chilipepper rockfish[3/]**	300 lb/ month					
22	**Widow rockfish**						
23	mid water trawl - permitted within the RCA	CLOSED[6/]					12, 000 lb/ 2 months
24	**Canary rockfish**	100 lb/ month		300 lb/ month		100 lb/ month	
25	**Bocaccio**	CLOSED[6/]					
26	**Cowcod**	CLOSED[6/]					
27	**Minor nearshore rockfish**	300 lb/ month					
28	**Lingcod[8/]**	800 lb/ 2 months		1,000 lb/ 2 months		800 lb/ 2 months	

1/ Gear requirements and prohibitions are explained above. See A.(14).

2/ "South" means 40°10' N. lat. to the U.S.-Mexico border. 40°10' N. lat. is about 20 nm south of Cape Mendocino, CA.

3/ Yellowtail is included in the trip limits for minor shelf rockfish and POP is included in the trip limits for minor slope rockfish.

4/ "Other" flatfish means all flatfish at 50 CFR 660.302 except those in this Table 3 with species specific management measures, including trip limits.

5/ The whiting "per trip" limit in the Eureka area shoreward of 100 fm is 10,000 lb/ trip throughout the year. Outside Eureka area, the 20,000 lb/ trip limit applies. See B.(3).

6/ Closed means that it is prohibited to take and retain, possess, or land the designated species in the time or area indicated. See A.(7).

7/ Small footrope trawl means a bottom trawl net with a footrope no larger than 8 inches (20 cm) in diameter.

8/ The minimum size limit for lingcod is 24 inches (61 cm) total length.

9/ Other fish are defined at 50 CFR 660.302, as those groundfish species or species groups for which there is no trip limit, size limit, quota, or harvest guideline.

10/ The "Rockfish Conservation Area" is a gear and/or sector specific closed area generally described by depth contours but specifically defined by lat./long. coordinates set out at A.(19)(e), that may vary seasonally.

To convert pounds to kilograms, divide by 2.20462, the number of pounds in one kilogram.

BILLING CODE 3510–22–C

Under D. Recreational Fishery:

7. On page 931, in column 2, paragraph (1)(a) is corrected to read as follows:

* * * * *

(1) * * *

(a) *Yelloweye Rockfish Conservation Area.* The YRCA is an ''L-shaped'' area which is closed to recreational groundfish and halibut fishing. The coordinates for the YRCA are defined at A.(19).

* * * * *

8. On page 932, in column 1, line 29, paragraph (3)(b)(i)(A) is corrected to read as follows:

* * * * *

(3) * * *

(b) * * *

(i) * * *

(A) *Cowcod Conservation Areas.* Recreational fishing for groundfish is prohibited within the CCAs, for coordinates described in Federal regulations at 50 CFR 660.304(i), except that fishing for sanddabs is permitted subject to the provisions in paragraph D.(3)(iv) and that fishing for species managed under this section (not including cowcod, bocaccio, canary, and yelloweye rockfishes) is permitted in waters shoreward of the 20- fm (37–m) depth contour within the CCAs from July 1 through December 31, 2003, subject to the bag limits in this section.

* * * * *

9. On page 932, in column 2, line 3, paragraph (3)(b)(ii)(B) is corrected to read as follows:

* * * * *

(ii) * * *

(B) *Bag limits, boat limits, hook limits.* South of 40°10′ N. lat., in times and areas when the recreational season for the RCG Complex is open, there is a limit of two hooks and one line when fishing for rockfish, and the bag limit is 10 RCG Complex fish per day (not including bocaccio, canary rockfish, yelloweye rockfish and cowcod which are prohibited), of which up to 10 may be rockfish, no more than 2 of which may be shallow nearshore rockfish. [Note: The shallow nearshore rockfish group off California are composed of kelp, grass, black-and-yellow, China, and gopher rockfishes.] Also within the 10 RCG Complex fish per day limit, no more than 2 fish per day may be greenling (kelp and/or rock greenling) and no more than 3 fish per day may be cabezon. Lingcod, California scorpionfish, and sanddabs taken in recreational fisheries off California do not count toward the 10 RCG Complex fish per day bag limit. Multi-day limits are authorized by a valid permit issued by California and must not exceed the daily limit multiplied by the number of days in the fishing trip.

* * * * *

Classification

The Assistant Administrator for Fisheries, NOAA (AA) finds that good cause exists pursuant to 5 U.S.C. 553(b)(B) to waive prior notice and opportunity for public comment as such prior notice and opportunity for public comment is unnecessary, impracticable, and contrary to the public interest. It is unnecessary because this notice publishes a minor technical correction, changing the 2003 emergency rule specifications and management measures to refer to the CCAs in section 660.304(i) to section 660.304(c). It is impracticable because NMFS does not have sufficient time to seek public comment on the clarifications to harvest levels and management measures in this notice and to incorporate such comments into the notice before it is published in the **Federal Register**. NMFS must act quickly to publish this notice as it corrects harvest trip limits and other management measures that will protect overfished groundfish stocks. Such measures include clarifying the trip limits of yellowtail rockfish and Pacific whiting, allowing only mid-water trawling for Pacific whiting inside the RCA from May through August, and prohibiting the retention of bocaccio, canary rockfish, yelloweye rockfish, and cowcod in the RCG complex bag limits south of 40°10′ N. lat. Prior notice and opportunity for public comment is contrary to the public interest because such notice and opportunity for public comment will delay implementing this correction notice, thereby increasing the risk of further depletion of overfished groundfish stocks. Such depletion would most likely result in the premature closure of certain sectors in the Pacific Coast groundfish fishery later in 2003 to protect such stocks. These fishery closures would likely have a negative socio-economic impact on local fishing communities. Finally, one of the measures corrects the western boundary of the trawl RCA in order to allow access to areas where petrale sole congregate in the winter. Delay in implementing this correction would prevent fishers from accessing the petrale sole before they disperse, and would have a negative socio-economic impact on local fishing communities.

The AA also finds good cause pursuant to 5 U.S.C. 553(D)(3) to waive the 30 day delay in the effective date of this correction notice. Such a delay would increase the probability that fishermen would further deplete overfished groundfish species as they would continue to fish in areas and with gear that are incompatible with the conservation efforts contained in the 2003 harvest specifications and management measures. For the correction of the petrale sole area, the delay would prevent fishermen of taking advantage of an opportunity to harvest healthy stocks of petrale sole when they can be taken with minimal bycatch.

Authority: 1801 *et seq.*

Dated: January 23, 2003.

Rebecca Lent,

Deputy Assistant Administrator for Regulatory Affairs, National Marine Fisheries Service.

[FR Doc. 03–1910 Filed 1–27–03; 2:12 pm]

BILLING CODE 3510–22–S

Proposed Rules

Federal Register
Vol. 68, No. 20
Thursday, January 30, 2003

This section of the FEDERAL REGISTER contains notices to the public of the proposed issuance of rules and regulations. The purpose of these notices is to give interested persons an opportunity to participate in the rule making prior to the adoption of the final rules.

DEPARTMENT OF TRANSPORTATION

Federal Aviation Administration

14 CFR Part 39

[Docket No. 2002–NM–88–AD]

RIN 2120–AA64

Airworthiness Directives; Empresa Brasileira de Aeronautica S.A. (EMBRAER) Model EMB–135 and –145 Series Airplanes

AGENCY: Federal Aviation Administration, DOT.

ACTION: Notice of proposed rulemaking (NPRM).

SUMMARY: This document proposes the adoption of a new airworthiness directive (AD) that is applicable to certain EMBRAER Model EMB–135 and –145 series airplanes. This proposal would require replacing the four Gamah clamp/sleeve joints on an engine bleed air duct with new threaded coupling assemblies. For certain airplanes, this proposal would also require replacing the two supports for the engine bleed air duct with two new supports. This action is necessary to prevent hot air leaks from the bleed air duct due to disconnection of the duct joint, which could result in heat damage to components near the duct, and consequent increased risk of fire in the rear baggage compartment. This action is intended to address the identified unsafe condition.

DATES: Comments must be received by March 3, 2003.

ADDRESSES: Submit comments in triplicate to the Federal Aviation Administration (FAA), Transport Airplane Directorate, ANM–114, Attention: Rules Docket No. 2002–NM–88–AD, 1601 Lind Avenue, SW., Renton, Washington 98055–4056. Comments may be inspected at this location between 9 a.m. and 3 p.m., Monday through Friday, except Federal holidays. Comments may be submitted via fax to (425) 227–1232. Comments may also be sent via the Internet using the following address: *9-anm-nprmcomment@faa.gov.* Comments sent via fax or the Internet must contain ''Docket No. 2002-NM–88–AD'' in the subject line and need not be submitted in triplicate. Comments sent via the Internet as attached electronic files must be formatted in Microsoft Word 97 for Windows or ASCII text.

The service information referenced in the proposed rule may be obtained from Empresa Brasileira de Aeronautica S.A. (EMBRAER), P.O. Box 343—CEP 12.225, Sao Jose dos Campos—SP, Brazil. This information may be examined at the FAA, Transport Airplane Directorate, 1601 Lind Avenue, SW., Renton, Washington.

FOR FURTHER INFORMATION CONTACT: Robert D. Breneman, Aerospace Engineer, International Branch, ANM–116, FAA, Transport Airplane Directorate, 1601 Lind Avenue, SW., Renton, Washington 98055–4056; telephone (425) 227–1263; fax (425) 227–1149.

SUPPLEMENTARY INFORMATION:

Comments Invited

Interested persons are invited to participate in the making of the proposed rule by submitting such written data, views, or arguments as they may desire. Communications shall identify the Rules Docket number and be submitted in triplicate to the address specified above. All communications received on or before the closing date for comments, specified above, will be considered before taking action on the proposed rule. The proposals contained in this action may be changed in light of the comments received.

Submit comments using the following format:

- Organize comments issue-by-issue. For example, discuss a request to change the compliance time and a request to change the service bulletin reference as two separate issues.
- For each issue, state what specific change to the proposed AD is being requested.
- Include justification (*e.g.*, reasons or data) for each request.

Comments are specifically invited on the overall regulatory, economic, environmental, and energy aspects of the proposed rule. All comments submitted will be available, both before and after the closing date for comments, in the Rules Docket for examination by interested persons. A report summarizing each FAA-public contact concerned with the substance of this proposal will be filed in the Rules Docket.

Commenters wishing the FAA to acknowledge receipt of their comments submitted in response to this action must submit a self-addressed, stamped postcard on which the following statement is made: ''Comments to Docket Number 2002–NM–88–AD.'' The postcard will be date stamped and returned to the commenter.

Availability of NPRMs

Any person may obtain a copy of this NPRM by submitting a request to the FAA, Transport Airplane Directorate, ANM–114, Attention: Rules Docket No. 2002–NM–88–AD, 1601 Lind Avenue, SW., Renton, Washington 98055–4056.

Discussion

The Departmento de Aviacao Civil (DAC), which is the airworthiness authority for Brazil, notified the FAA that an unsafe condition may exist on certain EMBRAER Model EMB–135 and –145 series airplanes. The DAC advises that the engine bleed air duct between frames 68 and 69 in the rear baggage compartment could leak. The cause of the leakage has been attributed to possible disconnection of the duct joint. This condition, if not corrected, could result in hot air leaks from the bleed air duct, which could lead to heat damage to components near the duct, and consequent increased risk of fire in the rear baggage compartment.

Explanation of Relevant Service Information

EMBRAER has issued Service Bulletin 145–36–0024, dated May 31, 2001, which describes procedures for replacing the four Gamah clamp/sleeve joints from the bleed line at the baggage compartment between frames 68 and 69 with new threaded coupling assemblies (including re-identifying, cleaning, and lubricating the bleed ducts; and installing protection sleeves). For certain airplanes, the service bulletin also describes procedures for replacing the two supports for the engine bleed air duct with two new supports. Accomplishment of the actions specified in the service bulletin is intended to adequately address the identified unsafe condition. The DAC classified this service bulletin as

mandatory and issued Brazilian airworthiness directive 2001–09–03, dated October 2, 2001, in order to assure the continued airworthiness of these airplanes in Brazil.

FAA's Conclusions

These airplane models are manufactured in Brazil and are type certificated for operation in the United States under the provisions of section 21.29 of the Federal Aviation Regulations (14 CFR 21.29) and the applicable bilateral airworthiness agreement. Pursuant to this bilateral airworthiness agreement, the DAC has kept the FAA informed of the situation described above. The FAA has examined the findings of the DAC, reviewed all available information, and determined that AD action is necessary for products of this type design that are certificated for operation in the United States.

Explanation of Requirements of Proposed Rule

Since an unsafe condition has been identified that is likely to exist or develop on other airplanes of the same type design registered in the United States, the proposed AD would require accomplishment of the actions specified in the service bulletin described previously.

Difference Between the Brazilian Airworthiness Directive and the Proposed AD

The proposed AD would differ from the parallel Brazilian airworthiness directive in that the applicability would only affect those Model EMB–135 and –145 series airplanes listed in the Effectivity of EMBRAER Service Bulletin 145–36–0024, dated May 31, 2001. The Brazilian airworthiness directive affects all Model–135 and –145 series airplanes. As indicated in EMBRAER Service Bulletin 145–36–0024, certain airplanes had the replacement specified in that service bulletin done during production. The limited applicability has been coordinated and concurred with by the DAC.

Cost Impact

The FAA estimates that 346 airplanes of U.S. registry would be affected by this proposed AD, that it would take approximately 3 work hours per airplane to accomplish the proposed replacement, and that the average labor rate is $60 per work hour. Required parts would cost approximately between $1,978 and $2,007 per airplane. Based on these figures, the cost impact of the proposed AD on U.S. operators of these airplanes is estimated to be between $746,668 and $756,702; or between $2,158 and $2,187 per airplane.

The cost impact figures discussed above are based on assumptions that no operator has yet accomplished any of the proposed requirements of this AD action, and that no operator would accomplish those actions in the future if this proposed AD were not adopted. The cost impact figures discussed in AD rulemaking actions represent only the time necessary to perform the specific actions actually required by the AD. These figures typically do not include incidental costs, such as the time required to gain access and close up, planning time, or time necessitated by other administrative actions.

Regulatory Impact

The regulations proposed herein would not have a substantial direct effect on the States, on the relationship between the national government and the States, or on the distribution of power and responsibilities among the various levels of government. Therefore, it is determined that this proposal would not have federalism implications under Executive Order 13132.

For the reasons discussed above, I certify that this proposed regulation (1) is not a ''significant regulatory action'' under Executive Order 12866; (2) is not a ''significant rule'' under the DOT Regulatory Policies and Procedures (44 FR 11034, February 26, 1979); and (3) if promulgated, will not have a significant economic impact, positive or negative, on a substantial number of small entities under the criteria of the Regulatory Flexibility Act. A copy of the draft regulatory evaluation prepared for this action is contained in the Rules Docket. A copy of it may be obtained by contacting the Rules Docket at the location provided under the caption **ADDRESSES.**

List of Subjects in 14 CFR Part 39

Air transportation, Aircraft, Aviation safety, Safety.

The Proposed Amendment

Accordingly, pursuant to the authority delegated to me by the Administrator, the Federal Aviation Administration proposes to amend part 39 of the Federal Aviation Regulations (14 CFR part 39) as follows:

PART 39—AIRWORTHINESS DIRECTIVES

1. The authority citation for part 39 continues to read as follows:

Authority: 49 U.S.C. 106(g), 40113, 44701.

§ 39.13 [Amended]

2. Section 39.13 is amended by adding the following new airworthiness directive:

Empresa Brasileira de Aeronautica S.A. (EMBRAER): Docket 2002–NM–88–AD.

Applicability: Model EMB–135 and –145 series airplanes, as listed in EMBRAER Service Bulletin 145–36–0024, dated May 31, 2001; excluding those airplanes listed in ''In-production effectivity'' in paragraph 1.A., ''Effectivity,'' of the service bulletin; certificated in any category.

Note 1: This AD applies to each airplane identified in the preceding applicability provision, regardless of whether it has been modified, altered, or repaired in the area subject to the requirements of this AD. For airplanes that have been modified, altered, or repaired so that the performance of the requirements of this AD is affected, the owner/operator must request approval for an alternative method of compliance in accordance with paragraph (c) of this AD. The request should include an assessment of the effect of the modification, alteration, or repair on the unsafe condition addressed by this AD; and, if the unsafe condition has not been eliminated, the request should include specific proposed actions to address it.

Compliance: Required as indicated, unless accomplished previously.

To prevent hot air leaks from the bleed air duct due to disconnection of the duct joint, which could result in heat damage to components near the duct, and consequent increased risk of fire in the rear baggage compartment, accomplish the following:

Replacement

(a) Within 1,000 flight hours after the effective date of this AD, do the actions specified in paragraphs (a)(1) and (a)(2) of this AD, as applicable, per EMBRAER Service Bulletin 145–36–0024, dated May 31, 2001.

(1) For all airplanes: Replace the four Gamah clamp/sleeve joints from the bleed line at the baggage compartment between frames 68 and 69 with new threaded coupling assemblies (including re-identifying, cleaning, and lubricating the bleed ducts; and installing protection sleeves).

(2) For airplanes having serial numbers listed in paragraph 3.G. of the Accomplishment Instructions of the service bulletin: Replace the two supports for the engine bleed air duct with two new supports, having part number 145–35923–007.

Parts Installation

(b) As of the effective date of this AD, no person shall install parts listed in paragraphs (b)(1) and (b)(2) of this AD, as applicable.

(1) For all airplanes: Gamah clamp/sleeve joints, from the bleed line at the baggage compartment between frames 68 and 69, having part number G30020CD, G30020TD, G30020C, or G30020T.

(2) For airplanes having serial numbers listed in paragraph 3.G. of the Accomplishment Instructions of EMBRAER Service Bulletin 145–36–0024, dated May 31, 2001: Supports for the engine bleed air duct, with part number 145–35923–007.

Alternative Methods of Compliance

(c) An alternative method of compliance or adjustment of the compliance time that provides an acceptable level of safety may be used if approved by the Manager, International Branch, ANM–116, Transport Airplane Directorate, FAA. Operators shall submit their requests through an appropriate FAA Principal Maintenance Inspector, who may add comments and then send it to the Manager, International Branch, ANM–116.

Note 2: Information concerning the existence of approved alternative methods of compliance with this AD, if any, may be obtained from the International Branch, ANM–116.

Special Flight Permits

(d) Special flight permits may be issued in accordance with sections 21.197 and 21.199 of the Federal Aviation Regulations (14 CFR 21.197 and 21.199) to operate the airplane to a location where the requirements of this AD can be accomplished.

Note 3: The subject of this AD is addressed in Brazilian airworthiness directive 2001–09–03, dated October 2, 2001.

Issued in Renton, Washington, on January 23, 2003.

Vi L. Lipski,

Manager, Transport Airplane Directorate, Aircraft Certification Service.

[FR Doc. 03–2096 Filed 1–29–03; 8:45 am]

BILLING CODE 4910–13–P

DEPARTMENT OF TRANSPORTATION

Federal Aviation Administration

14 CFR Part 39

[Docket No. 2001–NM–152–AD]

RIN 2120–AA64

Airworthiness Directives; McDonnell Douglas Model DC–8–11, DC–8–12, DC–8–21, DC–8–31, DC–8–32, DC–8–33, DC–8–41, DC–8–42, and DC–8–43 Airplanes; DC–8–50 Series Airplanes; DC–8–61 Airplanes; DC–8–61F Airplanes; DC–8–71 Airplanes, and DC–8–71F Airplanes

AGENCY: Federal Aviation Administration, DOT.

ACTION: Notice of proposed rulemaking (NPRM).

SUMMARY: This document proposes to revise an existing airworthiness directive (AD), applicable to certain McDonnell Douglas airplanes. That AD currently requires visual or eddy current inspections of the left and right wing front spar lower caps to detect cracks migrating from attachment holes; and repair, if necessary. That AD also requires a terminating modification of the front spar lower cap. That AD was prompted by a report that additional cracking was found in the front spar lower cap of a wing. The actions specified by that AD are intended to prevent reduced structural integrity of the left or right wing due to metal fatigue failure of the front spar lower cap. This action would extend the compliance time for the follow-on inspection after accomplishment of the terminating modification.

DATES: Comments must be received by March 17, 2003.

ADDRESSES: Submit comments in triplicate to the Federal Aviation Administration (FAA), Transport Airplane Directorate, ANM–114, Attention: Rules Docket No. 2001–NM–152–AD, 1601 Lind Avenue, SW., Renton, Washington 98055–4056. Comments may be inspected at this location between 9 a.m. and 3 p.m., Monday through Friday, except Federal holidays. Comments may be submitted via fax to (425) 227–1232. Comments may also be sent via the Internet using the following address: *9-anm-nprmcomment@faa.gov.* Comments sent via fax or the Internet must contain ''Docket No. 2001-NM–152-AD'' in the subject line and need not be submitted in triplicate. Comments sent via the Internet as attached electronic files must be formatted in Microsoft Word 97 for Windows or ASCII text.

The service information referenced in the proposed rule may be obtained from Boeing Commercial Aircraft Group, Long Beach Division, 3855 Lakewood Boulevard, Long Beach, California 90846, Attention: Data and Service Management, Dept. C1–L5A (D800–0024). This information may be examined at the FAA, Transport Airplane Directorate, 1601 Lind Avenue, SW., Renton, Washington; or at the FAA, Los Angeles Aircraft Certification Office, 3960 Paramount Boulevard, Lakewood, California.

FOR FURTHER INFORMATION CONTACT: Jon Mowery, Aerospace Engineer, Airframe Branch, ANM–120L, FAA, Los Angeles Aircraft Certification Office, 3960 Paramount Boulevard, Lakewood, California 90712; telephone (562) 627–5231; fax (562) 627–5210.

SUPPLEMENTARY INFORMATION:

Comments Invited

Interested persons are invited to participate in the making of the proposed rule by submitting such written data, views, or arguments as they may desire. Communications shall identify the Rules Docket number and be submitted in triplicate to the address specified above. All communications received on or before the closing date for comments, specified above, will be considered before taking action on the proposed rule. The proposals contained in this action may be changed in light of the comments received.

Submit comments using the following format:

- Organize comments issue-by-issue. For example, discuss a request to change the compliance time and a request to change the service bulletin reference as two separate issues.
- For each issue, state what specific change to the proposed AD is being requested.
- Include justification (*e.g.*, reasons or data) for each request.

Comments are specifically invited on the overall regulatory, economic, environmental, and energy aspects of the proposed rule. All comments submitted will be available, both before and after the closing date for comments, in the Rules Docket for examination by interested persons. A report summarizing each FAA-public contact concerned with the substance of this proposal will be filed in the Rules Docket.

Commenters wishing the FAA to acknowledge receipt of their comments submitted in response to this action must submit a self-addressed, stamped postcard on which the following statement is made: ''Comments to Docket Number 2001–NM–152–AD.'' The postcard will be date stamped and returned to the commenter.

Availability of NPRMs

Any person may obtain a copy of this NPRM by submitting a request to the FAA, Transport Airplane Directorate, ANM–114, Attention: Rules Docket No. 2001–NM–152–AD, 1601 Lind Avenue, SW., Renton, Washington 98055–4056.

Discussion

On March 12, 2001, the FAA issued AD 2001–06–02, amendment 39–12149 (66 FR 16107, March 23, 2001), applicable to McDonnell Douglas Model DC–8 series airplanes, as listed in McDonnell Douglas Service Bulletin DC–8–57–090, Revision 05, dated June 16, 1997. That AD requires visual or eddy current inspections of the left and right wing front spar lower caps to detect cracks migrating from attachment holes; and repair, if necessary. That AD also requires a terminating modification of the front spar lower cap and a follow-on inspection. That action was prompted by a report that additional cracking was found in the front spar lower cap of a wing. The requirements of that AD are intended to prevent reduced structural integrity of the left or right wing due to metal fatigue failure of the front spar lower cap.

Actions Since Issuance of Previous Rule

Since the issuance of that AD, the FAA has received information that the compliance time for the follow-on inspection after accomplishment of the terminating modification should be within 32,900 landings after the modification rather than within 32,900 flight hours. The compliance time based on landings is longer than that based on flight hours, since the fleet averages 2.7 flight hours for every landing. The FAA has determined that extending the compliance time for the follow-on inspection after the terminating modification will provide an acceptable level of safety.

Explanation of Requirements of Proposed Rule

Since an unsafe condition has been identified that is likely to exist or develop on other products of this same type design, the proposed AD would continue to require modification of the lower front spar cap and a follow-on inspection. However, the proposed AD would change the compliance time for the follow-on inspection from 32,900 flight hours to 32,900 landings after the modification.

Explanation of Change to Applicability in Proposed AD

The FAA has revised the applicability of the existing AD to identify model designations as published in the most recent type certificate data sheet for the affected models. The existing AD specifies the applicability as Model DC–8 series airplanes, as listed in McDonnell Douglas Service Bulletin DC8–57–090, Revision 05, dated June 16, 1997.'' The proposed AD specifies the applicability as ''McDonnell Douglas Model DC–8–11, DC–8–12, DC–8–21, DC–8–31, DC–8–32, DC–8–33, DC–8–41, DC–8–42, and DC–8–43 airplanes; DC–8–50 series airplanes; DC–8–61 airplanes; DC–8–61F airplanes; DC–8–71 airplanes, and DC–8–71F airplanes.''

Cost Impact

There are approximately 264 Model DC–8 series airplanes of the affected design in the worldwide fleet. The FAA estimates that 244 airplanes of U.S. registry would be affected by this proposed AD.

The initial and repetitive eddy current inspection currently required by AD 2001–06–02 takes approximately 2 work hours per airplane to accomplish at an average labor rate of $60 per work hour. Based on these figures, the cost impact of the currently required inspections on U.S. operators is estimated to be $29,280, or $120 per airplane, per inspection cycle.

The preventive modification currently required by AD 2001–06–02 takes approximately 12 to 14 work hours per airplane to accomplish at an average labor rate of $60 per work hour. Required parts cost between $303 and $1,202 per airplane. Based on these figures, the cost impact of the currently required preventive modification on U.S. operators is estimated to be between $256,773 and $512,542, or between $1,023 and $2,042, per airplane.

The follow-on (post-modification) inspection currently required by AD 2001–06–02 takes approximately 2 work hours per airplane to accomplish at an average labor rate of $60 per work hour. Based on these figures, the cost impact of the currently required follow-on inspection on U.S. operators is estimated to be $29,280, or $120 per airplane. This proposal would increase the compliance time for performing the follow-on inspection, but would not change the estimated cost of that inspection.

The cost impact figures discussed above are based on assumptions that no operator has yet accomplished any of the proposed requirements of this AD action, and that no operator would accomplish those actions in the future if this AD were not adopted. The cost impact figures discussed in AD rulemaking actions represent only the time necessary to perform the specific actions actually required by the AD. These figures typically do not include incidental costs, such as the time required to gain access and close up, planning time, or time necessitated by other administrative actions.

Regulatory Impact

The regulations proposed herein would not have a substantial direct effect on the States, on the relationship between the national Government and the States, or on the distribution of power and responsibilities among the various levels of government. Therefore, it is determined that this proposal would not have federalism implications under Executive Order 13132.

For the reasons discussed above, I certify that this proposed regulation (1) is not a ''significant regulatory action'' under Executive Order 12866; (2) is not a ''significant rule'' under the DOT Regulatory Policies and Procedures (44 FR 11034, February 26, 1979); and (3) if promulgated, will not have a significant economic impact, positive or negative, on a substantial number of small entities under the criteria of the Regulatory Flexibility Act. A copy of the draft regulatory evaluation prepared for this action is contained in the Rules Docket. A copy of it may be obtained by contacting the Rules Docket at the location provided under the caption **ADDRESSES.**

List of Subjects in 14 CFR Part 39

Air transportation, Aircraft, Aviation safety, Safety.

The Proposed Amendment

Accordingly, pursuant to the authority delegated to me by the Administrator, the Federal Aviation Administration proposes to amend part 39 of the Federal Aviation Regulations (14 CFR part 39) as follows:

PART 39—AIRWORTHINESS DIRECTIVES

1. The authority citation for part 39 continues to read as follows:

Authority: 49 U.S.C. 106(g), 40113, 44701.

§ 39.13 [Amended]

2. Section 39.13 is amended by removing amendment 39–12149 (66 FR 16107, March 23, 2001), and by adding a new airworthiness directive (AD), to read as follows:

McDonnell Douglas: Docket 2001–NM–152–AD. Revises AD 2001–06–02, Amendment 39–12149.

Applicability: Model DC–8–11, DC–8–12, DC–8–21, DC–8–31, DC–8–32, DC–8–33, DC–8–41, DC–8–42, and DC–8–43 airplanes; DC–8–51, –52, –53, and –55 airplanes; DC–8–61 airplanes; DC–8–61F airplanes; DC–8–71 airplanes, and DC–8–71F airplanes; certificated in any category.

Note 1: This AD applies to each airplane identified in the preceding applicability provision, regardless of whether it has been modified, altered, or repaired in the area subject to the requirements of this AD. For airplanes that have been modified, altered, or repaired so that the performance of the requirements of this AD is affected, the owner/operator must request approval for an alternative method of compliance in accordance with paragraph (i) of this AD. The request should include an assessment of the effect of the modification, alteration, or repair on the unsafe condition addressed by this AD; and, if the unsafe condition has not been eliminated, the request should include specific proposed actions to address it.

Compliance: Required as indicated, unless accomplished previously.

To prevent reduced structural integrity of the left or right wing due to metal fatigue failure of the front spar lower cap, accomplish the following:

Note 2: This AD will affect the inspections, corrective actions, and reports required by AD 93–01–15, amendment 39–8469 (58 FR 5576, January 22, 1993), for Principal Structural Elements (PSE) 57.08.021 and 57.08.022 of the DC–8 Supplemental Inspection Document (SID).

Note 3: Where there are differences between this AD and the referenced service bulletin, the AD prevails.

Eddy Current Inspection

(a) For airplanes equipped with left or right wing front spar lower cap, part number (P/N) 5597838–1 or –2, not modified per any of the McDonnell Douglas DC–8 service bulletins listed in Table 1 of this AD: Do an eddy current inspection to detect cracks of the lower front spar caps of the wings at the attachment holes of the leading edge assembly between stations Xfs=515.000 and Xfs=526.760, per McDonnell Douglas Service Bulletin DC8–57–090, Revision 05, dated June 16, 1997, at the time specified in either paragraph (a)(1), (a)(2), or (a)(3) of this AD, as applicable. Eddy current inspections done before the effective date of this AD per McDonnell Douglas DC–8 Service Bulletin 57–90, Revision 1, dated June 16, 1988; Revision 2, dated March 1, 1991; Revision 3, dated March 25, 1992; or Revision 4, dated March 3, 1995; are considered acceptable for compliance with the requirements of paragraph (a) of this AD. Table 1 is as follows:

TABLE 1.—APPLICABLE SERVICE BULLETINS FOR PREVENTIVE MODIFICATION

Service bulletin	Revision level	Date
57–90	Original	October 3, 1983
57–90	1	June 16, 1988
57–90	2	March 1, 1991
57–90	3	March 25, 1992
57–90	4	March 3, 1995
DC8–57–090	05	June 16, 1997

(1) For airplanes on which the immediately preceding inspection was conducted using eddy current techniques per AD 86–20–08, amendment 39–5434, prior to April 27, 2001, (the effective date of AD 2001–06–02, amendment 39–12149). Inspect within 3,600 flight hours or 3 years after accomplishment of the last eddy current inspection, whichever occurs first.

(2) For airplanes on which the immediately preceding inspection was conducted visually per AD 86–20–08 prior to April 27, 2001: Inspect within 3,200 flight hours or 2 years after accomplishment of the last visual inspection, whichever occurs first.

(3) For airplanes on which a visual or eddy current inspection or the modification required by AD 86–20–08 has not been done: Inspect before the accumulation of 30,000 total flight hours, or within 200 flight hours after April 27, 2001.

(b) For airplanes other than those identified in paragraph (a) of this AD, not modified per any of the McDonnell Douglas DC–8 service bulletins listed in Table 1 of this AD: Within 3,200 flight hours or 2 years after April 27, 2001, whichever occurs first, do the eddy current inspection specified in paragraph (a) of this AD.

Repetitive Inspections

(c) If no crack is detected during any inspection required by this AD, repeat the eddy current inspection every 3,600 flight hours or 3 years, whichever occurs first.

Repair

(d) If any crack is detected during any inspection required this AD, before further flight, do the action specified in either paragraph (d)(1) or (d)(2) of this AD, as applicable.

(1) For cracks within the limits specified in Conditions 2 through 6, inclusive, Table 1 of paragraph 3.B.4 of the Accomplishment Instructions of McDonnell Douglas Service Bulletin DC8–57–090, Revision 05, dated June 16, 1997: Modify the lower front spar cap per McDonnell Douglas Service Bulletin DC8–57–090, Revision 05, dated June 16, 1997. Accomplishment of the modification constitutes compliance with the requirements of paragraphs (c) and (e) of this AD.

(2) For cracks that exceed the limits specified in Conditions 2 through 6, inclusive, Table 1 of paragraph 3.B.4 of the Accomplishment Instructions of McDonnell Douglas Service Bulletin DC8–57–090, Revision 05, dated June 16, 1997: Repair per a method approved by the Manager, Los Angeles Aircraft Certification Office (ACO), FAA.

Preventive Modification

(e) Before the accumulation of 100,000 total flight hours, modify the lower front spar cap per paragraph 3.B.2.B of the Accomplishment Instructions of McDonnell Douglas Service Bulletin DC8–57–090, Revision 05, dated June 16, 1997. Accomplishment of the modification constitutes compliance with the requirements of paragraphs (a) and (b) of this AD and terminates the repetitive inspection requirements of paragraph (c) of this AD. Modification of the lower front spar cap accomplished before the effective date of this AD per McDonnell Douglas DC–8 Service Bulletin 57–90, dated October 3, 1993; Revision 1, dated June 16, 1988; Revision 2, dated March 1, 1991; Revision 3, dated March 25, 1992; or Revision 4, dated March 3, 1995; is considered acceptable for compliance with the requirements of paragraph (e) of this AD.

(f) Accomplishment of the modification required by paragraph B. of AD 90–16–05, amendment 39–6614 (55 FR 31818, August 6, 1990) (which references ''DC–8 Aging Aircraft Service Action Requirements Document'' (SARD), McDonnell Douglas Report MDC K1579, Revision A, dated March 1, 1990, as the appropriate source of service information for accomplishing the modification) constitutes compliance with paragraphs (a), (b), and (e) of this AD and terminates the repetitive inspection requirements of paragraph (c) of this AD.

Follow-On Inspection

(g) Within 32,900 landings after accomplishment of the modification specified in paragraph (g)(1), (g)(2), (g)(3), or (g)(4) of this AD, or within 2 years after the effective date of this AD, whichever occurs later, perform an inspection to detect cracks in the area specified in paragraph (a) of this AD, and corrective actions, if necessary; per a method approved by the Manager, Los Angeles ACO.

(1) Modification required by paragraph (d)(1) of this AD;

(2) Modification required by paragraph (e) of this AD;

(3) Modification specified in paragraph D. of AD 86–20–08; or

(4) Modification required by paragraph B. of AD 90–16–05.

Certain Actions Constitute Compliance With AD 90–16–05

(h) Accomplishment of the eddy current inspection(s) required by this AD constitutes compliance with the inspections required by paragraph A. of AD 90–16–05, as it pertains to McDonnell Douglas DC–8 Service Bulletin 57–90, Revision 2, dated March 1, 1991. Accomplishment of the eddy current inspection(s) does not terminate the remaining requirements of AD 90–16–05, as it applies to other service bulletins. Operators are required to continue to inspect and/or modify per the other service bulletins listed in that AD.

Alternative Methods of Compliance

(i) An alternative method of compliance or adjustment of the compliance time that provides an acceptable level of safety may be used if approved by the Manager, Los Angeles ACO. Operators shall submit their requests through an appropriate FAA Principal Maintenance Inspector, who may add comments and then send it to the Manager, Los Angeles ACO.

Note 4: Information concerning the existence of approved alternative methods of compliance with this AD, if any, may be obtained from the Los Angeles ACO.

Special Flight Permits

(j) Special flight permits may be issued in accordance with sections 21.197 and 21.199 of the Federal Aviation Regulations (14 CFR 21.197 and 21.199) to operate the airplane to a location where the requirements of this AD can be accomplished.

Issued in Renton, Washington, on January 23, 2003.

Vi L. Lipski,

Manager, Transport Airplane Directorate, Aircraft Certification Service.

[FR Doc. 03–2095 Filed 1–29–03; 8:45 am]

BILLING CODE 4910–13–P

DEPARTMENT OF TRANSPORTATION

Federal Aviation Administration

14 CFR Part 39

[Docket No. 2002–NE–42–AD]

RIN 2120–AA64

Airworthiness Directives; Honeywell International Inc. (formerly AlliedSignal) Model RE220 (RJ) Auxiliary Power Units

AGENCY: Federal Aviation Administration, DOT.

ACTION: Notice of proposed rulemaking (NPRM).

SUMMARY: The Federal Aviation Administration (FAA) proposes to adopt a new airworthiness directive (AD) that is applicable to Honeywell International Inc. (formerly AlliedSignal) model RE220 (RJ) auxiliary power units (APUs) part number (P/N) WE3800770–2. This proposal would require replacing the existing fuel nozzles with new design fuel nozzles, making reidentification updates to the APU identification plate, and operating the APU to perform a visual inspection for fuel leaks. This proposal is prompted by reports received by the FAA of cracks occurring in the existing APU fuel nozzles leading to fuel leaks. The actions specified by the proposed AD are intended to prevent APU compartment fires and fuel vapor explosion.

DATES: Comments must be received by March 31, 2003.

ADDRESSES: Submit comments in triplicate to the Federal Aviation Administration (FAA), New England Region, Office of the Regional Counsel, Attention: Rules Docket No. 2002–NE–42–AD, 12 New England Executive Park, Burlington, MA 01803–5299. Comments may be inspected at this location, by appointment, between 8 a.m. and 4:30 p.m., Monday through Friday, except Federal holidays. Comments may also be sent via the Internet using the following address: ''*9-ane-adcomment@faa.gov*''. Comments sent via the Internet must contain the docket number in the subject line.

FOR FURTHER INFORMATION CONTACT: Roger Pesuit, Aerospace Engineer, Los Angeles Aircraft Certification Office, FAA, Transport Airplane Directorate, 3960 Paramount Blvd., Lakewood, CA 90712–4137; telephone (562) 627–5251, fax (562) 627–5210.

SUPPLEMENTARY INFORMATION:

Comments Invited

Interested persons are invited to participate in the making of the proposed rule by submitting such written data, views, or arguments as they may desire. Communications should identify the Rules Docket number and be submitted in triplicate to the address specified above. All communications received on or before the closing date for comments, specified above, will be considered before taking action on the proposed rule. The proposals contained in this action may be changed in light of the comments received.

Comments are specifically invited on the overall regulatory, economic, environmental, and energy aspects of the proposed rule. All comments submitted will be available, both before and after the closing date for comments, in the Rules Docket for examination by interested persons. A report summarizing each FAA-public contact concerned with the substance of this proposal will be filed in the Rules Docket.

Commenters wishing the FAA to acknowledge receipt of their comments submitted in response to this action must submit a self-addressed, stamped postcard on which the following statement is made: ''Comments to Docket Number 2002–NE–42–AD.'' The postcard will be date stamped and returned to the commenter.

Availability of NPRMs

Any person may obtain a copy of this NPRM by submitting a request to the FAA, New England Region, Office of the Regional Counsel, Attention: Rules Docket No. 2002–NE–42–AD, 12 New England Executive Park, Burlington, MA 01803–5299.

Discussion

In May 2002, the FAA became aware of several reports of fuel leaks, occurring in APU compartments of Bombardier model CL–600–2C10 airplanes. The fuel leaks were determined to be caused by cracks of threaded fittings on fuel nozzles, installed in Honeywell International Inc. (formerly AlliedSignal) model RE220 (RJ) APUs P/N WE3800770–2. This condition, if not corrected, could result in APU compartment fires and fuel vapor explosion.

FAA's Determination of an Unsafe Condition and Proposed Actions

Since an unsafe condition has been identified that is likely to exist or develop on other Honeywell International Inc. (formerly AlliedSignal) model RE220 (RJ) APUs of the same type design, the proposed AD would require replacing the existing fuel nozzles, P/N WE3830486–2, with new design fuel nozzles, P/N WE3830513–1, making reidentification updates to the APU identification plate, and operating the APU to perform a visual inspection for fuel leaks.

Economic Analysis

There are approximately 95 Honeywell International Inc. (formerly AlliedSignal) model RE220 (RJ) APUs of the affected design in the worldwide fleet. The FAA estimates that 67 APUs installed on airplanes of U.S. registry would be affected by this proposed AD. The FAA also estimates that it would take approximately 3.5 work hours per APU to perform the proposed actions, and that the average labor rate is $60 per work hour. Required parts would cost approximately $34,077 per engine. Based on these figures, the total cost of the proposed AD to U.S. operators is estimated to be $2,297,249. The manufacturer has advised the FAA that they may provide fuel nozzles P/N WE3830513–1 at no cost to the operator, and 3.5 hours of labor credit, thereby substantially reducing the cost of this proposed rule.

Regulatory Analysis

This proposed rule does not have federalism implications, as defined in Executive Order 13132, because it would not have a substantial direct effect on the States, on the relationship between the national government and the States, or on the distribution of power and responsibilities among the various levels of government. Accordingly, the FAA has not consulted with state authorities prior to publication of this proposed rule.

For the reasons discussed above, I certify that this proposed regulation (1) is not a ''significant regulatory action'' under Executive Order 12866; (2) is not a ''significant rule'' under the DOT Regulatory Policies and Procedures (44 FR 11034, February 26, 1979); and (3) if promulgated, will not have a significant economic impact, positive or negative, on a substantial number of small entities under the criteria of the Regulatory Flexibility Act. A copy of the draft regulatory evaluation prepared for this action is contained in the Rules Docket. A copy of it may be obtained by contacting the Rules Docket at the location provided under the caption **ADDRESSES.**

List of Subjects in 14 CFR Part 39

Air transportation, Aircraft, Aviation safety, Safety.

The Proposed Amendment

Accordingly, pursuant to the authority delegated to me by the

Administrator, the Federal Aviation Administration proposes to amend part 39 of the Federal Aviation Regulations (14 CFR part 39) as follows:

PART 39—AIRWORTHINESS DIRECTIVES

1. The authority citation for part 39 continues to read as follows:

Authority: 49 U.S.C. 106(g), 40113, 44701.

§ 39.13 [Amended]

2. Section 39.13 is amended by adding the following new airworthiness directive:

Honeywell International Inc. (formerly AlliedSignal): Docket No. 2002–NE–42–AD.

Applicability: This airworthiness directive (AD) is applicable to Honeywell International Inc. (formerly AlliedSignal) model RE220 (RJ) auxiliary power units (APUs) part number (P/N) WE3800770–2. These APUs are installed on, but not limited to Bombardier model CL–600–2C10 airplanes.

Note 1: This AD applies to each APU identified in the preceding applicability provision, regardless of whether it has been modified, altered, or repaired in the area subject to the requirements of this AD. For APUs that have been modified, altered, or repaired so that the performance of the requirements of this AD is affected, the owner/operator must request approval for an alternative method of compliance in accordance with paragraph (e) of this AD. The request should include an assessment of the effect of the modification, alteration, or repair on the unsafe condition addressed by this AD; and, if the unsafe condition has not been eliminated, the request should include specific proposed actions to address it.

Compliance: Compliance with this AD is required as indicated, unless already done.

To prevent APU compartment fires and fuel vapor explosion, do the following:

(a) Within six months after the effective date of this AD, replace APU fuel nozzles, P/N WE3830486–2, with new design fuel nozzles, P/N WE3830513–1. Information on fuel nozzle replacement can be found in Honeywell International Inc. alert service bulletin (ASB) RE220–49–A7714, dated November 4, 2002.

(b) Reidentify the APU as follows:

(1) Change the P/N from WE3800770–2 to WE3800770–3 on the identification plate, by removing the –2 and vibropeening or hand stamping a –3 in its place.

(2) Vibropeen or hand stamp the letter ''C'' after the serial number to show conversion.

(3) Vibropeen or hand stamp ''Change Number 3'' on the identification plate adjacent to the MOD RECORD.

(c) Start the APU and perform a visual fuel leak check after one minute of operation.

(d) After the effective date of this AD, do not install fuel nozzles P/N WE3830486–2 into any APU P/N WE3800770–3.

Alternative Methods of Compliance

(e) An alternative method of compliance or adjustment of the compliance time that provides an acceptable level of safety may be used if approved by the Manager, Los Angeles Aircraft Certification Office (LAACO). Operators must submit their requests through an appropriate FAA Principal Maintenance Inspector, who may add comments and then send it to the Manager, LAACO.

Note 2: Information concerning the existence of approved alternative methods of compliance with this airworthiness directive, if any, may be obtained from the LAACO.

Special Flight Permits

(f) Special flight permits may be issued in accordance with §§ 21.197 and 21.199 of the Federal Aviation Regulations (14 CFR 21.197 and 21.199) to operate the airplane to a location where the requirements of this AD can be done.

Issued in Burlington, Massachusetts, on January 21, 2003.

Francis A. Favara,

Acting Manager, Engine and Propeller Directorate, Aircraft Certification Service.

[FR Doc. 03–2094 Filed 1–29–03; 8:45 am]

BILLING CODE 4910–13–P

DEPARTMENT OF TRANSPORTATION

Federal Aviation Administration

14 CFR Part 39

[Docket No. 2002–NM–128–AD]

RIN 2120–AA64

Airworthiness Directives; Boeing Model 747–400 Series Airplanes Equipped With General Electric Model CF6–80C2 Series Engines

AGENCY: Federal Aviation Administration, DOT.

ACTION: Notice of proposed rulemaking (NPRM).

SUMMARY: This document proposes the supersedure of an existing airworthiness directive (AD), applicable to certain Boeing Model 747–400 series airplanes, that currently requires repetitive tests of the cone brake of the central drive unit (CDU) of the thrust reversers, and corrective actions if necessary. This action would require installation of a thrust reverser actuation system (TRAS) lock and various related modifications and installations. Following installation of the TRAS lock, this action also would require repetitive functional tests of the TRAS lock, and corrective action if necessary. These actions are intended to prevent an inadvertent deployment of a thrust reverser during flight, which could result in loss of control of the airplane.

DATES: Comments must be received by March 17, 2003.

ADDRESSES: Submit comments in triplicate to the Federal Aviation Administration (FAA), Transport Airplane Directorate, ANM–114, Attention: Rules Docket No. 2002–NM–128–AD, 1601 Lind Avenue, SW., Renton, Washington 98055–4056. Comments may be inspected at this location between 9 a.m. and 3 p.m., Monday through Friday, except Federal holidays. Comments may be submitted via fax to (425) 227–1232. Comments may also be sent via the Internet using the following address: *9–anm–nprmcomment@faa.gov.* Comments sent via fax or the Internet must contain ''Docket No. 2002–NM–128–AD'' in the subject line and need not be submitted in triplicate. Comments sent via the Internet as attached electronic files must be formatted in Microsoft Word 97 for Windows or ASCII text.

The service information referenced in the proposed rule may be obtained from Boeing Commercial Airplane Group, PO Box 3707, Seattle, Washington 98124–2207; and AlliedSignal Aerospace Services, PO Box 52170, Phoenix, Arizona 85072–2170. This information may be examined at the FAA, Transport Airplane Directorate, 1601 Lind Avenue, SW., Renton, Washington.

FOR FURTHER INFORMATION CONTACT: Sulmo Mariano, Aerospace Engineer, Propulsion Branch, ANM–140S, FAA, Seattle Aircraft Certification Office, 1601 Lind Avenue, SW., Renton, Washington 98055–4056; telephone (425) 227–2686; fax (425) 227–1181.

SUPPLEMENTARY INFORMATION:

Comments Invited

Interested persons are invited to participate in the making of the proposed rule by submitting such written data, views, or arguments as they may desire. Communications shall identify the Rules Docket number and be submitted in triplicate to the address specified above. All communications received on or before the closing date for comments, specified above, will be considered before taking action on the proposed rule. The proposals contained in this action may be changed in light of the comments received.

Submit comments using the following format:

- Organize comments issue-by-issue. For example, discuss a request to change the compliance time and a request to change the service bulletin reference as two separate issues.
- For each issue, state what specific change to the proposed AD is being requested.
- Include justification (e.g., reasons or data) for each request.

Comments are specifically invited on the overall regulatory, economic, environmental, and energy aspects of the proposed rule. All comments submitted will be available, both before and after the closing date for comments, in the Rules Docket for examination by interested persons. A report summarizing each FAA-public contact concerned with the substance of this proposal will be filed in the Rules Docket.

Commenters wishing the FAA to acknowledge receipt of their comments submitted in response to this action must submit a self-addressed, stamped postcard on which the following statement is made: ''Comments to Docket Number 2002–NM–128–AD.'' The postcard will be date stamped and returned to the commenter.

Availability of NPRMs

Any person may obtain a copy of this NPRM by submitting a request to the FAA, Transport Airplane Directorate, ANM–114, Attention: Rules Docket No. 2002–NM–128–AD, 1601 Lind Avenue, SW., Renton, Washington 98055–4056.

Discussion

On April 26, 2000, the FAA issued AD 2000–09–03, amendment 39–11711 (65 FR 25829, May 4, 2000), to supersede AD 2000–02–33, amendment 39–11551 (65 FR 5742). AD 2000–09–03 is applicable to certain Boeing Model 747–400 series airplanes, and requires repetitive tests of the cone brake of the central drive unit (CDU) of the thrust reversers, and corrective actions if necessary. That action was prompted by a report indicating that completion of a cone brake test required by AD 2000–02–33 was ineffective for certain airplanes. The requirements of that AD 2000–09–03 are intended to ensure the integrity of the fail-safe features of the thrust reverser system by preventing possible failure modes in the thrust reverser control system that can result in inadvertent deployment of a thrust reverser during flight.

Actions Since Issuance of Previous Rule

In the preamble to AD 2000–02–33, the FAA specified that the actions required by that AD were considered ''interim action'' and that the manufacturer was developing a modification to positively address the unsafe condition. We indicated that we might consider further rulemaking action once the modification was developed, approved, and available. The manufacturer now has developed such a modification, and we have determined that further rulemaking action is indeed necessary; this proposed AD follows from that determination.

While the service information for installation of the modification has been available for some time, we have prioritized the issuance of ADs for corrective actions for the thrust reverser system on Boeing airplane models. Based on service experience, analyses, and flight simulator studies, it was determined that an in-flight deployment of a thrust reverser has more effect on controllability of twin-engine airplane models than of Model 747 series airplanes, which have four engines. For this reason, the highest priority was given to rulemaking that required corrective actions for the twin-engine airplane models. ADs that correct the same type of unsafe condition as would be addressed by this proposed AD have been issued previously for specific airplanes within the Boeing Model 737, 757, and 767 series.

After the issuance of the service information related to the modification, we received a report from the airplane manufacturer indicating that there have been several incidents of failure of a connection shaft for the thrust reverser actuation system (TRAS) brake, which is installed as part of the modification. Such failure of the connection shaft would result in the TRAS lock being ineffective.

Based on data on the connection shaft failures that have been collected by the airplane manufacturer to date, we have determined that we can best ensure the continued safety of the affected fleet of airplanes by proceeding with rulemaking at this time to propose to require installation of a TRAS lock on the thrust reversers on Model 747–400 series airplanes. The airplane manufacturer is continuing to investigate the failures of the connection shaft. If the investigation reveals that corrective actions are necessary to prevent failure of the connection shaft, we may consider further rulemaking to mandate such corrective actions.

Explanation of Relevant Service Information

We have reviewed and approved Boeing Service Bulletin 747–78–2151, Revision 1, dated August 21, 1997, as revised by Notice of Status Change (NSC) 747–78–2151 NSC 04, dated November 26, 1997, and NSC 747–78–2151 NSC 05, dated December 18, 1997; and Boeing Service Bulletin 747–78–2151, Revision 2, dated January 13, 2000. Those service bulletins describe procedures for completing the installation of and activating a TRAS lock on each thrust reverser. These procedures include replacing a certain microswitch pack with a new one; adding new wires; routing certain new wire bundles; changing certain wiring, circuit breakers, and components; installing thrust-reverser relay panels; and performing repetitive functional tests to ensure that the thrust reverser actuation system operates properly. In addition, those service bulletins refer to several other service bulletins that describe actions that must be accomplished prior to or concurrently with Boeing Service Bulletin 747–78–2151. These service bulletins, which describe various modifications and installations associated with the TRAS locks, are as follows:

- Lockheed Martin Service Bulletin 78–1007, Revision 1, dated March 18, 1997, which describes procedures for installation of a bracket and fastening hardware for the TRAS lock on each thrust reverser.
- Boeing Service Bulletin 747–78–2132, Revision 2, dated December 11, 1997, which describes procedures for installing wiring provisions for the TRAS lock in various areas of the airplane.
- Lockheed Martin Service Bulletin 78–1020, Revision 2, dated March 20, 1997, which describes procedures for installing the TRAS lock (also called an electromechanical lock or brake) and a flexible drive cable on each thrust reverser.
- Boeing Service Bulletin 747–31–2242, dated April 18, 1996, which describes procedures for installing new integrated display system software in six integrated display units and three electronic flight information/engine indication and crew alerting system (EICAS) interface units.
- Boeing Service Bulletin 747–45–2016, Revision 1, dated May 2, 1996, which describes procedures for replacing two central maintenance computers (CMCs) with new, improved CMCs, and installing new software for the CMCs.

Accomplishment of the actions specified in these service bulletins is intended to adequately address the identified unsafe condition.

We also have reviewed and approved Boeing Alert Service Bulletin 747–78A2166, Revision 2, dated March 15, 2001. (AD 2000–09–03 refers to Boeing Service Bulletin 747–78A2166, Revision 1, dated October 9, 1997, as an appropriate source of service information for the functional test of the CDU cone brake and corrective actions on certain airplanes.) Among other things, Revision 2 of the service bulletin includes revised procedures for the functional test of the CDU cone brake that are appropriate for airplanes on

which a TRAS lock has been installed, and procedures for a functional test of the TRAS lock. That service bulletin also specifies corrective action (*e.g.*, replacement of a flexshaft and/or electromechanical gearbox with new or serviceable parts, and/or replacement of the TRAS lock (electromechanical brake) or CDU with new or serviceable parts) if any discrepancy is found during the functional test of the CDU cone brake or TRAS lock. We have revised paragraphs (a) and (c) under the heading ''Requirements of AD 2000–09–03'' in this proposed AD to include Boeing Alert Service Bulletin 747–78A2166, Revision 2, as an acceptable source of service information for actions in those paragraphs.

Explanation of Requirements of Proposed Rule

Since an unsafe condition has been identified that is likely to exist or develop on other products of this same type design, the proposed AD would supersede AD 2000–09–03 to continue to require repetitive tests of the CDU cone brake of the thrust reversers, and corrective actions if necessary. The proposed AD would add requirements for installation of a TRAS lock, and various related modifications and installations. The actions would be required to be accomplished in accordance with the service bulletins described previously, except as discussed below.

Explanation of Differences Between Service Bulletins and Proposed AD

The new actions in this proposed AD would apply to Boeing Model 747–400 series airplanes as listed in Boeing Service Bulletin 747–78–2151, Revision 2. However, the effectivity listings of Boeing Service Bulletins 747–78–2132, Revision 2, 747–31–2242, and 747–45–2016, Revision 1, identify airplanes with line numbers other than those identified in Boeing Service Bulletin 747–78–2151, Revision 2, as being subject to the actions therein. We have coordinated with the airplane manufacturer on this issue, and the manufacturer agrees with our determination that, to be correct and complete, the new actions in paragraph (d) of this proposed AD should apply to Model 747–400 series airplanes as listed in Boeing Service Bulletin 747–78–2151, Revision 2.

Cost Impact

There are approximately 145 airplanes of the affected design in the worldwide fleet. The FAA estimates that 8 airplanes of U.S. registry would be affected by this proposed AD.

The functional test that is currently required by AD 2000–09–03 takes approximately 12 work hours per airplane to accomplish, at an average labor rate of $60 per work hour. Based on these figures, the cost impact of the currently required actions on U.S. operators is estimated to be $5,760, or $720 per airplane, per test cycle.

The installations in Boeing Service Bulletin 747–78–2151, Revision 2, would take approximately 410 work hours per airplane to accomplish, at an average labor rate of $60 per work hour. Required parts would be provided at no charge. Based on these figures, the cost impact of this proposed requirement on U.S. operators is estimated to be $196,800, or $24,600 per airplane.

The installation specified in Lockheed Martin Service Bulletin 78–1007, Revision 1, would take approximately 60 work hours per airplane to accomplish, at an average labor rate of $60 per work hour. Required parts would be provided at no charge. Based on these figures, the cost impact of this proposed requirement on U.S. operators is estimated to be $28,800, or $3,600 per airplane.

The installation specified in Boeing Service Bulletin 747–78–2132, Revision 2, would take approximately 223 work hours per airplane to accomplish, at an average labor rate of $60 per work hour. Required parts would cost between $32,219 and $36,562 per airplane. Based on these figures, the cost impact of this proposed requirement is estimated to be between $45,599 and $49,942 per airplane. The manufacturer may cover the cost of replacement parts associated with this service bulletin, subject to warranty conditions. As a result, the costs attributable to this proposed action may be less than stated above.

The installation specified in Lockheed Martin Service Bulletin 78–1020, Revision 2, would take approximately 16 work hours per airplane to accomplish, at an average labor rate of $60 per work hour. Required parts would be provided at no charge. Based on these figures, the cost impact of this proposed requirement on U.S. operators is estimated to be $7,680, or $960 per airplane.

The installation specified in Boeing Service Bulletin 747–31–2242 would take approximately 2 work hours per airplane to accomplish, at an average labor rate of $60 per work hour. The cost of required parts would be negligible. Based on these figures, the cost impact of this proposed requirement is estimated to be $960, or $120 per airplane. The manufacturer may cover the cost of replacement parts and labor costs associated with accomplishment of this service bulletin, subject to warranty conditions. As a result, the costs attributable to this proposed action may be less than stated.

The installation specified in Boeing Service Bulletin 747–45–2016, Revision 1, would take approximately 3 work hours per airplane to accomplish, at an average labor rate of $60 per work hour. The cost of required parts would be negligible. Based on these figures, the cost impact of this proposed requirement is estimated to be $1,440, or $180 per airplane. The manufacturer may cover the labor costs associated with accomplishment of this service bulletin, subject to warranty conditions. As a result, the costs attributable to this proposed action may be less than stated above.

The functional test that would be required following installation of the TRAS lock would take approximately 12 work hours per airplane to accomplish, at an average labor rate of $60 per work hour. Based on these figures, the cost impact of this proposed requirement is estimated to be $5,760, or $720 per airplane, per test cycle.

The cost impact figures discussed above are based on assumptions that no operator has yet accomplished any of the proposed requirements of this AD action, and that no operator would accomplish those actions in the future if this proposed AD were not adopted. The cost impact figures discussed in AD rulemaking actions represent only the time necessary to perform the specific actions actually required by the AD. These figures typically do not include incidental costs, such as the time required to gain access and close up, planning time, or time necessitated by other administrative actions.

Regulatory Impact

The regulations proposed herein would not have a substantial direct effect on the States, on the relationship between the national Government and the States, or on the distribution of power and responsibilities among the various levels of government. Therefore, it is determined that this proposal would not have federalism implications under Executive Order 13132.

For the reasons discussed above, I certify that this proposed regulation (1) is not a ''significant regulatory action'' under Executive Order 12866; (2) is not a ''significant rule'' under the DOT Regulatory Policies and Procedures (44 FR 11034, February 26, 1979); and (3) if promulgated, will not have a significant economic impact, positive or negative, on a substantial number of small entities under the criteria of the Regulatory Flexibility Act. A copy of the draft

regulatory evaluation prepared for this action is contained in the Rules Docket. A copy of it may be obtained by contacting the Rules Docket at the location provided under the caption **ADDRESSES.**

List of Subjects in 14 CFR Part 39

Air transportation, Aircraft, Aviation safety, Safety.

The Proposed Amendment

Accordingly, pursuant to the authority delegated to me by the Administrator, the Federal Aviation Administration proposes to amend part 39 of the Federal Aviation Regulations (14 CFR part 39) as follows:

PART 39—AIRWORTHINESS DIRECTIVES

1. The authority citation for part 39 continues to read as follows:

Authority: 49 U.S.C. 106(g), 40113, 44701.

§ 39.13 [Amended]

2. Section 39.13 is amended by removing amendment 39–11711 (65 FR 25829, May 4, 2000), and by adding a new airworthiness directive (AD), to read as follows:

Boeing: Docket 2002–NM–128–AD. Supersedes AD 2000–09–03, Amendment 39–11711.

Applicability: Model 747–400 series airplanes equipped with General Electric (GE) Model CF6–80C2 series engines, certificated in any category.

Note 1: This AD applies to each airplane identified in the preceding applicability provision, regardless of whether it has been modified, altered, or repaired in the area subject to the requirements of this AD. For airplanes that have been modified, altered, or repaired so that the performance of the requirements of this AD is affected, the owner/operator must request approval for an alternative method of compliance in accordance with paragraph (h)(1) of this AD. The request should include an assessment of the effect of the modification, alteration, or repair on the unsafe condition addressed by this AD; and, if the unsafe condition has not been eliminated, the request should include specific proposed actions to address it.

Compliance: Required as indicated, unless accomplished previously.

To prevent an inadvertent deployment of a thrust reverser during flight, which could result in loss of control of the airplane, accomplish the following:

Requirements of AD 2000–09–03

Repetitive Functional Tests

(a) Within 1,000 hours time-in-service after the most recent test of the center drive unit (CDU) cone brake as specified in paragraph (b)(1) of AD 94–15–05, amendment 39–8976; or within 650 hours time-in-service after May 19, 2000 (the effective date of AD 2000–09–03, amendment 39–11711); whichever occurs later: Perform a functional test to detect discrepancies of the CDU cone brake on each thrust reverser as specified in paragraph (a)(1) or (a)(2) of this AD, as applicable.

(1) For Model 747–400 series airplanes equipped with thrust reversers that have not been modified in accordance with Boeing Service Bulletin 747–78–2151 or a production equivalent: Perform the test in accordance with Boeing Service Bulletin 747–78A2166, Revision 1, dated October 9, 1997; or paragraph 3.C. of Boeing Alert Service Bulletin 747–78A2166, Revision 2, excluding Evaluation Form, dated March 15, 2001; or the applicable section of paragraph III.A. of the Accomplishment Instructions of Boeing Service Bulletin 747–78A2113, Revision 2, dated June 8, 1995; or Revision 3, dated September 11, 1997. Repeat the test thereafter at intervals not to exceed 650 hours time-in-service.

(2) For Model 747–400 series airplanes equipped with thrust reversers that have been modified in accordance with Boeing Service Bulletin 747–78–2151 or a production equivalent: Perform the test in accordance with Appendix 1 (including Figure 1) of this AD, or paragraph 3.C. of Boeing Alert Service Bulletin 747–78A2166, Revision 2, excluding Evaluation Form, dated March 15, 2001. After the effective date of this AD, only Boeing Alert Service Bulletin 747–78A2166, Revision 2, may be used. Repeat the test thereafter at intervals not to exceed 1,000 hours time-in-service.

Note 2: Accomplishment of the CDU cone brake test during production in accordance with Production Revision Record (PRR) 80452–102 prior to May 19, 2000, is considered acceptable for compliance with the initial test required by paragraph (a) of this AD.

Note 3: Model 747–400 series airplanes, line numbers 1061 and subsequent, equipped with GE CF6–80C2 engines, had a third locking system installed during production in accordance with Production Revision Record (PRR) 80452–102, and were not modified in accordance with Boeing Service Bulletin 747–78–2151 (which is a retrofit action for airplanes having line numbers 700 through 1060 inclusive).

Terminating Action

(b) Accomplishment of the functional test of the CDU cone brake, as specified in paragraph (a) of this AD, constitutes terminating action for the repetitive tests of the CDU cone brake required by paragraph (b)(1) of AD 94–15–05.

Corrective Action

(c) If any functional test required by paragraph (a) of this AD cannot be successfully performed as specified in the referenced service bulletin, or if any discrepancy is detected during any functional test required by paragraph (a) of this AD, accomplish either paragraph (c)(1) or (c)(2) of this AD.

(1) Prior to further flight, repair in accordance with Boeing Service Bulletin 747–78A2166, Revision 1, dated October 9, 1997; Boeing Alert Service Bulletin 747–78A2166, Revision 2, excluding Evaluation Form, dated March 15, 2001; Boeing Service Bulletin 747–78A2113, Revision 2, dated June 8, 1995; or Revision 3, dated September 11, 1997. After the effective date of this AD, only Boeing Alert Service Bulletin 747–78A2166, Revision 2; or Boeing Service Bulletin 747–78A2113, Revision 2 or Revision 3; may be used.

(2) The airplane may be operated in accordance with the provisions and limitations specified in the operator's FAA-approved Minimum Equipment List (MEL), provided that no more than one thrust reverser on the airplane is inoperative.

New Requirements of This AD

Installation of Thrust Reverser Actuator System Lock and Associated Actions

(d) For airplanes listed in Boeing Service Bulletin 747–78–2151, Revision 2, dated January 13, 2000: Within 36 months after the effective date of this AD, do paragraphs (d)(1) and (d)(2) of this AD.

(1) Install and activate a thrust reverser actuator system (TRAS) lock on each thrust reverser per the Accomplishment Instructions of Boeing Service Bulletin 747–78–2151, Revision 1, excluding Evaluation Form, dated August 21, 1997; as revised by Notice of Status Change (NSC) 747–78–2151 NSC 04, dated November 26, 1997; and NSC 747–78–2151 NSC 05, dated December 18, 1997; or Boeing Service Bulletin 747–78–2151, Revision 2, excluding Evaluation Form. The procedures for completing the installation and activating the TRAS lock include replacing a certain microswitch pack with a new one; adding new wires; routing certain new wire bundles; changing certain wiring, circuit breakers, and components; installing thrust-reverser relay panels; and performing a functional test to ensure that the thrust reverser actuation system operates properly.

(2) Prior to or concurrently with the installation required by paragraph (d)(1) of this AD, do the requirements of paragraphs (d)(2)(i), (d)(2)(ii), (d)(2)(iii), (d)(2)(iv), and (d)(2)(v) of this AD.

(i) Install a bracket and fastening hardware for the third locking system on each thrust reverser, per Lockheed Martin Service Bulletin 78–1007, Revision 1, dated March 18, 1997.

(ii) Install wiring provisions in various areas of the airplane, per the Accomplishment Instructions of Boeing Service Bulletin 747–78–2132, Revision 2, excluding Evaluation Form, dated December 11, 1997.

(iii) Install a TRAS lock (also called an electromechanical lock or brake) and a flexible drive cable on each thrust reverser, per Lockheed Martin Service Bulletin 78–1020, Revision 2, dated March 20, 1997.

(iv) Install new integrated display system software in six integrated display units and three electronic flight information/engine indication and crew alerting system (EICAS) interface units, per the Accomplishment Instructions of Boeing Service Bulletin 747–31–2242, dated April 18, 1996.

(v) Replace two central maintenance computers (CMCs), part number 622–8592–103, with new, improved CMCs, part number 622–8592–105, and install new software for the CMCs, per the Accomplishment

Instructions of Boeing Service Bulletin 747–45–2016, Revision 1, dated May 2, 1996.

Repetitive Tests

(e) For airplanes on which a TRAS lock is installed on the thrust reversers: Within 1,000 flight hours after the installation of the TRAS lock, or within 90 flight hours after the effective date of this AD, whichever is later, do a functional test of the TRAS lock (also called an electromechanical lock or brake) per the Accomplishment Instructions of Boeing Alert Service Bulletin 747–78A2166, Revision 2, excluding Evaluation Form, dated March 15, 2001. Then, repeat this test at least every 1,000 flight hours. If the functional test cannot be successfully performed, before further flight, repair per the Accomplishment Instructions of the service bulletin, and repeat the test until it is successful.

Dispatch Limitations

(f) If, prior to accomplishment of Boeing Service Bulletin 747–78–2151 on any airplane, it becomes necessary to install a thrust reverser with the TRAS lock installed, dispatch of the airplane is allowed per the provisions and limitations specified in the 747–400 Master Minimum Equipment List (MMEL), provided that the thrust reverser assembly that has the TRAS lock installed is deactivated per the 747–400 Dispatch Deviation Guide, Boeing Document D6U10151, dated June 28, 2002. Installation of a thrust reverser without a TRAS lock installed and reactivation of the thrust reverser must be accomplished within the time constraints specified in the MMEL.

(g) If, after accomplishment of Boeing Service Bulletin 747–78–2151 on any airplane, it becomes necessary to install a thrust reverser assembly that does not have the TRAS lock installed, dispatch of the airplane is allowed per the provisions and limitations specified in the Boeing Model 747–400 MMEL, provided that the thrust reverser assembly that does not have the TRAS lock installed is deactivated per the 747–400 Dispatch Deviation Guide, Boeing Document D6U10151, dated June 28, 2002. Installation of a thrust reverser with the TRAS lock installed and reactivation of the thrust reverser must be accomplished within the time constraints specified in the MMEL.

Alternative Methods of Compliance

(h)(1) An alternative method of compliance or adjustment of the compliance time that provides an acceptable level of safety may be used if approved by the Manager, Seattle Aircraft Certification Office (ACO), FAA. Operators shall submit their requests through an appropriate FAA Principal Maintenance Inspector, who may add comments and then send it to the Manager, Seattle ACO.

(2) Alternative methods of compliance, approved previously in accordance with AD 2000–09–03, amendment 39–11711, are not considered to be approved as alternative methods of compliance with this AD.

Note 4: Information concerning the existence of approved alternative methods of compliance with this AD, if any, may be obtained from the Seattle ACO.

Special Flight Permits

(i) Special flight permits may be issued in accordance with sections 21.197 and 21.199 of the Federal Aviation Regulations (14 CFR 21.197 and 21.199) to operate the airplane to a location where the requirements of this AD can be accomplished.

Appendix 1.—Thrust Reverser CDU Cone Brake Test

1. This procedure contains steps to do a check of the holding torque of the CDU cone brake.

2. CDU cone brake check (Figure 1):

A. Prepare to do the check:

(1) Open the fan cowl panels.

(2) Pull up on the manual release handle to unlock the electro-mechanical brake.

(3) Pull the manual brake release lever on the CDU to release the cone brake.

Note: This will release the pre-load tension that may occur during a stow cycle.

(4) Return the manual brake release lever to the locked position to engage the cone brake.

(5) Remove the two bolts that hold the lockout plate to the CDU and remove the lockout plate.

(6) Install a ¼-inch drive and a dial-type torque wrench into the CDU drive pad.

Caution: Do not use more than 100 pound-inches of torque when you do this check. Excessive torque will damage the CDU.

(7) Turn the torque wrench to try to manually extend the translating cowl until you get at least 15 pound-inches.

Note: The cone brake prevents movement in the extend direction only. If you try to measure the holding torque in the retract direction, you will get a false reading.

(8) If the torque is less than 15 pound-inches, you must replace the CDU.

(9) Reinstall the lockout plate.

B. Return the airplane to its usual condition:

(1) Fully retract the thrust reverser (unless already accomplished).

(2) Pull down on the manual release handle on the electro-mechanical brake until the handle fully engages the retaining clip (unless already accomplished).

Note: This will lock the electro-mechanical brake.

(3) Close the fan cowl panels.

BILLING CODE 4910–13–P

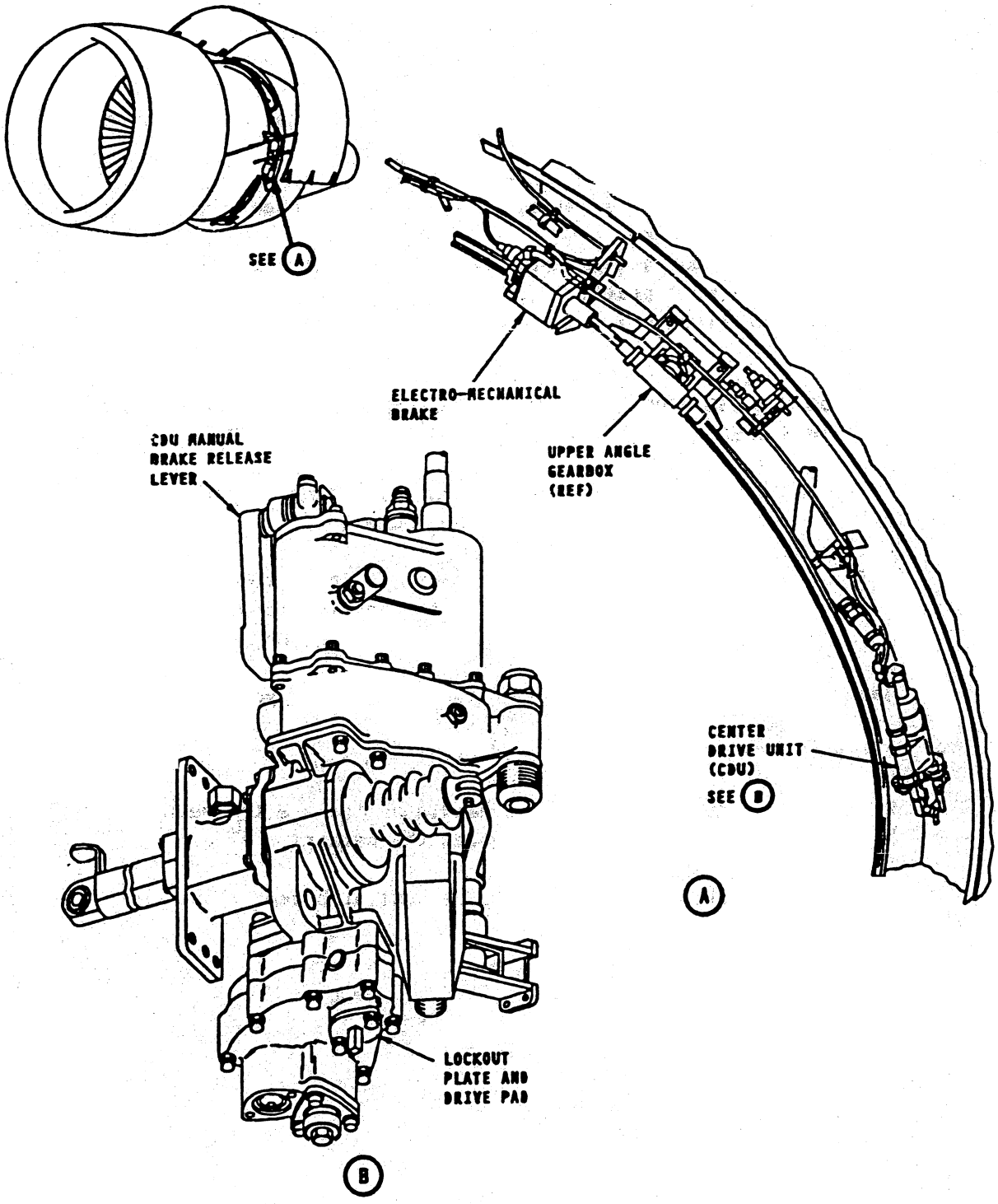

Electro-Mechanical Brake and CDU Cone Brake Torque Check
Figure 1

Issued in Renton, Washington, on January 23, 2003.

Vi L. Lipski,

Manager, Transport Airplane Directorate, Aircraft Certification Service.

[FR Doc. 03–2097 Filed 1–29–03; 8:45 am]

BILLING CODE 4910–13–C

DEPARTMENT OF TRANSPORTATION

Federal Aviation Administration

14 CFR Part 39

[Docket No. 2002–NM–112–AD]

RIN 2120–AA64

Airworthiness Directives; Bombardier Model CL–600–2B19 Series Airplanes

AGENCY: Federal Aviation Administration, DOT.

ACTION: Notice of proposed rulemaking (NPRM).

SUMMARY: This document proposes the adoption of a new airworthiness directive (AD) that is applicable to certain Bombardier Model CL–600–2B19 series airplanes. This proposal would require a one-time general visual inspection of the dust covers for the flight data recorder (FDR) and cockpit voice recorder (CVR) equipment for the presence of markings that indicate the presence of a chemical-resistant coating, and corrective actions if necessary. This action is necessary to prevent stripping of the paint and markings from the dust covers for FDR and CVR equipment due to hydraulic mist from the actuators, which could result in the inability to identify FDR and CVR equipment in the event of an accident-recovery mission. The lack of data from FDR and CVR equipment could hamper discovery of the unsafe condition that caused an accident or an incident and prevent the FAA from developing and mandating actions to prevent additional accidents or incidents caused by that same unsafe condition. This action is intended to address the identified unsafe condition.

DATES: Comments must be received by March 3, 2003.

ADDRESSES: Submit comments in triplicate to the Federal Aviation Administration (FAA), Transport Airplane Directorate, ANM–114, Attention: Rules Docket No. 2002–NM–112–AD, 1601 Lind Avenue, SW., Renton, Washington 98055–4056. Comments may be inspected at this location between 9 a.m. and 3 p.m., Monday through Friday, except Federal holidays. Comments may be submitted via fax to (425) 227–1232. Comments may also be sent via the Internet using the following address: *9–anm–nprmcomment@faa.gov.* Comments sent via fax or the Internet must contain ''Docket No. 2002–NM–112–AD'' in the subject line and need not be submitted in triplicate. Comments sent via the Internet as attached electronic files must be formatted in Microsoft Word 97 for Windows or ASCII text.

The service information referenced in the proposed rule may be obtained from Bombardier, Inc., Canadair, Aerospace Group, P.O. Box 6087, Station Centre-ville, Montreal, Quebec H3C 3G9, Canada. This information may be examined at the FAA, Transport Airplane Directorate, 1601 Lind Avenue, SW., Renton, Washington; or at the FAA, New York Aircraft Certification Office, 10 Fifth Street, Third Floor, Valley Stream, New York.

FOR FURTHER INFORMATION CONTACT: Luciano L. Castracane, Aerospace Engineer, Systems and Flight Test Branch, ANE–172, FAA, New York Aircraft Certification Office, 10 Fifth Street, Third Floor, Valley Stream, New York 11581; telephone (516) 256–7535; fax (516) 568–2716.

SUPPLEMENTARY INFORMATION:

Comments Invited

Interested persons are invited to participate in the making of the proposed rule by submitting such written data, views, or arguments as they may desire. Communications shall identify the Rules Docket number and be submitted in triplicate to the address specified above. All communications received on or before the closing date for comments, specified above, will be considered before taking action on the proposed rule. The proposals contained in this action may be changed in light of the comments received.

Submit comments using the following format:

- Organize comments issue-by-issue. For example, discuss a request to change the compliance time and a request to change the service bulletin reference as two separate issues.
- For each issue, state what specific change to the proposed AD is being requested.
- Include justification (*e.g.*, reasons or data) for each request.

Comments are specifically invited on the overall regulatory, economic, environmental, and energy aspects of the proposed rule. All comments submitted will be available, both before and after the closing date for comments, in the Rules Docket for examination by interested persons. A report summarizing each FAA-public contact concerned with the substance of this proposal will be filed in the Rules Docket.

Commenters wishing the FAA to acknowledge receipt of their comments submitted in response to this action must submit a self-addressed, stamped postcard on which the following statement is made: ''Comments to Docket Number 2002–NM–112–AD.'' The postcard will be date stamped and returned to the commenter.

Availability of NPRMs

Any person may obtain a copy of this NPRM by submitting a request to the FAA, Transport Airplane Directorate, ANM–114, Attention: Rules Docket No. 2002–NM–112–AD, 1601 Lind Avenue, SW., Renton, Washington 98055–4056.

Discussion

Transport Canada Civil Aviation (TCCA), which is the airworthiness authority for Canada, notified the FAA that an unsafe condition may exist on certain Bombardier Model CL–600–2B19 series airplanes. TCCA advises that the environment within the aft equipment compartment has proven conducive to stripping the orange paint and markings from the dust covers for the flight data recorder (FDR) and cockpit voice recorder (CVR) equipment. Reports indicate that such stripping of the FDR and CVR dust covers are due to hydraulic mist from the actuators. Additional information indicates that engine oil spills could also be a factor. A protective coating applied to the dust covers will prevent stripping of the paint and markings from the FDR and CVR dust covers. Such stripping, if not corrected, could result in the inability to identify the FDR and CVR equipment in the event of an accident-recovery mission. Identification of the FDR and CVR equipment is essential in order to recover the information necessary for evaluating the specific and related causes of an accident so that such occurrences can be prevented in the future.

FAA's Determination of Unsafe Condition

This action is necessary to prevent the loss of data recorded on the FDR and CVR equipment. The FAA uses the data collected on the FDR and CVR to analyze events leading up to and during airplane accidents in an effort to identify the cause of the accident. Based on FDR and CVR data, we can develop and mandate certain actions to prevent additional accidents. Although the loss of FDR and CVR data does not directly affect the safety of the airplane, the installation of dust covers per this

proposed AD will prevent stripping of the paint and markings from the dust covers for the FDR and CVR that could make it difficult or impossible to identify, recover, and analyze data from the recorder. The lack of data would make it difficult for us to then take appropriate corrective actions to prevent similar accidents in the future. Therefore, we have determined that the proposed action is necessary.

It should be noted that the purpose of this proposed action is not to enhance the safety of Bombardier Model CL–600–2B19 series airplanes, but rather to restore the level of safety provided by the FDR and CVR equipment that have been treated with a protective coating to ensure identification of such equipment. Therefore, this proposed AD is the appropriate regulatory vehicle to achieve this purpose.

Explanation of Relevant Service Information

Bombardier has issued two service bulletins, both dated October 12, 2001, which are described as follows:

- Canadair Regional Jet Service Bulletin 601R–31–026, including the Service Bulletin Comment Sheet—Facsimile Reply Sheet and the CRJ 100/200 Service Bulletin Compliance Facsimile Reply Sheet, describes procedures for a general visual inspection of the FDR dust cover for the presence of markings that indicate the presence of a chemical-resistant coating, and corrective actions if necessary. Corrective actions include either reworking the FDR dust cover, or replacing the dust cover with a new dust cover.
- Canadair Regional Jet Service Bulletin 601R–23–056, including the Service Bulletin Comment Sheet—Facsimile Reply Sheet and the CRJ 100/200 Service Bulletin Compliance Facsimile Reply Sheet, describes procedures for a general visual inspection of the CVR dust cover for the presence of markings that indicate the presence of a chemical-resistant coating, and corrective actions if necessary. Corrective actions include either reworking the CVR dust cover, or replacing the dust cover with a new dust cover.

Accomplishment of the actions specified in the service bulletins is intended to adequately address the identified unsafe condition. TCCA classified these service bulletins as mandatory and issued Canadian airworthiness directive CF–2001–45, dated December 3, 2001, in order to assure the continued airworthiness of these airplanes in Canada.

FAA's Conclusions

This airplane model is manufactured in Canada and is type certificated for operation in the United States under the provisions of section 21.29 of the Federal Aviation Regulations (14 CFR 21.29) and the applicable bilateral airworthiness agreement. Pursuant to this bilateral airworthiness agreement, TCCA has kept the FAA informed of the situation described above. The FAA has examined the findings of TCCA, reviewed all available information, and determined that AD action is necessary for products of this type design that are certificated for operation in the United States.

Explanation of Requirements of Proposed Rule

Since an unsafe condition has been identified that is likely to exist or develop on other airplanes of the same type design registered in the United States, the proposed AD would require accomplishment of the actions specified in the service bulletins described previously, except as discussed below.

Difference Between Service Bulletins and Proposed Rule

Operators should note that the Accomplishment Instructions of the referenced service bulletins describe procedures for completing the Comment Sheet—Facsimile Reply Sheet, and CRJ 100/200 Service Bulletin Compliance Facsimile Reply Sheet. However, this proposed AD would not require such action.

Cost Impact

There are approximately 570 Model CL–600–2B19 series airplanes of the affected design in the worldwide fleet. The FAA estimates that 220 airplanes of U.S. registry would be affected by this proposed AD.

It would take approximately 1 work hour per airplane to accomplish the proposed inspection at an average labor rate of $60 per work hour. Based on these figures, the cost impact of the proposed AD on U.S. operators is estimated to be $132,000, or $60 per airplane.

The cost impact figure discussed above is based on assumptions that no operator has yet accomplished any of the proposed requirements of this AD action, and that no operator would accomplish those actions in the future if this AD were not adopted. However, for affected airplanes within the period under the warranty agreement, the FAA has been advised that manufacturer has committed previously to its customers that it will bear the cost of replacement parts. The cost impact figures discussed in AD rulemaking actions represent only the time necessary to perform the specific actions actually required by the AD. These figures typically do not include incidental costs, such as the time required to gain access and close up, planning time, or time necessitated by other administrative actions.

Regulatory Impact

The regulations proposed herein would not have a substantial direct effect on the States, on the relationship between the national Government and the States, or on the distribution of power and responsibilities among the various levels of government. Therefore, it is determined that this proposal would not have federalism implications under Executive Order 13132.

For the reasons discussed above, I certify that this proposed regulation (1) is not a ''significant regulatory action'' under Executive Order 12866; (2) is not a ''significant rule'' under the DOT Regulatory Policies and Procedures (44 FR 11034, February 26, 1979); and (3) if promulgated, will not have a significant economic impact, positive or negative, on a substantial number of small entities under the criteria of the Regulatory Flexibility Act. A copy of the draft regulatory evaluation prepared for this action is contained in the Rules Docket. A copy of it may be obtained by contacting the Rules Docket at the location provided under the caption **ADDRESSES.**

List of Subjects in 14 CFR Part 39

Air transportation, Aircraft, Aviation safety, Safety.

The Proposed Amendment

Accordingly, pursuant to the authority delegated to me by the Administrator, the Federal Aviation Administration proposes to amend part 39 of the Federal Aviation Regulations (14 CFR part 39) as follows:

PART 39—AIRWORTHINESS DIRECTIVES

1. The authority citation for part 39 continues to read as follows:

Authority: 49 U.S.C. 106(g), 40113, 44701.

§ 39.13 [Amended]

2. Section 39.13 is amended by adding the following new airworthiness directive:

Bombardier, Inc. (Formerly Canadair): Docket 2002–NM–112–AD.

Applicability: Model CL–600–2B19 airplanes, serial numbers 7003 through 7573 inclusive, certificated in any category.

Note 1: This AD applies to each airplane identified in the preceding applicability provision, regardless of whether it has been

modified, altered, or repaired in the area subject to the requirements of this AD. For airplanes that have been modified, altered, or repaired so that the performance of the requirements of this AD is affected, the owner/operator must request approval for an alternative method of compliance in accordance with paragraph (d) of this AD. The request should include an assessment of the effect of the modification, alteration, or repair on the unsafe condition addressed by this AD; and, if the unsafe condition has not been eliminated, the request should include specific proposed actions to address it.

Compliance: Required as indicated, unless accomplished previously.

To prevent peeling of the paint and markings from the dust covers for the flight data recorder (FDR) and cockpit voice recorder (CVR) equipment due to hydraulic mist from the actuators, which could result in the inability to identify the FDR and CVR equipment in the event of an accident-recovery mission, accomplish the following:

One-Time Inspection and Corrective Actions

(a) For airplanes having serial numbers 7003 through 7067 inclusive, and 7069 through 7570 inclusive: Within 18 months after the effective date of this AD, do a general visual inspection of the dust cover for the FDR to determine if a chemical agent resistant coating has been applied to the dust cover. Dust covers that have had a protective coating applied are identified through the markings specified in the service bulletin. Do the inspection per Part A of the Accomplishment Instructions of Canadair Regional Jet Service Bulletin 601R–31–026, dated October 12, 2001; excluding the Service Bulletin Comment Sheet—Facsimile Reply Sheet and the CRJ 100/200 Service Bulletin Compliance Facsimile Reply Sheet.

(1) If specified markings are present, no further action is required by this paragraph.

(2) If specified markings are not present, before further flight, do the action required by either paragraph (a)(2)(i) or (a)(2)(ii) of this AD:

(i) Rework the FDR dust cover per Part B of the Accomplishment Instructions of the service bulletin; or

(ii) Replace the FDR dust cover with a new dust cover per Part C of the Accomplishment Instructions of the service bulletin.

Note 2: For the purposes of this AD, a general visual inspection is defined as: ''A visual examination of an interior or exterior area, installation, or assembly to detect obvious damage, failure, or irregularity. This level of inspection is made from within touching distance unless otherwise specified. A mirror may be necessary to enhance visual access to all exposed surfaces in the inspection area. This level of inspection is made under normally available lighting conditions such as daylight, hangar lighting, flashlight, or droplight and may require removal or opening of access panels or doors. Stands, ladders, or platforms may be required to gain proximity to the area being checked.''

(b) For airplanes having serial numbers 7003 through 7067 inclusive, and 7069 through 7573 inclusive: Within 18 months after the effective date of this AD, do a general visual inspection of the CVR dust cover to determine if a chemical agent resistant coating has been applied to the dust cover. Dust covers that have had a protective coating applied are identified through the markings specified in the service bulletin. Do the inspection per Part A of the Accomplishment Instructions of Bombardier Canadair Regional Jet Service Bulletin 601R–23–056, dated October 12, 2001; excluding Comment Sheet—Facsimile Reply Sheet, and CRJ 100/200 Service Bulletin Compliance Facsimile Reply Sheet.

(1) If specified markings are present, no further action is required by this paragraph.

(2) If specified markings are not present, before further flight, do the action required by either paragraph (b)(2)(i) or (b)(2)(ii) of this AD:

(i) Rework the CVR dust cover per Part B of the Accomplishment Instructions of the service bulletin; or

(ii) Replace the CVR dust cover with a new dust cover per Part C of the Accomplishment Instructions of the service bulletin.

Parts Installation

(c) As of the effective date of this AD, no person shall install an FDR dust cover, part number (P/N) 074E0198–00; or a CVR dust cover, P/N 075E0604–00 or 9300A218S; unless the rework action required by paragraphs (a)(2)(i) and (b)(2)(i) of this AD, as applicable, has been done.

Alternative Methods of Compliance

(d) An alternative method of compliance or adjustment of the compliance time that provides an acceptable level of safety may be used if approved by the Manager, New York Aircraft Certification Office (ACO), FAA. Operators shall submit their requests through an appropriate FAA Principal Maintenance Inspector, who may add comments and then send it to the Manager, New York ACO.

Note 3: Information concerning the existence of approved alternative methods of compliance with this AD, if any, may be obtained from the New York ACO.

Special Flight Permits

(e) Special flight permits may be issued in accordance with sections 21.197 and 21.199 of the Federal Aviation Regulations (14 CFR 21.197 and 21.199) to operate the airplane to a location where the requirements of this AD can be accomplished.

Note 4: The subject of this AD is addressed in Canadian airworthiness directive CF–2001–45, dated December 3, 2001.

Issued in Renton, Washington, on January 23, 2003.

Vi L. Lipski,

Manager, Transport Airplane Directorate, Aircraft Certification Service

[FR Doc. 03–2098 Filed 1–29–03; 8:45 am]

BILLING CODE 4910–13–P

DEPARTMENT OF TRANSPORTATION

Federal Aviation Administration

14 CFR Part 39

[Docket No. 2001–NM–269–AD]

RIN 2120–AA64

Airworthiness Directives; Dassault Model Falcon 900 EX and Mystere-Falcon 900 Series Airplanes

AGENCY: Federal Aviation Administration, DOT.

ACTION: Notice of proposed rulemaking (NPRM).

SUMMARY: This document proposes the adoption of a new airworthiness directive (AD) that is applicable to certain Dassault Model Falcon 900 EX and Mystere-Falcon 900 series airplanes. This proposal would require installing an attachment support assembly for the fire extinguishing piping in the baggage compartment. This action is necessary to prevent distortion of the fire extinguishing discharge nozzle as a result of the nozzle not being secure, which could result in poor diffusion of the fire extinguishing agent in the event of a fire in the baggage compartment. This action is intended to address the identified unsafe condition.

DATES: Comments must be received by March 3, 2003.

ADDRESSES: Submit comments in triplicate to the Federal Aviation Administration (FAA), Transport Airplane Directorate, ANM–114, Attention: Rules Docket No. 2001–NM–269–AD, 1601 Lind Avenue, SW., Renton, Washington 98055–4056. Comments may be inspected at this location between 9 a.m. and 3 p.m., Monday through Friday, except Federal holidays. Comments may be submitted via fax to (425) 227–1232. Comments may also be sent via the Internet using the following address: *9-anm-nprmcomment@faa.gov.* Comments sent via fax or the Internet must contain ''Docket No. 2001–NM–269–AD'' in the subject line and need not be submitted in triplicate. Comments sent via the Internet as attached electronic files must be formatted in Microsoft Word 97 for Windows or ASCII text.

The service information referenced in the proposed rule may be obtained from Dassault Falcon Jet, PO Box 2000, South Hackensack, New Jersey 07606. This information may be examined at the FAA, Transport Airplane Directorate, 1601 Lind Avenue, SW., Renton, Washington.

FOR FURTHER INFORMATION CONTACT: Dan Rodina, Aerospace Engineer, International Branch, ANM–116, FAA, Transport Airplane Directorate, 1601 Lind Avenue, SW., Renton, Washington 98055–4056; telephone (425) 227–2125; fax (425) 227–1149.

SUPPLEMENTARY INFORMATION:

Comments Invited

Interested persons are invited to participate in the making of the proposed rule by submitting such written data, views, or arguments as they may desire. Communications shall identify the Rules Docket number and be submitted in triplicate to the address specified above. All communications received on or before the closing date for comments, specified above, will be considered before taking action on the proposed rule. The proposals contained in this action may be changed in light of the comments received.

Submit comments using the following format:

- Organize comments issue-by-issue. For example, discuss a request to change the compliance time and a request to change the service bulletin reference as two separate issues.
- For each issue, state what specific change to the proposed AD is being requested.
- Include justification (*e.g.*, reasons or data) for each request.

Comments are specifically invited on the overall regulatory, economic, environmental, and energy aspects of the proposed rule. All comments submitted will be available, both before and after the closing date for comments, in the Rules Docket for examination by interested persons. A report summarizing each FAA-public contact concerned with the substance of this proposal will be filed in the Rules Docket.

Commenters wishing the FAA to acknowledge receipt of their comments submitted in response to this action must submit a self-addressed, stamped postcard on which the following statement is made: ''Comments to Docket Number 2001–NM–269–AD.'' The postcard will be date stamped and returned to the commenter.

Availability of NPRMs

Any person may obtain a copy of this NPRM by submitting a request to the FAA, Transport Airplane Directorate, ANM–114, Attention: Rules Docket No. 2001–NM–269–AD, 1601 Lind Avenue, SW., Renton, Washington 98055–4056.

Discussion

The Direction Générale de l'Aviation Civile (DGAC), which is the airworthiness authority for France, notified the FAA that an unsafe condition may exist on certain Dassault Model Falcon 900 EX and Model Mystere-Falcon 900 series airplanes. The DGAC advises of a reported case where, after the fire extinguisher for the baggage compartment discharged, the discharge nozzle for the fire extinguishing piping through which the fire extinguishing agent passes, was found damaged. Distortion of the discharge nozzle occurred at the bulkhead feedthrough at frame 30 because the nozzle was not secure. This condition, if not corrected, could result in poor diffusion of the fire extinguishing agent in the event of a fire in the baggage compartment.

Explanation of Relevant Service Information

Dassault has issued Service Bulletins F900EX–142 (for Model Falcon 900 EX series airplanes) and F900–279 (for Model Mystere-Falcon 900 series airplanes), both dated June 7, 2001, including Service Bulletins Compliance page, which describe procedures for installing an attachment support assembly for the fire extinguishing piping in the baggage compartment, and submitting a compliance report to Dassault. Accomplishment of the actions specified in the applicable service bulletin is intended to adequately address the identified unsafe condition. The DGAC classified these service bulletins as mandatory and issued French airworthiness directive 2001–192–034(B), dated May 16, 2001, in order to assure the continued airworthiness of these airplanes in France.

FAA's Conclusions

These airplane models are manufactured in France and are type certificated for operation in the United States under the provisions of section 21.29 of the Federal Aviation Regulations (14 CFR 21.29) and the applicable bilateral airworthiness agreement. Pursuant to this bilateral airworthiness agreement, the DGAC has kept the FAA informed of the situation described above. The FAA has examined the findings of the DGAC, reviewed all available information, and determined that AD action is necessary for products of this type design that are certificated for operation in the United States.

Explanation of Requirements of Proposed Rule

Since an unsafe condition has been identified that is likely to exist or develop on other airplanes of the same type design registered in the United States, the proposed AD would require accomplishment of the actions specified in the applicable service bulletin described previously.

Differences Between Proposed Rule and Service Bulletin

Operators should note that, although the Accomplishment Instructions of the referenced service bulletin describe procedures for completing and submitting a compliance report, this proposed AD would not require such reporting.

Cost Impact

The FAA estimates that 150 airplanes of U.S. registry would be affected by this proposed AD, that it would take approximately 3 work hours per airplane to accomplish the proposed actions, and that the average labor rate is $60 per work hour. Required parts would be provided by the manufacturer at no cost to the operators. Based on these figures, the cost impact of the proposed AD on U.S. operators is estimated to be $27,000, or $180 per airplane.

The cost impact figure discussed above is based on assumptions that no operator has yet accomplished any of the proposed requirements of this AD action, and that no operator would accomplish those actions in the future if this proposed AD were not adopted. The cost impact figures discussed in AD rulemaking actions represent only the time necessary to perform the specific actions actually required by the AD. These figures typically do not include incidental costs, such as the time required to gain access and close up, planning time, or time necessitated by other administrative actions.

Regulatory Impact

The regulations proposed herein would not have a substantial direct effect on the States, on the relationship between the national Government and the States, or on the distribution of power and responsibilities among the various levels of government. Therefore, it is determined that this proposal would not have federalism implications under Executive Order 13132.

For the reasons discussed above, I certify that this proposed regulation (1) is not a ''significant regulatory action'' under Executive Order 12866; (2) is not a ''significant rule'' under the DOT Regulatory Policies and Procedures (44 FR 11034, February 26, 1979); and (3) if promulgated, will not have a significant economic impact, positive or negative, on a substantial number of small entities under the criteria of the Regulatory

Flexibility Act. A copy of the draft regulatory evaluation prepared for this action is contained in the Rules Docket. A copy of it may be obtained by contacting the Rules Docket at the location provided under the caption **ADDRESSES.**

List of Subjects in 14 CFR Part 39

Air transportation, Aircraft, Aviation safety, Safety.

The Proposed Amendment

Accordingly, pursuant to the authority delegated to me by the Administrator, the Federal Aviation Administration proposes to amend part 39 of the Federal Aviation Regulations (14 CFR part 39) as follows:

PART 39—AIRWORTHINESS DIRECTIVES

1. The authority citation for part 39 continues to read as follows:

Authority: 49 U.S.C. 106(g), 40113, 44701.

§ 39.13 [Amended]

2. Section 39.13 is amended by adding the following new airworthiness directive:

Dassault Aviation: Docket 2001–NM–269–AD.

Applicability: Model Falcon 900 EX and Mystere-Falcon 900 series airplanes, certificated in any category; excluding those airplanes on which the modification specified in Dassault Service Bulletin F900EX–142 (Modification F900 EX M3368), or Dassault Service Bulletin F900–279 (Modification MF900 M3368); both dated June 7, 2001; as applicable; has been done.

Note 1: This AD applies to each airplane identified in the preceding applicability provision, regardless of whether it has been otherwise modified, altered, or repaired in the area subject to the requirements of this AD. For airplanes that have been modified, altered, or repaired so that the performance of the requirements of this AD is affected, the owner/operator must request approval for an alternative method of compliance in accordance with paragraph (b) of this AD. The request should include an assessment of the effect of the modification, alteration, or repair on the unsafe condition addressed by this AD; and, if the unsafe condition has not been eliminated, the request should include specific proposed actions to address it.

Compliance: Required as indicated, unless accomplished previously.

To prevent distortion of the fire extinguishing discharge nozzle as a result of the nozzle not being secure, which could result in poor diffusion of the fire extinguishing agent in the event of a fire in the baggage compartment, accomplish the following:

Installation

(a) Within 7 months or 330 flight hours after the effective date of this AD, whichever comes first, install an attachment support assembly for the fire extinguishing piping in the baggage compartment per paragraphs 2.A. through 2.C. of the Accomplishment Instructions of Dassault Service Bulletin F900EX–142 (for Model Falcon 900 EX series airplanes); or Dassault Service Bulletin F900–279 (for Model Mystere-Falcon F900 series airplanes); both dated June 7, 2001; including Service Bulletins Compliance page; as applicable.

Alternative Methods of Compliance

(b) An alternative method of compliance or adjustment of the compliance time that provides an acceptable level of safety may be used if approved by the Manager, International Branch, ANM–116, Transport Airplane Directorate, FAA. Operators shall submit their requests through an appropriate FAA Principal Maintenance Inspector, who may add comments and then send it to the Manager, International Branch, ANM–116.

Note 2: Information concerning the existence of approved alternative methods of compliance with this AD, if any, may be obtained from the International Branch, ANM–116.

Special Flight Permits

(c) Special flight permits may be issued in accordance with sections 21.197 and 21.199 of the Federal Aviation Regulations (14 CFR 21.197 and 21.199) to operate the airplane to a location where the requirements of this AD can be accomplished.

Note 3: The subject of this AD is addressed in French airworthiness directive 2001–192–034(B), dated May 16, 2001.

Issued in Renton, Washington, on January 24, 2003.

Ali Bahrami,

Acting Manager, Transport Airplane Directorate, Aircraft Certification Service.

[FR Doc. 03–2148 Filed 1–29–03; 8:45 am]

BILLING CODE 4910–13–P

DEPARTMENT OF TRANSPORTATION

Federal Aviation Administration

14 CFR Part 71

[Docket No. FAA–2002–13994; Airspace Docket No. 02–AAL–10]

RIN 2120–AA66

Proposed Establishment of Colored Federal Airways; AK

AGENCY: Federal Aviation Administration (FAA), DOT.

ACTION: Notice of proposed rulemaking (NPRM).

SUMMARY: This notice proposes to establish two colored Federal airways, Amber–5 (A–5) and Blue 1 (B–1), in Alaska. This action would add to the instrument flight rules (IFR) airway and route structure in Alaska. The FAA is taking this action to enhance safety and the management of aircraft operations in Alaska.

DATES: Comments must be received on or before March 17, 2003.

ADDRESSES: Send comments on this proposal to the Docket Management System, U.S. Department of Transportation, Room Plaza 401, 400 Seventh Street, SW., Washington, DC 20590–0001. You must identify the docket number FAA–2002–13994/Airspace Docket No. 02–AAL–10, at the beginning of your comments.

You may also submit comments on the Internet at *http://dms.dot.gov.* You may review the public docket containing the proposal, any comments received, and any final disposition in person in the Dockets Office between 9 a.m. and 5 p.m., Monday through Friday, except Federal holidays. The Docket Office (telephone 1–800–647–5527) is on the plaza level of the Department of Transportation NASSIF Building at the above address.

An informal docket may also be examined during normal business hours at the office of the Regional Air Traffic Division, Federal Aviation Administration, 222 West 7th Avenue, #14, Anchorage, AK 99533.

FOR FURTHER INFORMATION CONTACT: Ken McElroy, Airspace and Rules Division, ATA–400, Office of Air Traffic Airspace Management, Federal Aviation Administration, 800 Independence Avenue, SW., Washington, DC 20591; telephone: (202) 267–8783.

SUPPLEMENTARY INFORMATION:

Comments Invited

Interested parties are invited to participate in this proposed rulemaking by submitting such written data, views, or arguments as they may desire. Comments that provide the factual basis supporting the views and suggestions presented are particularly helpful in developing reasoned regulatory decisions on the proposal. Comments are specifically invited on the overall regulatory, aeronautical, economic, environmental, and energy-related aspects of the proposal.

Communications should identify both docket numbers and be submitted in triplicate to the address listed above. Commenters wishing the FAA to acknowledge receipt of their comments on this notice must submit with those comments a self-addressed, stamped postcard on which the following statement is made: ''Comments to Docket No. FAA–2002–13994/Airspace Docket No. 02–AAL–10.'' The postcard will be date/time stamped and returned to the commenter. All communications received on or before the specified

closing date for comments will be considered before taking action on the proposed rule.

The proposal contained in this notice may be changed in light of comments received. All comments submitted will be available for examination in the public docket both before and after the closing date for comments. A report summarizing each substantive public contact with FAA personnel concerned with this rulemaking will be filed in the docket.

Availability of NPRM's

An electronic copy of this document may be downloaded through the Internet at *http://dms.dot.gov.* Recently published rulemaking documents can also be accessed through the FAA's web page at *http://www.faa.gov* or the Superintendent of Document's web page at *http://www.access.gpo.gov/nara.*

Additionally, any person may obtain a copy of this notice by submitting a request to the Federal Aviation Administration, Office of Air Traffic Airspace Management, ATA–400, 800 Independence Avenue, SW., Washington, DC 20591, or by calling (202) 267–8783. Communications must identify both docket numbers for this notice. Persons interested in being placed on a mailing list for future NPRM's should contact the FAA's Office of Rulemaking, (202) 267–9677, to request a copy of Advisory Circular No. 11–2A, Notice of Proposed Rulemaking Distribution System, which describes the application procedure.

The Proposal

The FAA is proposing to amend Title 14 Code of Federal Regulations (CFR) part 71 (part 71) by establishing two colored Federal airways, A–5 and B–1, in Alaska. Presently there are several uncharted nonregulatory routes that use the same routing as the proposed colored Federal airways. These uncharted nonregulatory routes are used daily by commercial and general aviation aircraft. However, the air traffic control (ATC) management of aircraft operations is limited on these routes. The FAA is proposing to convert these uncharted nonregulatory routes to colored Federal airways. This action would add to the IFR airway and route structure in Alaska. The routes conversion would provide an airway structure to support existing commercial services in Alaska.

Additionally, adoption of these Federal airways would: (1) Provide pilots with minimum en route altitudes and minimum obstruction clearance altitudes information; (2) establish controlled airspace thus eliminating some of the commercial IFR operations in uncontrolled airspace; and (3) improve the management of air traffic operations and thereby enhance safety.

Colored Federal airways are published in paragraph 6009 of FAA Order 7400.9K dated August 30, 2002, and effective September 16, 2002, which is incorporated by reference in 14 CFR Section 71.1. The colored Federal airways listed in this document would be published subsequently in the order.

The FAA has determined that this proposed regulation only involves an established body of technical regulations for which frequent and routine amendments are necessary to keep them operationally current. Therefore, this proposed regulation: (1) Is not a ''significant regulatory action'' under Executive Order 12866; (2) is not a ''significant rule'' under DOT Regulatory Policies and Procedures (44 FR 11034; February 26, 1979); and (3) does not warrant preparation of a regulatory evaluation as the anticipated impact is so minimal. Since this is a routine matter that will only affect air traffic procedures and air navigation, it is certified that this proposed rule, when promulgated, will not have a significant economic impact on a substantial number of small entities under the criteria of the Regulatory Flexibility Act.

List of Subjects in 14 CFR Part 71

Airspace, Incorporation by reference, Navigation (air).

The Proposed Amendment

In consideration of the foregoing, the Federal Aviation Administration proposes to amend 14 CFR part 71 as follows:

PART 71—DESIGNATION OF CLASS A, CLASS B, CLASS C, CLASS D, AND CLASS E AIRSPACE AREAS; AIRWAYS; ROUTES; AND REPORTING POINTS

1. The authority citation for part 71 continues to read as follows:

Authority: 49 U.S.C. 106(g), 40103, 40113, 40120; E.O. 10854, 24 FR 9565, 3 CFR, 1959–1963 Comp., p. 389.

§ 71.1 [Amended]

2. The incorporation by reference in 14 CFR 71.1 of the FAA Order 7400.9K, Airspace Designations and Reporting Points, dated August 30, 2002, and effective September 16, 2002, is amended as follows:

Paragraph 6009(c)—Amber Federal Airways

* * * * *

A–5 [New]

From Ambler, AK, NDB to Evansville, AK, NDB.

* * * * *

Paragraph 6009(d)—Blue Federal Airways

* * * * *

B–1 [New]

From Woody Island, AK, NDB to Iliamna, AK, NDB.

* * * * *

Issued in Washington, DC, on January 23, 2003.

Reginald C. Matthews,

Manager, Airspace and Rules Division.

[FR Doc. 03–2189 Filed 1–29–03; 8:45 am]

BILLING CODE 4910–13–P

DEPARTMENT OF TRANSPORTATION

Federal Aviation Administration

14 CFR Part 71

[Docket No. FAA–2002–14010; Airspace Docket No. 02–AAL–09]

RIN 2120–AA66

Proposed Modification and Revocation of Federal Airways; AK

AGENCY: Federal Aviation Administration (FAA), DOT.

ACTION: Notice of proposed rulemaking (NPRM).

SUMMARY: This notice proposes to revoke two Very High Frequency Omnidirectional Range (VOR) Federal airways, Victor 307 and 362 (V–307 and V–362); and revise Victor 317 (V–317) and Colored Federal Airway Amber 15 (A–15) in Alaska. The FAA is proposing this action due to the decommissioning of the McInnes Nondirectional Radio Beacon (NDB), Canada.

DATES: Comments must be received on or before March 17, 2003.

ADDRESSES: Send comments on this proposal to the Docket Management System, U.S. Department of Transportation, Room Plaza 401, 400 Seventh Street, SW., Washington, DC 20590–0001. You must identify the docket number FAA–2002–14010/ Airspace Docket No. 02–AAL–9, at the beginning of your comments.

You may also submit comments on the Internet at *http://dms.dot.gov.* You may review the public docket containing the proposal, any comments received, and any final disposition in person in the Dockets Office between 9 a.m. and 5 p.m., Monday through Friday, except Federal holidays. The Docket Office (telephone 1–800–647–5527) is on the plaza level of the

Department of Transportation NASSIF Building at the above address.

An informal docket may also be examined during normal business hours at the office of the Regional Air Traffic Division, Federal Aviation Administration, 222 West 7th Avenue, #14, Anchorage, AK 99533.

FOR FURTHER INFORMATION CONTACT: Ken McElroy, Airspace and Rules Division, ATA–400, Office of Air Traffic Airspace Management, Federal Aviation Administration, 800 Independence Avenue, SW., Washington, DC 20591; telephone: (202) 267–8783.

SUPPLEMENTARY INFORMATION:

Comments Invited

Interested parties are invited to participate in this proposed rulemaking by submitting such written data, views, or arguments as they may desire. Comments that provide the factual basis supporting the views and suggestions presented are particularly helpful in developing reasoned regulatory decisions on the proposal. Comments are specifically invited on the overall regulatory, aeronautical, economic, environmental, and energy-related aspects of the proposal. Communications should identify both docket numbers and be submitted in triplicate to the address listed above. Commenters wishing the FAA to acknowledge receipt of their comments on this notice must submit with those comments a self-addressed, stamped postcard on which the following statement is made: ''Comments to Docket No. FAA–2002–14010/Airspace Docket No. 02–AAL–09.'' The postcard will be date/time stamped and returned to the commenter. All communications received on or before the specified closing date for comments will be considered before taking action on the proposed rule. The proposal contained in this notice may be changed in light of comments received. All comments submitted will be available for examination in the public docket both before and after the closing date for comments. A report summarizing each substantive public contact with FAA personnel concerned with this rulemaking will be filed in the docket.

Availability of NPRM's

An electronic copy of this document may be downloaded through the Internet at *http://dms.dot.gov.* Recently published rulemaking documents can also be accessed through the FAA's web page at *http://www.faa.gov* or the Superintendent of Document's web page at *http://www.access.gpo.gov/nara.*

Additionally, any person may obtain a copy of this notice by submitting a request to the Federal Aviation Administration, Office of Air Traffic Airspace Management, ATA–400, 800 Independence Avenue, SW., Washington, DC 20591, or by calling (202) 267–8783. Communications must identify both docket numbers for this notice. Persons interested in being placed on a mailing list for future NPRM's should call the FAA's Office of Rulemaking, (202) 267–9677, for a copy of Advisory Circular No. 11–2A, Notice of Proposed Rulemaking Distribution System, which describes the application procedure.

Background

In November 2002, the FAA was notified by NAV Canada that the continued operation of the Canadian Coast Guard's McInnes Island NDB was in jeopardy and that action was needed to reconfigure airways using the McInnes NDB.

The Proposal

The FAA is proposing to amend Title 14 Code of Federal Regulations (14 CFR) part 71 (part 71) that inpart revokes two VOR Federal Airways (V–307 and V362); and modifies VOR Federal Airway V–317, and Colored Federal Airway A–15, in Alaska. The FAA is proposing this action in preparation for the decommissioning of the McInnes Nondirectional Radio Beacon (NDB), Canada.

Colored Federal airways and Alaska VOR Federal airways are published in paragraphs 6009© and paragraph 6010(b), respectively, of FAA Order 7400.9K dated August 30, 2002, and effective September 16, 2002, which is incorporated by reference in 14 CFR Section 71.1. The colored Federal airway and Alaskan VOR Federal airways listed in this document would be published subsequently in the order.

The FAA has determined that this proposed regulation only involves an established body of technical regulations for which frequent and routine amendments are necessary to keep them operationally current. Therefore, this proposed regulation: (1) Is not a ''significant regulatory action'' under Executive Order 12866; (2) is not a ''significant rule'' under DOT Regulatory Policies and Procedures (44 FR 11034; February 26, 1979); and (3) does not warrant preparation of a regulatory evaluation as the anticipated impact is so minimal. Since this is a routine matter that will only affect air traffic procedures and air navigation, it is certified that this rule, when promulgated, will not have a significant economic impact on a substantial number of small entities under the criteria of the Regulatory Flexibility Act.

List of Subjects in 14 CFR Part 71

Airspace, Incorporation by reference, Navigation (air).

The Proposed Amendment

In consideration of the foregoing, the Federal Aviation Administration proposes to amend 14 CFR part 71 as follows:

PART 71—DESIGNATION OF CLASS A, CLASS B, CLASS C, CLASS D, AND CLASS E AIRSPACE AREAS; AIRWAYS; ROUTES; AND REPORTING POINTS

1. The authority citation for part 71 continues to read as follows:

Authority: 49 U.S.C. 106(g), 40103, 40113, 40120; E.O. 10854, 24 FR 9565, 3 CFR, 1959–1963 Comp., p. 389.

§ 71.1 [Amended]

2. The incorporation by reference in 14 CFR 71.1 of FAA Order 7400.9K, Airspace Designations and Reporting Points, dated August 30, 2002, and effective September 16, 2002, is amended as follows:

Paragraph 6010(b) Alaskan VOR Federal Airways

* * * * *

V–307 [Revoke]

* * * * *

V–362 [Revoke]

* * * * *

V–317 [Revised]

From Vancouver, BC, Canada via Comox, BC, Canada; Port Hardy, BC, Canada; Sandspit, BC, Canada; Annette Island, AK; Level Island, AK; Sisters Island, AK; to INT Sisters Island 272° and Yakutat, AK, 139° radials. The airspace within Canada is excluded.

* * * * *

Paragraph 6009(c)—Amber Federal Airways

* * * * *

A–15 [Revised]

From Port Hardy, BC, Canada, NDB, via Nichols, AK, NDB; Sumner Strait, AK, NDB; Coghlan Island, AK, NDB; Haines, AK, NDB; Burwash, YT, Canada, NDB; Nabesna, AK, NDB; to Delta Junction, AK, NDB. From Chena, AK, NDB via Chandalar Lake, AK, NDB; Put River, AK, NDB. The airspace within Canada is excluded.

* * * * *

Issued in Washington, DC, January 23, 2003.

Reginald C. Matthews,

Manager, Airspace and Rules Division.

[FR Doc. 03–2190 Filed 1–29–03; 8:45 am]

BILLING CODE 4910–13–P

DEPARTMENT OF TRANSPORTATION

Federal Highway Administration

23 CFR Part 973

[FHWA Docket No. FHWA–99–4968]

RIN 2125–AE53

Federal Lands Highway Program; Management Systems Pertaining to the Bureau of Indian Affairs and the Indian Reservation Roads Program

AGENCY: Federal Highway Administration (FHWA), DOT.

ACTION: Notice of public informational meetings.

SUMMARY: On January 8, 2003, at 68 FR 1105, the FHWA published a notice of proposed rulemaking (NPRM) proposing Management Systems Pertaining to the Bureau of Indian Affairs (BIA) and the Indian Reservation Roads (IRR) Program. The NPRM proposed rulemaking would require the BIA, in consultation with the Tribes, to develop and implement nationwide pavement, bridge, and safety management systems. In addition, the NPRM proposed to require the BIA and the FHWA to develop criteria to determine when congestion management systems are required for BIA or Tribal transportation facilities. The FHWA will hold a series of seven public meetings to provide more information to the public regarding this NPRM. These meetings will be used to provide an overview of the rulemaking process, particularly regarding how to submit comments, and to describe FHWA's purpose and intent in developing the proposed rules. Tribal representatives are encouraged to attend these meetings, and to submit suggestions and comments on the proposed rulemaking to the docket.

DATES: The meetings will be held on Thursday, February 6, 2003; two meeting sites for Tuesday, February 11, 2003; Thursday, February 13, 2003; two meeting sites for Wednesday, February 19, 2003; and one meeting on Thursday, February 20, 2003.

ADDRESSES: The February 6, 2003, meeting will take place at 9 a.m. at the Boardwalk Hotel, 3750 Las Vegas Boulevard South, Las Vegas, NV 89109 (this meeting will be held concurrently with a previously scheduled meeting of the Transportation Equity Act for the 21st Century Negotiated Rulemaking Committee); one of the February 11, 2003, meetings will take place at 1 p.m. in the Borealis Room of the Wedgewood Resort, 212 Wedgewood Drive, Fairbanks, AK 99701 (this is a change from the Anchorage, AK location listed in the January 8, 2003, NPRM); the other February 11, 2003, meeting will take place at 2 p.m. at the Indian Pueblo Cultural Center, 2401 12th St. N.W., (1 block north of I–40), Albuquerque, NM 87104; the February 13, 2003, meeting will take place at 9 a.m. at the U.S. Department of the Interior, Bureau of Indian Affairs, Federal Building Auditorium located at 911 N.E. 11th Avenue, Portland, OR 97232; one of the February 19, 2003, meetings will take place at 9 a.m. at the U.S. Department of the Interior, Bureau of Indian Affairs, Bishop Henry Whipple Federal Building, Room G110, One Federal Drive, Fort Snelling, MN 55111 (Minneapolis, MN area); the other February 19, 2003, meeting will take place at 9 a.m. at the U.S. Department of the Interior, Bureau of Indian Affairs, 711 Stewarts Ferry Pike, Nashville, TN 37214; the February 20, 2003, meeting will take place at 2 p.m. at the Oklahoma State University-Tulsa Campus in North Hall, Room 150, 700 N. Greenwood, Tulsa, OK 74016.

FOR FURTHER INFORMATION, CONTACT: Mr. Bob Bini, Federal Lands Highway, HFPD–2, (202) 366–6799, or Ms. Cynthia Hatley, Federal Lands Highway, HFPD–2, (202) 493–0426, FHWA, 400 Seventh St., SW., Washington, DC 20590.

SUPPLEMENTARY INFORMATION: Additional information is also available from the following Tribal Technical Assistance Program Centers for the specified meeting locations:

Las Vegas, NV—Mr. Evan Hong, NCAI TTAP, 626–350–4446; Fairbanks, AK—Mr. Jeff Harman, NW and Alaska TTAP, 800–399–6376; Albuquerque, NM—Mr. Ron Hall, CSU TTAP, 800–262–7623; Portland, OR—Mr. Dennis Frey, NW and Alaska TTAP, 888–944–5454; Fort Snelling, MN (Minneapolis, MN area)—Mr. Dennis Trusty, Northern Plains TTAP, 701–255–3285; Nashville, TN—Mr. Robert Gagnon, MTU TTAP, 906–487–3164; and Tulsa, OK—Mr. James Selfe, OSU—TTAP, 405–744–6049.

Electronic Access

An electronic copy of this document may be downloaded by using a computer, modem, and suitable communications software from the Government Printing Office's Electronic Bulletin Board Service at (202) 512–1661. Internet users may reach the Office of the Federal Register's Home page at: *http://www.archives.gov* and the Government Printing Office's Web site at: *http://www.access.gpo.gov.*

Authority: 23 U.S.C. 204, 315, 42 U.S.C. 7410 *et seq.*; 49 CFR 1.48.

Issued on: January 28, 2003.

Mary E. Peters,

Federal Highway Administrator.

[FR Doc. 03–2355 Filed 1–28–03; 5:01 pm]

BILLING CODE 4910–22–P

LIBRARY OF CONGRESS

Copyright Office

37 CFR Part 260

[Docket No. 2001–1 CARP DSTRA2]

Determination of Reasonable Rates and Terms for the Digital Performance of Sound Recordings by Preexisting Subscription Services

AGENCY: Copyright Office, Library of Congress.

ACTION: Notice of proposed rulemaking.

SUMMARY: The Copyright Office is requesting comment on proposed regulations that set rates and terms for the use of sound recordings by preexisting subscription services for the period January 1, 2002 through December 31, 2007.

DATES: Comments are due no later than March 3, 2003.

ADDRESSES: An original and five copies of any comment shall be delivered by hand to: Office of the General Counsel, Copyright Office, James Madison Building, Room LM–403, First and Independence Avenue, SE. Washington, DC; or mailed to: Copyright Arbitration Royalty Panel (CARP), P.O. Box 70977, Southwest Station, Washington, DC 20024–0977.

FOR FURTHER INFORMATION CONTACT: David O. Carson, General Counsel, or Tanya M. Sandros, Senior Attorney, Copyright Arbitration Royalty Panel, P.O. Box 70977, Southwest Station, Washington, DC 20024. Telephone: (202) 707–8380. Telefax: (202) 252–3423.

SUPPLEMENTARY INFORMATION:

Background

Section 106(6) of the Copyright Act, title 17 of the United States Code, gives a copyright owner of sound recordings an exclusive right to perform the copyrighted works publicly by means of a digital audio transmission. This right is limited by section 114(d), which allows certain non-interactive digital audio services to make digital transmissions of a sound recording under a compulsory license, provided that the services pay a reasonable royalty fee and comply with the terms of the license. Moreover, these services may make any necessary ephemeral

reproductions to facilitate the digital transmission of the sound recording under a second license set forth in section 112(e) of the Copyright Act.

The procedure for setting the rates and terms for these two statutory licenses is a two-step process. 17 U.S.C. 112(e)(3),(4) and (6) and 17 U.S.C. 114(f)(1). The first step requires the Librarian of Congress to initiate a voluntary negotiation period to give interested parties an opportunity to determine the applicable rates and terms through a less formal process. However, if the parties are unable to reach an agreement during this period, sections 112(e)(4) and 114(f)(1)(B) directs the Librarian of Congress to convene a three-person Copyright Arbitration Royalty Panel (''CARP'') for the purpose of determining the rates and terms for the compulsory license upon receipt of a petition filed in accordance with 17 U.S.C. 803(a)(1).

The first proceeding to set rates and terms for the section 114 license for preexisting subscription services began in 1995 and concluded with the issuance of a final rule and order by the Librarian of Congress on May 8, 1998. *See* 63 FR 25394 (May 8, 1998). The parties in that proceeding numbered four: the Recording Industry Association of America (''RIAA''); Digital Cable Radio Associates, now known as Music Choice; DMX Music, Inc. (''DMX''); and Muzak, L.P. (''Muzak'').

Later that same year, Congress passed the Digital Millennium Copyright Act (''DMCA''), amending the section 114 statutory license to cover additional transmission services and extending the term of the existing section 114 license rate as it applies to preexisting subscription services [1] through December 31, 2001. The DMCA also created a new statutory license to allow for the making of ephemeral reproductions for the purpose of facilitating certain digital audio transmissions, including those made by preexisting subscription services.

In accordance with the time frame set forth in the law for the purpose of setting rates and terms for use of the section 114 license by preexisting services, the Copyright Office published a notice in the **Federal Register** on January 9, 2001. 66 FR 1700 (January 9, 2001). This notice initiated a six-month negotiation period the purpose of which was to provide an opportunity for interested parties to set rates and terms for use of the section 114 license as it applied to both the preexisting subscription services and the preexisting satellite digital audio radio services. Unfortunately, no agreement was reached by the end of that period. Consequently, Music Choice and RIAA filed separate petitions with the Copyright Office, requesting that the Librarian of Congress convene a CARP to determine the rates and terms for both categories of preexisting services.

On November 13, 2001, the Copyright Office initiated the next phase of the rate adjustment proceeding with the publication of a notice in the **Federal Register** calling for Notices of Intent to Participate. 66 FR 58180 (November 13, 2001). Music Choice, DMX, Muzak, RIAA, the American Federation of Television and Radio Artists (''AFTRA''), the American Federation of Musicians of the United States and Canada (''AFM''), XM Satellite Radio, Inc., and Sirius Satellite Radio, Inc. filed the requisite notices with the Office, and the Office scheduled the 45-day precontroversy discovery period. Initially, it set the date for the filing of direct cases for December 2, 2002. Order in Docket No. 2001–1 CARP DSTRA2, dated September 12, 2002. However, at the request of the parties, the Office readjusted the schedule and set February 24, 2003, as the new date for the filing of direct cases. Order in Docket No. 2001–1 CARP DSTRA2, dated December 16, 2003. However, in light of a petition filed with the Copyright Office, a hearing may not be necessary to establish rates and terms for the use of sound recordings by the preexisting services.

Joint Petition for Adjustment of Rates and Terms Applicable to Preexisting Subscription Services

On January 17, 2003, RIAA, AFTRA, AFM, Music Choice, DMX Music, Inc. and Muzak, LLC (collectively, ''Petitioners'') filed a joint petition for adjustment of rates and terms for statutory licenses applicable to preexisting subscription services and a request for an immediate stay of the obligation to file direct cases on February 24, 2002.[2] Having reached agreement on the rates and terms for the use of sound recordings by preexisting services for the period January 1, 2002, through December 31, 2007, the petitioners request that the Office publish the proposed rates and terms for public comment in lieu of convening a CARP to determine the rates and terms for this period.

Pursuant to § 251.63(b) of title 37 of the Code of Federal Regulations, the Librarian can adopt the parties' proposed terms without convening a CARP, provided that the proposed terms are published in the **Federal Register** and no interested party with an intent to participate in the proceeding files a comment objecting to the proposed terms. In other words, unless there is an objection from a person with a significant interest in the proceeding who is prepared and eligible to participate in a CARP proceeding, the purpose of which is to adopt rates and terms for preexisting subscription services that use sound recordings to make digital audio transmissions pursuant to the section 112 and section 114 statutory licenses, the Librarian can adopt the rates and terms in the proposed settlement in final regulations without convening a CARP. This procedure to adopt negotiated rates and terms in the case where an agreement has been reached has been specifically endorsed by Congress.

> If an agreement as to rates and terms is reached and there is no controversy as to these matters, it would make no sense to subject the interested parties to the needless expense of an arbitration proceeding conducted under (section 114(f)(2) (1995)). Thus, it is the Committee's intention that in such a case, as under the Copyright Office's current regulations concerning rate adjustment proceedings, the Librarian of Congress should notify the public of the proposed agreement in a notice-and-comment proceeding and, if no opposing comment is received from a party with a substantial interest and an intent to participate in an arbitration proceeding, the Librarian of Congress should adopt the rates embodied in the agreement without convening an arbitration panel.

S. Rep. No. 104–128, at 29 (1995)(citations omitted).

Accordingly, the Copyright Office is granting the joint petition and is publishing for public comment the proposed rates and terms embodied in the January 17, 2003, joint petition. Any party who objects to the proposed rates and terms set forth herein must file a written objection with the Copyright Office and an accompanying Notice of Intent to Participate, if the party has not already done so. The content of the written challenge should describe the party's interest in the proceeding, the proposed rule the party finds objectionable, and the reasons for the challenge. If no comments are received, the regulations shall become final upon

[1] In the DMCA, Congress recognized two types of subscription services that were either in operation on or before July 31, 1998, or licensed by the Federal Communications Commission pursuant to a satellite digital audio radio service license on or before July 31, 1998. The former were designated as ''preexisting subscription services'' and the latter were termed a ''preexisting satellite digital audio radio service.'' See 17 U.S.C. 114(j)(10) and (11).

[2] The request for an immediate stay of the petitioners' obligation to file direct cases on February 24, 2002, will be addressed in a separate order.

publication of a final rule, and shall cover the period from January 1, 2002, to December 31, 2007.

List of Subjects in 37 CFR Part 260

Copyright, Digital Audio Transmissions, Performance Right, Sound Recordings.

Proposed Regulation

In consideration of the foregoing, the Copyright Office proposes amending part 260 of 37 CFR as follows:

PART 260—USE OF SOUND RECORDINGS IN A DIGITAL PERFORMANCE

1. The authority citation for part 260 continues to read as follows:

Authority: 17 U.S.C. 114, 801(b)(1)

2. The heading of Part 260 is revised as follows:

PART 260—RATES AND TERMS FOR PREEXISTING SUBSCRIPTION SERVICES' DIGITAL TRANSMISSIONS OF SOUND RECORDINGS AND THE MAKING OF EPHEMERAL PHONORECORDS

3. Section 260.1 is revised to read as follows:

§ 260.1 General

(a) This part 260 establishes rates and terms of royalty payments for the public performance of sound recordings by nonexempt preexisting subscription services in accordance with the provisions of 17 U.S.C. 114(d)(2), and the making of ephemeral phonorecords in connection with the public performance of sound recordings by nonexempt preexisting subscription services in accordance with the provisions of 17 U.S.C. 112(e).

(b) Upon compliance with 17 U.S.C. 114 and the terms and rates of this part, nonexempt preexisting subscription services may engage in the activities set forth in 17 U.S.C. 114(d)(2).

(c) Upon compliance with 17 U.S.C. 112(e) and the terms and rates of this part, nonexempt preexisting subscription services may engage in the activities set forth in 17 U.S.C. 112(e) without limit to the number of ephemeral phonorecords made.

(d) For purposes of this part, *Licensee* means any preexisting subscription service as defined in 17 U.S.C. 114(j)(11).

4. Section 260.2 is amended as follows:

a. By revising the section heading;

b. By revising paragraphs (a) and (b);

c. By redesignating paragraph (c) as paragraph (e), and adding a new paragraph (c);

d. By redesignating paragraph (d) as paragraph (f), and adding a new paragraph (d);

e. In redesignated paragraph (e)(1)(ii) by adding ''a'' before ''recognized advertising agency'';

f. In redesignated paragraphs (e)(1)(iii) and (vi), by removing ''Programming Service'' and adding ''programming service'' in its place; and

g. In redesignated paragraphs (e)(1)(viii) and (e)(2), by removing ''(c)'' and adding ''(e)'' in its place.

The additions and revisions to § 260.2 read as follows:

§ 260.2 Royalty fees for the digital performance of sound recordings and the making of ephemeral phonorecords by preexisting subscription services.

(a) Commencing January 1, 2002 and continuing through December 31, 2003, a Licensee's monthly royalty fee for the public performance of sound recordings pursuant to 17 U.S.C. 114(d)(2) and the making of any number of ephemeral phonorecords to facilitate such performances pursuant to 17 U.S.C. 112(e) shall be 7.0% of such Licensee's monthly gross revenues resulting from residential services in the United States.

(b) Commencing January 1, 2004 and continuing through December 31, 2007, a Licensee's monthly royalty fee for the public performance of sound recordings pursuant to 17 U.S.C. 114(d)(2) and the making of any number of ephemeral phonorecords to facilitate such performances pursuant to 17 U.S.C. 112(e) shall be 7.25% of such Licensee's monthly gross revenues resulting from residential services in the United States.

(c) Commencing in the year 2003 and continuing through the year 2007, each Licensee making digital performances of sound recordings pursuant to 17 U.S.C. 114(d)(2) and ephemeral phonorecords pursuant to 17 U.S.C. 112(e) shall make an advance payment of $100,000 per year, payable no later than January 20th of each year; Provided, however, that for 2003, the annual advance payment shall be due on [the 20th day following the month in which these rates and terms are published in the **Federal Register** notice as a final rule]. The annual advance payment shall be nonrefundable, but the royalties due and payable for a given year or any month therein under paragraphs (a) and (b) of this section shall be recoupable against the annual advance payment for such year; Provided, however, that any unused annual advance payment for a given year shall not carry over into a subsequent year.

(d) A Licensee shall pay a late fee of 1.5% per month, or the highest lawful rate, whichever is lower, for any payment received after the due date. Late fees shall accrue from the due date until payment is received.

* * * * *

5. Section 260.3 is amended as follows:

a. In paragraph (b), by removing ''twentieth'' and adding ''forty-fifth'' in its place;

b. By revising paragraphs (d) and (e); and

c. By adding a new paragraph (f).

The additions and revisions to § 260.3 read as follows:

§ 260.3 Terms for making payments of royalty fees.

* * * * *

(d) The designated agent may deduct from any of its receipts paid by Licensees under § 260.2, prior to the distribution of such receipts to any person or entity entitled thereto, the reasonable costs permitted to be deducted under 17 U.S.C. 114(g)(3); Provided, however, that the parties entitled to receive royalty payments according to the provisions set forth at 17 U.S.C. 114(g)(1) & (2) who have authorized a designated agent may agree to deduct such other costs agreed to by such other parties and the designated agent.

(e) Until such time as a new designation is made, SoundExchange, which initially is an unincorporated division of the Recording Industry Association of America, Inc., shall be the agent receiving royalty payments and statements of account and shall continue to be designated if it should be separately incorporated.

(f) A Licensee shall make any payments due under § 260.2(a) for digital transmissions or ephemeral phonorecords made between January 1, 2002, and [last day of the month in which these rates and terms are published in the **Federal Register** as a final rule] 2003, to the Designated Agent, less any amounts previously paid by such period to the Recording Industry Association of America, Inc., or SoundExchange by [the 45th day following the month in which these rates and terms are published in the **Federal Register** notice as a final rule].

6. Section 260.4 is amended as follows:

a. In paragraphs (a) and (b), by removing ''nonexempt subscription digital transmission service'' in each place it appears and adding ''nonexempt preexisting subscription service'' in its place; and

b. By revising paragraphs (d)(1) and (e).

The revisions to § 260.4 read as follows:

§ 260.4 Confidential information and statements of account.

* * * * *

(d)(1)Those employees, agents, consultants and independent contractors of the designated agent, subject to an appropriate confidentiality agreement, who are engaged in the collection and distribution of royalty payments hereunder and activities directly related hereto, who are not also employees or officers of a sound recording copyright owner or performing artist, and who, for the purpose of performing such duties during the ordinary course of employment, require access to the records; and

* * * * *

(e) The designated agent or any person identified in paragraph (d) of this section shall implement procedures to safeguard all confidential financial and business information, including, but not limited to royalty payments, submitted as part of the statements of account, using a reasonable standard of care, but no less than the same degree of security used to protect confidential financial and business information or similarly sensitive information belonging to the designated agent or such person.

* * * * *

§ 260.5 [Amended]

7. Section 260.5(b) is amended by removing ''nonexempt subscription digital transmission service'' and adding ''nonexempt preexisting subscription service'' in its place.

§ 260.6 [Amended]

8. Section 260.6(g) is amended by removing ''copyright owners''.

§ 260.7 [Amended]

9. Section 260.7 is amended by removing ''the cost of the administration of the collection and distribution of the royalty fees' and adding ''any costs deductible under 17 U.S.C. 114(g)(3)'' in its place.

Dated: January 24, 2003.

David O. Carson,

General Counsel.

[FR Doc. 03–2081 Filed 1–29–03; 8:45 am]

BILLING CODE 1410–33–P

DEPARTMENT OF COMMERCE

National Oceanic and Atmospheric Administration

50 CFR Part 216

[Docket No. 020603140–3010–02 , I.D. 050102G]

RIN 0648–AQ00

Regulations Governing the Taking and Importing of Marine Mammals; Eastern North Pacific Southern Resident Killer Whales

AGENCY: National Marine Fisheries Service (NMFS), National Oceanic and Atmospheric Administration (NOAA), Commerce.

ACTION: Proposed rule; request for comments.

SUMMARY: Following a review of the status of the eastern North Pacific Southern Resident stock of killer whales (*Orcinus orca*), NMFS has determined that the stock is below its Optimal Sustainable Population (OSP) and, therefore, proposes to designate the Southern Resident stock of killer whales as depleted under the Marine Mammal Protection Act (MMPA). NMFS requests that interested parties submit comments on this proposal and on potential conservation measures that may benefit these whales.

DATES: Information and comments must be received by March 31, 2003.

ADDRESSES: Information and comments should be submitted to Chief, Protected Resources Division, NMFS, 525 NE Oregon Street, Suite 500, Portland, OR 97232. Alternatively, comments may also be submitted via the Internet (*see* Electronic Access) or by facsimile (fax) to (503) 230–5435.

FOR FURTHER INFORMATION CONTACT: Mr. Garth Griffin, Northwest Regional Office, NMFS, Portland, OR (503) 231–2005, or Dr. Thomas Eagle, Office of Protected Resources, NMFS, Silver Spring, MD (301) 713–2322, ext. 105.

SUPPLEMENTARY INFORMATION:

Electronic Access

A list of the references used in this notice and other information related to the status of this stock of killer whales is available on the Internet at *http://www.nwr.noaa.gov/mmammals/whales/srkw.htm.* Comments may be submitted at the Internet address above or at the following: *http://www.nmfs.noaa.gov/ibrm.*

Background

Section 3(1)(A) of the MMPA (16 U.S.C. 1362(1)(A)) defines the term, ''depletion'' or ''depleted'', as any case in which ''the Secretary, after consultation with the Marine Mammal Commission and the Committee of Scientific Advisors on Marine Mammals ... determines that a species or population stock is below its optimum sustainable population [(OSP)].'' Section 3(9) of the MMPA defines OSP ''...with respect to any population stock, [as] the number of animals which will result in the maximum productivity of the population or the species, keeping in mind the carrying capacity [(K)] of the habitat and the health of the ecosystem of which they form a constituent element.'' NMFS' regulations at 50 CFR 216.3 clarify the definition of OSP as a population size which falls within a range from the population level of a given species or stock that is the largest supportable within the ecosystem (carrying capacity [K]) to the population level that results in the maximum net productivity level (MNPL). MNPL is the greatest net annual increment (increase) in population numbers resulting from additions due to reproduction less losses due to natural mortality.

A population stock below its MNPL is, by definition, below OSP and, thus, would be considered depleted under the MMPA. Historically, the estimated MNPL has been expressed as a range of values, generally 50 to 70 percent of K (42 FR 12010, March 1, 1977). In 1977, the midpoint of this range (60 percent of K) was used to determine whether dolphin stocks in the eastern tropical Pacific Ocean were depleted under the MMPA (42 FR 64548, December 27, 1977). The 60–percent-of-K value was used in the final rule governing the taking of marine mammals incidental to commercial tuna purse seine fishing in the eastern tropical Pacific Ocean (45 FR 72178, October 31, 1980) and has been used since that time for other status reviews under the MMPA. For stocks of marine mammals, including killer whales, K is generally unknown. NMFS, therefore, has used the best estimate available of maximum historical abundance as a proxy for K.

Pursuant to section 115 of the MMPA (16 U.S.C. 1383b), NMFS published an advance notice of proposed rulemaking (ANPR) (67 FR 44132, July 1, 2002) which included a request for scientific information. The notice requested information, comments, and supporting documents on stock status, areas of significance to the stock, and any factors that may be causing the decline or impeding the recovery of the stock. The 60–day comment period on the ANPR closed on August 30, 2002. A summary of the public comments received and

the agency's responses is presented below.

Comments and Responses

NMFS received 51 comments in response to the ANPR. The majority of the comments were form letters that did not provide substantive information, but voiced general support for the listing of Southern Resident killer whales under the Endangered Species Act. Summaries and responses are provided below only for those comments that address the ANPR or the status of Southern Resident killer whales under the MMPA.

Comment 1: Fourteen commenters disagreed with NMFS' intent to make a depleted designation for Southern Resident killer whales, indicating that there is no advantage to designating the population as depleted since it would only make extinction more likely.

Response: NMFS is concerned about the recent trends of the Southern Resident killer whale stock. The stock has exhibited considerable fluctuations in the 28 years it has been surveyed. More significantly, stock size has declined approximately 20 percent over the past six years (1996–2002). The best available scientific information indicates that the stock is below its OSP, and, accordingly, NMFS proposes to designate Southern Resident killer whales as depleted. Advantages of a depleted designation and protections under the MMPA are included in the response to comment 2.

Comment 2: Nineteen commenters were neutral toward NMFS' intent to designate the Southern Resident stock as depleted and stated that the MMPA provides only weak or ineffective protection for killer whales.

Response: NMFS disagrees with the assertion that the MMPA provides weak or ineffective conservation benefits to killer whales. The MMPA generally prohibits the taking of these marine mammals and generally requires the preparation of a conservation plan for depleted stocks as soon as possible. NMFS may generally prescribe such regulations as are necessary and appropriate to carry out the purposes of the MMPA. In addition, NMFS may develop conservation or management measures to alleviate impacts on marine mammal habitat that NMFS determines may be causing the decline or impeding the recovery of strategic stocks, the definition of which includes depleted stocks. Moreover, depleted stock designation under the MMPA is a useful tool to elevate public awareness of Southern Resident killer whale status and threats and to highlight conservation opportunities for Federal, state, tribal and local agencies.

Comment 3: Three commenters supported NMFS' intent to designate the Southern Resident stock of killer whales as depleted and agreed that the available information indicates that the stock is below OSP.

Response: The agency agrees with the comment.

Comment 4: One commenter supported a depleted designation, but provided information suggesting that the MNPL for killer whales is higher than the 60–percent-of-K stated in the ANPR. The commenter suggested that the MNPL for Southern Resident killer whales is near 80 percent of K.

Response: The agency has insufficient information to determine reliably if the MNPL for Southern Resident killer whales is as high as 80 percent of K. The current stock abundance is below the MNPL that can be estimated from the best available information and indicates that the stock is depleted.

Comment 5: One commenter stated that the lower bound of the estimated historical abundance for this stock (140) is conservative and that the actual historical population size was likely to have been much higher.

Response: The maximum historical abundance of Southern Resident killer whales likely exceeded 140 whales; however, there is insufficient information to estimate historical abundance directly. Based on the best available scientific evidence, from available census and whale-capture data, the estimate of 140 whales should be considered conservative, and, thus, it was used only to establish a lower bound of estimates for maximum historical abundance.

Comment 6: One commenter stated that an accurate determination of the historical population size is needed before the population could be considered recovered.

Response: Under the MMPA, NMFS must base its determinations on the best scientific information available. Consequently, the agency will use the best information available in establishing goals in planning for the recovery of Southern Resident killer whales. NMFS lacks sufficient information to support a direct estimate of historical abundance. However, NMFS has used the best indirect scientific information available to estimate historical abundance and will continue to update that information in making future determinations regarding this stock.

Comment 7: One commenter encouraged NMFS to develop a conservation plan for the Southern Resident stock as soon as possible.

Response: If the Southern Resident stock is designated as depleted the agency will immediately begin such planning. Section 115(b)(1) of the MMPA (16 U.S.C. 1383b(b)(1)) provides that a conservation plan shall be prepared as soon as possible unless NMFS determines that such a plan would not promote the recovery of the stock.

Determination of "Population Stock" or "Stock"

Section 3(11) of the MMPA defines a population stock or stock as a group of marine mammals of the same species or smaller taxa in a common spatial arrangement, that interbreed when mature. Although this definition is in part a legal concept, stocks, species, and populations are biological concepts that must be defined on the basis of the best scientific data available.

The killer whale is the largest member of the dolphin family (Delphinidae), and the species is distributed throughout the world's oceans. Along the west coast of North America, killer whales occur along the entire Alaskan coast, in British Columbia and Washington inland waterways, and along the outer coasts of Washington, Oregon, and California. North Pacific killer whales have been classified into three forms, termed Residents, Transients, and Offshore whales. All three of these forms are currently classified as the same biological species, O. orca. The three forms vary in morphology, ecology, behavior, group size, social organization, acoustic repertoire, and genetic characteristics. Behavioral evidence suggests that Offshore and Transient groups rarely interact with the Resident pods (pods are close-knit family groups ranging from 10 to 70 whales). Although the Transient form overlaps extensively in range with the Resident form, genetic evidence suggests that the two forms do not interbreed. Furthermore, distinct feeding habits exist, with Transient killer whales primarily preying on other marine mammals and Residents primarily feeding on fishes. Little is known about the feeding habits of the Offshore form.

Specific stock definitions for west coast killer whales are provided in the U.S. Pacific Marine Mammal Stock Assessments (Carretta et al. 2001) and include consideration of data on association patterns, acoustics, movements, genetic differences and potential fishery interactions. Five killer whale stocks are recognized within the Pacific U.S. exclusive economic zone: 1) the eastern North Pacific Northern Resident stock; 2) the eastern North

Pacific Southern Resident stock; 3) the eastern North Pacific Transient stock; 4) the eastern North Pacific Offshore stock; and 5) the Hawaiian stock. Eastern North Pacific Southern Residents occur in the inland waterways of southern British Columbia and Washington, including the Georgia Strait, the Strait of Juan de Fuca, and Puget Sound.

Southern Resident killer whales include members of 3 pods of killer whales (J, K, and L pods). These whales have been intensively studied, particularly by the Center for Whale Research, and all members of each pod have been identified. Ongoing research efforts include descriptions and photographs of new calves, and these animals are observed regularly as long as they remain in the population.

Determination as Depleted Under the MMPA

There are no empirical estimates of the historical stock size for Southern Resident killer whales; however, NMFS examined indirect evidence to derive an estimate of historical abundance for the population. A minimum historical abundance of 140 whales was derived by combining the total abundance based upon the original 1974 census population (71) with the estimated number of animals that were removed or died (68) during live capture operations for display conducted in the 1960's and early 1970's (67 FR 44132, 44133, July 1, 2002). The number of animals that may have been killed by shooting or other human interactions is unknown but, based on anecdotal evidence, may have been greater than zero. Additionally, a comparison of genetic diversity with the larger Northern Resident killer whale stock (214 whales) indicates that the Southern Resident stock may have been of similar size in the recent past (Barrett-Lennard, L.G. and Ellis, G.M. 2001 and NMFS 2002). Therefore, the best available scientific information suggests a historical abundance of approximately 140 to 200 whales.

The abundance of the Southern Resident stock has declined by approximately 20 percent over the past 6 years (1996–2002)(NMFS 2002). The true K and MNPL are unknown for Southern Resident killer whales. Using an estimated range of historical stock size of 140–200 whales as a proxy for K, the estimated MNPL for the Southern Resident stock would be 84–120 whales (i.e., 60 percent of 140–200). A more complete discussion of the estimated historical stock size can be found in the ANPR referenced above. The 2002 abundance of 80 Southern Resident killer whales (Center for Whale Research, 2002 Orca Survey) is below the lower bound of the estimated MNPL range (84) for the stock. The current population size meets the statutory definition of a depleted stock. NMFS recognizes that the current population size is very near the estimated lower bound of MNPL for this stock but is proposing this risk averse approach in light of the recent declining trend. Accordingly, NMFS has initiated consultation with the Marine Mammal Commission and has received initial support for the proposed action. Therefore, based on the best scientific information available, NMFS proposes to designate this stock as depleted under the MMPA.

Information Solicited

NMFS is soliciting comments on the proposed designation of this stock as depleted under the MMPA and is particularly interested in the historical abundance of the eastern North Pacific Southern Resident stock. The agency is also interested in: areas of ecological significance (mating, rearing, resting, feeding) to the eastern North Pacific Southern Resident stock; impacts that may be causing the decline or impeding the recovery of the stock; potential conservation measures that may be useful in alleviating those impacts and rebuilding the stock; and the potential economic impacts and the potential biological benefits of alternative conservation measures. It is requested that data, information, and comments be accompanied by: (1) supporting documentation such as maps, logbooks, bibliographic references, personal notes, or reprints of pertinent publications; and (2) the name of the person submitting the data, their address, and any association, institution, or business that the person represents.

Public Meetings

If Southern Resident killer whales are designated as depleted, NMFS will hold public meetings to define the scope and develop the content for a conservation plan. Dates, addresses, and times of the meetings would be announced in the preamble of the final rule.

References

A complete list of all cited references is available via the Internet (*see* Electronic Access) or upon request (*see* ADDRESSES).

Classification

This proposed rule has been determined to be not significant for the purposes of Executive Order 12866. Depletion designations under the MMPA are similar to ESA listing decisions, which are exempt from the requirement to prepare an environmental assessment or environmental impact statement under the National Environmental Policy Act. *See* NOAA Administrative Order 216–6.03(e)(1). Thus, NMFS has determined that the proposed depletion designation of this stock under the MMPA is exempt from the requirements of the National Environmental Policy Act of 1969, and an Environmental Assessment or Environmental Impact Statement is not required.

The Chief Counsel for Regulation of the Department of Commerce certified to the Chief Counsel for Advocacy of the Small Business Administration that this proposed rule, if adopted, would not have a significant economic impact on a substantial number of small entities as follows: ''The MMPA imposes a general moratorium on the taking of marine mammals. This proposed rule would designate the Eastern North Pacific Southern Resident stock of killer whales as depleted; however, this designation would not, by itself, place any additional restrictions on the public. Any subsequent restrictions placed on the public to protect these whales would be included in separate regulations, and appropriate analyses under the Regulatory Flexibility Act would be conducted during those rulemaking procedures.'' Hence, implementation of this proposed rule would not have a significant economic impact on a substantial number of small entities. As a result, no regulatory flexibility analysis for this rule has been prepared.

This proposed rule does not contain a collection-of-information requirement for purposes of the Paperwork Reduction Act of 1980. This rule does not contain policies with federalism implications sufficient to warrant preparation of a federalism assessment under Executive Order 13132.

List of Subjects in 50 CFR Part 216

Administrative practice and procedure, Exports, Imports, Marine mammals, Transportation.

Dated: January 22, 2003.

Rebecca Lent,

Deputy Assistant Administrator for Fisheries, National Marine Fisheries Service.

For the reasons set out in the preamble, 50 CFR part 216 is proposed to be amended as follows:

PART 216–REGULATIONS GOVERNING THE TAKING AND IMPORTING OF MARINE MAMMALS

1. The authority citation for part 216 continues to read as follows:

Authority: 16 U.S.C. 1361 *et seq.* unless otherwise noted.

2. In § 216.15, a new paragraph (h) is added to read as follows:

§ 216.15 Depleted species.

* * * * *

(h) Eastern North Pacific Southern Resident stock of killer whales (*Orcinus orca*). The stock includes all resident killer whales in pods J, K, and L in the waters of, but not limited to, the inland waterways of southern British Columbia and Washington, including the Georgia Strait, the Strait of Juan de Fuca, and Puget Sound.

[FR Doc. 03–2031 Filed 1–29–03; 8:45 am]

BILLING CODE 3510–22–S

Notices

Federal Register
Vol. 68, No. 20
Thursday, January 30, 2003

This section of the FEDERAL REGISTER contains documents other than rules or proposed rules that are applicable to the public. Notices of hearings and investigations, committee meetings, agency decisions and rulings, delegations of authority, filing of petitions and applications and agency statements of organization and functions are examples of documents appearing in this section.

DEPARTMENT OF AGRICULTURE

Food and Nutrition Service

Summer Food Service Program for Children Program Reimbursement for 2003

AGENCY: Food and Nutrition Service, USDA.

ACTION: Notice.

SUMMARY: This notice informs the public of the annual adjustments to the reimbursement rates for meals served in the Summer Food Service Program for Children (SFSP). These adjustments reflect changes in the Consumer Price Index and are required by the statute governing the Program. In addition, further adjustments are made to these rates to reflect the higher costs of providing meals in the States of Alaska and Hawaii, as authorized by the William F. Goodling Child Nutrition Reauthorization Act of 1998.

EFFECTIVE DATE: January 1, 2003.

FOR FURTHER INFORMATION CONTACT: Robert M. Eadie, Branch Chief, Policy and Program Development Branch, Child Nutrition Division, Food and Nutrition Service, U.S. Department of Agriculture, 3101 Park Center Drive, Room 640, Alexandria, Virginia 22302, (703) 305–2620.

SUPPLEMENTARY INFORMATION: This program is listed in the Catalog of Federal Domestic Assistance under No. 10.559 and is subject to the provisions of Executive Order 12372 which requires intergovernmental consultation with State and local officials (7 CFR part 3015, subpart V, and final rule related notice published at 48 FR 29114, June 24, 1983).

In accordance with the Paperwork Reduction Act of 1995 (44 U.S.C. 3501–3518), no new recordkeeping or reporting requirements have been included that are subject to approval from the Office of Management and Budget.

This notice is not a rule as defined by the Regulatory Flexibility Act (5 U.S.C. 601–612) and thus is exempt from the provisions of that Act. Additionally, this notice has been determined to be exempt from review by the Office of Management and Budget under Executive Order 12866.

Definitions

The terms used in this Notice shall have the meaning ascribed to them in the regulations governing the Summer Food Service Program for Children (7 CFR part 225).

Background

In accordance with section 13 of the National School Lunch Act (NSLA)(42 U.S.C. 1761) and the regulations governing the SFSP (7 CFR part 225), notice is hereby given of adjustments in Program payments for meals served to children participating in the SFSP in 2003. Adjustments are based on changes in the food away from home series of the Consumer Price Index (CPI) for All Urban Consumers for the period November 2001 through November 2002.

Section 104(a) of the William F. Goodling Child Nutrition Reauthorization Act of 1998 (Pub. L. 105–336) amended section 12(f) of the NSLA (42 U.S.C. 1760(f)) to allow adjustments to SFSP reimbursement rates to reflect the higher cost of providing meals in the SFSP in Alaska and Hawaii. Therefore, this notice contains adjusted rates for Alaska and Hawaii. This change was made in an effort to be consistent with other Child Nutrition Programs, such as the National School Lunch Program and the School Breakfast Program, which already had the authority to provide higher reimbursement rates for programs in Alaska and Hawaii.

The 2003 reimbursement rates, in dollars, for all States excluding Alaska and Hawaii:

MAXIMUM PER MEAL REIMBURSEMENT RATES FOR ALL STATES (NOT AK OR HI)

	Operating costs	Administrative costs	
		Rural or self-preparation sites	Other types of sites
Breakfast	$1.35	$.1350	$.1050
Lunch or Supper	2.35	.2475	.2050
Supplement	.55	.0675	.0525

The 2003 reimbursement rates, in dollars, for Alaska:

MAXIMUM PER MEAL REIMBURSEMENT RATES FOR ALASKA ONLY

	Operating costs	Administrative costs	
		Rural or self-preparation sites	Other types of sites
Breakfast	$2.19	$.2175	$.1725
Lunch or Supper	3.82	.4000	.3300

MAXIMUM PER MEAL REIMBURSEMENT RATES FOR ALASKA ONLY—Continued

	Operating costs	Administrative costs	
		Rural or self-preparation sites	Other types of sites
Supplement	.89	.1075	.0850

The 2003 reimbursement rates, in dollars, for Hawaii:

MAXIMUM PER MEAL REIMBURSEMENT RATES FOR HAWAII ONLY

	Operating Costs	Administrative costs	
		Rural or self-preparation sites	Other types of sites
Breakfast	$1.58	$.1575	$.1250
Lunch or Supper	2.75	.2875	.2400
Supplement	.64	.0775	.0625

The total amount of payments to State agencies for disbursement to Program sponsors will be based upon these Program reimbursement rates and the number of meals of each type served. The above reimbursement rates, for both operating and administrative reimbursement rates, represent a 2.28 percent increase during 2002 (from 175.8 in November 2001 to 179.8 in November 2002) in the food away from home series of the Consumer Price Index for All Urban Consumers, published by the Bureau of Labor Statistics of the Department of Labor. The Department would like to point out that the SFSP administrative reimbursement rates continue to be adjusted up or down to the nearest quarter-cent, as has previously been the case. Additionally, operating reimbursement rates have been rounded down to the nearest whole cent, as required by Section 11(a)(3)(B) of the NSLA (42 U.S.C. 1759 (a)(3)(B)).

Authority: Secs. 9, 13 and 14, National School Lunch Act, as amended (42 U.S.C. 1758, 1761, and 1762a).

Dated: January 24, 2003.

Roberto Salazar,

Administrator.

[FR Doc. 03–2113 Filed 1–29–03; 8:45 am]

BILLING CODE 3410–30–P

DEPARTMENT OF AGRICULTURE

Forest Service

Idaho Panhandle National Forests, Bonners Ferry Ranger District, Cancellation of Notice of Intent To Prepare an Environmental Impact Statement for the Bonners Ferry Ranger District Salvage Sales Project

AGENCY: Forest Service, USDA

ACTION: Cancellation notice.

SUMMARY: On May 31, 2000 a Notice of Intent (NOI) to prepare an environmental impact statement for the Bonners Ferry Ranger District Salvage Sales Project was published in the **Federal Register** (Volume 65, Number 105, pages 34654–34655). The proposal was to analyze the potential environmental effects of salvage harvesting up to 20,000 acres of dead and damaged trees in scattered areas located on the Bonners Ferry Ranger District, Idaho Panhandle National Forests. Since the publication of the Notice of Intent, public scoping and interdisciplinary team involvement have resulted in a project design that utilizes mitigation measures and restrictive design criteria that either eliminated or minimized potential impacts to resources that could result from the small salvage sales. Due to the redefined design and criteria of the project, the Interdisciplinary Team determined there will be no significant effects resulting from implementing the proposed action, therefore preparation of an environmental impact statement is not warranted.

ADDRESSES: Bonners Ferry Ranger District, 6286 Main St, Bonners Ferry, Idaho 83805–9764

FOR FURTHER INFORMATION CONTACT: Barry Wynsma, Project Team Leader, (208) 267–5561.

SUPPLEMENTARY INFORMATION: The public was first notified of this proposal and the intention to prepare an environmental impact statement in October 1999. The Bonners Ferry Ranger District of the Idaho Panhandle National Forests proposed salvage harvesting up to 20,000 acres of dead and damaged trees in scattered areas across the district. The small-scale salvage sales were expected to contribute to hazardous fuels reduction and to help restore productive stand conditions and/or ecological functioning in areas affected by windstorms, insects, disease and other damaging events. Salvage of the trees was expected to help provide forest products for local post and pole mills, small sawmills, and other forest product manufacturers.

Ensuring project design and development of action alternatives included incorporation of restrictive criteria such as avoiding resource areas of concern, old growth and riparian areas for instance, and mitigation measures such as timing salvage operations to take place during periods that minimized potential impacts to wildlife species of concern. The result of the project design for the proposed activities has led the project team to the conclusion that there will be no significant effects associated with the proposal, and therefore preparation of an environmental impact statement is not warranted. An environmental assessment will be prepared to document the proposed action, alternatives to the proposed action, and environmental consequences of implementing each of the alternatives.

Since an environmental assessment will be prepared instead of an environmental impact statement, the NOI is hereby rescinded.

Dated: January 24, 2003

Ranotta K. Mcnair,

Forest Supervisor.

[FR Doc. 03–2150 Filed 1–29–03; 8:45 am]

BILLING CODE 3410–11–M

DEPARTMENT OF AGRICULTURE

Forest Service

Notice of Resource Advisory Committee Meeting

AGENCY: Southwest Idaho Resource Advisory Committee, Boise, ID, Forest Service, USDA.

ACTION: Notice of meeting.

SUMMARY: Pursuant to the authorities in the Federal Advisory Committee Act (Public Law 92–463) and under the Secure Rural Schools and Community Self-Determination Act of 2000 (Public Law 103–393), the Boise and Payette National Forests' Southwest Idaho Resource Advisory Committee will conduct a business meeting. The meeting is open to the public.

DATES: Wednesday, February 19, 2003 beginning at 10:30 a.m.

ADDRESSES: Idaho Counties Risk Management Program Building, 3100 South Vista Avenue, Boise, Idaho.

SUPPLEMENTARY INFORMATION: Agenda topics will include review and approval of project proposals and an open public forum.

FOR FURTHER INFORMATION CONTACT: Randy Swick, Designated Federal Officer, at (208) 634–0400.

Dated: January 23, 2003.

Mark J. Madrid,

Forest Supervisor.

[FR Doc. 03–2157 Filed 1–29–03; 8:45 am]

BILLING CODE 3410–11–M

DEPARTMENT OF AGRICULTURE

Rural Utilities Service

Rural Broadband Access Loans and Loan Guarantees Program

AGENCY: Rural Utilities Service, USDA.

ACTION: Notice of application deadline.

SUMMARY: The Rural Utilities Service (RUS) announces funding available for the Rural Broadband Access Loan and Loan Guarantee program. For FY 2003, no less than $1.455 billion in loans is available, $1.295 billion for direct cost-of-money loans, $80 million for direct 4-percent loans, and $80 million for loan guarantees.

DATES: All returned applications from the Broadband Pilot Program must be delivered to RUS or bear postmark no later than March 3, 2003 in order to have a priority consideration in FY 2003. All applications must be delivered to RUS or bear postmark no later than January 31, 2003, to be considered for funding from their applicable state's allocation. All other applications must be delivered to RUS or bear postmark no later than July 31, 2003, to be considered for funding in Fiscal Year 2003.

FOR FURTHER INFORMATION CONTACT: Roberta D. Purcell, Assistant Administrator, Telecommunications Program, Rural Utilities Service, STOP 1590, 1400 Independence Avenue, SW., Washington, DC 20250–1590, Telephone (202) 720–9554, Facsimile (202) 720–0810.

SUPPLEMENTARY INFORMATION:

General Information

During FY 2003, no less than $1.455 billion will be made available for loans and loan guarantees for the construction, improvement, and acquisition of facilities and equipment for broadband service in eligible rural communities. Of the total loan funds available, $1.295 billion will be available for direct cost-of-money loans, $80 million for 4-percent direct loans, and $80 million for loan guarantees. The Rural Broadband Access Loan and Loan Guarantee Program is authorized by the Rural Electrification Act (7 U.S.C. 601) (the Act), as added by the Farm Security and Rural Investment Act of 2002, Pub. L. 101–171.

Priority will be given to applications previously received by RUS under its Broadband Pilot Program, described at 67 FR 45079.

Applications must be submitted in accordance with 7 CFR part 1738. This part and an application guide to assist in the preparation of applications are available in the Internet at: *http://www.usda.gov/rus/telecom*. Application guides may also be requested from RUS by contacting the appropriate agency contact:

Agency Contacts

For application information, contact the following individual: Deborah Jackson, Telecommunications Program, RUS/USDA, Room 2919, Stop 1541, 1400 Independence Avenue, SW., Washington, DC, (202) 720–8427.

Minimum and Maximum Loan Amounts

Loans and loan guarantees under this authority will not be made for less than $100,000. Maximum loan amounts apply only to the direct 4-percent loan program. The maximum amount available for any one applicant for a direct 4-percent loan is $5,000,000.

Minimum Rate of Data Transmission Criteria

The Secretary of Agriculture determines what qualifies as broadband service for the purpose of determining eligibility for financial assistance under the Rural Broadband Access Loan and Loan Guarantee Program. During fiscal year 2003 (and thereafter until further notice), to qualify as broadband service, the minimum rate-of-data transmission shall be 200 kilobits/second in the customer's connection to the network, both from the provider to the customer (downstream) and from the customer to the provider (upstream).

State Allocations

Due to the date of publication of the regulation and the regulatory deadline of January 31 for applications to be considered under the state allocation, applications submitted pursuant to this notice for fiscal year 2003 will be funded from the national reserve.

The Act requires RUS, from amounts made available each fiscal year, to establish a national reserve for loans and loan guarantees to eligible entities in states and to allocate amounts in the reserve to each state for each fiscal year. The Act further sets forth the method of allocation as follows:

''The amount of an allocation made to a State for a fiscal year * * * shall bear the same ratio to the amount of allocations made for all States for the fiscal year as the number of communities with a population of 2,500 inhabitants or less in the State bears to the number of communities with a population of 2,500 inhabitants or less in all States, as determined on the basis of the latest available census''.

The following table shows the number of communities with 2,500 inhabitants or less (from the 2000 U.S. Census data), the percent in each state of such communities in relation to the total of all states, and the dollar amount of loan and loan guarantee funds available to each state:

State	Number of communities w/2,500 or less	Percent of national total	Dollars allocated ($ mil)
Alabama	312	1.94	28,214,611
Alaska	225	1.40	20,347,075
Arizona	125	0.78	11,303,931
Arkansas	374	2.32	33,821,361
California	296	1.84	26,767,708
Colorado	212	1.32	19,171,467
Connecticut	40	0.25	3,617,258
Delaware	51	0.32	4,612,004
Florida	307	1.91	27,762,454
Georgia	380	2.36	34,363,950
Hawaii	67	0.42	6,058,907
Idaho	154	0.96	13,926,443
Illinois	856	5.32	77,409,318
Indiana	418	2.60	37,800,345
Iowa	826	5.13	74,696,375
Kansas	527	3.27	47,657,372
Kentucky	324	2.01	29,299,789
Louisiana	237	1.47	21,432,253
Maine	53	0.33	4,792,867
Maryland	148	0.92	13,383,854
Massachusetts	65	0.40	5,878,044
Michigan	355	2.21	32,103,163
Minnesota	659	4.09	59,594,323
Mississippi	228	1.42	20,618,370
Missouri	758	4.71	68,547,036
Montana	239	1.48	21,613,116
Nebraska	487	3.03	44,040,114
Nevada	27	0.17	2,441,649
New Hampshire	24	0.15	2,170,355
New Jersey	123	0.76	11,123,068
New Mexico	168	1.04	15,192,483
New York	528	3.28	47,747,804
North Carolina	428	2.66	38,704,659
North Dakota	356	2.21	32,193,595
Ohio	627	3.89	56,700,517
Oklahoma	565	3.51	51,093,767
Oregon	186	1.16	16,820,249
Pennsylvania	866	5.38	78,313,633
Rhode Island	5	0.03	452,157
South Carolina	221	1.37	19,985,350
South Dakota	321	1.99	29,028,494
Tennessee	228	1.42	20,618,370
Texas	960	5.96	86,814,189
Utah	185	1.15	16,729,818
Vermont	47	0.29	4,250,278
Virginia	207	1.29	18,719,309
Washington	276	1.71	24,959,079
West Virginia	219	1.36	19,804,487
Wisconsin	429	2.66	38,795,091
Wyoming	171	1.06	15,463,777
Puerto Rico	113	0.70	10,218,753
Guam	19	0.12	1,718,197
Am. Samoa	68	0.42	6,149,338
Commonwealth of Northern Mariana Islands	8	0.05	723,452
U.S. Virgin Islands	1	0.01	90,431
Total	6,099	100.00	1,455,855,856

4-Percent Direct Loans

An applicant will be eligible for a direct 4-percent loan if (1) the community being served has a population of less than 2,500, and is not currently receiving broadband service as defined at § 1738.11(b)(1), (2) the per capita income in the county being served as a percent of national per capita income, is not more than 55 percent of the national per capita income, as determined by the Bureau of Economic Analysis, U.S. Department of Commerce, at *http://www.bea.doc.gov/bea/regional/reis*, and (3) the population density, calculated as the total number of persons in the service area divided by the square miles of the service area is not more than 10 persons per square mile.

Applications Submitted Under the Broadband Pilot Program

Each application remaining unfunded from the Broadband Pilot Program will be returned to the applicant. The applicant will be given 30 days from the date of publication of final rule 7 CFR 1738, Rural Broadband Access Loans and Loan Guarantees, in the **Federal**

Register to resubmit a completed application.

Applications submitted within the 30-day time frame, that are economically and technically feasible, as determined by RUS and as set forth in RUS Bulletin 1738–1 will be given priority for funding as set forth in § 1738.14.

Dated: January 27, 2003.

Hilda Gay Legg,

Administrator, Rural Utilities Service.

[FR Doc. 03–2200 Filed 1–29–03; 8:45 am]

BILLING CODE 3410–15–P

COMMISSION ON CIVIL RIGHTS

Agenda and Notice of Public Meeting of the Arizona Advisory Committee

Notice is hereby given, pursuant to the provisions of the rules and regulations of the U.S. Commission on Civil Rights, that a meeting of the Arizona Advisory Committee to the Commission will convene at 9 a.m. and adjourn at 1 p.m. on Friday, March 7, 2003, at the Crowne Plaza Hotel (Metro Center), 2532 West Peoria, the Executive Board Room, Phoenix, Arizona 85029. The purpose of the meeting is to plan a follow-up to the 1997 report on civil rights problems along the United States/Mexico border. The report is: Federal Immigration Law Enforcement in the Southwest: Civil Rights Impacts on Border Communities. Four states will be involved.

Persons desiring additional information, or planning a presentation to the Committee, should contact Philip Montez, Director of the Western Regional Office, 213–894–3437 (TDD 213–894–3435). Hearing-impaired persons who will attend the meeting and require the services of a sign language interpreter should contact the Regional Office at least ten (10) working days before the scheduled date of the meeting.

The meeting will be conducted pursuant to the provisions of the rules and regulations of the Commission.

Dated at Washington, DC, January 24, 2003.

Ivy L. Davis,

Chief, Regional Programs Coordination Unit.

[FR Doc. 03–2186 Filed 1–29–03; 8:45 am]

BILLING CODE 6335–01–P

COMMISSION ON CIVIL RIGHTS

Agenda and Notice of Public Meeting of the Texas Advisory Committee

Notice is hereby given, pursuant to the provisions of the rules and regulations of the U.S. Commission on Civil Rights, that a meeting of the Texas Advisory Committee to the Commission will convene at 11 a.m. and adjourn at 3 p.m. on Friday, February 21, 2003, at the St. Anthony Hotel, Midland Room, 300 East Travis, San Antonio, TX 78205. The purpose of the meeting is to hold new member orientation and discuss civil rights issues in the State.

Persons desiring additional information, or planning a presentation to the Committee, should contact Philip Montez, Director of the Western Regional Office, 213–894–3437 (TDD 213–894–3435). Hearing-impaired persons who will attend the meeting and require the services of a sign language interpreter should contact the Regional Office at least ten (10) working days before the scheduled date of the meeting.

The meeting will be conducted pursuant to the provisions of the rules and regulations of the Commission.

Dated at Washington, DC, January 24, 2003.

Ivy L. Davis,

Chief, Regional Programs Coordination Unit.

[FR Doc. 03–2185 Filed 1–29–03; 8:45 am]

BILLING CODE 6335–01–P

DEPARTMENT OF COMMERCE

Census Bureau

National Survey of Volunteering and Giving Among Youths and Adults

ACTION: Proposed collection; comment request.

SUMMARY: The Department of Commerce, as part of its continuing effort to reduce paperwork and respondent burden, invites the general public and other Federal agencies to take this opportunity to comment on proposed or continuing information collections, as required by the Paperwork Reduction Act of 1995, Public Law 104–13 (44 U.S.C. 3506(c)(2)(A)).

DATES: Written comments must be submitted on or before March 31, 2003.

ADDRESSES: Direct all written comments to Diana Hynek, Departmental Paperwork Clearance Officer, Department of Commerce, Room 6625, 14th and Constitution Avenue, NW., Washington, DC 20230.

FOR FURTHER INFORMATION CONTACT: Requests for additional information or copies of the information collection instrument(s) and instructions should be directed to Ken Kaplan or Sue Montfort, U.S. Census Bureau, FOB 3, Room 3351, Washington, DC 20233–8400 at (301) 763–3836.

SUPPLEMENTARY INFORMATION:

I. Abstract

The purpose of this voluntary survey is to provide trend data on the volunteering and giving behavior of youths and adults; to chart the impact of major institutions, such as schools and religious institutions on encouraging such behavior; to highlight people's attitudes on a variety of issues relating to their volunteering behavior; and to explore behavioral and motivational factors that influence volunteering and giving.

Independent Sector, a nonprofit, nonpartisan coalition of more than 700 national organizations, foundations, and corporate philanthropy programs, began to study volunteerism in the United States in the early 1990s. Original survey content was developed by a national advisory group of scholars and practitioners and addressed the following issues:

- Who volunteers? Who gives? To whom? How much?
- What are determinants of giving and volunteering behavior?
- What is the motivation for giving and volunteering to various types of charitable causes?
- When do youths begin to volunteer and give?
- What skills have young people learned from their community service?
- To what degree do schools encourage volunteering? Do they offer courses requiring community service or require community service for graduation?
- What level of confidence do young people have in the institutions of our society?

This survey is unique because it contains information about both adults and youths who give or volunteer and those that do neither. The findings have been of interest to policymakers, the media, researchers, and school principals and teachers, as well as leaders of voluntary organizations.

As part of the emerging literature on ''social capital,'' or social attachments, one important correlation of interest is that of religious practice and volunteering. This survey seeks to confirm and understand better that correlation by asking questions such as attendance at religious services and whether a volunteer organization is religiously-affiliated. The Census Bureau considers the religiously-oriented questions appropriate in the context of the survey's objective. We will not ask respondents to identify any particular religion.

For the national sample, we will select a sample of households from

expired Current Population Survey rotations. We will obtain parental consent prior to interviewing the youths.

II. Method of Collection

The information will be collected by telephone-only interviews in one of the Census Bureau's telephone centers. The data methodology will utilize computer-assisted telephone interviewing (CATI).

III. Data

Office of Management and Budget (OMB) Number: Not available.

Form Number: There will be no form number because it will be conducted by CATI.

Type of Review: New collection.

Affected Public: Individuals or households.

Estimated Number of Respondents: 5,000 respondents.

Estimated Time Per Response: 30 minutes per response.

Estimated Total Annual Burden Hours: 2,500 hours.

Estimated Total Annual Cost: There is no cost to respondents other than their time.

Respondent's Obligation: Voluntary.

Legal Authority: Title 13, United States Code, section 182.

IV. Request for Comments

Comments are invited on: (a) Whether the proposed collection of information is necessary for the proper performance of the functions of the agency, including whether the information shall have practical utility; (b) the accuracy of the agency's estimate of the burden (including hours and cost) of the proposed collection of information; (c) ways to enhance the quality, utility, and clarity of the information to be collected; (d) ways to minimize the burden of the collection of information on respondents, including through the use of automated collection techniques or other forms of information technology and; (e) whether questions about religion, when contextually relevant and in a voluntary survey, are an appropriate area of inquiry to the Census Bureau.

Comments submitted in response to this notice will be summarized or included in the request for OMB approval of this information collection; they also will become a matter of public record.

Dated: January 24, 2003.

Madeleine Clayton,

Management Analyst, Office of the Chief Information Officer.

[FR Doc. 03–2090 Filed 1–29–03; 8:45 am]

BILLING CODE 3510–07–P

DEPARTMENT OF COMMERCE

Census Bureau

Submission for OMB Review; Comment Request

DOC has submitted to the Office of Management and Budget (OMB) for clearance the following proposal for collection of information under the provisions of the Paperwork Reduction Act (44 U.S.C. chapter 35).

Agency: U.S. Census Bureau.

Title: 2001 Panel of the Survey of Income and Program Participation, Wave 8 Topical Modules.

Form Number(s): SIPP–21805(L) Director's Letter; SIPP/CAPI Automated Instrument; SIPP–21003 Reminder Card.

Agency Approval Number: 0607–0875.

Type of Request: Revision of a currently approved collection.

Burden: 119,378 hours.

Number of Respondents: 78,750.

Avg Hours Per Response: Interview—30 minutes; reinterview—10 minutes.

Needs and Uses: The U.S. Census Bureau requests authorization from the Office of Management and Budget (OMB) to conduct the Wave 8 Topical Module interview for the 2001 Panel of the Survey of Income and Program Participation (SIPP). We also request approval for a few replacement questions in the reinterview instrument. The core SIPP instrument and reinterview instrument were cleared previously. The reinterview instrument will be used for quality control purposes.

The SIPP is designed as a continuing series of national panels of interviewed households that are introduced every few years, with each panel having durations of 3 to 4 years. The 2001 SIPP Panel is scheduled for three years and will include nine waves beginning February 1, 2001.

The survey is molded around a central ''core'' of labor force and income questions that remain fixed throughout the life of a panel. The core is supplemented with questions designed to answer specific needs. These supplemental questions are included with the core and are referred to as ''topical modules.'' The topical modules for the 2001 Panel Wave 8 are Child Support Agreements, Support for Nonhousehold Members, Functional Limitations and Disability for Adults and Children, Adult Well-Being, and Welfare Reform. Wave 8 interviews will be conducted from June through September 2003.

Data provided by the SIPP are being used by economic policymakers, the Congress, state and local governments, and Federal agencies that administer social welfare or transfer payment programs, such as the Department of Health and Human Services and the Department of Agriculture. The SIPP represents a source of information for a wide variety of topics and allows information for separate topics to be integrated to form a single and unified database so that the interaction between tax, transfer, and other government and private policies can be examined. Government domestic policy formulators depend heavily upon the SIPP information concerning the distribution of income received directly as money or indirectly as in-kind benefits and the effect of tax and transfer programs on this distribution. They also need improved and expanded data on the income and general economic and financial situation of the U.S. population. The SIPP has provided these kinds of data on a continuing basis since 1983, permitting levels of economic well-being and changes in these levels to be measured over time.

Affected Public: Individuals or households.

Frequency: Every 4 months.

Respondent's Obligation: Voluntary.

Legal Authority: Title 13 U.S.C., Section 182.

OMB Desk Officer: Susan Schechter, (202) 395–5103.

Copies of the above information collection proposal can be obtained by calling or writing Diana Hynek, Departmental Paperwork Clearance Officer, (202) 482–0266, Department of Commerce, room 6625, 14th and Constitution Avenue, NW., Washington, DC 20230 (or via the Internet at *mclayton@doc.gov*).

Written comments and recommendations for the proposed information collection should be sent within 30 days of publication of this notice to Susan Schechter, OMB Desk Officer either by fax (202–395–7245) or e-mail (*susan_schechter@omb.eop.gov*).

Dated: January 24, 2003.

Madeleine Clayton,

Management Analyst, Office of the Chief Information Officer.

[FR Doc. 03–2091 Filed 1–29–03; 8:45 am]

BILLING CODE 3510–07–U

DEPARTMENT OF COMMERCE

Foreign-Trade Zones Board

[Docket 4–2003]

Foreign-Trade Zone 2—New Orleans, LA Expansion of Manufacturing Authority—Subzone 2J Murphy Oil USA, Inc., Meraux, LA

An application has been submitted to the Foreign-Trade Zones Board (the Board) by the Port of New Orleans, grantee of FTZ 2, requesting authority on behalf of Murphy Oil USA, Inc. (Murphy), to expand the scope of manufacturing activity conducted under zone procedures within Subzone 2J at the Murphy oil refinery complex in Meraux, Louisiana. The application was submitted pursuant to the provisions of the Foreign-Trade Zones Act, as amended (19 U.S.C. 81a–81u), and the regulations of the Board (15 CFR part 400). It was formally filed on January 17, 2003.

Subzone 2J (620 acres, 250 employees) was approved by the Board in 1997 and is located at 2500 East St. Bernard Highway, Meraux, St. Bernard Parish, Louisiana. Authority was granted for the manufacture of fuel products and certain petrochemical feedstocks and refinery by-products (Board Order 895, (62 FR 32582, 6/16/97)).

The refinery (105,000 barrels per day) is used to produce fuels and petrochemical feedstocks. The expansion request involves several modified and upgraded processing units. Murphy has been expanding and modifying several units to allow for the processing of high-sulfur crude into low-sulfur gasoline and diesel fuels. The new facilities will increase the overall capacity of the refinery to 125,000 BPD. The feedstocks used and product slate will remain unchanged. Some 96 percent of the crude oil will be sourced from abroad.

Zone procedures would exempt the new refinery facilities from Customs duty payments on the foreign products used in its exports. On domestic sales, the company would be able to choose the Customs duty rates for certain petrochemical feedstocks (duty-free) by admitting foreign crude oil in non-privileged foreign status. The application indicates that the savings from zone procedures help improve the refinery's international competitiveness.

In accordance with the Board's regulations, a member of the FTZ staff has been appointed examiner to investigate the application and report to the Board.

Public comment is invited from interested parties. Submissions (original and 3 copies) shall be addressed to the Board's Executive Secretary at one of the following addresses:

1. Submissions Via Express/Package Delivery Services: Foreign-Trade-Zones Board, U.S. Department of Commerce, Franklin Court Building—Suite 4100W, 1099 14th St. NW., Washington, DC 20005; or

2. Submissions Via the U.S. Postal Service: Foreign-Trade-Zones Board, U.S. Department of Commerce, FCB—Suite 4100W, 1401 Constitution Ave. NW., Washington, DC 20230. The closing period for their receipt is March 31, 2003. Rebuttal comments in response to material submitted during the foregoing period may be submitted during the subsequent 15-day period (to April 15, 2003).

A copy of the application and accompanying exhibits will be available for public inspection at the Office of the Foreign-Trade Zones Board's Executive Secretary at the first address listed above, and at the U.S. Department of Commerce Export Assistance Center, 365 Canal Street, Suite 1170 New Orleans, LA 70130.

Dated: January 22, 2003.

Dennis Puccinelli,

Executive Secretary.

[FR Doc. 03–2106 Filed 1–29–03; 8:45 am]

BILLING CODE 3510–DS–P

DEPARTMENT OF COMMERCE

Foreign-Trade Zones Board

[A(32c)–12–02]

Notification of New Grantee Foreign-Trade Zone 138 Franklin County, OH

The Foreign-Trade Zones (FTZ) Board (the Board) has considered the documentation indicating that the Columbus Municipal Airport Authority (CMAA) was reorganized to include the Rickenbacker Port Authority (RPA). Upon review, we concur with the findings that the CMAA is the legal successor to RPA and we recognize the CMAA as grantee of FTZ 138 as of January 1, 2003.

Dated: January 22, 2003.

Dennis Puccinelli,

Executive Secretary.

[FR Doc. 03–2105 Filed 1–29–03; 8:45 am]

BILLING CODE 3510–DS–P

DEPARTMENT OF COMMERCE

International Trade Administration

[A–560–803]

Notice of Rescission of Antidumping Duty Administrative Review: Extruded Rubber Thread From Indonesia

AGENCY: Import Administration, International Trade Administration, Department of Commerce.

ACTION: Notice of rescission of antidumping duty administrative review.

SUMMARY: On June 25, 2002, the Department of Commerce (''the Department'') initiated an administrative review of the antidumping duty order on extruded rubber thread (''ERT'') from Indonesia, covering the period May 1, 2001, through April 30, 2002, and one manufacturer/exporter of the subject merchandise, P.T. Swasthi Parama Mulya (''Swasthi''). *See Initiation of Antidumping and Countervailing Duty Administrative Reviews and Requests for Revocation in Part,* 67 FR 42753 (June 25, 2002). This review has now been rescinded due to Swasthi's withdrawal of its request for an administrative review.

EFFECTIVE DATE: January 30, 2003.

FOR FURTHER INFORMATION CONTACT: Lyman Armstrong or Jim Neel, AD/CVD Enforcement, Office 6, Group II, Import Administration, International Trade Administration, U.S. Department of Commerce, 14th Street and Constitution Avenue, NW., Washington, DC 20230; telephone: (202) 482–3601 or (202) 482–4161, respectively.

SUPPLEMENTARY INFORMATION:

Case History

On May 31, 2002, the Department received a letter from Swasthi requesting an administrative review of the antidumping order on ERT from Indonesia. On June 25, 2002, the Department initiated an administrative review of this order for the period May 1, 2001, through April 30, 2002. *See Initiation of Antidumping and Countervailing Duty Administrative Reviews and Request for Revocation in Part,* 67 FR 42753 (June 25, 2002). On August 16, 2002, the Department sent the antidumping questionnaires to Swasthi. On August 29, 2002, Swasthi submitted a letter requesting to withdraw from the above referenced administrative review. *See* letter from Swasthi to the Department (August 29, 2002).

Scope of the Review

For purposes of this review, the product covered is ERT from Indonesia. ERT is defined as vulcanized rubber thread obtained by extrusion of stable or concentrated natural rubber latex of any cross sectional shape, measuring from 0.18 mm, which is 0.007 inches or 140 gauge, to 1.42 mm, which is 0.056 inch or 18 gauge, in diameter.

ERT is currently classified under subheading 4007.00.00 of the *Harmonized Tariff Schedule of the United States* (''*HTSUS*''). Although the *HTSUS* subheading is provided for convenience and customs purposes, the written description of the scope of this review is dispositive.

Rescission of Review

Within 90 days of the June 25, 2002 notice of initiation, Swasthi requested to withdraw its request for an administrative review. *See* Letter from Swasthi to the Department (August 29, 2002).

In accordance with the Department's regulations, and consistent with its practice, the Department hereby rescinds the administrative review of ERT from Indonesia for the period May 1, 2001, to April 30, 2002. *See* 19 CFR section 351.213(d)(1), which states in pertinent part: ''The Secretary will rescind an administrative review under this section, in whole or in part, if a party that requested a review withdraws the request within 90 days of the date of publication of notice of initiation of the requested review.''

This notice is in accordance with section 751(a)(1) of the Tariff Act of 1930 as amended and section 351.213(d) of the Department's regulations.

Dated: January 10, 2003.

Holly A. Kuga,

Acting Deputy Assistant Secretary for Import Administration.

[FR Doc. 03–2197 Filed 1–29–03; 8:45 am]

BILLING CODE 3510–DS–P

DEPARTMENT OF COMMERCE

International Trade Administration

[A-570–831]

Fresh Garlic from the People's Republic of China; Final Results of Antidumping Duty Administrative Review and Rescission of Administrative Review in Part

AGENCY: Import Administration, International Trade Administration, Department of Commerce.

ACTION: Notice of Final Results of Antidumping Duty Administrative Review and Rescission of Administrative Review in Part.

SUMMARY: On August 9, 2002, the Department of Commerce published the preliminary results of the administrative review of the antidumping duty order on fresh garlic from the People's Republic of China. The period of review is November 1, 2000, through October 31, 2001. The administrative review covers thirteen producers/exporters of subject merchandise.

We invited interested parties to comment on our preliminary results. Based on our analysis of the comments received, we have made no changes to our analysis of our intent to rescind the review with respect to one respondent company. We have determined that we should rescind the review of another respondent company instead of assigning that company a rate based on adverse facts available. For a discussion of the rescissions, see the section ''Partial Rescission of Review'' listed below. The final dumping margins for the administrative review are listed in the ''Final Results of the Review'' section below.

EFFECTIVE DATE: January 30, 2003.

FOR FURTHER INFORMATION CONTACT: Edythe Artman or Catherine Cartsos, Office of Antidumping/Countervailing Duty Enforcement 3, Import Administration, International Trade Administration, U.S. Department of Commerce, 14th Street and Constitution Avenue, N.W., Washington, DC 20230; telephone (202) 482–3931 or (202) 482–1757, respectively.

SUPPLEMENTARY INFORMATION:

Background

On August 9, 2002, the Department published the preliminary results of the administrative review of the antidumping duty order on fresh garlic from the People's Republic of China. *See Fresh Garlic from the People's Republic of China: Preliminary Results of Antidumping Duty Administrative Review, Partial Rescission of Administrative Review, and Intent to Rescind Administrative Review in Part*, 67 FR 51822 (August 9, 2002) (*Preliminary Results*). We invited parties to comment on our preliminary results. With respect to our intent to rescind the administrative review in part, we received comments from the petitioners and Clipper Manufacturing Ltd. (Clipper). With respect to the preliminary results of the administrative review, we received comments from the petitioners, the respondent Taian Fook Huat Tong Kee Foods Co., Ltd. (FHTK), and the respondent Golden Light Trading Company, Ltd. (Golden Light).

We have conducted these reviews in accordance with section 751 of the Tariff Act of 1930, as amended, and 19 CFR 351.213 (2001) .

Scope of the Order

The products covered by this antidumping duty order are all grades of garlic, whole or separated into constituent cloves, whether or not peeled, fresh, chilled, frozen, provisionally preserved, or packed in water or other neutral substance, but not prepared or preserved by the addition of other ingredients or heat processing. The differences between grades are based on color, size, sheathing, and level of decay.

The scope of this order does not include the following: (a) garlic that has been mechanically harvested and that is primarily, but not exclusively, destined for non-fresh use; or (b) garlic that has been specially prepared and cultivated prior to planting and then harvested and otherwise prepared for use as seed.

The subject merchandise is used principally as a food product and for seasoning. The subject garlic is currently classifiable under subheadings 0703.20.0010, 0703.20.0020, 0703.20.0090, 0710.80.7060, 0710.80.9750, 0711.90.6000, and 2005.90.9700 of the Harmonized Tariff Schedule of the United States (HTSUS). Although the HTSUS subheadings are provided for convenience and customs purposes, our written description of the scope of this order is dispositive. In order to be excluded from the antidumping duty order, garlic entered under the HTSUS subheadings listed above that is (1) mechanically harvested and primarily, but not exclusively, destined for non-fresh use or (2) specially prepared and cultivated prior to planting and then harvested and otherwise prepared for use as seed must be accompanied by declarations to the Customs Service to that effect.

Analysis of Comments Received

All issues raised in the case and rebuttal briefs by parties to the administrative review are addressed in the ''Issues and Decision Memorandum for the Administrative Review of Fresh Garlic from the People's Republic of China'' from Susan Kuhbach to Faryar Shirzad (January 21, 2003) (Decision Memo), which is hereby adopted by this notice. A list of the issues which parties raised and to which we responded in the Decision Memo is attached to this notice as an Appendix. The Decision Memo is a public document and is on file in the Central Records Unit (CRU), Main Commerce Building, Room B-099, and is accessible on the Web at

www.ia.ita.doc.gov. The paper copy and electronic version of the memorandum is identical in content.

Separate Rates

In our preliminary results, we presumed that Golden Light was a market-economy company and that, accordingly, it qualified for a company-specific rate. We determined that a separate-rate analysis was not warranted for FHTK because, as a wholly owned foreign subsidiary, its parent company was beyond the jurisdiction of the People's Republic of China (PRC). See *Preliminary Results*, 67 FR at 51823. We have not received any information since the issuance of the *Preliminary Results* that provides a basis for reconsideration of these determinations.

Use of Adverse Facts Available

In the Preliminary Results, we determined that Golden Light, Phil-Sino International Trading Inc. (Phil-Sino), and Wo Hing (H.K.) Trading Co. (Wo Hing) should be assigned the rate of 376.67 percent based on use of the adverse facts available. In addition, we determined that this rate should be used as the adverse facts available for the PRC-wide entity and, accordingly, we applied this rate to Foshan Foodstuffs Import & Export Company, Jinan Import & Export Corporation, Jinxiang Foreign Trade Corporation, Jinxiang Hong Chong Fruits & Vegetable Products Company, Ltd., Quingdao Rui Sheng Food Company, Ltd., Rizhao Hanxi Fisheries & Comprehensive Development Co., Ltd., Shandong Commercial Group Corporation, and Zhejiang Materials Industry International Co., Ltd. See *Preliminary Results*, 67 FR at 51825.

Because we are rescinding the review for Golden Light, we find that the use of adverse facts available for its margin is not warranted. See the section ''Partial Rescission of Review'' below for a discussion of our determination.

Changes Since the Preliminary Results

Based on our analysis of comments received, we have rescinded the review of Golden Light.

With respect to FHTK, we have based the surrogate value for garlic sprouts on data from the *Monthly Trade Statistics of Foreign Trade of India Volume II Imports*(Indian Import Statistics) that falls under the tariff category for onions, shallots, garlic, leeks, and other alliaceous vegetables, fresh or chilled. We have based the value for potassium fertilizer on Indian import data that falls under the tariff category for mineral or chemical fertilizers, potassic, and covers the entire period of review. We have updated the financial information for the three Indian mushroom producers upon which we based our calculation of the surrogate financial ratios. Finally, we have based the value for electricity on data from the 1999/2000 *Teri Energy Data Directory and Yearbook.*

We have not changed our analysis with respect to the rescission of Clipper from the review or with respect to the other respondents in the review.

Partial Rescission of Review

A. Clipper

Section 772(a) of the Act, states, in part:

The term ''export price'' means the price at which the subject merchandise is first sold (or agreed to be sold) before the date of importation by the producer or exporter of the subject merchandise outside of the United States to an unaffiliated purchaser in the United States or to an unaffiliated purchaser for exportation to the United States....

Accordingly, we have interpreted section 772(a) of the Act to mean that we are to use the price at which the first party in the chain of distribution who has knowledge of the U.S. destination of the merchandise sells the subject merchandise, either directly to a U.S. purchaser or to an intermediary such as a trading company. The party making such a sale, with knowledge of destination, is the appropriate party to be reviewed. Our focus is on the first party in the chain of distribution with knowledge of the U.S. destination, rather than on the first chronological sale of the merchandise. One exception to this rule is that, in non-market economy (NME) cases, we do not base export price on internal transactions between two companies located in the NME. See *Fresh Garlic from the People's Republic of China; Final Results of Antidumping Duty Administrative Review and Partial Termination of Administrative Review*, 62 FR 23758, 23759 (May 1, 1997).

Applying these principles, we have not reviewed Clipper's sales to its U.S. customer because the evidence on the record supports a finding that PRC export agents which sold the subject merchandise to Clipper had knowledge of the U.S. destination when they made the sales to Clipper. In addition, the sales of the garlic from the export agents to Clipper were the first non-intra-NME sales in the chain of distribution of the merchandise. Thus, these sales provide the appropriate basis on which to determine the export price.

The Department did not receive a request for review of the PRC export agents during the anniversary month of the publication of the antidumping duty order. See 19 CFR 351.213(b). Thus, it is not appropriate to conduct a review of the sales at issue. Therefore, we are rescinding this administrative review as it applies to Clipper. With this rescission, we will instruct the Customs Service to liquidate the entries during the period of review of subject merchandise from Clipper in accordance with 19 CFR 351.213(d).

B. Golden Light

For reasons discussed in response to comment 5 of the Decision Memo, we have determined that it is appropriate to rescind Golden Light from the review pursuant to 19 CFR 351.213(d)(3) on the basis that Golden Light had no entries, exports, or sales of subject merchandise during the POR.

Final Results of the Administrative Review

We determine that the following dumping margins exist for the period November 1, 2000, through October 31, 2001:

Exporter	Weighted-average percentage margin
Phil-Sino International Trading Inc.	376.67
Wo Hing (H.K.) Trading Co.	376.67
Taian Fook Huat Tong Kee Foods Co.	0.00

The Department shall determine, and the Customs Service shall assess, antidumping duties on all appropriate entries. The Department shall determine, and the Customs Service shall assess, antidumping duties on all appropriate entries. We will issue appropriate assessment instructions directly to the Customs Service within 15 days of publication of these final results of review.

Cash-Deposit Requirements

The following cash-deposit requirements will be effective upon publication of this notice of final results of administrative review for all shipments of the subject merchandise entered, or withdrawn from warehouse, for consumption on or after the publication date, as provided for by section 751(a)(2)(C) of the Act: (1) for merchandise exported by FHTK, the cash-deposit rate will be zero percent; (2) for Phil-Sino and Wo Hing, the cash-deposit rate will be 376.67 percent; (3) for all other PRC exporters which have not been found to be entitled to a separate rate, the cash-deposit rate will be the PRC-wide rate of 376.67 percent; and (4) for all other non-PRC exporters

of subject merchandise from the PRC, including Clipper and Golden Light, the cash-deposit rate will be the rate applicable to the PRC supplier of that exporter. These deposit requirements shall remain in effect until publication of the final results of the next administrative review.

This notice serves as a final reminder to importers of their responsibility under 19 CFR 351.402(f)(2) (2001) to file a certificate regarding the reimbursement of antidumping duties prior to liquidation of the relevant entries during these review periods. Pursuant to 19 CFR 351.402(f)(3), failure to comply with this requirement, could result in the Department's presumption that reimbursement of antidumping duties occurred and the subsequent assessment of doubled antidumping duties.

This notice also serves as a reminder to parties subject to administrative protective order (APO) of their responsibility concerning the disposition of proprietary information disclosed under APO in accordance with 19 CFR 351.305. Timely written notification of the return/destruction of APO materials or conversion to judicial protective order is hereby requested. Failure to comply with the regulations and the terms of an APO is a sanctionable violation.

We are issuing and publishing this determination and notice in accordance with sections 751(a)(1) and 777(i)(1) of the Act and 19 CFR 351.210(c) (2001).

Dated: January 21, 2003.

Faryar Shirzad,

Assistant Secretary for Import Administration.

Appendix

Decision Memo

1. Rescission of Review of Clipper
2. Rescission of Review of Golden Light
3. Bona Fides of FHTK's Sale
4. Use of Facts Available
5. Valuation of Garlic Seed
6. Valuation of Garlic Sprouts
7. Valuation of Urea
8. Valuation of Potassium Fertilizer
9. Calculation of Surrogate Financial Ratios
10. Valuation of Electricity
11. Valuation of Cartons

[FR Doc. 03–2100 Filed 1–29–03; 8:45 am]

BILLING CODE 3510–DS–S

DEPARTMENT OF COMMERCE

International Trade Administration

[A–570–863]

Honey From the People's Republic of China: Partial Rescission of Antidumping Duty New Shipper Review

AGENCY: Import Administration, International Trade Administration, Department of Commerce.

ACTION: Notice of partial rescission of the antidumping duty new shipper review of honey from the People's Republic of China.

SUMMARY: On August 6, 2002, the Department of Commerce published the initiation of the new shipper reviews of the antidumping duty order on honey from the People's Republic of China. The review covers Chengdu-Dujiangyan Dubao Bee Industrial Co., Ltd., and Wuhan Bee Healthy Co., Ltd. The period of review is December 1, 2001, through May 31, 2002. For the reasons discussed below, we are rescinding the review of Chengdu-Dujiangyan Dubao Bee Industrial Co., Ltd.[1]

EFFECTIVE DATE: January 30, 2003.

FOR FURTHER INFORMATION CONTACT: Angelica Mendoza or Donna Kinsella at (202) 482–3019 and (202) 482–0194, respectively; AD/CVD Enforcement, Office 8, Group III, Import Administration, International Trade Administration, U.S. Department of Commerce, 14th Street and Constitution Avenue, NW., Washington, DC 20230.

SUPPLEMENTARY INFORMATION:

The Applicable Statute and Regulations

Unless otherwise indicated, all citations to the Tariff Act of 1930, as amended (the Act), are references to the provisions effective January 1, 1995, the effective date of the amendments made to the Act by the Uruguay Round Agreements Act. In addition, unless otherwise indicated, all citations to the Department of Commerce's (the Department's) regulations are to 19 CFR part 351 (April 2002).

Scope of the Order

The products covered by this antidumping duty order are natural honey, artificial honey containing more than 50 percent natural honey by weight, preparations of natural honey containing more than 50 percent natural honey by weight, and flavored honey. The subject merchandise includes all grades and colors of honey whether in liquid, creamed, comb, cut comb, or chunk form, and whether packaged for retail or in bulk form. The merchandise subject to this order is currently classifiable under subheadings 0409.00.00, 1702.90.90, and 2106.90.99 of the Harmonized Tariff Schedule of the United States (HTSUS). Although the HTSUS subheadings are provided for convenience and U.S. Customs Service (U.S. Customs) purposes, the Department's written description of the merchandise under order is dispositive.

Background

On June 28, 2002, Chengdu-Dujiangyan Dubao Bee Industrial Co., Ltd. (Dubao), a producer and exporter of subject merchandise, submitted a request for a new shipper review. Dubao certified in its new shipper review request that (1) it did not export honey to the United States during the period of investigation (POI), (2) it has never been affiliated with any exporter or producer which did export honey during the POI, and (3) its export activities are not controlled by the central government of the People's Republic of China (PRC). Based on Dubao's certifications, the Department initiated a new shipper review of the antidumping duty order on honey from the PRC for ''Chengdu-Dujiangyan Dubao Bee Industrial Co., Ltd.'' for the time period December 1, 2001, through May 31, 2002. *See Honey from the People's Republic of China: Initiation of New Shipper Antidumping Duty Reviews,* 67 FR 50862 (August 6, 2002).

On November 21, 2002, Dubao informed the Department that its counsel incorrectly referred to Dubao as ''Chengdu-Dujiangyan Dubao Bee Industrial Co., Ltd.'' in its submissions to the Department. Dubao claims that the correct name of the company is ''Sichuan-Dujiangyan Dubao Bee Industrial Co., Ltd.'' We did not receive any comments from the American Honey Producers Association nor the Sioux Honey Association (collectively, petitioners) on this issue.

Rescission of Review

Dubao did not provide the Department with the correct certifications required under 351.214(b)(2) of the Department's regulations for a new shipper review. The Department's regulations at 19 CFR 351.214(b)(2) state that, if the company requesting the review is both the exporter and the producer of the subject merchandise, then the request from this company must contain a certification that the company did not export subject

[1] We are continuing the new shipper review of the antidumping duty order on honey from the People's Republic of China for Wuhan Bee Healthy Co., Ltd.

merchandise to the United States during the POI. In addition, those regulations require that the request for the new shipper review contain a certification that the exporter or producer has never been affiliated with any exporter or producer that exported subject merchandise to the United States during the POI. Moreover, those regulations further specify that, in an antidumping proceeding involving imports from a nonmarket economy country, the request for a new shipper review must also contain a certification that the export activities of the exporter or producer are not controlled by the central government.

As noted above, Dubao failed to identify the correct name of the exporter and producer of the subject merchandise for purposes of its required certifications. Therefore, we find it appropriate to rescind the new shipper review of Dubao based on its failure to provide the proper certifications pursuant to 19 CFR 351.214(b)(2).

Notification

Bonding is no longer permitted to fulfill security requirements for shipments from Dubao of honey from the PRC entered, or withdrawn from warehouse, for consumption in the United States on or after the publication of this rescission notice in the **Federal Register**.

This notice also serves as the only reminder to parties subject to administrative protective orders (APO) of their responsibility concerning the disposition of proprietary information disclosed under APO in accordance with 19 CFR 351.305(a)(3). Timely written notification of the return/destruction of APO material or conversion to judicial protective order is hereby requested. Failure to comply with the regulations and terms of an APO is a violation which is subject to sanctions.

We are issuing and publishing this determination and notice in accordance with sections 751(a)(2)(B)(iv) and 777(i) of the Tariff Act of 1930, as amended.

Dated: January 23, 2003.

Faryar Shirzad,

Assistant Secretary for Import Administration.

[FR Doc. 03–2104 Filed 1–29–03; 8:45 am]

BILLING CODE 3510–DS–P

DEPARTMENT OF COMMERCE

International Trade Administration

[A–570–863]

Honey From the People's Republic of China: Extension of Time Limit for Preliminary Results of New Shipper Antidumping Duty Review

AGENCY: Import Administration, International Trade Administration, Department of Commerce.

ACTION: Notice of extension of time limit for preliminary results of new shipper antidumping duty review.

EFFECTIVE DATE: January 30, 2003.

FOR FURTHER INFORMATION CONTACT: Angelica Mendoza or Donna Kinsella at (202) 482–3019 or (202) 482–0194, respectively; Antidumping and Countervailing Duty Enforcement Group III, Import Administration, International Trade Administration, U.S. Department of Commerce, 14th Street and Constitution Avenue, NW., Washington, DC 20230.

SUPPLEMENTARY INFORMATION:

The Applicable Statute

Unless otherwise indicated, all citations to the statute are references to the provisions effective January 1, 1995, the effective date of the amendments made to the Tariff Act of 1930, as amended (the Act). In addition, unless otherwise indicated, all citations to the Department's regulations are references to the provisions codified at 19 CFR part 351 (2002).

Background

The Department received a timely request from Wuhan Bee Healthy Co., Ltd. (Wuhan), in accordance with 19 CFR 351.214(c), for a new shipper review of the antidumping duty order on honey from the People's Republic of China (PRC), which has a December annual anniversary month and a June semiannual anniversary month. On July 31, 2002, the Department found that the request for review met all the regulatory requirements set forth in section 351.214(b) of the Department's regulations and initiated this new shipper antidumping review covering the period December 1, 2001, through May 31, 2002. *See* Honey from the People's Republic of China: Initiation of New Shipper Antidumping Reviews, 67 FR 50862 (August 6, 2002).[1] The preliminary results are currently due no later than January 27, 2003.

Extension of Time Limits for Preliminary Results

Pursuant to section 751(a)(2)(B) of the Act, the Department may extend the deadline for completion of the preliminary results of a new shipper review if it determines that the case is extraordinarily complicated. The Department has determined that this case is extraordinarily complicated, and the preliminary results of this new shipper review cannot be completed within the statutory time limit of 180 days. Specifically, a number of complex affiliation issues have been raised. The Department has issued supplemental questionnaires to collect additional information about these issues. In addition, we need more time to obtain additional information on sales and factors of production. Given the issues in this case, the Department finds that this case is extraordinarily complicated, and cannot be completed within the statutory time limit.

Accordingly, the Department is fully extending the time limit for the completion of the preliminary results by 300 days, to May 27, 2003, in accordance with section 751(a)(2)(B)(iv) of the Act and 351.214(i)(2) of the Department's regulations. The final results will in turn be due 90 days after the date of issuance of the preliminary results, unless extended.

Dated: January 23, 2003.

Joseph A. Spetrini,

Deputy Assistant Secretary for Import Administration, Group III.

[FR Doc. 03–2196 Filed 1–29–03; 8:45 am]

BILLING CODE 3510–DS–P

[1] On January 23, 2003, the Department rescinded Chengdu-Dujiangyan Dubao Bee Industrial Co., Ltd.'s request (initiated on July 31, 2002) for a new shipper review.

DEPARTMENT OF COMMERCE

International Trade Administration

[A–570–501]

Notice of Extension of Time Limit for Preliminary Results of Administrative Review: Natural Bristle Paint Brushes and Brush Heads From the People's Republic of China

AGENCY: Import Administration, International Trade Administration, U.S. Department of Commerce.

SUMMARY: The Department of Commerce is extending the time limit for the preliminary results of the administrative review of the antidumping duty order on natural bristle paint brushes and brush heads from the People's Republic of China until no later than February 28, 2003. The period of review is February 1, 2001, through January 31, 2002. This

extension is made pursuant to section 751(a)(3)(A) of the Tariff Act of 1930, as amended.

EFFECTIVE DATE: January 30, 2003.

FOR FURTHER INFORMATION CONTACT: Douglas Kirby or Sean Carey, AD/CVD Enforcement, Import Administration, International Trade Administration, U.S. Department of Commerce, 14th Street and Constitution Avenue, NW., Washington, DC 20230; telephone: (202) 482–3782 or (202) 482–3964, respectively.

SUPPLEMENTARY INFORMATION:

Statutory Time Limits

Section 351.213(h)(1) of the Department's regulations requires the Department to issue the preliminary results of an administrative review within 245 days after the last day of the anniversary month of the order or suspension agreement for which the administrative review was requested, and final results of review within 120 days after the date on which notice of the preliminary results was published in the **Federal Register**. However, if the Department determines that it is not practicable to complete the review within this time period, section 351.213(h)(2) of the regulations allows the Department to extend the 245-day period to 365 days and may extend the 120-day period to 180 days.

Background

On February 1, 2002, the Department published a notice of opportunity to request an administrative review of the antidumping duty order on natural bristle paint bushes and brush heads from the People's Republic of China (PRC) (67 FR 4945). On February 28, 2002, the Department received a timely request from the Paint Applicator Division of the American Brush Manufacturers Association, the petitioner, for administrative reviews of Hunan Provincial Native Produce and Animal By-Products Import and Export Corporation (Hunan) and Hebei Founder Import and Export Company (Hebei). On March 27, 2002, the Department initiated an administrative review of the antidumping duty order on natural bristle paintbrushes, for the period from February 1, 2001, through January 31, 2002, in order to determine whether merchandise imported into the United States is being sold at less than fair value with respect to these two companies. *See Initiation of Antidumping and Countervailing Duty Administrative Review and Requests for Revocations in Part,* 67 FR 14696 (March 27, 2002).

On May 1, 2002, the Department issued antidumping questionnaires to Hebei and Hunan. In its reply to Section A of the questionnaire, Hebei stated that it had made no sales or shipments of subject merchandise to the United States during the POR. The Department also performed a U.S. Customs Service (Customs) query for entries of natural bristle paintbrushes and brush heads from the PRC during the POR. We found no entries or shipments from Hebei during the POR. Thus, the Department rescinded the review with respect to Hebei. *See Natural Bristle Paintbrushes From the People's Republic of China; Notice of Rescission, In Part, of Antidumping Administrative Review,* 67 FR 58018 (September 13, 2002). On November 1, the Department extended the preliminary results of the review of Hunan by 84 days, until January 23, 2003 (67 FR 66614).

Pursuant to section 751(a)(3)(A) of the Act, the Department may extend the deadline for completion of the preliminary results of an administrative review if it determines that it is not practicable to complete the review within the time specified in section 351.213(h)(2) of the Department's regulations. The Department has determined that the preliminary results of this administrative review cannot be completed within the statutory time limit of 245 days. The Department finds that it is not practicable to complete the preliminary results of this administrative review because there are a number of issues that must be addressed, including analysis of recently submitted supplemental questionnaire responses. Therefore, in accordance with section 351.213(h)(2) of the Department's regulations, the Department is extending the time limit for the completion of preliminary results by an additional 36 days. The preliminary results will now be due no later than February 28, 2003. The final results continue to be done within 120 days of the preliminary results.

This notice is published pursuant to sections 751(a)(3)(A) and 777(i)(1) of the Act.

Dated: January 23, 2003.

Joseph A. Spetrini,

Deputy Assistant Secretary for Import Administration, Group III.

[FR Doc. 03–2101 Filed 1–29–03; 8:45 am]

BILLING CODE 3510–DS–M

DEPARTMENT OF COMMERCE

International Trade Administration

[A-570–855]

Non-Frozen Apple Juice Concentrate from the People's Republic of China: Initiation of Antidumping New Shipper Review

AGENCY: Import Administration, International Trade Administration, Department of Commerce.

ACTION: Notice of Initiation of Antidumping New Shipper Review

SUMMARY: The Department of Commerce has received a request to conduct a new shipper review of the antidumping duty order on non-frozen apple juice concentrate from the People's Republic of China. In accordance with section 751(a)(2)(B) of the Tariff Act of 1930, as amended, and 19 CFR 351.214, we are initiating this new shipper review.

EFFECTIVE DATE: January 30, 2003.

FOR FURTHER INFORMATION CONTACT: Craig Matney, Audrey Twyman or Stephen Cho, Import Administration, International Trade Administration, U.S. Department of Commerce, 14th Street and Constitution Avenue, NW, Washington, DC 20230; telephone (202) 482–1778, (202) 482–3534, and (202) 482–3798 respectively.

SUPPLEMENTARY INFORMATION:

Background

On December 17, 2002, the Department of Commerce (''the Department'') received a request from Yantai Golden Tide Fruits & Vegetable Food Co., Ltd. (''Golden Tide''), pursuant to section 751(a)(2)(B) of the Tariff Act of 1930, as amended (''the Act''), and in accordance with 19 CFR 351.214(b), to conduct a new shipper review of the antidumping duty order on non-frozen apple juice concentrate (''NFAJC'') from the People's Republic of China (''PRC''). Golden Tide identified itself as a producer and exporter of non-frozen apple juice concentrate from the PRC. This order has a June anniversary month.

Initiation of Review

Pursuant to 19 CFR 351.214(b), Golden Tide certified in its request that it did not export the subject merchandise to the United States during the period of investigation (''POI'') (October 1, 1998 through March 31, 1999), that it has never been affiliated with any exporter or producer who exported the subject merchandise to the United States during the POI, and that its export activities are not controlled by

the central government of the PRC. Golden Tide submitted documentation establishing: (i) the date on which its NFAJC was first shipped to the USA; (ii) the volume of that shipment and subsequent shipments; and (iii) the date of the first sale to an unaffiliated customer in the United States.

In accordance with section 751(a)(2)(B) of the Act and 19 CFR 351.214, we are initiating a new shipper review of the antidumping duty order on NFAJC from the PRC. We intend to issue the preliminary results of this review not later than 180 days from the date of publication of this notice. We intend to issue final results of this review no later than 90 days after the date on which the preliminary results were issued. See 19 CFR 351.214(i). All provisions of 19 CFR 351.214 will apply to Golden Tide throughout the duration of this new shipper review. Pursuant to 19 CFR 351.214(g)(1)(i)(B), the standard period of review in a new shipper review initiated in the month immediately following the semiannual anniversary month will be the six-month period immediately preceding the semi-annual anniversary month.

Antidumping Duty Proceeding	Period to be Reviewed
People's Republic of China: Non-Frozen Apple Juice Concentrate, A-570–855: Yantai Golden Tide Fruits & Vegetable Food Co., Ltd.	06/01/02 through 11/30/02

Concurrent with publication of this notice, and in accordance with 19 CFR 351.214(e), we will instruct the U.S. Customs Service to allow, at the option of the importer, the posting of a bond or security in lieu of a cash deposit for each entry of the subject merchandise exported by the company listed above, until the completion of the review. As Golden Tide has certified that it both produced and exported the subject merchandise exported to the United States during the relevant period of review, we will apply the bonding option under 19 CFR 351.107(b)(1)(i) only to subject merchandise for which it is both the producer and exporter.

Interested parties must submit applications for disclosure under administrative protective orders in accordance with 19 CFR 351.305 and 351.306.

This initiation notice is in accordance with section 751(a)(2)(B)(ii) of the Act (19 U.S.C. 1675(a)) and 19 CFR 351.214 and 351.221(c)(1)(i).

Dated: January 24, 2003.

Susan Kuhbach,

Acting Deputy Assistant Secretary for Import Administration.

[FR Doc. 03–2195 Filed 1–29–03; 8:45 am]

BILLING CODE 3510–DS–S

DEPARTMENT OF COMMERCE

International Trade Administration

[A-570–879, A-580–850]

Postponement of Preliminary Determinations of Antidumping Duty Investigations: Polyvinyl Alcohol from the People's Republic of China and the Republic of Korea

AGENCY: Import Administration, International Trade Administration, Department of Commerce.

SUMMARY: SUMMARY: The Department of Commerce is postponing the preliminary determinations in the antidumping duty investigations of polyvinyl alcohol from the People's Republic of China and the Republic of Korea from February 12, 2003, until no later than March 14, 2003. These postponements are made pursuant to section 733(c)(1)(A) of the Tariff Act of 1930, as amended.

EFFECTIVE DATE: January 30, 2003.

FOR FURTHER INFORMATION CONTACT: Elizabeth Eastwood (People's Republic of China) or Irina Itkin (Republic of Korea) at (202) 482–3874 or (202) 482–0656, respectively, Import Administration, International Trade Administration, U.S. Department of Commerce, 14th Street and Constitution Avenue, NW., Washington, DC 20230.

SUPPLEMENTARY INFORMATION:

Postponement of Due Date for Preliminary Determination

On October 1, 2002, the Department initiated antidumping duty investigations of imports of polyvinyl alcohol from the People's Republic of China (PRC) and the Republic of Korea (Korea). *See* 67 FR 61591 (Oct. 1, 2002). The notice of initiation stated that we would issue our preliminary determinations no later than 140 days after the date of initiation. *See Id.* Currently, the preliminary determinations in this investigation are due on February 12, 2003.

On January 21, 2003, the petitioners made a timely request pursuant to 19 CFR 351.205(e) for a 30-day postponement for the PRC and Korea, pursuant to section 733(c)(1)(A) of the Tariff Act of 1930, as amended (the Act). The petitioners stated that a postponement of these preliminary determinations is necessary in order to permit more complete and effective investigations and more accurate preliminary determinations.

Under section 733(c)(1)(A) of the Act, if the petitioner makes a timely request for an extension of the period within which the preliminary determination must be made under subsection (b)(1), then the Department may postpone making the preliminary determination under subsection (b)(1) until not later than the 190th day after the date on which the administering authority initiated the investigation. Therefore, in accordance with the petitioners' requests for postponement, the Department is postponing the preliminary determinations in these investigations until March 14, 2003, which is 170 days from the date on which the Department initiated these investigations.

This notice is issued and published pursuant to section 733(c)(2) of the Act and 19 CFR 351.205(f).

Dated: January 23, 2003.

Faryar Shirzad,

Assistant Secretary for Import Administration.

[FR Doc. 03–2102 Filed 1–29–03; 8:45 am]

BILLING CODE 3510–DS–S

DEPARTMENT OF COMMERCE

International Trade Administration

[A-583–816]

Notice of Amended Final Results of Antidumping Duty Administrative Review: Stainless Steel Butt-Weld Pipe Fittings from Taiwan

AGENCY: Import Administration, International Trade Administration, Department of Commerce.

EFFECTIVE DATE: January 30, 2003.

FOR FURTHER INFORMATION CONTACT: Lilit Astvatsatrian, AD/CVD Enforcement Group III, Office IX, Import Administration, International Trade Administration, U.S. Department of Commerce, 14th Street and Constitution Avenue, NW., Washington, DC 20230; telephone: (202) 482–6412.

SUPPLEMENTARY INFORMATION:

Scope of the Review

The merchandise subject to this administrative review is certain stainless steel butt-weld pipe fittings (''SSBWPF'') whether finished or unfinished, under 14 inches inside diameter. Certain SSBWPF are used to connect pipe sections in piping systems where conditions require welded connections. The subject merchandise is used where one or more of the following conditions is a factor in designing the piping system: (1) Corrosion of the piping system will occur if material other than stainless steel is used; (2) contamination of the material in the system by the system itself must be prevented; (3) high temperatures are present; (4) extreme low temperatures are present; and (5) high pressures are contained within the system.

Pipe fittings come in a variety of shapes, with the following five shapes the most basic: ''elbows'', ''tees'', ''reducers'', ''stub-ends'', and ''caps.'' The edges of finished pipe fittings are beveled. Threaded, grooved, and bolted fittings are excluded from this review. The pipe fittings subject to this review are classifiable under subheading 7307.23.00 of the Harmonized Tariff Schedule of the United States (''HTSUS'').

Although the HTSUS subheading is provided for convenience and customs purposes, our written description of the scope of the review is dispositive. Pipe fittings manufactured to American Society of Testing and Materials specification A774 are included in the scope of this order.

On April 12, 2001, during this administrative review, the Department received a scope ruling request, in accordance with 19 CFR 351.225(c), from Allegheny Bradford Corporation d/b/a Top Line Process Equipment Company (≥Top Line≥), for a scope ruling on whether the stainless steel butt-weld tube fittings it plans to import are covered by the antidumping duty order on stainless steel butt-weld pipe fittings from Taiwan. On November 15, 2001, the Department issued its preliminary scope ruling. *See Memorandum from Edward C. Yang, Director, Enforcement, Group III, Office 9, to Joseph A. Spetrini, Deputy Assistant Secretary for Import Administration, Group III: Preliminary Scope Ruling on the Antidumping Duty Order on Stainless Steel Butt-Weld Pipe Fittings: Allegheny Bradford Corporation d/b/a Top Line Process Equipment* (''*Preliminary Scope Ruling*''), dated November 15, 2001, which is on file at the U.S. Department of Commerce, in the Central Records Unit, in room B-099. We gave interested parties an opportunity to comment on our *Preliminary Scope Ruling*. Top Line and petitioners filed briefs on November 21, 2001. On November 26, 2001, Top Line and petitioners filed rebuttal briefs. On December 10, 2001, the Department issued its final scope ruling that Top Line's stainless steel butt-weld tube fittings are within the scope of the Order. *See Memorandum from Edward C. Yang, Director, Enforcement, Group III, Office 9, to Joseph A. Spetrini, Deputy Assistant Secretary for Import Administration, Group III: Final Scope Ruling on the Antidumping Duty Order on Stainless Steel Butt-Weld Pipe Fittings: Allegheny Bradford Corporation d/b/a Top Line Process Equipment*, dated December 10, 2001, which is also on file at the U.S. Department of Commerce, in the Central Records Unit, in room B-099.

Amendment of the Final Results

On December 17, 2002, the Department of Commerce (''the Department'') issued its final results for stainless steel butt-weld pipe fittings from Taiwan for the June 1, 2000 through May 31, 2001, period of review. *See Notice of Final Results and Final Rescission in Part of Antidumping Duty Administrative Review: Stainless Steel Sheet and Strip in Coils From France: Stainless Steel Butt-Weld Pipe Fittings From Taiwan (''Final Results'')*, 67 FR 78417 (December 24, 2002).

In accordance with 19 C.F.R. §:351.224(c), on December 20, 2002, the petitioners in this administrative review requested that the Department extend the deadline to file ministerial errors regarding the *Final Results* from December 20, 2002 to December 27, 2002. On December 20, 2002, the Department extended the deadline to file any ministerial error allegations on the Final Results from December 20, 2002 to December 27, 2002. Subsequently, on December 27, 2002, the petitioners timely filed an allegation pursuant to 19 CFR §351.224(c) that the Department made six ministerial errors in the FINAL RESULTS. Ta Chen Stainless Steel Pipe Co., (''Ta Chen''), the only respondent covered by the review, did not submit any ministerial error allegations or rebuttal comments in reply to petitioners' ministerial error allegations.

Allegation 1: Improper Revision to General and Administrative Expense (''G&A'') Ratio

The petitioners state that in the final results the Department erred in the method of applying the revised general and administrative expenses (''G&A'') to the total cost of manufacture when adding certain bonus payments to the reported G&A. According to the petitioners, the Department erroneously applied the revised G&A ratio to the reported G&A, instead of applying the revised G&A to the reported total cost of manufacture. The petitioners note that the same error of not applying the revised G&A to the total cost of manufacture was also made in the Margin Calculation Program.

Department's Position: We agree with the petitioners and have revised both the Model Match and Margin Calculation programs to apply the revised G&A correctly. See Analysis Memo.

Allegation 2: Improper Use of Fiscal Year for U.S. Indirect Selling Expense Calculation

The petitioners argue that in the final results the Department erroneously did not rely on 2001 financial statements of Ta Chen International (''TCI'') for the calculation of the U.S. indirect selling expense. The petitioners further argue that the Department has erred in its decision by finding that TCI had not been given the opportunity to adjust its 2001 financial data because record evidence shows that the relevant adjusted information was in fact on the record. Thus, the petitioners state that the Department should revise its final results by using TCI's adjusted 2001 indirect selling expense percentage of the gross unit price.

Department's Position: With regard to this allegation, we disagree that a change to the calculation would represent a ministerial error correction. At the outset, we note that petitioners are correct that this information is on the record. However, we note that reliance on that erroneous observation is only one of the two bases of our decision in the final results. The second basis of the Department's decision was that TCI's year 2000 data overlaps a longer portion of the POR than the year 2001 data. This fact is unchallenged by the petitioners. Therefore, petitioners' request that the Department overturn its decision to use the year 2000 TCI data is not ministerial in nature, but rather involves a methodological change. A ministerial error is defined under 19 CFR 351.224(f) as ''an error in addition, subtraction, or other arithmetic function, clerical error resulting from inaccurate copying, duplication, or the like, and any other similar type of unintentional error which the Secretary considers ministerial.'' Accordingly, we have not made the requested change.

Allegation 3: Improper Use of Short-term Borrowing Rate for U.S. Credit Expense Calculation

The petitioners argue that in the final results, the Department incorrectly based the U.S. credit expenses for certain ''indent'' sales on Ta Chen Taiwan's short-term borrowing rate, instead of its U.S. subsidiary TCI's short-term borrowing rate. The petitioners conclude the Department should revise U.S. credit expenses based TCI's short-term interest rate as opposed to that of Ta Chen.

Department's Position: We agree with the petitioners that the Department inadvertently used Ta Chen's short-term borrowing rate for calculation of imputed credit expense for the U.S. sales at issue, instead of correctly using TCI's short-term borrowing rate. We have corrected this error. See Analysis Memo.

Allegation 4: Improper Application of Average Margin to Unreported Sales

Petitioners note that in the preliminary results, the Department decided to impose partial facts available on two sets of Ta Chen's U.S. sales and assigned Ta Chen's average positive margin to those sales. The petitioners further note that in the final results, the Department changed from using the average positive margin to the average margin on the basis that use of the average positive margin was implicitly an unintended adverse margin. However, petitioners argue that using the average margin produces an incorrect result. *See, Memorandum For The File from Lilit Astvatsatrian through James Doyle*, dated January 20, 2003, for identification of the precise nature of the alleged incorrect result. Moreover, petitioners assert that the average positive margin is not adverse as the highest dumping margin calculated would have been the proper adverse facts available margin. As a result of these considerations, petitioners conclude that the Department should apply the average positive margin to the two sets of Ta Chen's U.S. sales at issue.

Department's Position: We disagree with petitioners' assertion that the use of the average margin represents a ministerial error and accordingly will not adjust the final results. The final results computer program correctly calculated and applied the average margin to these sales, which was precisely the Department's intent as expressed in the final results. While the petitioners may disagree with the use of the calculated average margin, such disagreement regarding the figure does not represent identification of a ministerial error as described in 19 CFR 351.224(f).

Allegation 5: Omission of Negative Data Test in the Model Match Program

The petitioners maintain that in its Margin Calculation Program, the Department conducted a ''negative data test'' to find and remove a negative reported price or quantity from the calculation. Petitioners also note that the Department did not conduct a similar negative data test in the Model Match Program. Petitioners conclude that conducting the test in one program and not the other results in the incorrect use of different databases between the two programs.

Department's Position: We disagree with petitioners. As an initial matter, we note that petitioners did not comment on this standard Department calculation practice after the preliminary results, which was the correct time to raise this methodological consideration. Finally, as this is a methodological issue, it cannot be understood to be a ministerial error.

Allegation 6: Improper Admission of CEP Offset

Petitioners allege that the Department, in granting Ta Chen a CEP offset, failed: (1) to analyze the proper levels of trade for determining whether a CEP offset should be granted, and (2) to confirm the type and extent of the selling expenses offered by Ta Chen to the U.S. and home markets in the submitted record. Petitioners argue that after a proper analysis, the Department should find that the U.S. level of trade is at a higher level (or at a minimum, an equal level) of trade than home market sales and deny Ta Chen's request for a CEP offset and then correct the final results accordingly.

Department's Position: We disagree with the petitioners. Rather than requesting the Department to correct an unintentional error such as these listed at 19 CFR 351.224 (f), the petitioners are requesting the Department to review its analysis and subsequently reverse its decision at the final results. Accordingly, we cannot agree this represents a ministerial error.

We are amending the *Final Results* to reflect the correction of the above-cited two ministerial errors. All changes made to the model match and margin program can be found in the analysis memorandum. *See Memorandum to the File from Lilit Astvatsatrian, Case Analyst to James C. Doyle, Program Manager, Final Analysis for Ta Chen Stainless Steel Pipe Co. for the Amended Final Results of the Administrative Review of Stainless Steel Butt-Weld Pipe Fittings from Taiwan for the period June 1, 2000 through May 31, 2001*, dated January 20, 2003.

The revised weighted-average dumping margin is as follows:

Producer/Manufacturer/Exporter	Final Weighted-Average Margin (percent)	Amended Final Weighted Average Margin (percent)
Ta Chen	2.38	2.41

The Department will determine, and the Customs Service shall assess, antidumping duties on all appropriate entries. In accordance with 19 CFR 351.212(b), we have calculated importer-specific assessment rates. With respect to the constructed export price sales, we divided the total dumping margins for the reviewed sales by the total entered value of those reviewed sales for each importer. We will direct Customs to assess any resulting *non-de minimis* percentage margins against the entered Customs values for the subject merchandise on each of that importer's entries during the review period. We will issue appropriate assessment instructions directly to the Customs Service within 15 days of publication of these amended final results of review.

We will also direct the Customs Service to collect cash deposits of estimated antidumping duties on all appropriate entries in accordance with the procedures discussed in the Final Results and at the rates amended by this determination. The amended deposit requirements are effective for all shipments of the subject merchandise entered, or withdrawn from warehouse, for consumption on or after the date of publication of this notice and shall remain until publication of the final results of the next administrative review.

We are issuing and publishing this determination and notice in accordance with sections 751(a)(1) and 777(i) of the Act and CFR 351.210(c).

Dated: January 23, 2002.

Faryar Shirzad,

Assistant Secretary for Import Administration.

[FR Doc. 03–2103 Filed 1–29–03; 8:45 am]

BILLING CODE 3510–DS–S

DEPARTMENT OF DEFENSE

Office of the Secretary

Proposed Collection; Comment Requested

AGENCY: Office of the Under Secretary of Defense (Personnel and Readiness).

ACTION: Notice.

In compliance with section 3506(c)(2)(A) of the Paperwork Reduction Act of 1995, the Office of the Under Secretary of Defense (Personnel and Readiness) announces the following proposed reinstatement of a public information collection and seeks public comment on the provisions thereof. Comments are invited on: (a) Whether the proposed collection of information is necessary for the proper performance of the functions of the agency, including whether the information shall have practical utility; (b) the accuracy of the agency's estimate of burden of the proposed information collection; (c) ways to enhance the quality, utility, and clarity of the information to be collected; and (d) ways to minimize the burden of the information collection on respondents, including through the use of automated collection techniques or other forms of information technology.

DATES: Consideration will be given to all comments received march 31, 2003.

ADDRESSES: Written comments and recommendations on the proposed information collection should be sent to the Office of the Under Secretary of Defense (Personnel and Readiness) (Program Integration) Legal Policy, ATTN: Lt Col Patrick Lindemann, 4000 Defense Pentagon, Washington, DC 20301–4000.

FOR FURTHER INFORMATION CONTACT: To request more information on this proposed information collection or to obtain a copy of the proposal and associated collection instruments, please write to the above address or call at (703) 697–3387.

Title, Associated Form, and OMB Control Number: Application for Correction of Military Record Under the Provisions of Title 10, U.S. Code, Section 1552, DD Form 149, OMB Control Number 0704–0003.

Needs and Uses: This information collection requirement is necessary for all Service personnel (current and former servicemembers) to apply to their respective Boards for Correction of Military Records (BCMR) for a correction of their military records under Title 10, United States Code Section 1552. The BCMRs of the Services are the highest administration boards and appellate review authorities in the Services for the resolution of military personnel disputes. The Service Secretaries, acting through the BCMRs, are empowered with broad powers and are duty bound to correct records if an error or injustice exists. The range of issues includes, but is not limited to, awards, clemency petitions (of courts-martial sentences), disabilities, evaluation reports, home of record, memoranda of reprimands, promotions, retirements, separations, survivor benefit plans, and titling decisions by law enforcement authorities.

Information collection is needed to provide current and former servicemembers with a method through which to request correction of a military record, and to provide the Services with the basic data needed to process the request.

Affected Public: Individuals or households.

Annual Burden Hours: 14,000.

Number of Respondents: 28,000.

Responses Per Respondent: 1.

Average Burden Per Response: 30 minutes.

Frequency: On Occasion.

SUPPLEMENTARY INFORMATION:

Summary of Information Collection

The respondents for this information collection are current and former servicemembers requesting correction to their military records. The servicemember submits to the respective Board for Correction of Military Records (BCMR) a DD Form 149, ''application for Correction of Military Record Under the provisions of Title 10, U.S. Code Section 1552.'' The information from the DD Form 149 is used by the respective Service Boards for Correction of Military Records in processing the applicant's request authorized under Title 10 U.S.C. 1552. The DD Form 149 was devised to standardize applications to the BCMRs. This information is used to identify and secure the appropriate official military and medical records from the appropriate records storage facilities. Information on the form is used by the BCMRs to identify the issues and arguments raised by applicants, identify any counsel representing applicants, and determine if the applicants filed their petitions within the three-year statute of limitations established by Congress.

Dated: January 22, 2003.

Patricia L. Toppings,

Alternate OSD Federal Register Liaison Officer, Department of Defense.

[FR Doc. 03–2160 Filed 1–29–03; 8:45 am]

BILLING CODE 5001–08–M

DEPARTMENT OF DEFENSE

Office of the Secretary

Submission for OMB Review; Comment Request

ACTION: Notice.

The Department of Defense will submit to OMB for emergency processing, the following proposal for collection of information under the provisions of the Paperwork Reduction Act (44 U.S.C. Chapter 35).

DATES: Consideration will be given to all comments received by February 10, 2003.

Title, Applicable Form, and OMB Number: Application for Department of Defense Impact Aid for Children with Severe Disabilities; SD Form 816 and SD Form 816C; OMB Number 0704—[To be Determined].

Type of Request: New Collection; Emergency processing requested with a shortened public comment period of ten days. An approval date by February 28, 2003, has been requested.

Number of Respondents: 50.

Responses Per Respondent: 1.

Annual Responses: 50.

Average Burden Per Response: 8 hours.

Annual Burden Hours: 400.

Needs and Uses: Department of Defense funds are authorized for local educational agencies (LEAs) that educate military dependent students with severe disabilities and meet certain criteria. Eligible LEAs are determined by their responses to the U.S. Department of Education (ED) from information they submitted on children with disabilities, when they completed the Impact Program form for the Department of Education. This new application will be requested of LEAs who educate military dependent students with disabilities, who have been deemed eligible for the U.S. Department of Education Impact Aid program, to determine if they meet the criteria to receive additional funds from the Department of Defense due to high special education costs of the military dependents with severe disabilities that they serve.

Affected Public: State, Local or Tribal Government.

Frequency: On occasion.

Respondent's Obligation: Required to obtain or retain benefits.

OMB Desk Officer: Ms. Jacqueline A. Zeiher.

Written comments and recommendations on the proposed information collection should be sent to Ms. Zeiher at the Office of Management and Budget, Desk Officer for DoD, Room 10236, New Executive Office Building, Washington, DC 20503.

DOD Clearance Officer: Mr. Robert Cushing.

Written requests for copies of the information collection proposal should be sent to Ms. Cushing, WHS/DIOR, 1215 Jefferson Davis Highway, Suite 1204, Arlington, VA 22202–4302, or by fax at (703) 604–1514.

Dated: January 24, 2003.

Patricia L. Toppings,

Alternate OSD Federal Register Liaison Officer, Department of Defense.

[FR Doc. 03–2282 Filed 1–29–03; 8:45 am]

BILLING CODE 5001–08–M

DEPARTMENT OF DEFENSE

Department of the Air Force

Community College of the Air Force

AGENCY: Department of the Air Force, DoD.

ACTION: Notice of meeting.

SUMMARY: The Community College of the Air Force (CCAF) Board of Visitors will hold a meeting to review and discuss academic policies and issues relative to the operation of the college. Agenda items include a review of the operations of the CCAF and an update on the activities of the CCAF Policy Council. Members of the public who wish to make oral or written statements at the meeting should contact Second Lieutenant Richard W. Randolph, Designated Federal Officer for the Board, at the address below no later than 4 p.m. on 8 April 2003. Please mail or electronically mail all requests. Telephone requests will not be honored. The request should identify the name of the individual who will make the presentation and an outline of the issues to be addressed. At least 35 copies of the presentation materials must be given to Second Lieutenant Randolph no later than three days prior to the time of the board meeting for distribution. Visual aids must be submitted to Second Lieutenant Richard Randolph on a 3½″ computer disk in Microsoft PowerPoint format no later than 4 p.m. on 8 April 2003 to allow sufficient time for virus scanning and formatting of the slides.

DATES: April 15, 2003, 8 a.m.

ADDRESSES: Community College of the Air Force, First floor Conference room, 130 West Maxwell Boulevard, Maxwell Air Force Base, AL 36112.

FOR FURTHER INFORMATION CONTACT: Second Lieutenant Richard W. Randolph, (334) 953–7322, Community College of the Air Force, 130 West Maxwell Boulevard, Maxwell Air Force Base, AL 36112–6613, or through electronic mail at *richard.randolph@maxwell.af.mil.*

Pamela D. Fitzgerald,

Air Force Federal Register Liaison Officer.

[FR Doc. 03–2179 Filed 1–29–03; 8:45 am]

BILLING CODE 5001–05–M

DEPARTMENT OF EDUCATION

Intent To Compromise Claim Against Community Unit School District 300, Carpentersville, IL

AGENCY: Department of Education.

ACTION: Notice of intent to compromise a claim with request for comments.

SUMMARY: The United States Department of Education (Department) intends to compromise a claim against Community Unit School District 300, Carpentersville, Illinois (CUSD 300) now pending before the Office of Administrative Law Judges (OALJ), Docket No. 02–91–R. Before compromising a claim, the Department must publish its intent to do so in the **Federal Register** and provide the public an opportunity to comment on that action (20 U.S.C. 1234a(j)).

DATES: We must receive your comments on the proposed action on or before March 17, 2003.

ADDRESSES: Address all comments concerning the proposed action to Ronald B. Petracca, Esq., Office of the General Counsel, U.S. Department of Education, 400 Maryland Avenue, SW., room 6C111, Washington, DC 20202–2110.

FOR FURTHER INFORMATION CONTACT: Ronald B. Petracca, *Esq.* Telephone (202) 401–8316. If you use a telecommunications device for the deaf (TDD), you may call the Federal Information Relay Service (FIRS) at 1–800–877–8339.

Individuals with disabilities may obtain this document in alternative format (*e.g.*, Braille, large print, audio tape, or computer diskette) on request to the contact person listed under **FOR FURTHER INFORMATION CONTACT.**

SUPPLEMENTARY INFORMATION:

Invitation to Comment

We invite you to submit comments regarding this proposed action. During and after the comment period, you may inspect all public comments in room 6c111, FB–6, 400 Maryland Avenue, SW., Washington, DC, between the hours of 8:30 a.m. and 4 p.m., Eastern time, Monday through Friday of each week except Federal holidays.

Assistance to Individuals With Disabilities in Reviewing Comments

On request, we will supply an appropriate aid, such as a reader or print magnifier, to an individual with a disability who needs assistance to review the comments. If you want to schedule an appointment for this type of aid, please contact the person listed under **FOR FURTHER INFORMATION CONTACT.**

Background

The claim in question arose when the Director of the Department's Post Audit Group, Financial Improvement and Post Audit Operations, Office of the Chief Financial Officer, issued a program determination letter (PDL) on September 20, 2002. The PDL demanded a refund of $684,299 of funds awarded by the Department to CUSD 300 under the Systemwide Improvement Grant Program, which was authorized by sections 7115 and 7116 of the Elementary and Secondary Education Act of 1965, as amended by Improving America's Schools Act of 1994, 20 U.S.C. 7425–7426 (2000). The purpose of this program is to support the efforts of school districts to serve Limited English proficient students. The grant in question had a funding period that began on August 1, 1997 and ended on July 31, 1999. The Director determined that the funds disallowed had been used for improper or unsupported expenditures for personnel, fringe benefits, travel, supplies, training, and other items. In addition, the Director disallowed indirect costs charged to the grant that were related to these unallowable direct expenditures. Finally, the Director disallowed grant funds draw down by CUSD 300 that exceeded the amount of funds CUSD 300's own accounting records show as having been expended on this grant.

CUSD 300 filed a timely request for review of the PDL with the OALJ. Thereafter, the Administrative Law Judge assigned to the appeal granted the parties' joint motion to conduct voluntary discovery, engage in settlement negotiations, and suspend the procedural schedule.

CUSD 300, during the course of settlement discussion with the Department, submitted documentation and analysis to support its view that $77,706.32 of questioned and

unsupported personnel costs and unsupported fringe benefit, training, and other costs disallowed by the PDL are allowable. After consideration of this documentation and analysis, the Department proposes to compromise the claim of $684,299 for $607,906.08; nearly 90% of the amount disallowed by the Director in the PDL.

Based on the amount that would be repaid by CUSD 300 under the proposed settlement agreement, the documentation CUSD 300 submitted during settlement discussions, and the litigation risks and costs of proceeding through the administrative and, possibly, court process for this appeal, the Department has determined that it would not be practical or in the public interest to continue this proceeding. Rather, under the authority in 20 U.S.C. 1234a(j), the Department has determined that compromise of this claim for $607,906.08 is appropriate.

The public is invited to comment on the Department's intent to compromise this claim. Additional information may be obtained by calling or writing to Ronald B. Petracca, Esq. at the telephone number and address listed at the beginning of this document.

Electronic Access to This Document

You may view this document, as well as all other Department of Education documents published in the **Federal Register**, in text or Adobe Portable Document Format (PDF) on the Internet at the following site: *www.ed.gov/legislation/FedRegister*.

To use PDF, you must have Adobe Acrobat Reader, which is available free at this site. If you have questions about using PDF, call the U.S. Government Printing Office (GPO), toll free, at 1–888–293–6498; or in the Washington, DC area, at (202) 512–1530.

Note: The official version of this document is the document published in the **Federal Register**. Free Internet access to the official edition of the **Federal Register** and the Code of Federal Regulations is available on GPO Access at: *http://www.access.gpo.gov/nara/index.html*.

Program Authority: 20 U.S.C. 1234a(j).

Dated: January 23, 2003.

Jack Martin,

Chief Financial Officer.

[FR Doc. 03–2108 Filed 1–29–03; 8:45 am]

BILLING CODE 4000–01–P

DEPARTMENT OF EDUCATION

Office of Special Education Programs, Office of Special Education and Rehabilitative Services, Department of Education.

ACTION: Notice of proposed extension of project period and waiver.

SUMMARY: The Secretary proposes to waive the requirements in Education Department General Administrative Regulations (EDGAR), at 34 CFR 75.250 and 75.261(a), that generally prohibit project periods exceeding 5 years and project extensions involving the obligation of additional Federal funds to enable the Technical Assistance ALLIANCE for Parent Centers to receive funding from April 1, 2003, until September 30, 2003.

DATES: We must receive your comments on or before March 3, 2003.

ADDRESSES: Address all comments concerning this proposal to Debra Sturdivant or Donna Fluke, U.S. Department of Education, 400 Maryland Avenue, SW., Room 3527, Switzer Building, Washington, DC 20202–2641. If you prefer to send your comments through the Internet, use the following address: *Debra.Sturdivant@ed.gov* or *Donna.Fluke@ed.gov.*

FOR FURTHER INFORMATION CONTACT: Debra Sturdivant, Telephone: (202) 205–8038, or Donna Fluke, Telephone: (202) 205–9161.

If you use a telecommunications device for the deaf (TDD), you may call the Federal Information Relay Service (FIRS) at 1–800–877–8339.

Individuals with disabilities may obtain this document in an alternative format (*e.g.*, Braille, large print, audiotape, or computer diskette) on request to the contact persons listed under **FOR FURTHER INFORMATION CONTACT.**

SUPPLEMENTARY INFORMATION:

Invitation to Comment

We invite you to submit comments regarding this proposed extension of project period and waiver.

During and after the comment period, you may inspect all public comments about this extension of project period and waiver in Room 3414, Switzer Building, 330 C Street, SW., Washington, DC, between the hours of 8:30 a.m. and 4 p.m., eastern time, Monday through Friday of each week except Federal holidays.

Assistance to Individuals With Disabilities in Reviewing the Rulemaking Record

On request, we will supply an appropriate aid, such as a reader or print magnifier, to an individual with a disability who needs assistance to review the comments or other documents in the public rulemaking record for this proposed extension of project period and waiver. If you want to schedule an appointment for this type of aid, you may call (202) 205–8113 or (202) 260–9895. If you use a TDD, you may call the Federal Information Relay Service at 1–800–877–8339.

Background

On July 29, 2002, we published in the **Federal Register** (67 FR 49014–49015) a notice of extension of project period and waiver. In this notice we announced that the Secretary intends to redesign the technical assistance component of the Training and Information for Parents of Children with Disabilities program and provide funding in fiscal year 2003. The notice of waiver and extension of project period was issued to enable the current technical assistance provider, the Technical Assistance ALLIANCE for Parent Centers Project to receive funding from October 1, 2002, until March 31, 2003. The grant for the ALLIANCE expired, after a 5-year project period, on September 30, 2002.

Technical assistance is provided on an ongoing basis to parent centers, and it would be contrary to the public interest to have any service lapses for the parent centers being served by the current grantee.

Reasons

We have determined that an additional period of time is needed for redesigning the technical assistance component. To avoid any lapse in service for the intended beneficiaries before the redesigned technical assistance component can be fully implemented, the Secretary proposes to fund this project until September 30, 2003. However, to do so, the Secretary must waive the requirements in 34 CFR 75.250 and 75.261(c)(2), which prohibit project periods exceeding 5 years and period extensions that involve the obligation of additional Federal funds. We are proposing a waiver at this time in order to give the affected grantee early notice of the availability of an additional six months of funding.

Regulatory Flexibility Act Certification

The Secretary certifies that the proposed waiver and extension of the project period will not have a significant economic impact on a substantial

number of small entities. The only small entity that would be affected is the PACER Center, Inc., which operates the Technical Assistance ALLIANCE for Parent Centers project.

Paperwork Reduction Act of 1995

This extension and waiver does not contain any information collection requirements.

Intergovernmental Review

This program is subject to the requirements of Executive Order 12372 and the regulations in 34 CFR part 79. One of the objectives of the Executive Order is to foster an intergovernmental partnership and a strengthened federalism. The Executive Order relies on processes developed by State and local governments for coordination and review of proposed Federal financial assistance.

This document provides early notification of our specific plans and actions for this program.

Electronic Access to This Document

You may view this document, as well as all other Department of Education documents published in the **Federal Register**, in text or Adobe Portable Document Format (PDF) on the Internet at the following site: *http://www.ed.gov/legislation/FedRegister.*

To use PDF you must have Adobe Acrobat Reader, which is available free at this site. If you have questions about using PDF, call the U.S. Government Printing Office (GPO), toll free, at 1–888–293–6498; or in the Washington, DC, area at (202) 512–1530.

Note: The official version of this document is the document published in the **Federal Register**. Free Internet access to the official edition of the **Federal Register** and the Code of Federal Regulations is available on GPO Access at: *http://www.access.gpo.gov/nara/index.html.*

(Catalog of Federal Domestic Assistance Number 84.328, Training and Information for Parents of Children with Disabilities.)

Dated: January 27, 2003.

Robert H. Pasternack,

Assistant Secretary for Special Education and Rehabilitative Services.

[FR Doc. 03–2193 Filed 1–29–03; 8:45 am]

BILLING CODE 4000–01–P

DEPARTMENT OF ENERGY

DOE Response to Recommendation 2002–2 of the Defense Nuclear Facilities Safety Board, Weapons Laboratory Support of the Defense Nuclear Complex

AGENCY: Department of Energy, DOE.

ACTION: Notice.

SUMMARY: The Defense Nuclear Facilities Safety Board Recommendation 2002–2, concerning weapons Laboratory support of the DOE nuclear complex at Department of Energy Defense Nuclear Facilities was published in the **Federal Register** on October 10, 2002 (67 FR 63081). On November 21, 2002 the Secretary requested a 45-Day Extension to respond. In accordance with section 315(b) of the Atomic Energy Act of 1954, as amended, 42 U.S.C. 2286d(b), the Secretary transmitted the following response to the Defense Nuclear Facilities Safety Board on January 8, 2003.

DATES: Comments, data, views, or arguments concerning the Secretary's response are due on or before February 7, 2003.

ADDRESSES: Send comments, data, views, or arguments concerning the Secretary's response to: Defense Nuclear Facilities Safety Board, 625 Indiana Avenue NW., Suite 700, Washington, DC 20004.

FOR FURTHER INFORMATION CONTACT: Ms. Karen L. Boardman, Director, Office of Complex Readiness, Albuquerque Operations Office, Pennsylvania & H Street, Kirtland Air Force Base, Albuquerque, NM 87116.

Issued in Washington, DC, on January 8, 2003.

Mark B. Whitaker, Jr.,

Departmental Representative to the Defense Nuclear Facilities Safety Board.

January 8, 2003.

The Honorable John T. Conway,
Chairman, Defense Nuclear Facilities Safety Board, 625 Indiana Avenue NW., Washington, DC 20004.

Dear Mr. Chairman: On October 3, 2002, the Defense Nuclear Facilities Safety Board (Board) issued recommendation 2002–2, Weapons Laboratory Support of the Defense Nuclear Complex. The Department agrees that providing the defense nuclear complex with appropriate support is an essential priority. We also recognize that ''one-size-fits-all'' organizational structures and systems are not appropriate for our weapons laboratories.

The Department accepts recommendation 2002–2 and will develop an implementation plan to accomplish the following:

- We will re-emphasize the policy that the nuclear weapons program is the top priority among all activities at the weapons laboratories.
- Each weapons laboratory will review its existing processes for assigning individuals as the senior point of contact for each weapons system and ensure that selection criteria, training and mentoring, and succession planning are in place. Personnel management is an internal process of the weapons laboratories and should not be prescribed by the Department. However, the Department will ensure that the end result is that senior technically competent individuals are assigned as the point of contact for each weapons system. A list of senior individuals assigned as the point of contact of each weapon system will be provided.
- Each weapons laboratory will review its existing management system and demonstrate that through the appropriate alignment of a combination of internal organizational structure, programs, and procedures that the roles and responsibilities of each weapons point of contact are clearly defined. The point of contact for each weapon will be empowered to direct appropriate resources to ensure the safety of operations in the nuclear weapons complex within his/her assigned weapon system or have direct access to the management authority to acquire the necessary support.
- The Department will establish and staff a Federal function at each site office managing a weapons laboratory contract to ensure that the laboratory support requirements related to safety of operations of the defense nuclear weapons complex are being tracked and met. For this function, the National Nuclear Security Administration reengineering will clarify the roles and responsibilities and the contractual lines of authority for providing direction and resolving competing requirements for resources.

I have designated Ms. Karen Boardman as the responsible manager for developing the Department's implementation plan for this recommendation. Ms. Boardman may be reached at (505) 845–6039.

Sincerely,

Signed by Secretary Spencer Abraham.

[FR Doc. 03–2165 Filed 1–29–03; 8:45 am]

BILLING CODE 6450–01–P

DEPARTMENT OF ENERGY

Federal Energy Regulatory Commission

[Project No. 2597]

Northeast Generation Company (Proposed To Be Combined With Project No. 2576); Notice of Authorization for Continued Project Operation

January 24, 2003.

On August 31, 1999, The Connecticut Light and Power Company, licensee for the Falls Village Project No. 2597, filed an application for a new or subsequent license pursuant to the Federal Power Act (FPA) and the Commission's regulations thereunder. Project No. 2597 is located on the Housatonic River in Litchfield County, Connecticut. The application proposes to combine Project No. 2597 with the licensed Housatonic Project No. 2576. The application further requests that the Commission issue a single new license for both

projects to be called the Housatonic River Project No. 2576. On November 17, 1999, the Commission issued an order transferring the licenses for Project Nos. 2597 and 2576 to Northeast Generation Company.

The license for Project No. 2597 was issued for a period ending August 31, 2001. Section 15(a)(1) of the FPA, 16 U.S.C. 808(a)(1), requires the Commission, at the expiration of a license term, to issue from year to year an annual license to the then licensee under the terms and conditions of the prior license until a new license is issued, or the project is otherwise disposed of as provided in Section 15 or any other applicable section of the FPA. If the project's prior license waived the applicability of Section 15 of the FPA, then, based on Section 9(b) of the Administrative Procedure Act, 5 U.S.C. 558(c), and as set forth at 18 CFR 16.21(a), if the licensee of such project has filed an application for a subsequent license, the licensee may continue to operate the project in accordance with the terms and conditions of the license after the minor or minor part license expires, until the Commission acts on its application. If the licensee of such a project has not filed an application for a subsequent license, then it may be required, pursuant to 18 CFR 16.21(b), to continue project operations until the Commission issues someone else a license for the project or otherwise orders disposition of the project.

If the project is subject to Section 15 of the FPA, notice is hereby given that an annual license for Project No. 2597 has been issued to Northeast Generation Company for a period effective September 1, 2001, through August 31, 2002. This license was effective until the issuance of a new license for the project or other disposition under the FPA. Because issuance of a new license (or other disposition) did not take place on or before September 1, 2002, notice is hereby given that, pursuant to 18 CFR 16.18(c), an annual license under Section 15(a)(1) of the FPA is renewed automatically without further order or notice by the Commission, unless the Commission orders otherwise.

If the project is not subject to Section 15 of the FPA, notice is hereby given that Northeast Generation Company is authorized to continue operation of the Falls Village Project No. 2597 until such time as the Commission acts on its application for subsequent license.

Magalie R. Salas,

Secretary.

[FR Doc. 03–2235 Filed 1–29–03; 8:45 am]

BILLING CODE 6717–01–P

DEPARTMENT OF ENERGY

Federal Energy Regulatory Commission

[Docket No. CP03–38–000]

Northern Natural Gas Company and Natural Gas Pipeline Company of America; Notice of Application

January 24, 2003.

Take notice that on January 9, 2003, Northern Natural Gas Company (Northern), 1111 South 103rd Street, Omaha, Nebraska 68124–1000 and Natural Gas Pipeline Company of America (Natural), 747 East 22nd Street, Lombard, Illinois 60148, filed in Docket No. CP03–38–000 a joint abbreviated application pursuant to Section 7(b) of the Natural Gas Act (NGA) and the Federal Energy Regulatory Commission's (Commission) Regulations thereunder requesting permission and approval to abandon effective January 7, 2003, an exchange service under Northern's Rate Schedule X–82 and Natural's Rate Schedule X–85 jointly authorized in Docket No. CP81–64–000.

Specifically, Northern and Natural explain that they are parties to a gas exchange agreement dated May 5, 1980, pursuant to which natural gas was delivered to various small customers in Mills County, Iowa via an exchange arrangement. Northern and Natural state that these customers are currently being supplied with gas in a manner that no longer requires the use of the exchange arrangement. Northern and Natural state that by a termination agreement dated January 7, 2003, they agreed to terminate their gas exchange agreement.

This filing is available for review at the Commission in the Public Reference Room or may be viewed on the Commission's Web site *http://www.ferc.gov* using the ''FERRIS'' link. Enter the docket number excluding the last three digits in the docket number field to access the document. For assistance, please contact FERC Online Support at *FERCOnlineSupport@ferc.gov* or toll-free at (866)208–3676, or for TTY, contact (202) 502–8659.

Any person desiring to intervene or to protest this filing should file on or before the comment date with the Federal Energy Regulatory Commission, 888 First Street, Washington, DC 20426, in accordance with Rules 211 and 214 of the Commission's Rules of Practice and Procedure (18 CFR 385.211 and 385.214) and the regulations under the Natural Gas Act (18 CFR 157.10). Protests will be considered by the Commission in determining the appropriate action to be taken, but will not serve to make the Protestants parties to the proceeding. Any person wishing to become a party must file a motion to intervene. All such motions or protests should be filed and, to the extent applicable, must be served on the applicant and on any other person designated on the official service list.

Protests and interventions may be filed electronically via the Internet in lieu of paper; *see* 18 CFR 385.2001(a)(1)(iii) and the instructions on the Commission's Web site under the ''e-Filing'' link. The Commission strongly encourages electronic filings.

Comment Date: February 14, 2003.

Magalie R. Salas,

Secretary.

[FR Doc. 03–2232 Filed 1–29–03; 8:45 am]

BILLING CODE 6717–01–P

DEPARTMENT OF ENERGY

Federal Energy Regulatory Commission

[Docket No. RP02–114–002]

Tennessee Gas Pipeline Company; Notice of Compliance and Refund Plan Filing

January 24, 2003.

Take notice that on January 21, 2003, Tennessee Gas Pipeline Company, (Tennessee) tendered for filing as part of its FERC Gas Tariff, Fifth Revised Volume No. 1, Sixth Revised Sheet No. 209A, with an effective date of February 20, 2003 and a revised refund plan.

Tennessee states that the revised tariff sheet and refund plan are being filed in accordance with the Commission's December 19, 2002 Order in the referenced proceeding, which relates to Tennessee's Cashout Report for the period from September 2000 through August 2001.

Any person desiring to protest said filing should file a protest with the Federal Energy Regulatory Commission, 888 First Street, NE., Washington, DC 20426, in accordance with section 385.211 of the Commission's Rules and Regulations. All such protests must be filed on or before January 31, 2003. Protests will be considered by the Commission in determining the appropriate action to be taken, but will not serve to make protestants parties to the proceedings. This filing is available for review at the Commission in the Public Reference Room or may be viewed on the Commission's Web site at *http://www.ferc.gov* using the ''FERRIS'' link. Enter the docket number excluding the last three digits in the docket

number field to access the document. Comments, protests and interventions may be filed electronically via the Internet in lieu of paper. For Assistance, please contact FERC Online Support at *FERCOnlineSupport@ferc.gov* or toll-free at (866) 208-3676, or TTY, contact (202) 502-8659. The Commission strongly encourages electronic filings. *See* 18 CFR 385.2001(a)(1)(iii) and the instructions on the Commission's Web site under the ''e-filing'' link.

Magalie R. Salas,

Secretary.

[FR Doc. 03–2237 Filed 1–29–03; 8:45 am]

BILLING CODE 6717–01–P

DEPARTMENT OF ENERGY

Federal Energy Regulatory Commission

[Docket No. RP02–378–001]

Texas Gas Transmission Corporation; Notice of Compliance Filing

January 24, 2003.

Take notice that on January 21, 2003, Texas Gas Transmission Corporation (Texas Gas) tendered for filing as part of its FERC Gas Tariff, First Revised Volume No. 1, the tariff sheets listed below to become effective on March 1, 2003:

First Revised Sheet No. 239.
First Revised Sheet No. 240.
First Revised Sheet No. 241.
Sheet No. 395.
Original Sheet No. 400.
Original Sheet No. 401.
Original Sheet No. 402.
Original Sheet No. 403.
Sheet No. 404.

Texas Gas states that the tariff sheets filed herewith are being submitted in compliance with the Commission's Order, which conditionally accepted Texas Gas's web-based auction proposal, effective December 31, 2002, and, in Ordering Paragraph (A), further directed Texas Gas to file within 21 days actual revised tariff sheets incorporating the pro forma modifications proposed in its October 2, 2002, submission and other changes discussed within the Order itself.

Texas Gas states that copies of the tariff sheets are being mailed to all parties in this docket, on Texas Gas's official service list, and to Texas Gas's jurisdictional customers and to interested state commissions.

Any person desiring to protest said filing should file a protest with the Federal Energy Regulatory Commission, 888 First Street, NE., Washington, DC 20426, in accordance with Section 385.211 of the Commission's Rules and Regulations. All such protests must be filed in accordance with Section 154.210 of the Commission's Regulations. Protests will be considered by the Commission in determining the appropriate action to be taken, but will not serve to make protestants parties to the proceedings. This filing is available for review at the Commission in the Public Reference Room or may be viewed on the Commission's Web site at *http://www.ferc.gov* using the ''FERRIS'' link. Enter the docket number excluding the last three digits in the docket number field to access the document. For Assistance, please contact FERC Online Support at *FERCOnlineSupport@ferc.gov* or toll-free at (866) 208–3676, or TTY, contact (202) 502–8659. The Commission strongly encourages electronic filings. *See* 18 CFR 385.2001(a)(1)(iii) and the instructions on the Commission's Web site under the ''e-Filing'' link.

Protest Date: February 3, 2003.

Magalie R. Salas,

Secretary.

[FR Doc. 03–2238 Filed 1–29–03; 8:45 am]

BILLING CODE 6717–01–P

DEPARTMENT OF ENERGY

Federal Energy Regulatory Commission

[Docket No. EC03–33–000, et al.]

Avista Corporation, et al.; Electric Rate and Corporate Filings

January 23, 2003.

The following filings have been made with the Commission. The filings are listed in ascending order within each docket classification.

1. Avista Corporation

[Docket No. EC03–48–000]

Take notice that on January 21, 2003, Avista Corporation filed with the Federal Energy Regulatory Commission (Commission) an application pursuant to Section 203 of the Federal Power Act for authorization of a disposition of jurisdictional facilities whereby Avista Corporation will sell approximately one-half mile of 115 kV transmission line to Modern Electric Company by cash sale.

Comment Date: February 11, 2003.

2. New York State Electric & Gas Corporation

[Docket No. ER97–2353–011]

Take notice that on December 27, 2002, New York State Electric & Gas Corporation (NYSEG) tendered an Errata Filing for correction to a Refund Report filed November 7, 2002 pursuant to the Commission's Opinion No. 447-B issued October 10, 2002 in the above mentioned docket.

NYSEG states that copies of the filing have been served upon the parties in the above-captioned proceeding.

Comment Date: February 3, 2003.

3. Sithe New Boston, LLC

[Docket No. ER02–648–002]

Take notice that on January 21, 2003, Sithe New Boston, LLC filed in compliance with the Commission's December 20, 2002 order in the above-captioned proceeding, 101 FERC ¶ 61,323, the Amended Reliability Must Run Agreement between Sithe New Boston and ISO New England, Inc., Sithe New Boston Rate Schedule FERC No. 3, amended to comply with the Commission's Order No. 614, Designation of Electric Rate Schedule Sheets, FERC Stats. & Regs. ¶ 31,096.

Comment Date: February 11, 2003.

4. Southwestern Public Service Company

[Docket Nos. ER02–1420–003 and ER02–1420–004]

Take notice that on January 21, 2003, Southwestern Public Service Company (Southwestern or the Company) tendered for filing a Compliance Report regarding its plans to participate in the regional transmission organization (RTO) to be formed by the proposed merger of the Midwest Independent Transmission System Operator, Inc., (Midwest ISO) and the Southwest Power Pool, Inc., (SPP).

Comment Date: February 11, 2003.

5. Quonset Point Cogen, L.P.

[Docket No. ER03–6–001]

Take notice that on January 17, 2003, Quonset Point Cogen, L.P. and PSEG Energy Technologies Inc. (Applicants) filed with the Federal Energy Regulatory Commission (Commission) a request to withdraw their November 8, 2002 request for deferral of Commission action in the above-captioned matter; and a request that the Commission resume its review, for approval, of the Thermal and Electric Energy Purchase Agreement filed on October 2, 2002 in Docket No. ER03–6–000.

Comment Date: February 7, 2003.

6. Idaho Power Company and NorthWestern Energy, a division of NorthWestern Corporation

[Docket No. ER03–102–001]

Take notice that on January 21, 2003, Idaho Power Company (Idaho Power) and NorthWestern Energy (NWE), a

division of NorthWestern Corporation, submitted a filing in compliance with the Letter Order issued December 19, 2002 in this proceeding by the Director, Division of Tariffs and Market Development—West (December 19 Order). Pursuant to the December 19 Order, Idaho Power and NWE provided revised copies of the Agreement for Load Following Services between Idaho Power and NWE designated as required by Order No. 614, FERC Stats. & Regs., ¶ 31,096.

Comment Date: February 11, 2003.

7. New York State Electric & Gas Corporation

[Docket No. ER03–316–001]

Take notice that on January 17, 2003 New York State Electric & Gas Corporation (NYSEG) tendered an Errata Filing for corrections to its December 23, 2002 filing letter for revisions to the annual charges for routine operation and maintenance and general expenses, as well as revenue and property taxes based on data from NYSEG's annual report to FERC (FERC form 1) for the twelve month period ending December 31, 2001 for the Facilities Agreement with the Steuben Rural Electric Cooperative, Inc. in the above mentioned docket.

NYSEG states that copies of the filing have been served upon the other parties to the above captioned proceeding.

Comment Date: February 11, 2003.

8. Klondike Wind Power LLC

[Docket No. ER03–416–001]

Take notice that on January 21, 2003, Klondike Wind Power LLC (Klondike) submitted for filing a revised market-based tariff (Tariff) with the Federal Energy Regulatory Commission (Commission) reflecting its name change from West Valley Generation LLC. Klondike requests waiver of the 60-day prior notice requirement to allow its revised Tariff to become effective as of December 19, 2002.

Comment Date: February 11, 2003.

9. PPL Electric Utilities Corporation

[Docket No. ER03–431–000]

Take notice that on January 21, 2003, PPL Electric Utilities Corporation (PPL Electric) filed with the Federal Energy Regulatory Commission an executed Generator Interconnection Agreement between PPL Electric and Lower Mount Bethel Energy, LLC (Lower Mount Bethel).

PPL Electric and Lower Mount Bethel request an effective date for the Interconnection Agreement of March 24, 2003, which is the first business day falling at least sixty days from the date of filing.

Comment Date: February 11, 2003.

10. SP Newsprint Co.

[Docket No. ER03–432–000]

Take notice that on January 21, 2003, SP Newsprint Co. tendered for filing an application for authorization to sell energy, capacity, and other auxiliary services at market-based rates pursuant to Section 205 of the Federal Power Act.

Comment Date: February 11, 2003.

11. Progress Energy Service Company, on behalf of Progress Energy Carolinas, Inc.

[Docket No. ER03–433–000]

Take notice that on January 21, 2003, Progress Energy Service Company on behalf of Progress Energy Carolinas, Inc., (Progress Carolinas) tendered for filing an executed long-term Service Agreement between Progress Carolinas and the following eligible buyer, The Town of Waynesville, NC. Service to this eligible buyer will be in accordance with the terms and conditions of Progress Carolinas' Market-Based Rates Tariff, FERC Electric Tariff No. 5.

Progress Carolinas requests an effective date of January 1, 2003 for this Service Agreement. Progress Carolinas also states that copies of the filing were served upon the North Carolina Utilities Commission and the South Carolina Public Service Commission.

Comment Date: February 11, 2003.

Standard Paragraph

Any person desiring to intervene or to protest this filing should file with the Federal Energy Regulatory Commission, 888 First Street, NE., Washington, DC 20426, in accordance with Rules 211 and 214 of the Commission's Rules of Practice and Procedure (18 CFR 385.211 and 385.214). Protests will be considered by the Commission in determining the appropriate action to be taken, but will not serve to make protestants parties to the proceeding. Any person wishing to become a party must file a motion to intervene. All such motions or protests should be filed on or before the comment date, and, to the extent applicable, must be served on the applicant and on any other person designated on the official service list. This filing is available for review at the Commission or may be viewed on the Commission's Web site at *http://www.ferc.gov* , using the ''FERRIS'' link. Enter the docket number excluding the last three digits in the docket number field to access the document. For assistance, please contact FERC Online Support at *FERCOnlineSupport@ferc.gov* or toll-free at (866)208–3676, or for TTY, contact (202)502–8659. Protests and interventions may be filed electronically via the Internet in lieu of paper; *see* 18 CFR 385.2001(a)(1)(iii) and the instructions on the Commission's Web site under the ''e-Filing'' link. The Commission strongly encourages electronic filings.

Magalie R. Salas,

Secretary.

[FR Doc. 03–2233 Filed 1–29–03; 8:45 am]

BILLING CODE 6717–01–P

DEPARTMENT OF ENERGY

Federal Energy Regulatory Commission

[Docket No. CP02–37–000]

Williston Basin Interstate Pipeline Company; Notice of Availability of and Public Comment Meetings on the Draft Environmental Impact Statement for the Proposed Grasslands Project

January 24, 2003.

The staff of the Federal Energy Regulatory Commission (FERC or Commission) has prepared a Draft Environmental Impact Statement (DEIS) on the natural gas pipeline facilities proposed by Williston Basin Interstate Pipeline Company (WBI) in the above referenced docket.

The DEIS was prepared to satisfy the requirements of the National Environmental Policy Act. The staff concludes that approval of the proposed project, with the appropriate mitigating measures as recommended, would have limited adverse environmental impact. The DEIS also evaluates alternatives to the proposal, including system alternatives, major route alternatives, and route variations.

The U.S. Department of the Interior, Bureau of Land Management (BLM) is participating as a cooperating agency in the preparation of this DEIS because the project would cross Federal land under the jurisdiction of two field offices in Wyoming and Montana. The U.S. Department of Agriculture, Forest Service (USFS) is also a cooperating agency in the preparation of this document because the Little Missouri National Grasslands would be crossed by the project. The DEIS will be used by the BLM to consider issuance of a right-of-way grant for the portion of the project on all Federal lands.

The DEIS addresses the potential environmental effects of the construction and operation of the following facilities:

- Approximately 223 miles of new 16-inch-diameter pipeline from near Belle Creek, Montana, to the proposed

Manning Compressor Station in Dunn County, North Dakota;

• Approximately 28 miles of 16-inch-diameter pipeline loop [1] adjacent to WBI's existing Bitter Creek supply lateral pipeline in Wyoming;

• Maximum allowable operating pressure (MAOP) upgrade on approximately 28 miles of existing 8-inch-diameter Bitter Creek supply lateral pipeline in Wyoming from 1,203 pounds per square inch gauge (psig) to 1,440 psig, and abandonment in-place of segments of existing pipe at three road crossings and replacement with heavier walled pipe;

• MAOP upgrade on approximately 40 miles of existing 8-inch-diameter Recluse-Belle Creek supply lateral pipeline in Wyoming and Montana from 1,203 psig to 1,440 psig, and abandonment in-place of segments of existing pipe at eight road crossings and replacement with heavier walled pipe;

• 4,180 horsepower (hp) of gas fired compression (comprised of two 2,090 hp compressors) at one new compressor station located in Dunn County, North Dakota (Manning Compressor Station), and electric coolers installation at this station;

• An additional transmission compressor unit (1,200 hp) at the existing Cabin Creek Compressor Station in Fallon County, Montana;

• 0.9 mile of 12-inch-diameter pipeline from the proposed mainline to the existing Cabin Creek Compressor Station in Fallon County, Montana;

• 1.0 mile of 16-inch-diameter pipeline from the proposed Manning Compressor Station to interconnect with Northern Border Pipeline Company's Compressor Station 5 in Dunn County, North Dakota; and

• Various additional facilities, including 14 mainline valves, 4 cathodic protection units, 8 pig launchers/receivers, 5 metering stations, and 2 regulators.

The purpose of the proposed facilities would be to provide an additional outlet for the increased production of natural gas in the Powder River Basin, allowing transportation of about 80 million cubic feet per day of natural gas; provide access to WBI's storage facilities to shippers of gas produced in the Powder River Basin and elsewhere; and provide access to and from WBI's storage facilities to and from the facilities of Northern Border Pipeline Company for delivery to Midwestern and other national markets.

[1] A loop is a segment of pipeline that is usually installed adjacent to an existing pipeline and connected to it at both ends. The loop allows more gas to be moved through the system.

Comment Procedures and Public Meeting

Any person wishing to comment on the DEIS may do so. To ensure consideration prior to a Commission decision on the proposal, it is important that we receive your comments before the date specified below. Please carefully follow these instructions to ensure that your comments are received in time and properly recorded:

• Send an original and two copies of your comments to: Secretary, Federal Energy Regulatory Commission, 888 First St., NE., Room 1A, Washington, DC 20426;

• Label one copy of the comments for the attention of Gas Branch 1, PJ11.1;

• Reference Docket No. CP02–37–000; and

• Mail your comments so that they will be received in Washington, DC on or before March 17, 2003.

Please note that we are continuing to experience delays in mail deliveries from the U.S. Postal Service. As a result, we will include all comments that we receive within a reasonable time frame in our environmental analysis of this project. However, the Commission strongly encourages electronic filing of any comments or interventions or protests to this proceeding. *See* 18 CFR 385.2001(a)(1)(iii) and the instructions on the Commission's Web site at *http://www.ferc.gov* under the ''e-Filing'' link and the link to the User's Guide. Before you can file comments you will need to create a free account which can be created by clicking on ''Login to File'' and then ''New User Account.''

In addition to or in lieu of sending written comments, the FERC invites you to attend the public meetings the staff will conduct in the project area to receive comments on the DEIS. All meetings will begin at 7 p.m., and are scheduled as follows:

Date/Location

Monday, March 3, 2003—Travelodge Hotel, 532 15th St. W., Dickinson, North Dakota, (701) 483–5600

Tuesday, March 4, 2003—Fallon County Fairgrounds, Exhibit Hall, Baker, Montana, (406) 778–2451

Wednesday, March 5, 2003—Tower West Lodge, 109 N U.S. Highway 14/16, Gillette, Wyoming, (307) 686–2210

Interested groups and individuals are encouraged to attend and present oral comments on the DEIS. Transcripts of the meetings will be prepared.

After these comments are reviewed, any significant new issues are investigated, and modifications are made to the DEIS, a Final Environmental Impact Statement (FEIS) will be published and distributed by the staff. The FEIS will contain the staff's responses to timely comments filed on the DEIS.

Comments will be considered by the Commission but will not serve to make the commentor a party to the proceeding. Any person seeking to become a party to the proceeding must file a motion to intervene pursuant to Rule 214 of the Commission's Rules of Practice and Procedures (18 CFR 385.214).

Anyone may intervene in this proceeding based on this DEIS. You must file your request to intervene as specified above.[2] You do not need intervenor status to have your comments considered.

The DEIS has been placed in the public files of the FERC and is available for public inspection at: Federal Energy Regulatory Commission, Public Reference and Files Maintenance Branch, 888 First Street, NE., Room 2A, Washington, DC 20426, (202) 502–8371.

A limited number of copies of the DEIS are available from the Public Reference and Files Maintenance Branch identified above. In addition, copies of the DEIS have been mailed to Federal, state and local agencies, public interest groups, individuals who have requested the DEIS, newspapers, and parties to this proceeding.

Additional information about the project is available from the Commission's Office of External Affairs, at 1–866–208–FERC or on the FERC Internet Web site (*http://www.ferc.gov*) using the FERRIS link. Click on the FERRIS link, enter the docket number excluding the last three digits in the Docket Number field. Be sure you have selected an appropriate date range. For assistance with FERRIS, the FERRIS helpline can be reached at 1–866–208–3676, TTY (202) 502–8659 or at *FERCOnlineSupport@ferc.gov*. The FERRIS link on the FERC Internet Web site also provides access to the texts of formal documents issued by the Commission, such as orders, notices, and rulemakings.

Information concerning the involvement of the BLM is available from Dalice Landers, Realty Specialist and Project Lead at (406) 233–2836. Information concerning the involvement of the USFS is available from Tina

[2] Interventions may also be filed electronically via the Internet in lieu of paper. *See* the previous discussion on filing comments electronically.

Thornton, Realty Specialist and Project Lead at (701) 225–5151.

Magalie R. Salas,

Secretary.

[FR Doc. 03–2231 Filed 1–29–03; 8:45 am]

BILLING CODE 6717–01–P

DEPARTMENT OF ENERGY

Federal Energy Regulatory Commission

[Project No. 12400–000]

Notice of Application Accepted for Filing and Soliciting Motions To Intervene, Protests, and Comments

January 24, 2003.

Take notice that the following hydroelectric application has been filed with the Commission and is available for public inspection:

a. *Type of Application:* Preliminary Permit.

b. *Project No.:* 12400–000.

c. *Date filed:* October 28, 2002.

d. *Applicant:* Universal Electric Power Corp.

e. *Name of Project:* Mississippi Lock and Dam #22 Project.

f. *Location:* On Mississippi River, in Ralls County, Missouri, utilizing the U.S. Army Corps of Engineers' Mississippi Lock and Dam #22.

g. *Filed Pursuant to:* Federal Power Act, 16 U.S.C. 791(a)—825(r).

h. *Applicant Contact:* Mr. Raymond Helter, Universal Electric Power Corp., 1145 Highbrook Street, Akron, OH 44301, (330) 535–7115.

i. *FERC Contact:* Robert Bell, (202) 502–6062.

j. *Deadline for filing comments, protests, and motions to intervene:* 60 days from the issuance date of this notice.

All documents (original and eight copies) should be filed with: Magalie R. Salas, Secretary, Federal Energy Regulatory Commission, 888 First Street, NE., Washington, DC 20426. Comments, protests, and interventions may be filed electronically via the Internet in lieu of paper; *see* 18 CFR 385.2001(a)(1)(iii) and the instructions on the Commission's Web site under the ''e-Filing'' link. The Commission strongly encourages electronic filings. Please include the project number (P–12400–000) on any comments or motions filed. The Commission's Rules of Practice and Procedure require all interveners filing documents with the Commission to serve a copy of that document on each person in the official service list for the project. Further, if an intervener files comments or documents with the Commission relating to the merits of an issue that may affect the responsibilities of a particular resource agency, they must also serve a copy of the document on that resource agency.

k. *Description of Project:* The proposed project would utilize the Corps' existing Mississippi Lock and Dam #22 and consist of: (1) Eight proposed 80-foot-long, 108-inch-diameter steel penstocks, (2) a proposed powerhouse containing eight generating units having an installed capacity of 10 MW, (3) a proposed 200-foot-long, 14.7 kV transmission line, and (4) appurtenant facilities.

Applicant estimates that the average annual generation would be 61 GWh and would be sold to a local utility.

l. This filing is available for review at the Commission in the Public Reference Room or may be viewed on the Commission's Web site at *http://www.ferc.gov* using the ''FERRIS'' link. Enter the docket number excluding the last three digits in the docket number field to access the document. For assistance, call toll-free 1–866–208–3676 or e-mail *ferconlineSupport@ferc.gov*. For TTY, call (202) 502–8659. A copy is also available for inspection and reproduction at the address in item h above.

m. *Competing Preliminary Permit:* Anyone desiring to file a competing application for preliminary permit for a proposed project must submit the competing application itself, or a notice of intent to file such an application, to the Commission on or before the specified comment date for the particular application (*see* 18 CFR 4.36). Submission of a timely notice of intent allows an interested person to file the competing preliminary permit application no later than 30 days after the specified comment date for the particular application. A competing preliminary permit application must conform with 18 CFR 4.30(b) and 4.36.

n. *Competing Development Application:* Any qualified development applicant desiring to file a competing development application must submit to the Commission, on or before a specified comment date for the particular application, either a competing development application or a notice of intent to file such an application. Submission of a timely notice of intent to file a development application allows an interested person to file the competing application no later than 120 days after the specified comment date for the particular application. A competing license application must conform with 18 CFR 4.30(b) and 4.36.

o. *Notice of Intent:* A notice of intent must specify the exact name, business address, and telephone number of the prospective applicant, and must include an unequivocal statement of intent to submit, if such an application may be filed, either a preliminary permit application or a development application (specify which type of application). A notice of intent must be served on the applicant(s) named in this public notice.

p. *Proposed Scope of Studies under Permit:* A preliminary permit, if issued, does not authorize construction. The term of the proposed preliminary permit would be 36 months. The work proposed under the preliminary permit would include economic analysis, preparation of preliminary engineering plans, and a study of environmental impacts. Based on the results of these studies, the Applicant would decide whether to proceed with the preparation of a development application to construct and operate the project.

q. *Comments, Protests, or Motions to Intervene:* Anyone may submit comments, a protest, or a motion to intervene in accordance with the requirements of Rules of Practice and Procedure, 18 CFR 385.210, .211, .214. In determining the appropriate action to take, the Commission will consider all protests or other comments filed, but only those who file a motion to intervene in accordance with the Commission's Rules may become a party to the proceeding. Any comments, protests, or motions to intervene must be received on or before the specified comment date for the particular application.

r. *Filing and Service of Responsive Documents:* Any filings must bear in all capital letters the title ''COMMENTS'', ''NOTICE OF INTENT TO FILE COMPETING APPLICATION'', ''COMPETING APPLICATION'', ''PROTEST'', ''MOTION TO INTERVENE'', as applicable, and the Project Number of the particular application to which the filing refers. Any of the above-named documents must be filed by providing the original and the number of copies provided by the Commission's regulations to: The Secretary, Federal Energy Regulatory Commission, 888 First Street, NE., Washington, DC 20426. An additional copy must be sent to Director, Division of Hydropower Administration and Compliance, Federal Energy Regulatory Commission, at the above-mentioned address. A copy of any notice of intent, competing application or motion to intervene must also be served upon each representative of the Applicant specified in the particular application.

s. *Agency Comments:* Federal, state, and local agencies are invited to file comments on the described application. A copy of the application may be obtained by agencies directly from the Applicant. If an agency does not file comments within the time specified for filing comments, it will be presumed to have no comments. One copy of an agency's comments must also be sent to the Applicant's representatives.

Magalie R. Salas,

Secretary.

[FR Doc. 03–2234 Filed 1–29–03; 8:45 am]

BILLING CODE 6717–01–P

DEPARTMENT OF ENERGY

Federal Energy Regulatory Commission

[Docket No. RM98–1–000]

Regulations Governing Off-the-Record Communications; Public Notice

January 24, 2003.

This constitutes notice, in accordance with 18 CFR 385.2201(h), of the receipt of exempt and prohibited off-the-record communications.

Order No. 607 (64 FR 51222, September 22, 1999) requires Commission decisional employees, who make or receive an exempt or a prohibited off-the-record communication relevant to the merits of a contested on-the-record proceeding, to deliver a copy of the communication, if written, or a summary of the substance of any oral communication, to the Secretary.

Prohibited communications will be included in a public, non-decisional file associated with, but not part of, the decisional record of the proceeding. Unless the Commission determines that the prohibited communication and any responses thereto should become part of the decisional record, the prohibited off-the-record communication will not be considered by the Commission in reaching its decision. Parties to a proceeding may seek the opportunity to respond to any facts or contentions made in a prohibited off-the-record communication, and may request that the Commission place the prohibited communication and responses thereto in the decisional record. The Commission will grant such requests only when it determines that fairness so requires. Any person identified below as having made a prohibited off-the-record communication should serve the document on all parties listed on the official service list for the applicable proceeding in accordance with Rule 2010, 18 CFR 385.2010.

Exempt off-the-record communications will be included in the decisional record of the proceeding, unless the communication was with a cooperating agency as described by 40 CFR 1501.6, made under 18 CFR 385.2201(e)(1)(v).

The following is a list of exempt and prohibited off-the-record communications recently received in the Office of the Secretary. These filings are available for review at the Commission in the Public Reference Room or may be viewed on the Commission's Web site at *http://www.ferc.gov* using the ''FERRIS'' link. Enter the docket number excluding the last three digits in the docket number field to access the document. For Assistance, please contact FERC Online Support at *FERCOnlineSupport@ferc.gov* or toll-free at (866)208–3676, or for TTY, contact (202)502–8659.

EXEMPT

Docket No.	Date filed	Presenter or Requester
1. Project No. 2042–000	1–22–03	Frank Winchell.
2. Project No. 1927–000	1–22–03	Richard Hoffman.*
3. Project No. 1971–000	1–22–03	Kenneth C. Reid, Ph.D./ Susan Pengilly Neitzel.
4. Project No. 1971–000	1–22–03	Jay Minthorn.
5. RT02–2–000	1–23–03	Len Tao.
6. Project No. 5018–004	1–24–03	Caleb Slater.

*Copy of Programmatic Agreement.

Magalie R. Salas,

Secretary.

[FR Doc. 03–2236 Filed 1–29–03; 8:45 am]

BILLING CODE 6717–01–P

ENVIRONMENTAL PROTECTION AGENCY

[FRL 7446–5]

EPA Science Advisory Board; Notification of Ecological Processes and Effects Committee Meeting; Request for Comments on the Consultative Panel

Purpose of this Notice—To: (1) Announce a public meeting of a Federal advisory committee, and (2) solicit public comment on the proposed consultative panel.

1. Meeting of the Ecological Processes and Effects Committee (EPEC)—February 13–14, 2003

Pursuant to the Federal Advisory Committee Act, Pub. L. 92–463, notice is hereby given that the Ecological Processes and Effects Committee (EPEC) of the U.S. EPA Science Advisory Board (SAB) will meet on Thursday and Friday, February 13–14, 2003 to conduct a consultation with the EPA Office of Water on its plans to revise the ''Guidelines for Deriving Numerical National Water Quality Criteria for the Protection of Aquatic Organisms and Their Uses''; to receive Agency briefings on ecological science priorities; and to discuss potential future SAB studies. All times noted are Eastern Time. The meeting is open to the public, however, seating is limited and available on a first come basis. *Important Notice:* Documents that are the subject of SAB reviews or consultations are normally available from the originating EPA office and are not available from the SAB Office—information concerning availability of documents generated by the SAB and the relevant Program Office is included below.

The meeting will begin on Thursday, February 13 at 9 am and adjourn no later than 5:30 pm that day. On Friday, February 14 the meeting may begin at 8:30 am and adjourn no later than 5:30 pm. The meeting will be held in EPA Conference Room 4530 in the EPA Ariel Rios North Building, 1200 Pennsylvania Avenue, NW., Washington, DC 20004. For further information concerning the meeting, please contact the individuals listed at the end of this *FR* notice.

Availability of the Meeting Materials

The materials are available from the Office of Water (OW) Web site, located at: *http://epa.gov/waterscience/criteria/aqlife.html.* The existing guidelines subject to revision are available through the National Technology Information Service at *http://www.NTIS.gov.* The document number for ordering the Guidelines is: PB85227049. For questions and information concerning the materials, please contact Ms. Heidi Bell, U.S. Environmental Protection Agency, 1200 Pennsylvania Ave, NW., Washington, DC 20460; tel. (202) 566–1089, or e-mail: *bell.heidi@epa.gov.*

2. Solicitation of Public Comment on the Proposed Consultative Panel

A ''consultation'' is one of several types of formal interaction between the Agency and the Science Advisory Board. The purpose of a consultation is to conduct an early discussion between the Agency and the SAB to help articulate important issues in the development of a project. The meeting is public and consists of briefings and discussions. In some cases a partial document, or an early draft is available to serve a the basis for discussions. A charge is often used, but is less focused than that used in a formal peer review. No consensus advice is sought and no report is generated by the SAB.

To provide the Agency with meaningful input, we have determined that the following expertise is needed for the consultation: ecotoxicology, chemistry, ecological risk assessment, and uncertainty analysis. The EPA Science Advisory Board Staff Office has determined that the Ecological Processes and Effects Committee (EPEC), a standing committee of the Board, will conduct this consultation since EPEC already has the appropriate expertise without the need for additional expert consultants. Therefore, we are not soliciting additional experts for this consultation.

The SAB Staff Office will post the names and biosketches for members of the consultative Panel on the SAB Web site at: *http://www.epa.gov/sab.* Public comments will be accepted until February 7, 2003 on the information provided. During this comment period, the public will be requested to provide information, analysis or other documentation relevant to the membership of the panel for the Staff Office's final decision. Information, analysis or documentation must be received by the EPEC Designated Federal Officer (DFO) no later than February 7, 2003. Please see the address/contact information noted below.

For the EPA SAB, a balanced review panel (*i.e.*, committee, subcommittee, or panel) is characterized by inclusion of candidates who possess the necessary domains of knowledge, the relevant scientific perspectives (which, among other factors, can be influenced by work history and affiliation), and the collective breadth of experience to adequately address the charge. Information provided by the public will be considered in the selection of the panel, along with information provided by candidates and information gathered by EPA SAB Staff independently on the background of each candidate (*e.g.*, financial disclosure information and computer searches to evaluate a nominee's prior involvement with the topic under review). Specific criteria to be used in evaluating an individual subcommittee member include: (a) scientific and/or technical expertise, knowledge, and experience (primary factors); (b) availability and willingness to serve; (c) absence of financial conflicts of interest; (d) scientific credibility and impartiality; and (e) ability to work constructively and effectively in committees.

3. General Information

Providing Oral or Written Comments at SAB Meetings

It is the policy of the EPA Science Advisory Board (SAB) to accept written public comments of any length, and to accommodate oral public comments whenever possible. The EPA SAB expects that public statements presented at its meetings will not be repetitive of previously submitted oral or written statements. *Oral Comments:* In general, each individual or group requesting an oral presentation at a face-to-face meeting will be limited to a total time of ten minutes (unless otherwise indicated). For teleconference meetings, opportunities for oral comment will usually be limited to no more than three minutes per speaker and no more than fifteen minutes total. Interested parties should contact the DFO at least one week prior to the meeting in order to be placed on the public speaker list for the meeting. Speakers may attend the meeting and provide comment up to the meeting time. Speakers should bring at least 35 copies of their comments and presentation slides for distribution to the reviewers and public at the meeting. *Written Comments:* Although the SAB accepts written comments until the date of the meeting (unless otherwise stated), written comments should be received in the SAB Staff Office at least one week prior to the meeting date so that the comments may be made available to the review panel for their consideration. Comments should be supplied to the EPEC DFO at the address/contact information noted above in the following formats: one hard copy with original signature, and one electronic copy via e-mail (acceptable file format: Adobe Acrobat, WordPerfect, Word, or Rich Text files (in IBM–PC/Windows 95/98 format). Those providing written comments and who attend the meeting are also asked to bring 35 copies of their comments for public distribution. Should comment be provided at the meeting and not in advance of the meeting, they should be in-hand to the DFO up to and immediately following the meeting. The SAB allows a grace period of 48 hours after adjournment of the public meeting to provide written comments supporting any verbal comments stated at the public meeting to be made a part of the public record.

For Further Information

Any member of the public wishing further information concerning this meeting, who wish to submit brief oral comments, or have comment on the constitution or balance of EPEC membership, must contact Mr. Lawrence Martin, DFO, USEPA Science Advisory Board (1400A), Suite 6450, 1200 Pennsylvania Avenue, NW., Washington, DC 20460; telephone/voice mail at (202) 564–6497; fax at (202) 501–0582; or via e-mail at *martin.lawrence@epa.gov.* Requests for oral comments must be *in writing* (e-mail, fax or mail) and received by Mr. Martin no later than noon Eastern Time five business days prior to the meeting date (February 7, 2003).

Members of the public desiring additional information about the meeting location must contact Ms. Zisa Lubarov-Walton, EPA Science Advisory Board (1400A), Suite 6450, U.S. EPA, 1200 Pennsylvania Avenue, NW., Washington, DC 20460; telephone/voice mail at (202) 564–4537; fax at (202) 501–0582; or via e-mail at *Zisa Lubarov-Walton@epa.gov.*

A copy of the draft agenda for the meeting will be posted on the SAB Web site *(http://www.epa.gov/sab)* (under the AGENDAS subheading) approximately 10 days before the meeting.

Meeting Access

Individuals requiring special accommodation at this meeting, including wheelchair access to the conference room, should contact Ms. Lubarov-Walton at least five business days prior to the meeting so that appropriate arrangements can be made.

Dated: January 27, 2003.

Vanessa T. Vu,

Director, EPA Science Advisory Board Staff Office.

[FR Doc. 03–2334 Filed 1–29–03; 8:45 am]

BILLING CODE 6560–50–P

ENVIRONMENTAL PROTECTION AGENCY

[FRL–7445–6]

Notice of Availability of Enforcement and Compliance History Online Web Site for 60–Day Comment Period; Extension

AGENCY: Environmental Protection Agency (EPA).

ACTION: Notice of extension of original comment period.

SUMMARY: The Office of Compliance (OC), within EPA's Office of Enforcement and Compliance Assurance (OECA), announces an extension of the comment period from the originally scheduled deadline of January 21, 2003, to March 31, 2003, for its pilot Web site, Enforcement and Compliance History Online (ECHO), which contains searchable, facility-level enforcement and compliance information.

DATES: Comments must be submitted no later than March 31, 2003.

ADDRESSES: The Web site is available at *http://www.epa.gov/echo.* Comments may be submitted to *echo@epa.gov* as a Word or WordPerfect file or mailed to Rebecca Kane, Environmental Protection Agency, Office of Enforcement and Compliance Assurance, MC 2222A, 1200 Pennsylvania Avenue NW., Washington, DC, 20460. Specific data errors should be submitted using the error correction process on the ECHO site.

FOR FURTHER INFORMATION CONTACT: Rebecca Kane at *kane.rebecca@epa.gov* or (202) 564–5960.

SUPPLEMENTARY INFORMATION: Due to several requests from stakeholders, EPA has extended ECHO's comment period, which was scheduled to end on January 21, 2003, to March 31, 2003. The site's availability and comment period were announced in the **Federal Register** on November 20, 2002. The original notice, a link to which is posted on the ECHO site, provides detailed information on ECHO and specific questions for consideration.

Dated: January 21, 2003.

Michael M. Stahl,

Director, Office of Compliance.

[FR Doc. 03–2177 Filed 1–29–03; 8:45 am]

BILLING CODE 6560–50–P

ENVIRONMENTAL PROTECTION AGENCY

[OPPT–2003–0001; FRL–7288–2]

Certain New Chemicals; Receipt and Status Information

AGENCY: Environmental Protection Agency (EPA).

ACTION: Notice.

SUMMARY: Section 5 of the Toxic Substances Control Act (TSCA) requires any person who intends to manufacture (defined by statute to include import) a new chemical (i.e., a chemical not on the TSCA Inventory) to notify EPA and comply with the statutory provisions pertaining to the manufacture of new chemicals. Under sections 5(d)(2) and 5(d)(3) of TSCA, EPA is required to publish a notice of receipt of a premanufacture notice (PMN) or an application for a test marketing exemption (TME), and to publish periodic status reports on the chemicals under review and the receipt of notices of commencement to manufacture those chemicals. This status report, which covers the period from December 11, 2002 to December 26, 2002, consists of the PMNs pending or expired, and the notices of commencement to manufacture a new chemical that the Agency has received under TSCA section 5 during this time period.

DATES: Comments identified by the docket ID number OPPT– 2003–0001 and the specific PMN number or TME number, must be received on or before March 3, 2003.

ADDRESSES: Comments may be submitted electronically, by mail, or through hand delivery/courier. Follow the detailed instructions as provided in Unit I. of the **SUPPLEMENTARY INFORMATION.**

FOR FURTHER INFORMATION CONTACT: Barbara Cunningham, Acting Director, Environmental Assistance Division, Office of Pollution Prevention and Toxics (7408M), Environmental Protection Agency, 1200 Pennsylvania Ave., NW., Washington, DC 20460–0001; telephone number: (202) 554–1404; e-mail address: *TSCA-Hotline@epa.gov.*

SUPPLEMENTARY INFORMATION:

I. General Information

A. Does this Action Apply to Me?

This action is directed to the public in general. As such, the Agency has not attempted to describe the specific entities that this action may apply to. Although others may be affected, this action applies directly to the submitter of the premanufacture notices addressed in the action. If you have any questions regarding the applicability of this action to a particular entity, consult the person listed under **FOR FURTHER INFORMATION CONTACT.**

B. How Can I Get Copies of This Document and Other Related Information?

1. *Docket.* EPA has established an official public docket for this action under docket identification (ID) number OPPT–2003–0001. The official public docket consists of the documents specifically referenced in this action, any public comments received, and other information related to this action. Although a part of the official docket, the public docket does not include Confidential Business Information (CBI) or other information whose disclosure is restricted by statute. The official public docket is the collection of materials that is available for public viewing at the EPA Docket Center, Rm. B102-Reading Room, EPA West, 1301 Constitution Ave., NW., Washington, DC. The EPA Docket Center is open from 8:30 a.m. to 4:30 p.m., Monday through Friday, excluding legal holidays. The EPA Docket Center Reading Room telephone number is (202) 566–1744 and the telephone number for the OPPT Docket, which is located in EPA Docket Center, is (202) 566–0280.

2. *Electronic access.* You may access this **Federal Register** document electronically through the EPA Internet under the ''**Federal Register**'' listings at *http://www.epa.gov/fedrgstr/.*

An electronic version of the public docket is available through EPA's electronic public docket and comment system, EPA Dockets. You may use EPA Dockets at *http://www.epa.gov/edocket/* to submit or view public comments, access the index listing of the contents of the official public docket, and to access those documents in the public docket that are available electronically. Although not all docket materials may be available electronically, you may still access any of the publicly available docket materials through the docket facility identified in Unit I.B.1. Once in the system, select ''search,'' then key in the appropriate docket ID number.

Certain types of information will not be placed in the EPA Dockets. Information claimed as CBI and other information whose disclosure is restricted by statute, which is not included in the official public docket, will not be available for public viewing in EPA's electronic public docket. EPA's policy is that copyrighted material will not be placed in EPA's electronic public docket but will be available only in

printed, paper form in the official public docket. To the extent feasible, publicly available docket materials will be made available in EPA's electronic public docket. When a document is selected from the index list in EPA Dockets, the system will identify whether the document is available for viewing in EPA's electronic public docket. Although not all docket materials may be available electronically, you may still access any of the publicly available docket materials through the docket facility identified in Unit I.B.1. EPA intends to work towards providing electronic access to all of the publicly available docket materials through EPA's electronic public docket.

For public commenters, it is important to note that EPA's policy is that public comments, whether submitted electronically or in paper, will be made available for public viewing in EPA's electronic public docket as EPA receives them and without change, unless the comment contains copyrighted material, CBI, or other information whose disclosure is restricted by statute. When EPA identifies a comment containing copyrighted material, EPA will provide a reference to that material in the version of the comment that is placed in EPA's electronic public docket. The entire printed comment, including the copyrighted material, will be available in the public docket.

Public comments submitted on computer disks that are mailed or delivered to the docket will be transferred to EPA's electronic public docket. Public comments that are mailed or delivered to the docket will be scanned and placed in EPA's electronic public docket. Where practical, physical objects will be photographed, and the photograph will be placed in EPA's electronic public docket along with a brief description written by the docket staff.

C. How and To Whom Do I Submit Comments?

You may submit comments electronically, by mail, or through hand delivery/courier. To ensure proper receipt by EPA, identify the appropriate docket ID number and specific PMN number or TME number in the subject line on the first page of your comment. Please ensure that your comments are submitted within the specified comment period. Comments received after the close of the comment period will be marked ''late.'' EPA is not required to consider these late comments. If you wish to submit CBI or information that is otherwise protected by statute, please follow the instructions in Unit I.D. Do not use EPA Dockets or e-mail to submit CBI or information protected by statute.

1. *Electronically*. If you submit an electronic comment as prescribed in this unit, EPA recommends that you include your name, mailing address, and an e-mail address or other contact information in the body of your comment. Also include this contact information on the outside of any disk or CD ROM you submit, and in any cover letter accompanying the disk or CD ROM. This ensures that you can be identified as the submitter of the comment and allows EPA to contact you in case EPA cannot read your comment due to technical difficulties or needs further information on the substance of your comment. EPA's policy is that EPA will not edit your comment, and any identifying or contact information provided in the body of a comment will be included as part of the comment that is placed in the official public docket, and made available in EPA's electronic public docket. If EPA cannot read your comment due to technical difficulties and cannot contact you for clarification, EPA may not be able to consider your comment.

i. *EPA Dockets*. Your use of EPA's electronic public docket to submit comments to EPA electronically is EPA's preferred method for receiving comments. Go directly to EPA Dockets at *http://www.epa.gov/edocket*, and follow the online instructions for submitting comments. Once in the system, select'' search,'' and then key in docket ID number OPPT–2003–0001. The system is an'' anonymous access'' system, which means EPA will not know your identity, e-mail address, or other contact information unless you provide it in the body of your comment.

ii. *E-mail*. Comments may be sent by e-mail to *oppt.ncic@epa.gov*, Attention: Docket ID Number OPPT–2003–0001 and PMN Number or TME Number. In contrast to EPA's electronic public docket, EPA's e-mail system is not an ''anonymous access'' system. If you send an e-mail comment directly to the docket without going through EPA's electronic public docket, EPA's e-mail system automatically captures your e-mail address. E-mail addresses that are automatically captured by EPA's e-mail system are included as part of the comment that is placed in the official public docket, and made available in EPA's electronic public docket.

iii. *Disk or CD ROM*. You may submit comments on a disk or CD ROM that you mail to the mailing address identified in Unit I.C.2. These electronic submissions will be accepted in WordPerfect or ASCII file format. Avoid the use of special characters and any form of encryption.

2. *By mail*. Send your comments to: Document Control Office (7407M), Office of Pollution Prevention and Toxics (OPPT), Environmental Protection Agency, 1200 Pennsylvania Ave., NW., Washington, DC 20460–0001.

3. *By hand delivery or courier*. Deliver your comments to: OPPT Document Control Office (DCO) in EPA East Building Rm. 6428, 1201 Constitution Ave., NW., Washington, DC. Attention: Docket ID Number OPPT–2003–0001 and PMN Number or TME Number. The DCO is open from 8 a.m. to 4 p.m., Monday through Friday, excluding legal holidays. The telephone number for the DCO is (202) 564–8930.

D. How Should I Submit CBI To the Agency?

Do not submit information that you consider to be CBI electronically through EPA's electronic public docket or by e-mail. You may claim information that you submit to EPA as CBI by marking any part or all of that information as CBI (if you submit CBI on disk or CD ROM, mark the outside of the disk or CD ROM as CBI and then identify electronically within the disk or CD ROM the specific information that is CBI). Information so marked will not be disclosed except in accordance with procedures set forth in 40 CFR part 2.

In addition to one complete version of the comment that includes any information claimed as CBI, a copy of the comment that does not contain the information claimed as CBI must be submitted for inclusion in the public docket and EPA's electronic public docket. If you submit the copy that does not contain CBI on disk or CD ROM, mark the outside of the disk or CD ROM clearly that it does not contain CBI. Information not marked as CBI will be included in the public docket and EPA's electronic public docket without prior notice. If you have any questions about CBI or the procedures for claiming CBI, please consult the technical person listed under **FOR FURTHER INFORMATION CONTACT**.

E. What Should I Consider as I Prepare My Comments for EPA?

You may find the following suggestions helpful for preparing your comments:

1. Explain your views as clearly as possible.

2. Describe any assumptions that you used.

3. Provide copies of any technical information and/or data you used that support your views.

4. If you estimate potential burden or costs, explain how you arrived at the estimate that you provide.

5. Provide specific examples to illustrate your concerns.

6. Offer alternative ways to improve the notice or collection activity.

7. Make sure to submit your comments by the deadline in this document.

8. To ensure proper receipt by EPA, be sure to identify the docket ID number assigned to this action and the specific PMN number you are commenting on in the subject line on the first page of your response. You may also provide the name, date, and **Federal Register** citation.

II. Why is EPA Taking this Action?

Section 5 of TSCA requires any person who intends to manufacture (defined by statute to include import) a new chemical (i.e., a chemical not on the TSCA Inventory to notify EPA and comply with the statutory provisions pertaining to the manufacture of new chemicals. Under sections 5(d)(2) and 5(d)(3) of TSCA, EPA is required to publish a notice of receipt of a PMN or an application for a TME and to publish periodic status reports on the chemicals under review and the receipt of notices of commencement to manufacture those chemicals. This status report, which covers the period from December 11, 2002 to December 26, 2002, consists of the PMNs pending or expired, and the notices of commencement to manufacture a new chemical that the Agency has received under TSCA section 5 during this time period.

III. Receipt and Status Report for PMNs

This status report identifies the PMNs pending or expired, and the notices of commencement to manufacture a new chemical that the Agency has received under TSCA section 5 during this time period. If you are interested in information that is not included in the following tables, you may contact EPA as described in Unit II. to access additional non-CBI information that may be available.

In Table I of this unit, EPA provides the following information (to the extent that such information is not claimed as CBI) on the PMNs received by EPA during this period: the EPA case number assigned to the PMN; the date the PMN was received by EPA; the projected end date for EPA's review of the PMN; the submitting manufacturer; the potential uses identified by the manufacturer in the PMN; and the chemical identity.

I. 59 PREMANUFACTURE NOTICES RECEIVED FROM: 12/11/02 TO 12/26/02

Case No.	Received Date	Projected Notice End Date	Manufacturer/Importer	Use	Chemical
P–03–0170	12/12/02	03/12/03	CBI	(G) Resin coating	(G) Methacrylated polyol
P–03–0171	12/12/02	03/12/03	CBI	(G) Polymer for waterborne paints	(G) Epoxy-acrylic graft copolymer
P–03–0172	12/12/02	03/12/03	CBI	(G) Radiation cured inks	(G) Polyester acrylate
P–03–0173	12/12/02	03/12/03	CBI	(G) 1st substance, generic name = polymer resin intermediate.	(G) Modified polycarbocycles, maleated
P–03–0174	12/12/02	03/12/03	CBI	(G) 2nd and 3rd substances, generic names = surfactant resin polymers.	(G) Modified polycarbocycles, maleated, ethoxylated
P–03–0175	12/12/02	03/12/03	CBI	(G) 2nd and 3rd substances, generic names = surfactant resin polymers.	(G) Modified polycarbocycles, maleated, ethoxylated, phosphates
P–03–0176	12/12/02	03/12/03	CBI	(G) Resin coating	(G) Urethane acrylate
P–03–0177	12/12/02	03/12/03	CBI	(G) Concrete additive	(G) Substituted hydroxyethylcellulose ethers
P–03–0178	12/12/02	03/12/03	CBI	(G) Textile colorant	(G) Substituted pyridinemethanesulfonic acid, [[[(sulfooxy)ethyl]sulfonyl]phenyl] [sulfophenyl], sodium salt
P–03–0180	12/13/02	03/13/03	Mitsui Chemicals America, Inc.	(S) Reagents for nucleic acid testing (on subject resulting from farm animals, crops, plants, foods, living entities other than humans)	(S) Cytidine, 2′-deoxy-, monohydrochloride
P–03–0181	12/13/02	03/13/03	CBI	(S) Wood floor coating; wood moulding coating; wood furniture coating	(G) Amino resin modified polyether polyurethane
P–03–0182	12/13/02	03/13/03	CBI	(G) Open, non-dispersive (resin)	(G) Polysulfonated dpo/diphone
P–03–0183	12/13/02	03/13/03	CBI	(G) Parts of automobile	(G) Methyl styrene acrylonitrile copolymer
P–03–0184	12/13/02	03/13/03	CBI	(G) Parts of automobile	(G) Methyl styrene acrylonitrile copolymer
P–03–0185	12/13/02	03/13/03	CBI	(G) 1. Inner parts of automobile; 2. Air spoiler of automobile	(G) Butadiene styrene polymer
P–03–0186	12/16/02	03/16/03	CBI	(G) Lubricant additive.	(G) Fatty acid amide
P–03–0187	12/16/02	03/16/03	CBI	(G) Polymer catalyst (contained use)	(G) Organometallic compound
P–03–0188	12/17/02	03/17/03	Meadwestvaco Corporation - Specialty Chemicals Division	(S) Asphalt emulsifier	(G) Fatty acids, tall-oil, reaction products with substituted ethyleneamines
P–03–0192	12/13/02	03/13/03	CBI	(G) Surfactant	(G) Mixed alkyl phosphate ester
P–03–0193	12/13/02	03/13/03	CBI	(G) Surfactant	(G) Mixed alkyl phosphate ester, potassium salt
P–03–0194	12/17/02	03/17/03	Vantico Corp.	(S) Resin for electronic laminates; adhesive resin; encapsulants resin; composites resin	(G) Bis[phenyl, 2h-1,3-benzoxazine] derivative

I. 59 PREMANUFACTURE NOTICES RECEIVED FROM: 12/11/02 TO 12/26/02—Continued

Case No.	Received Date	Projected Notice End Date	Manufacturer/Importer	Use	Chemical
P–03–0195	12/17/02	03/17/03	Arteva Specialties S.A.R.L. D/B/A Kosa	(G) Chemical intermediate and component of structural materials, destructive uses	(G) Aromatic acid ester
P–03–0196	12/17/02	03/17/03	CBI	(G) Additive for coatings, inks, adhesives and composites.	(G) Metallic diol
P–03–0197	12/18/02	03/18/03	Marubeni Specialty Chemicals, Inc.	(G) Surface active agent for emulsion polymerization	(G) Polyoxyethylene polyalkylarylphenylether sulfate ammonium salt
P–03–0198	12/18/02	03/18/03	CBI	(S) Site limited intermediate	(G) Fatty acid amide
P–03–0199	12/19/02	03/19/03	CBI	(G) Resin coating	(G) Polyurethane
P–03–0200	12/18/02	03/18/03	CBI	(G) Sealant	(S) 2-propenoic acid, 2-methyl-, C_{9-11}-isoalkyl esters, C_{10}-rich
P–03–0201	12/18/02	03/18/03	CBI	(G) Oil well additive	(G) Fatty acid amide ammonium chloride salts
P–03–0202	12/18/02	03/18/03	Reichhold, Inc.	(G) Coating	(G) Alkanediol homopolymer, polymer with polyether polyol and isocyanate.
P–03–0203	12/18/02	03/18/03	Reichhold, Inc.	(G) Coating	(G) Alkanediol homopolymer, polymer with polyether polyol and isocyanate.
P–03–0204	12/18/02	03/18/03	Reichhold, Inc.	(G) Coating	(G) Alkanediol homopolymer, polymer with polyether polyol and isocyanate.
P–03–0205	12/19/02	03/19/03	Meadwestvaco Corporation - Specialty Chemicals Division	(S) Asphalt emulsifier salt	(G) Fatty acids, tall-oil, reaction products with substituted ethyleneamines, hydrochlorides
P–03–0206	12/19/02	03/19/03	Meadwestvaco Corporation - Specialty Chemicals Division	(S) Asphalt emulsifier salt	(G) Fatty acids, tall-oil, reaction products with substituted ethylenamines, acetates
P–03–0207	12/19/02	03/19/03	Meadwestvaco Corporation - Specialty Chemicals Division	(S) Asphalt emulsifier salt	(G) Fatty acids, tall-oil, reaction products with substituted ethylenamines, phosphates
P–03–0208	12/19/02	03/19/03	CBI	(S) Additive in radiation cured coatings; additive in radiation cured inks; additive in unsaturated polyester composites; addtive in radiation cured adhesives	(G) Urethane acylate
P–03–0209	12/19/02	03/19/03	CBI	(G) Chemical intermediate	(G) Polyester polyol
P–03–0210	12/19/02	03/19/03	Solutia Inc	(S) Wetting agent for industrial coatings	(G) Urethane modified acrylic copolymer
P–03–0211	12/20/02	03/20/03	Powdertech International Corporation	(S) Coating resin of carrier particles for contrlling surface resistance of the particles for electrophotographic developer	(S) Siloxanes and silicones,methyl methoxy,polymers with methyl silsesquioxanes methoxy teiminated,reaction products with methyl ethyl ketone 0,0′,0″-(methylsilylidyne)trioxime and 2,4,6-trimethyl-2,4,6-tris(3,3,3-trifluoropropyl)cyclotrisiloxane
P–03–0212	12/20/02	03/20/03	Cognis Corporation	(S) Phase transfer catalyst	(S) Quaternary ammonium compounds, tri-8-10-alkylmethyl, sulfates (1:1)
P–03–0213	12/20/02	03/20/03	CBI	(G) Additive	(G) Modified polythioaminoketone
P–03–0214	12/20/02	03/20/03	CBI	(G) Laminating adhesive; open, non-dispersive use	(G) Polyurethane prepolymer; polurethane hot melt
P–03–0215	12/23/02	03/23/03	Mcp Metalspecialties, Inc.	(G) catalyst	(S) 4h-1,3,2-benzodioxabismin-4-one, 2-hydroxy-
P–03–0216	12/23/02	03/23/03	CBI	(G) Rheology modifier	(G) Acrylic copolymer
P–03–0217	12/23/02	03/23/03	CBI	(G) Chemical intermediate	(G) Polyester polyol
P–03–0218	12/23/02	03/23/03	CBI	(G) Petroleum additive	(G) Alkyl borate
P–03–0219	12/24/02	03/24/03	Solutia Inc	(S) Wetting agent for industrial coatings	(G) Urethane modified acrylic copolymer
P–03–0220	12/24/02	03/24/03	CBI	(G) Monomer for polymer	(G) Polycarbonate polyol
P–03–0221	12/24/02	03/24/03	CIBA Specialty Chemicals Corporation, Textile Effects	(S) Exhaust dyeing of polyester fibers	(G) Substituted isothiazole benzenamide derative
P–03–0222	12/26/02	03/26/03	CBI	(G) Surface treatment chemical	(G) Substituted phenolic resin
P–03–0223	12/26/02	03/26/03	CBI	(G) Surface treatment chemical	(G) Substituted phenolic resin
P–03–0224	12/26/02	03/26/03	CBI	(G) Surface treatment chemical	(G) Substituted phenolic resin
P–03–0225	12/26/02	03/26/03	CBI	(G) Surface treatment chemical	(G) Substituted phenolic resin

I. 59 PREMANUFACTURE NOTICES RECEIVED FROM: 12/11/02 TO 12/26/02—Continued

Case No.	Received Date	Projected Notice End Date	Manufacturer/Importer	Use	Chemical
P–03–0226	12/26/02	03/26/03	CBI	(G) Surface treatment chemical	(G) Substituted phenolic resin
P–03–0227	12/26/02	03/26/03	CBI	(G) Surface treatment chemical	(G) Substituted phenolic resin
P–03–0237	12/24/02	03/24/03	CBI	(G) Adhesives	(G) Polyurethane acrylate included polyester bone
P–03–0238	12/24/02	03/24/03	CBI	(G) Adhesives	(G) Acrylate of hydroxyimide
P–03–0243	12/24/02	03/24/03	CBI	(G) Polyurethane	(G) Polyol
P–03–0244	12/24/02	03/24/03	CBI	(G) Polyurethane	(G) Polyol
P–03–0245	12/24/02	03/24/03	CBI	(G) Polyurethane	(G) Polyol

In Table II of this unit, EPA provides the following information (to the extent that such information is not claimed as CBI) on the Notices of Commencement to manufacture received:

II. 40 NOTICES OF COMMENCEMENT FROM: 12/11/02 TO 12/26/02

Case No.	Received Date	Commencement/ Import Date	Chemical
P–00–0310	12/26/02	12/06/02	(G) Acrylic polyester resin
P–00–0328	12/26/02	11/18/02	(G) Maleic anhydride polyester
P–01–0166	12/26/02	12/17/02	(S) 5-hexen-1-ol
P–01–0208	12/24/02	12/12/02	(G) Polyester polycarbamate
P–01–0212	12/24/02	12/11/02	(G) Polyester polycarbamate
P–01–0774	12/20/02	11/22/02	(G) Unsaturated epoxy acrylate resin
P–02–0172	12/26/02	12/02/02	(G) Aromatic polyester polyol
P–02–0320	12/26/02	12/12/02	(G) Polymer of phenol and substituted benzenes
P–02–0328	12/19/02	11/26/02	(G) Acrylate copolymer
P–02–0374	12/24/02	12/11/02	(G) Chlorinated polyester
P–02–0495	12/18/02	12/10/02	(G) Branched alkyl ester
P–02–0551	12/19/02	11/25/02	(G) 1,5(naphthalenedisulfonic acid, substituted sulfopheny)azo)-1-naphthalenyl)amino)-substituted-piperazinyl)substituted naphthalenyl)azo)-, sodium salt
P–02–0668	12/19/02	12/06/02	(S) Siloxanes and silicones, di-me, polymers with ph silsesquioxanes, hydrolyzed, reaction products with trimethoxy[3-(oxiranylmethoxy)propyl]silane
P–02–0670	12/11/02	11/14/02	(S) Titanium, chlorotris(2-propanolato)-
P–02–0707	12/11/02	12/02/02	(G) Camphorsulfonate
P–02–0746	12/11/02	11/12/02	(G) Aromatic - aliphatic polyamide
P–02–0808	12/19/02	11/08/02	(G) Amine salt of iscyanate, polymer with polyester, vegetable oils, alkyleneamines, hydroxy substituted carboxylic acid and tetra hydroxy alkane
P–02–0821	12/20/02	12/15/02	(G) Polymer of (alkylene ether)glycol, methylene bis [isocyanatobenzene] and toluene diisocyanate
P–02–0841	12/11/02	11/01/02	(G) Brominated epoxy resin
P–02–0844	12/19/02	12/02/02	(G) Hydroxyfunctional acrylic copolymer
P–02–0864	12/19/02	11/18/02	(G) Fluoropolymeric sulfonic acid
P–02–0865	12/19/02	11/22/02	(G) Perfluoro alkoxy acid fluoride derivative
P–02–0870	12/19/02	11/17/02	(G) Perfluorinated difunctional acid fluoride
P–02–0876	12/23/02	12/15/02	(G) Pyridone
P–02–0886	12/11/02	12/09/02	(G) Imidazoline derivative, reaction products with polybasic acid
P–02–0888	12/20/02	12/12/02	(G) Ammonium amps homopolymer
P–02–0898	12/17/02	12/01/02	(G) Ester of acid modified hydrocarbon resin
P–02–0911	12/11/02	12/02/02	(G) Aromatic compound
P–02–0918	12/19/02	12/06/02	(G) Vegetable fatty acids, polymer with cyclic carboxylic acid and tetra hydroxy alkane.
P–02–0921	12/19/02	12/13/02	(G) Aliphatic polyester-polyether polyurethane
P–02–0929	12/23/02	11/26/02	(G) Disubstituted-phenyl-alkyl-heteromonocycle
P–02–0975	12/17/02	12/10/02	(G) Polyester resin
P–02–0979	12/19/02	12/11/02	(G) Epoxy modified polyvinyl butyral
P–02–0985	12/19/02	12/14/02	(G) Vegetable fatty acids, polymer with peroxide, alkyl acrylate, cyclic carboxlic acid, alkeneioc acid, tetra hydroxy alkane and alkenylbenzene.
P–02–0986	12/19/02	12/11/02	(G) Vegetable fatty acids, polymer with peroxide, alkyl acrylate, alkeneoic acid and alkenylbenzene.
P–02–0995	12/20/02	12/19/02	(G) Aminonitrile
P–02–1053	12/16/02	12/05/02	(G) Substituted acrylate polymer
P–96–1309	12/23/02	09/28/96	(G) 2-propenoic acid, half ester with fatty acid anhycloride
P–96–1619	12/17/02	12/13/02	(G) *N*,*N*,′-bis(fatty alkyl) -aromatic-di-urea
P–96–1620	12/17/02	12/13/02	(G) *N*,*N*,′-bis(fatty alkyl) -aromatic-di-urea

List of Subjects

Environmental protection, Chemicals, Premanufacturer notices.

Dated: January 23, 2003.

Sandra R. Wilkins,

Acting Director, Information Management Division, Office of Pollution Prevention and Toxics.

[FR Doc. 03–2170 Filed 1–29–03; 8:45 am]

BILLING CODE 6560–50–S

ENVIRONMENTAL PROTECTION AGENCY

[OPPT–2003–0005; FRL–7291–6]

Certain New Chemicals; Receipt and Status Information

AGENCY: Environmental Protection Agency (EPA).

ACTION: Notice.

SUMMARY: Section 5 of the Toxic Substances Control Act (TSCA) requires any person who intends to manufacture (defined by statute to include import) a new chemical (i.e., a chemical not on the TSCA Inventory) to notify EPA and comply with the statutory provisions pertaining to the manufacture of new chemicals. Under sections 5(d)(2) and 5(d)(3) of TSCA, EPA is required to publish a notice of receipt of a premanufacture notice (PMN) or an application for a test marketing exemption (TME), and to publish periodic status reports on the chemicals under review and the receipt of notices of commencement to manufacture those chemicals. This status report, which covers the period from December 27, 2002 to January 10, 2003, consists of the PMNs pending or expired, and the notices of commencement to manufacture a new chemical that the Agency has received under TSCA section 5 during this time period.

DATES: Comments identified by the docket ID number OPPT– 2003–2005 and the specific PMN number or TME number, must be received on or before March 3, 2003.

ADDRESSES: Comments may be submitted electronically, by mail, or through hand delivery/courier. Follow the detailed instructions as provided in Unit I. of the **SUPPLEMENTARY INFORMATION**.

FOR FURTHER INFORMATION CONTACT: Barbara Cunningham, Acting Director, Environmental Assistance Division, Office of Pollution Prevention and Toxics (7408M), Environmental Protection Agency, 1200 Pennsylvania Ave., NW., Washington, DC 20460–0001; telephone number: (202) 554–1404; e-mail address: *TSCA-Hotline@epa.gov*.

SUPPLEMENTARY INFORMATION:

I. General Information

A. Does this Action Apply to Me?

This action is directed to the public in general. As such, the Agency has not attempted to describe the specific entities that this action may apply to. Although others may be affected, this action applies directly to the submitter of the premanufacture notices addressed in the action. If you have any questions regarding the applicability of this action to a particular entity, consult the person listed under **FOR FURTHER INFORMATION CONTACT**.

B. How Can I Get Copies of This Document and Other Related Information?

1. *Docket.* EPA has established an official public docket for this action under docket identification (ID) number OPPT–2003–2005. The official public docket consists of the documents specifically referenced in this action, any public comments received, and other information related to this action. Although a part of the official docket, the public docket does not include Confidential Business Information (CBI) or other information whose disclosure is restricted by statute. The official public docket is the collection of materials that is available for public viewing at the EPA Docket Center, Rm. B102-Reading Room, EPA West, 1301 Constitution Ave., NW., Washington, DC. The EPA Docket Center is open from 8:30 a.m. to 4:30 p.m., Monday through Friday, excluding legal holidays. The EPA Docket Center Reading Room telephone number is (202) 566–1744 and the telephone number for the OPPT Docket, which is located in EPA Docket Center, is (202) 566–0280.

2. *Electronic access.* You may access this **Federal Register** document electronically through the EPA Internet under the ''**Federal Register**'' listings at *http://www.epa.gov/fedrgstr/*.

An electronic version of the public docket is available through EPA's electronic public docket and comment system, EPA Dockets. You may use EPA Dockets at *http://www.epa.gov/edocket/* to submit or view public comments, access the index listing of the contents of the official public docket, and to access those documents in the public docket that are available electronically. Although not all docket materials may be available electronically, you may still access any of the publicly available docket materials through the docket facility identified in Unit I.B.1. Once in the system, select ''search,'' then key in the appropriate docket ID number.

Certain types of information will not be placed in the EPA Dockets. Information claimed as CBI and other information whose disclosure is restricted by statute, which is not included in the official public docket, will not be available for public viewing in EPA's electronic public docket. EPA's policy is that copyrighted material will not be placed in EPA's electronic public docket but will be available only in printed, paper form in the official public docket. To the extent feasible, publicly available docket materials will be made available in EPA's electronic public docket. When a document is selected from the index list in EPA Dockets, the system will identify whether the document is available for viewing in EPA's electronic public docket. Although not all docket materials may be available electronically, you may still access any of the publicly available docket materials through the docket facility identified in Unit I.B.1. EPA intends to work towards providing electronic access to all of the publicly available docket materials through EPA's electronic public docket.

For public commenters, it is important to note that EPA's policy is that public comments, whether submitted electronically or in paper, will be made available for public viewing in EPA's electronic public docket as EPA receives them and without change, unless the comment contains copyrighted material, CBI, or other information whose disclosure is restricted by statute. When EPA identifies a comment containing copyrighted material, EPA will provide a reference to that material in the version of the comment that is placed in EPA's electronic public docket. The entire printed comment, including the copyrighted material, will be available in the public docket.

Public comments submitted on computer disks that are mailed or delivered to the docket will be transferred to EPA's electronic public docket. Public comments that are mailed or delivered to the docket will be scanned and placed in EPA's electronic public docket. Where practical, physical objects will be photographed, and the photograph will be placed in EPA's electronic public docket along with a brief description written by the docket staff.

C. How and To Whom Do I Submit Comments?

You may submit comments electronically, by mail, or through hand delivery/courier. To ensure proper

receipt by EPA, identify the appropriate docket ID number and specific PMN number or TME number in the subject line on the first page of your comment. Please ensure that your comments are submitted within the specified comment period. Comments received after the close of the comment period will be marked ''late.'' EPA is not required to consider these late comments. If you wish to submit CBI or information that is otherwise protected by statute, please follow the instructions in Unit I.D. Do not use EPA Dockets or e-mail to submit CBI or information protected by statute.

1. *Electronically*. If you submit an electronic comment as prescribed in this unit, EPA recommends that you include your name, mailing address, and an e-mail address or other contact information in the body of your comment. Also include this contact information on the outside of any disk or CD ROM you submit, and in any cover letter accompanying the disk or CD ROM. This ensures that you can be identified as the submitter of the comment and allows EPA to contact you in case EPA cannot read your comment due to technical difficulties or needs further information on the substance of your comment. EPA's policy is that EPA will not edit your comment, and any identifying or contact information provided in the body of a comment will be included as part of the comment that is placed in the official public docket, and made available in EPA's electronic public docket. If EPA cannot read your comment due to technical difficulties and cannot contact you for clarification, EPA may not be able to consider your comment.

i. *EPA Dockets*. Your use of EPA's electronic public docket to submit comments to EPA electronically is EPA's preferred method for receiving comments. Go directly to EPA Dockets at *http://www.epa.gov/edocket*, and follow the online instructions for submitting comments. Once in the system, select'' search,'' and then key in docket ID number OPPT–2003–2005. The system is an'' anonymous access'' system, which means EPA will not know your identity, e-mail address, or other contact information unless you provide it in the body of your comment.

ii. *E-mail*. Comments may be sent by e-mail to *oppt.ncic@epa.gov*, Attention: Docket ID Number OPPT–2003–2005 and PMN Number or TME Number. In contrast to EPA's electronic public docket, EPA's e-mail system is not an ''anonymous access'' system. If you send an e-mail comment directly to the docket without going through EPA's electronic public docket, EPA's e-mail system automatically captures your e-mail address. E-mail addresses that are automatically captured by EPA's e-mail system are included as part of the comment that is placed in the official public docket, and made available in EPA's electronic public docket.

iii. *Disk or CD ROM*. You may submit comments on a disk or CD ROM that you mail to the mailing address identified in Unit I.C.2. These electronic submissions will be accepted in WordPerfect or ASCII file format. Avoid the use of special characters and any form of encryption.

2. *By mail*. Send your comments to: Document Control Office (7407M), Office of Pollution Prevention and Toxics (OPPT), Environmental Protection Agency, 1200 Pennsylvania Ave., NW., Washington, DC 20460–0001.

3. *By hand delivery or courier*. Deliver your comments to: OPPT Document Control Office (DCO) in EPA East Building Rm. 6428, 1201 Constitution Ave., NW., Washington, DC. Attention: Docket ID Number OPPT–2003–2005 and PMN Number or TME Number. The DCO is open from 8 a.m. to 4 p.m., Monday through Friday, excluding legal holidays. The telephone number for the DCO is (202) 564–8930.

D. How Should I Submit CBI To the Agency?

Do not submit information that you consider to be CBI electronically through EPA's electronic public docket or by e-mail. You may claim information that you submit to EPA as CBI by marking any part or all of that information as CBI (if you submit CBI on disk or CD ROM, mark the outside of the disk or CD ROM as CBI and then identify electronically within the disk or CD ROM the specific information that is CBI). Information so marked will not be disclosed except in accordance with procedures set forth in 40 CFR part 2.

In addition to one complete version of the comment that includes any information claimed as CBI, a copy of the comment that does not contain the information claimed as CBI must be submitted for inclusion in the public docket and EPA's electronic public docket. If you submit the copy that does not contain CBI on disk or CD ROM, mark the outside of the disk or CD ROM clearly that it does not contain CBI. Information not marked as CBI will be included in the public docket and EPA's electronic public docket without prior notice. If you have any questions about CBI or the procedures for claiming CBI, please consult the technical person listed under **FOR FURTHER INFORMATION CONTACT**.

E. What Should I Consider as I Prepare My Comments for EPA?

You may find the following suggestions helpful for preparing your comments:

1. Explain your views as clearly as possible.
2. Describe any assumptions that you used.
3. Provide copies of any technical information and/or data you used that support your views.
4. If you estimate potential burden or costs, explain how you arrived at the estimate that you provide.
5. Provide specific examples to illustrate your concerns.
6. Offer alternative ways to improve the notice or collection activity.
7. Make sure to submit your comments by the deadline in this document.
8. To ensure proper receipt by EPA, be sure to identify the docket ID number assigned to this action and the specific PMN number you are commenting on in the subject line on the first page of your response. You may also provide the name, date, and **Federal Register** citation.

II. Why is EPA Taking this Action?

Section 5 of TSCA requires any person who intends to manufacture (defined by statute to include import) a new chemical (i.e., a chemical not on the TSCA Inventory to notify EPA and comply with the statutory provisions pertaining to the manufacture of new chemicals. Under sections 5(d)(2) and 5(d)(3) of TSCA, EPA is required to publish a notice of receipt of a PMN or an application for a TME and to publish periodic status reports on the chemicals under review and the receipt of notices of commencement to manufacture those chemicals. This status report, which covers the period from December 27, 2002 to January 10, 2003, consists of the PMNs pending or expired, and the notices of commencement to manufacture a new chemical that the Agency has received under TSCA section 5 during this time period.

III. Receipt and Status Report for PMNs

This status report identifies the PMNs pending or expired, and the notices of commencement to manufacture a new chemical that the Agency has received under TSCA section 5 during this time period. If you are interested in information that is not included in the following tables, you may contact EPA as described in Unit II. to access additional non-CBI information that may be available.

In Table I of this unit, EPA provides the following information (to the extent

that such information is not claimed as CBI) on the PMNs received by EPA during this period: the EPA case number assigned to the PMN; the date the PMN was received by EPA; the projected end date for EPA's review of the PMN; the submitting manufacturer; the potential uses identified by the manufacturer in the PMN; and the chemical identity.

I. 28 PREMANUFACTURE NOTICES RECEIVED FROM: 12/27/02 TO 01/10/03

Case No.	Received Date	Projected Notice End Date	Manufacturer/Importer	Use	Chemical
P–03–0228	12/27/02	03/27/03	BASF Corporation	(G) Industrial solvent	(G) Alkoxylated monobutyl ether
P–03–0229	12/27/02	03/27/03	CBI	(G) Open-non-dispersive uses	(G) Silylated polyurethane prepolymer
P–03–0230	12/27/02	03/27/03	CBI	(S) Polyurethane intermediate	(G) Urethane diol
P–03–0231	12/27/02	03/27/03	CBI	(S) Polyurethane coating	(G) Aqueous polyurethane dispersion
P–03–0232	12/27/02	03/27/03	Degussa Corporation	(S) Adhesion promoter; mineral filler treatment	(G) Alkylpolysiloxanes, aminoalkyl groups modified
P–03–0233	12/27/02	03/27/03	CBI	(G) Detergent for lubricant	(G) Calcium salt of a polyolefin substituted phenol
P–03–0234	12/27/02	03/27/03	CBI	(G) Intermediate for lubricant detergents	(G) Phenolic resin
P–03–0235	12/27/02	03/27/03	NA Industries, Inc.	(S) A binder resin for plastics coating	(G) 2-propenoic acid, 2-methyl-, methyl ester, polymer with alkyl 2-methyl-2-propenoate and alkyl 2-propenoate and ethenylbenzene
P–03–0236	12/30/02	03/30/03	NOF America Corp.	(S) Low temperature melting wax to be added to toner	(S) Tetradecanoic acid, 2-[[3-[(1-oxotetradecyl)oxy]-2,2-bis[[(1-oxotetradecyl)oxy] methyl]propoxy]methyl]-2-[[(1-oxotetradecyl)oxy] methyl]-1,3-propanediyl ester
P–03–0239	12/30/02	03/30/03	Degussa Corporation	(G) Contained use	(S) Benzenemethanol, titanium(4+) salt
P–03–0240	12/30/02	03/30/03	Degussa Corporation	(G) Contained use	(S) Cyclohexanol, titanium(4+) salt
P–03–0241	12/30/02	03/30/03	National Starch and Chemical	(G) Binder for non-wovens	(G) Vinyl acetate copolymer
P–03–0242	12/30/02	03/30/03	CBI	(G) Binder for adhesive	(G) Vinyl acetate copolymer
P–03–0246	12/31/02	03/31/03	Perstorp Polyols, Inc.	(S) Cross-linker for polyurethane foams and elastomers; starting material for acrylate oligomers used in ultraviolet-cure applications	(S) Poly(oxy-1,2-ethanediyl), alpha-hydro-.omega.-hydroxy-, ether with 2,2′-[oxybis(methylene)] bis[2-(hydroxymethyl)-1,3-propanediol] (6:1)
P–03–0247	12/31/02	03/31/03	BASF Corporation	(G) Intermediate in the production of amines.	(G) Aliphatic esters
P–03–0248	12/31/02	03/31/03	CBI	(G) Plastic film additive	(G) Glycerol fatty acid ester
P–03–0249	01/03/03	04/03/03	Henkel Adhesives	(S) Hot melt and molding adhesive	(S) Amines, C_{36}-alkylenedi-, polymers with ethylenediamine, 2-methyl-1,5-pentanediamine, piperazine, polypropylene glycol diamine and sebacic acid
P–03–0250	01/03/03	04/03/03	Henkel Adhesives	(S) Hot melt and molding adhesive	(S) Fatty acids, C_{18}-unsaturated, dimers, polymer with azelaic acid, ethylenediamine, piperazine and 4,4′(1,3-propanediyl)bis[piperidine]
P–03–0251	01/03/03	04/03/03	Henkel Adhesives	(S) Hot melt adhesive	(S) Fatty acids, C_{18}-unsaturated, dimers, polymers with ethylenediamine, 7-oxabicyclo[4.1.0]hept-3-ylmethyl 7-oxabicyclol[4.1.0]heptane-3-carboxylate, piperazine, polypropylene glycol diamine and sebacic acid
P–03–0252	01/06/03	04/06/03	CBI	(G) Open non-dispersive	(G) Mixed metal oxide
P–03–0253	01/07/03	04/07/03	CBI	(G) Binder resin	(G) Acrylic polyol
P–03–0254	01/07/03	04/07/03	CIBA Specialty Chemicals Corporation USA - additives	(S) Ultraviolet absorber for use in thermoplastics	(G) Triazine derivative
P–03–0255	01/08/03	04/08/03	CBI	(G) Epoxy dilvent for epoxy type coatings for metal surfaces. dispersive use.	(G) Phenol and vinyltolvene based hydrocarbon resin.
P–03–0256	01/08/03	04/08/03	CBI	(G) Intermediate for disponil surfactants	(G) Hydroxyalkylpolyglycolether
P–03–0257	01/09/03	04/09/03	The Sherwin Williams Company	(G) Open, non-dispersive	(G) Polyester polymer

I. 28 PREMANUFACTURE NOTICES RECEIVED FROM: 12/27/02 TO 01/10/03—Continued

Case No.	Received Date	Projected Notice End Date	Manufacturer/Importer	Use	Chemical
P–03–0258	01/09/03	04/09/03	Wacker Silicones, a Division of Wacker Chemical Corporation	(S) Additive for engine coolants	(S) 2,5-furandione, dihydro-3-[3-(triethoxysilyl)propyl]-
P–03–0259	01/10/03	04/10/03	CBI	(G) Open, non-dispersive (resin)	(G) Self-crosslinking acrylic polymer
P–03–0260	01/10/03	04/10/03	Sumitomo Chemical America, Inc.	(G) Encapsulation of electronic devices	(S) 1,3-benzenedimethanol, alpha, alpha, alpha′,alpha′-tetramethyl-polymer with phenol, glycidyl ethers

In Table II of this unit, EPA provides the following information (to the extent that such information is not claimed as CBI) on the Notices of Commencement to manufacture received:

II. 23 NOTICES OF COMMENCEMENT FROM: 12/27/02 TO 01/10/03

Case No.	Received Date	Commencement/ Import Date	Chemical
P–00–0817	12/31/02	12/18/02	(G) Silicon resin
P–02–0744	01/03/03	11/11/02	(G) Lithium salt of azo bridged acid
P–02–0809	12/27/02	11/16/02	(G) Polyester polymer
P–02–0818	01/07/03	12/19/02	(G) Isocyanate amine adduct
P–02–0829	01/08/03	11/30/02	(G) Molybdenum dithio carbamate
P–02–0836	01/08/03	11/13/02	(G) Polymer of: butyl methacrylate, ethylene glycol dimethacrylate, 2-hydroxypropyl methacrylate, divinylbenzene, ethylvinylbenzene
P–02–0837	01/08/03	11/13/02	(G) Polymer of: 2,3-epoxypropyl neodecanoate, cyclohexyl methacrylate, acrylic acid
P–02–0866	12/31/02	12/02/02	(G) Substituted anthraquinone
P–02–0867	12/31/02	12/16/02	(G) Substituted anthraquinone
P–02–0869	12/31/02	11/21/02	(G) Substituted anthraquinone
P–02–0928	12/31/02	12/10/02	(G) Substituted-phenyl-alkyl-heteropolycycle
P–02–0962	12/27/02	12/17/02	(G) Acryl based copolymer
P–02–1019	01/07/03	12/16/02	(G) Acrylic resin
P–98–1224	01/07/03	12/02/02	(G) Calprylic acid, compound with monoalicylamino-alcohol
P–98–1226	01/07/03	12/02/02	(G) Ethoxylated alcohol phosphate ester, compound with monoalkylamino-alcohol
P–98–1229	01/07/03	12/02/02	(G) Fatty acids, monomer, compound with monoalkylamino alcohol
P–98–1232	01/07/03	12/02/02	(G) 9-octadecenoic acid (7)-,sulfurized compound with monoalkylamino-alcohol
P–98–1234	01/07/03	12/02/02	(G) Boric acid, compound with monoalkylamino-alcohol
P–98–1236	01/07/03	12/02/02	(G) Fatty acid, tall-oil, compound with monoalkylamino-alcohol
P–98–1246	01/07/03	12/02/02	(G) Decanoic acid, compound with monoalkyl amino alcohol
P–98–1248	01/07/03	12/02/02	(G) Isooctadecanoic acid, compound with monoalkylamino-alcohol
P–99–0941	01/08/03	12/27/02	(G) Salt of an acrylic polymer
P–99–1398	01/02/03	12/09/02	(G) Quaternary ammonium compound

List of Subjects

Environmental protection, Chemicals, Premanufacturer notices.

Dated: January 23, 2003.

Sandra R. Wilkins,

Acting Director, Information Management Division, Office of Pollution Prevention and Toxics.

[FR Doc. 03–2171 Filed 1–29–03; 8:45 am]

BILLING CODE 6560–50–S

FEDERAL ELECTION COMMISSION

Sunshine Act Meeting

AGENCY: Federal Election Commission.

PREVIOUSLY ANNOUNCED DATE AND TIME: Tuesday, January 28, 2003, Meeting Closed to the Public.

This meeting has been cancelled.

DATE AND TIME: Tuesday, February 4, 2003 at 10 a.m.

PLACE: 999 E Street, NW., Washington, DC.

STATUS: This meeting will be closed to the public.

ITEMS TO BE DISCUSSED:

Compliance matters pursuant to 2 U.S.C. 437g.

Audits conducted pursuant to 2 U.S.C. 437g, § 438(b), and Title 26, U.S.C.

Matters concerning participation in civil actions or proceedings or arbitration.

Internal personnel rules and procedures or matters affecting a particular employee.

PERSON TO CONTACT FOR INFORMATION: Mr. Ron Harris, Press Officer, Telephone: (202) 694–1220.

Mary W. Dove,

Secretary of the Commission.

[FR Doc. 03–2297 Filed 1–28–03; 11:37 am]

BILLING CODE 6715–01–M

FEDERAL RESERVE SYSTEM

Formations of, Acquisitions by, and Mergers of Bank Holding Companies

The companies listed in this notice have applied to the Board for approval, pursuant to the Bank Holding Company Act of 1956 (12 U.S.C. 1841 *et seq.*) (BHC Act), Regulation Y (12 CFR Part 225), and all other applicable statutes and regulations to become a bank holding company and/or to acquire the assets or the ownership of, control of, or the power to vote shares of a bank or bank holding company and all of the banks and nonbanking companies owned by the bank holding company, including the companies listed below.

The applications listed below, as well as other related filings required by the Board, are available for immediate inspection at the Federal Reserve Bank indicated. The application also will be available for inspection at the offices of the Board of Governors. Interested persons may express their views in writing on the standards enumerated in the BHC Act (12 U.S.C. 1842(c)). If the proposal also involves the acquisition of a nonbanking company, the review also includes whether the acquisition of the nonbanking company complies with the standards in section 4 of the BHC Act (12 U.S.C. 1843). Unless otherwise noted, nonbanking activities will be conducted throughout the United States. Additional information on all bank holding companies may be obtained from the National Information Center Web site at *www.ffiec.gov/nic/*.

Unless otherwise noted, comments regarding each of these applications must be received at the Reserve Bank indicated or the offices of the Board of Governors not later than February 24, 2003.

A. Federal Reserve Bank of Kansas City (Susan Zubradt, Assistant Vice President) 925 Grand Avenue, Kansas City, Missouri 64198-0001:

1. Sundance State Bank Profit Sharing ESOP and Trust, Sundance Wyoming; to become a bank holding company by acquiring 28 percent of the voting shares of Sundance Bankshares, Inc., and Sundance State Bank, both of Sundance, Wyoming.

Board of Governors of the Federal Reserve System, January 24, 2003.

Jennifer J. Johnson,

Secretary of the Board.

[FR Doc. 03–2107 Filed 1–29–03; 8:45 am]

BILLING CODE 6210–01–S

DEPARTMENT OF HEALTH AND HUMAN SERVICES

Substance Abuse and Mental Health Services Administration

Agency Information Collection Activities: Proposed Collection; Comment Request

In compliance with Section 3506(c)(2)(A) of the Paperwork Reduction Act of 1995 concerning opportunity for public comment on proposed collections of information, the Substance Abuse and Mental Health Services Administration will publish periodic summaries of proposed projects. To request more information on the proposed projects or to obtain a copy of the information collection plans, call the SAMHSA Reports Clearance Officer on (301) 443–7978.

Comments are invited on: (a) Whether the proposed collections of information are necessary for the proper performance of the functions of the agency, including whether the information shall have practical utility; (b) the accuracy of the agency's estimate of the burden of the proposed collection of information; (c) ways to enhance the quality, utility, and clarity of the information to be collected; and (d) ways to minimize the burden of the collection of information on respondents, including through the use of automated collection techniques or other forms of information technology.

Proposed Project

Mandatory Guidelines for Federal Workplace Drug Testing Programs (0930–0158, revision)—SAMHSA will request renewal of OMB approval for the Federal Drug Testing Custody and Control Form for Federal agency and federally regulated drug testing programs which must comply with the HHS Mandatory Guidelines for Federal Workplace Drug Testing Programs (59 FR 29908) dated June 9, 1994, and for the information provided by laboratories for the National Laboratory Certification Program (NLCP).

The Federal Drug Testing Custody and Control Form is used by all Federal agencies and employers regulated by the Department of Transportation to document the collection and chain of custody of urine specimens at the collection site, for laboratories to report results, and for Medical Review Officers to make a determination. The Federal Drug Testing Custody and Control Form approved by OMB three years ago will be submitted for OMB approval without any revision.

Prior to an inspection, a laboratory is required to submit specific information regarding its laboratory procedures. A major change in the submitted information requires a laboratory to provide specific information on its specimen validity testing procedures. Since all certified laboratories are expected to have the capability to conduct specimen validity tests on regulated specimens, collecting this information prior to an inspection allows the inspectors to thoroughly review and understand the laboratory's specimen validity testing procedures before arriving at the laboratory.

The NLCP application form is being revised compared to the previous form. The major change in the NLCP application form includes, where appropriate in each section, a request for specific information on the applicant laboratory's ability to conduct specimen validity testing (*i.e.*, determining if a specimen is adulterated or substituted). Since all certified laboratories are expected to have the capability to conduct specimen validity tests on regulated specimens, it is necessary to ensure that each applicant laboratory has the same capability before being certified.

The annual total burden estimates for the Federal Drug Testing Custody and Control Form, the NLCP application, the NLCP inspection checklist, and NLCP recordkeeping requirements are shown in the following table.

Form/respondent	Burden/response (Hrs.)	Number of responses	Total annual burden (Hrs.)
Custody and Control Form:			
Donor	.08	7,096,000	567,680
Collector	.07	7,096,000	496,720
Laboratory	.05	7,096,000	354,800
Medical Review Officer	.05	7,096,000	354,800
Laboratory Application	3.00	3	9
Laboratory Inspection Checklist	3.00	110	330

Form/respondent	Burden/response (Hrs.)	Number of responses	Total annual burden (Hrs.)
Laboratory Recordkeeping	250.00	55	13,750
Total			1,788,089

Send comments to Nancy Pearce, SAMHSA Reports Clearance Officer, Room 16–105, Parklawn Building, 5600 Fishers Lane, Rockville, MD 20857. Written comments should be received within 60 days of this notice.

Dated: January 23, 2003.

Richard Kopanda,

Executive Officer, SAMHSA.

[FR Doc. 03–2154 Filed 1–29–03; 8:45 am]

BILLING CODE 4162–20–P

DEPARTMENT OF HEALTH AND HUMAN SERVICES

Food and Drug Administration

[Docket No. 02P–0494]

Medical Devices; Exemptions From Premarket Notification; Class II Devices

AGENCY: Food and Drug Administration, HHS.

ACTION: Notice.

SUMMARY: The Food and Drug Administration (FDA) is announcing that it has received a petition requesting exemption from the premarket notification requirements for a data acquisition unit for ceramic dental restoration systems. FDA is publishing this notice in order to obtain comments on this petition in accordance with procedures established by the Food and Drug Administration Modernization Act of 1997 (FDAMA).

DATES: Submit written or electronic comments by March 3, 2003.

ADDRESSES: Submit written comments to the Dockets Management Branch (HFA–305), Food and Drug Administration, 5630 Fishers Lane, rm. 1061, Rockville, MD 20852. Submit electronic comments to http://www.fda.gov/dockets/ecomments.

FOR FURTHER INFORMATION CONTACT: Heather S. Rosecrans, Center for Devices and Radiological Health (HFZ–404), Food and Drug Administration, 9200 Corporate Blvd., Rockville, MD 20850, 301–594–1190.

SUPPLEMENTARY INFORMATION:

I. Background

Under section 513 of the Federal Food, Drug, and Cosmetic Act (the act) (21 U.S.C. 360c), FDA must classify devices into one of three regulatory classes: Class I, class II, or class III. FDA classification of a device is determined by the amount of regulation necessary to provide a reasonable assurance of safety and effectiveness. Under the Medical Device Amendments of 1976 (the 1976 amendments) (Public Law 94–295), as amended by the Safe Medical Devices Act of 1990 (the SMDA) (Public Law 101–629), devices are to be classified into class I (general controls) if there is information showing that the general controls of the act are sufficient to assure safety and effectiveness; into class II (special controls), if general controls, by themselves, are insufficient to provide reasonable assurance of safety and effectiveness, but there is sufficient information to establish special controls to provide such assurance; and into class III (premarket approval), if there is insufficient information to support classifying a device into class I or class II and the device is a life-sustaining or life-supporting device or is for a use which is of substantial importance in preventing impairment of human health, or presents a potential unreasonable risk of illness or injury.

Most generic types of devices that were on the market before the date of the 1976 amendments (May 28, 1976) (generally referred to as preamendments devices) have been classified by FDA under the procedures set forth in section 513(c) and (d) of the act through the issuance of classification regulations into one of these three regulatory classes. Devices introduced into interstate commerce for the first time on or after May 28, 1976 (generally referred to as postamendments devices) are classified through the premarket notification process under section 510(k) of the act (21 U.S.C. 360(k)). Section 510(k) of the act and the implementing regulations, 21 CFR part 807, require persons who intend to market a new device to submit a premarket notification report containing information that allows FDA to determine whether the new device is ''substantially equivalent'' within the meaning of section 513(i) of the act to a legally marketed device that does not require premarket approval.

On November 21, 1997, the President signed into law FDAMA (Public Law 105–115). Section 206 of FDAMA, in part, added a new section 510(m) to the act. Section 510(m)(1) of the act requires FDA, within 60 days after enactment of FDAMA, to publish in the **Federal Register** a list of each type of class II device that does not require a report under section 510(k) of the act to provide reasonable assurance of safety and effectiveness. Section 510(m) of the act further provides that a 510(k) will no longer be required for these devices upon the date of publication of the list in the **Federal Register**. FDA published that list in the **Federal Register** of January 21, 1998 (63 FR 3142).

Section 510(m)(2) of the act provides that, 1 day after date of publication of the list under section 510(m)(1), FDA may exempt a device on its own initiative or upon petition of an interested person, if FDA determines that a 510(k) is not necessary to provide reasonable assurance of the safety and effectiveness of the device. This section requires FDA to publish in the **Federal Register** a notice of intent to exempt a device, or of the petition, and to provide a 30-day comment period. Within 120 days of publication of this document, FDA must publish in the **Federal Register** its final determination regarding the exemption of the device that was the subject of the notice. If FDA fails to respond to a petition under this section within 180 days of receiving it, the petition shall be deemed granted.

II. Criteria for Exemption

There are a number of factors FDA may consider to determine whether a 510(k) is necessary to provide reasonable assurance of the safety and effectiveness of a class II device. These factors are discussed in a guidance the agency issued on February 19, 1998, entitled ''Procedures for Class II Device Exemptions From Premarket Notification, Guidance for Industry and CDRH Staff.'' That guidance can be obtained through the Internet on the CDRH home page at http://www.fda.gov/cdrh or by facsimile through CDRH Facts-on-Demand at 1–800–899–0381 or 301–827–0111. Specify ''159'' when prompted for the document shelf number.

III. List of Petitions

FDA has received the following petition requesting an exemption from premarket notification for a class II device: Medical Device Consultants, Inc., on behalf of Sirona Dental Systems GmbH for data acquisition systems used in the computer aided design and milling of dental restorative prosthetic devices, classified under 21 CFR 872.3660, impression material.

IV. Comments

Interested persons may submit to the Dockets Management Branch (see **ADDRESSES**) written or electronic comments regarding this document. Submit a single copy of electronic comments to *http://www.fda.gov/dockets/ecomments* or two hard copies of any written comments, except that individuals may submit one hard copy. Comments are to be identified with the docket number found in brackets in the heading of this document. The petition and received comments may be seen in the Dockets Managment Branch between 9 a.m. and 4 p.m., Monday through Friday.

Dated: January 15, 2003.

Linda S. Kahan,

Deputy Director, Center for Devices and Radiological Health.

[FR Doc. 03–2112 Filed 1–29–03; 8:45 am]

BILLING CODE 4160–01–S

DEPARTMENT OF HEALTH AND HUMAN SERVICES

Food and Drug Administration

[Docket No. 02D–0018]

Draft Guidance for Industry on the Collection of Race and Ethnicity Data in Clinical Trials for FDA Regulated Products; Availability

AGENCY: Food and Drug Administration, HHS.

ACTION: Notice.

SUMMARY: The Food and Drug Administration (FDA) is announcing the availability of a draft guidance for industry entitled ''Collection of Race and Ethnicity Data in Clinical Trials for FDA Regulated Products.'' This draft guidance recommends a standardized approach for collecting race and ethnicity information in clinical trials conducted in the United States and abroad for certain FDA regulated products. The standardized approach being recommended was developed by the Office of Management and Budget (OMB).

DATES: Submit written or electronic comments on the draft guidance by March 31, 2003. General comments on agency guidance documents are welcome at any time.

ADDRESSES: Submit written requests for single copies of the draft guidance to the Division of Drug Information (HFD–240), Center for Drug Evaluation and Research, Food and Drug Administration, 5600 Fishers Lane, Rockville, MD 20857, or the Office of Communication, Training and Manufacturers Assistance (HFM–40), Center for Biologics Evaluation and Research, Food and Drug Administration, 1401 Rockville Pike, Rockville, MD 20852–1448. Send two self-addressed adhesive labels to assist that office in processing your requests. Submit written comments on the draft guidance to the Dockets Management Branch (HFA–305), Food and Drug Administration, 5630 Fishers Lane, rm. 1061, Rockville, MD 20852. Submit electronic comments to *http://www.fda.gov/dockets/ecomments*. See the **SUPPLEMENTARY INFORMATION** section for electronic access to the draft guidance document.

FOR FURTHER INFORMATION CONTACT:

Katherine Hollinger, Office of Health Science and Coordination (HF–8), Food and Drug Administration, 5600 Fishers Lane, Rockville, MD 20857, 301–594–5400; or

Nancy Derr, Center For Drug Evaluation and Research (HFD–5), Food and Drug Administration, 5600 Fishers Lane, Rockville, MD 20857, 301–594–5400; or

Ilan Irony, Center for Biologics Evaluation and Research (HFM–576), Food and Drug Administration, 1401 Rockville Pike, Rockville, MD 20852, 301–827–5378; or

IDE Staff, Center for Devices and Radiological Health (HFZ–403), 9200 Corporate Blvd., Rockville, MD 20850, 301–594–1190.

SUPPLEMENTARY INFORMATION:

I. Background

FDA is announcing the availability of a draft guidance for industry entitled ''Collection of Race and Ethnicity Data in Clinical Trials for FDA Regulated Products.'' FDA believes that the use of the OMB race and ethnicity categories will facilitate comparisons across clinical studies analyzed by FDA with data collected by other Federal agencies. Although FDA has long requested race and ethnicity data on subjects in certain clinical trials, the agency is now making recommendations on the categories to use when collecting and reporting the data.

In the final rule entitled ''Investigational New Drug Applications and New Drug Applications'' (demographic rule) (63 FR 6854, February 11, 1998), the agency recommended that sponsors ask subjects in certain clinical trials to identify their racial group and, if desired, to use the OMB categories when collecting race and ethnicity data.

The Department of Health and Human Services (HHS) issued a 1999 report entitled ''Improving the Collection and Use of Racial and Ethnic Data in HHS'' in which HHS announces the adoption of OMB Directive 15 as part of its policy on collecting and reporting data on race and ethnicity. HHS recommended methods for the collection and inclusion of racial and ethnic categories in HHS-funded and HHS-sponsored data collection and reporting systems in all HHS programs, including both health and social services. This HHS policy states that the categories in OMB Directive 15 and its revisions be used when collecting and reporting data in HHS data systems or reporting HHS-funded statistics. The HHS policy was developed to: (1) Help monitor HHS programs, (2) determine that Federal funds are being used in a nondiscriminatory manner, and (3) promote the availability of standard racial and ethnic data across various agencies to facilitate HHS responses to major health and human services issues.

Information on patient safety is reported by Federal agencies using the OMB recommendations. The application of OMB recommendations for the standardized collection and representation of race and ethnicity in clinical trial data is expected to enhance the comparability of data among clinical studies submitted to FDA and with reported health statistics. The recommendations made in this draft guidance are suggested for collecting race and ethnicity data in clinical trials developed to study pharmaceutical products and devices where necessary to determine safety and effectiveness. The agency recommends using more detailed race and ethnicity categories when appropriate to the study or locale, but recommends that the OMB categories be identified for all clinical trial participants when submitting data to the agency. In addition to asking for comments on this guidance generally, FDA specifically is asking for comments on the general applicability of this draft guidance to clinical trials of medical devices.

This draft guidance does not discuss increasing the number of studies in

which subpopulations are exposed to a product. The draft guidance also does not discuss increasing the total number of participants or members of a subpopulation in clinical trials.

This draft guidance contains information collection provisions that are subject to review by OMB under the Paperwork Reduction Act of 1995 (PRA) (44 U.S.C. 3501–3520). The collection of information in sections III and IV of this draft guidance are approved under OMB control number 0910–0014.

This level 1 draft guidance is being issued consistent with FDA's good guidance practices regulation (21 CFR 10.115). The draft guidance, when finalized, will represent the agency's current thinking on how to collect race and ethnicity data in certain clinical trials for FDA regulated products. It does not create or confer any rights for or on any person and does not operate to bind FDA or the public. An alternative approach may be used if such approach satisfies the requirements of the applicable statutes and regulations.

II. Comments

Interested persons may submit to the Dockets Management Branch (see **ADDRESSES**) written or electronic comments on the draft guidance. Two copies of any mailed comments are to be submitted, except that individuals may submit one copy. Comments are to be identified with the docket number found in brackets in the heading of this document. The draft guidance and received comments are available for public examination in the Dockets Management Branch between 9 a.m. and 4 p.m., Monday through Friday.

III. Electronic Access

Persons with access to the Internet may obtain the document at either *http://www.fda.gov/cder/guidance/index.htm*, *http://www.fda.gov/cber/guidelines.htm*, or *http://www.fda.gov/ohrms/dockets/default.htm*.

Dated: January 24, 2003.

Margaret M. Dotzel,

Assistant Commissioner fro Policy.

[FR Doc. 03–2162 Filed 1–29–03; 8:45 am]

BILLING CODE 4160–01–S

DEPARTMENT OF THE INTERIOR

Bureau of Land Management

[NM–090–03–9971–EK]

Conservation Helium Sales

AGENCY: Bureau of Land Management, Interior.

ACTION: Notice implementing first Conservation Helium sale.

SUMMARY: The purpose of this action is to implement the terms of the Helium Privatization Act (HPA) of 1996 dealing with the disposal of the Conservation Helium reserve. The Act requires the Department of the Interior *to offer for sale,* beginning no later than 2005, a portion of the Conservation Helium stored underground at the Cliffside Field north of Amarillo, Texas. The Department of the Interior in consultation with the private helium industry has determined that private companies with refining capacity along the crude helium pipeline will need a supply of helium in excess of that available from their own storage accounts and that available from crude helium extractors in the region, and that given the current market, Conservation Helium sold in this sale will likely minimize market disruption. The Bureau just concluded a 30-day comment period in which eight comments were received. The comments were generally supportive with mainly long-term concerns expressed. The Bureau made some minor modifications to address concerns expressed by those comments.

DATES: Submit bids and other documentation as required in notice on or before March 3, 2003.

ADDRESSES: You may submit your bids and other documentation as required in this notice to the Bureau of Land Management, Amarillo Field Office, 810 S. Fillmore, Suite 500, Amarillo, TX 79101, Attention: Crude Helium Sale.

FOR FURTHER INFORMATION CONTACT: Timothy R. Spisak, (806) 356–1002. Individuals who use a telecommunications device for the deaf (TDD) may call the Federal Information Relay Service (FIRS) at 1–800–877–8339 between 8 a.m. and 8 p.m., eastern time, Monday through Friday.

SUPPLEMENTARY INFORMATION:

1.01 What Is the Purpose of the Sale?

The purpose of this sale is to begin implementation of the terms of the Helium Privatization Act (HPA) of 1996 dealing with the disposal of the Conservation Helium reserve. The Act requires the Department of the Interior *to offer for sale,* beginning no later than 2005, a portion of the Conservation Helium stored underground at the Cliffside Field north of Amarillo, TX. The Department of the Interior in consultation with the private helium industry has determined that private companies with refining capacity along the crude helium pipeline will need a supply of helium in excess of that available from their own storage accounts and that available from crude helium extractors in the region. This is the first of 12 annual sales that the Department will conduct to dispose of the Conservation Helium stored underground at the Cliffside Field. The annual sales are being conducted in a manner intended to prevent pure helium market disruptions from occurring to end users; shortages of crude helium to pure helium refiners; and an oversupply of crude helium on the market for crude helium extractors. This first sale will be used to test the disposal process with subsequent sales adjusted as needed.

1.02 What Terms Do I Need To Know To Understand This Sale?

Allocated Sale—That portion of the annual sale volume of Conservation Helium that will be set aside for purchase by the crude helium refiners.

Annual Conservation Helium Sale—The sale of a certain volume of Conservation Helium to private entities conducted annually beginning no later than 2005.

Bidder—Any entity or person who submits a request for purchase of a volume of the annual Conservation Helium sale and has met the qualifications contained in part 1.05 in this notice.

BLM—The Bureau of Land Management.

Conservation Helium—The crude helium purchased by the U.S. Government under the authority of the Helium Act of 1960 and stored underground in the Cliffside Field.

Crude Helium—A partially refined gas containing about 70 percent helium and 30 percent nitrogen. However, the helium concentration may typically vary from 50 to 95 percent.

Crude Helium Refiners—Those entities with a capability of refining crude helium and having a connection point on the crude helium pipeline and a valid helium storage contract as of the date of a Conservation Helium sale.

Excess Volumes—Allocated sale volumes not requested by the crude helium refiners.

Helium Storage Contract— A contract between the BLM and a private entity allowing the private entity to store crude helium in underground storage at the Cliffside Field.

HPA— The Helium Privatization Act of 1996.

In-Kind Crude Helium— Conservation Helium purchased by private refiners in exchange for like amounts of pure helium sold to Federal agencies and

their contractors in accordance with the HPA.

MMcf— One million cubic feet of gas measured at standard conditions of 14.65 pounds per square inch (psi) and 60° F.

Mcf—One thousand cubic feet of gas measured at standard conditions of 14.65 psi and 60° F.

Non-allocated Sale— That portion of the annual sale volume of Conservation Helium that will be offered to all qualified bidders.

1.03 What Volume of Conservation Helium Will Be Offered in the Year 2003 Annual Conservation Helium Sale?

The volume of helium available for this sale is 2,100 MMcf. In accordance with the HPA, this volume was determined by dividing the total volume of stored Conservation Helium less the statutory required reservation of 600 MMcf for government purposes less estimated in-kind crude helium transfers for 12 years divided by 12.

1.04 At What Price Will the Conservation Helium Be Sold?

The Conservation Helium will be sold at the same price as in-kind crude helium. In accordance with the HPA, this price covers helium debt repayment and includes administrative and storage costs associated with the Conservation Helium. For Fiscal Year 2003, that price is $52.50 per Mcf.

1.05 Am I Qualified To Purchase Conservation Helium at This Sale?

Any person, firm, partnership, joint stock association, corporation, or other domestic or foreign organization operating partially or wholly within the United States who meets one or more of the following requirements is qualified to submit a purchase request:

- Operates a helium purification plant within the U.S., or
- Operates a crude helium extraction plant within the U.S., or
- Is a wholesaler of pure helium or purchases helium for resale within the U.S., or
- Is a consumer of pure helium within the U.S., or
- Has an agreement with a helium refiner to provide its helium processing needs, commonly referred to as a ''tolling agreement.''

All entities requesting participation in the Non-allocated Sale must submit proof of being qualified to purchase Conservation Helium and must either have a Helium Storage Contract with the BLM or have a third-party agreement in place with a valid storage contract holder so that all Conservation Helium sold to the Bidder will be properly covered by a Helium Storage Contract (including associated storage charges).

1.06 When Will the Conservation Helium Be Offered for Sale?

The BLM, Amarillo Field Office, will accept requests for purchase of Conservation Helium from final publication of this notice until March 3, 2003. On the next business day after this notice closes, requests to purchase Conservation Helium will be opened and evaluated. Thereafter, volumes of this Conservation Helium sale will be apportioned and allocated according to the sale rules described in this notice.

1.07 What Must I Do To Submit a Request for Purchase?

You must submit the following information to the BLM, Amarillo Field Office:

- Billing address information and name(s) of principle officers of the company.
- Proof of being an entity qualified to purchase Conservation Helium at this sale as defined in part 1.05 above. Documents such as invoices for sale or purchase of helium, helium storage contracts, or other relevant documents may be submitted as proof of qualification.
- The amount (in Mcf) of Conservation Helium requested.
- Certified check or money order in the amount of $1,000 made payable to the Bureau of Land Management. This money will be used to cover administrative expenses to conduct this sale and is nonrefundable.

1.08 Where Do I Send My Request for Purchase?

All requests for purchase of helium as part of this sale must be sent by certified mail to: Bureau of Land Management, Amarillo Field Office, 810 S. Fillmore, Suite 500, Amarillo, TX 79101, Attention: Crude Helium Sale.

1.09 When Do I Need To Submit Payment For Any Conservation Helium Sold To Me?

Successful purchasers will submit payments according to the following schedule: 25% by February 28, 2003, or 30 days after notification of the award volumes, whichever is later; 25% by April 30, 2003; 25% by June 30, 2003; 25% by September 30, 2003.

Conservation Helium will not be transferred to the purchaser's storage account until payment is received for that portion. Successful purchasers may, at their option, accelerate the purchase schedule.

1.10 To Whom Do I Make Payments for Awarded Conservation Helium Volumes?

Make checks payable to the Bureau of Land Management at the address listed in part 1.08 in this notice.

1.11 What Are the Penalties for Not Paying for the Conservation Helium in a Timely Manner?

If a payment is not received by the due date, the purchaser will forfeit the remainder of its allotment unless the purchaser can show that payment was late through no fault of its own. However, penalty interest will be assessed in accordance with the Debt Collection Act of 1982, 31 U.S.C. 951–953.

1.12 How Will I Know if I Have Been Successful in My Purchase Request?

Successful purchasers will be notified in writing by BLM no later than 2 weeks after the close of this notice with the awarded volumes and payment schedule.

Allocated Sale

2.01 What Is the Allocated Sale?

That portion of the annual sale volume of Conservation Helium that will be set aside for purchase by the crude helium refiners.

2.02 Who Will Be Allowed To Purchase Conservation Helium in the Allocated Sale?

Only those who meet the definition of crude helium refiners as defined in part 1.02 in this notice.

2.03 What Volume of Conservation Helium Is Available in the Allocated Sale?

The amount available will be 90 percent of the total volume of the annual Conservation Helium sale—1,890 MMcf.

2.04 How Will the Conservation Helium Be Apportioned Among the Refiners?

The apportionment to each crude helium refiner will be based on its percentage share (rounded to the nearest 1/10th of 1 percent) of the total refining capacity as of October 1, 2000, connected to the BLM crude helium pipeline.

2.05 What Will Happen if a Refiner or Refiners Request an Amount Other Than Their Share of What Is Offered for Sale?

- If one or more refiners request less than their allocated share, any other refiner(s) that requested more than their share will be allowed to purchase the

excess volume based on proportionate shares of remaining refining capacities.

• Requests by the Crude Helium Refiners that are in excess of the amount available above will be carried over to the Non-allocated Sale and considered a separate bid under the Non-allocated Sale rules.

2.06 What Will Happen if the Total Amount Requested by the Crude Helium Refiners Is Less Than the 1,890 MMcf Offered in the Allocated Sale?

Any excess volume not sold to the crude helium refiners will be added to the non-allocated sale volume.

2.07 Do You Have a Hypothetical Example of How an Allocated Sale Would Be Conducted?

2,100 MMcf available for total sale with 90 percent available for allocated sale (1,890 MMcf).

Bidder-allocated sale	Installed refining capacity (percent)	Refiner bid volume*	Allocated volume*	Excess volume requested*	Proration percent	Excess allocated*	Total allocated*	Carry over to non-allocated sale*
Refiner A	10	225	189	36	20	36	225	0
Refiner B	50	750	750	0	0	0	750	0
Refiner C	40	985	756	229	80	156 + 3	915	70
Total	100	1,960	1,695	265	100	195	1,890	0

*All volumes in MMcf.

After the initial allocation, Refiner B has received all requested. However, 265 MMcf is deemed excess of the total in the first iteration of the allocated sale and reallocated to the two remaining refiners based on the refining capacity between them. With the reallocation, Refiner A gets all requested, but Refiner C is still short by 73 MMcf. Additionally, 3 MMcf remains unallocated and without any other Refiners is awarded to Refiner C, who now has a remaining request of 70 MMcf that is posted into the non-allocated sale. All percentages used in the calculation will be rounded to the nearest 1/10th of 1 percent. All volumes calculated will be rounded to the nearest 1 Mcf.

Non-allocated Sale

3.01 What Is the Non-Allocated Sale?

That portion of the annual sale volume of conservation helium that will be offered to all qualified bidders.

3.02 What Is the Minimum Volume I Can Request?

The minimum request is 5 MMcf.

3.03 What Volume of Conservation Helium Is Available for the Non-allocated Sale?

The total volume of Conservation Helium available for this portion of the sale is 210 MMcf plus any additional helium that is not sold as part of the allocated sale.

3.04 How Is the Ratio of Allocated to Non-Allocated Sale Volumes Determined?

According to the terms of the HPA, the BLM must conduct the annual Conservation Helium sales in a manner not to cause undue helium market disruptions; and therefore, the majority of the Conservation Helium is being offered as part of the allocated sale. Currently, the crude helium refiners have refining capacity roughly double what can be supplied through the annual Conservation Helium sales. Although there are other crude helium supplies available to the crude helium refiners, these supplies are declining each year. The BLM must be sensitive to the crude helium refiners requirements while maintaining a balance with other helium industry requirements. The exact ratio of allocated to non-allocated sale volumes may change for subsequent annual Conservation Helium sales.

3.05 How Will the Non-Allocated Conservation Helium Be Apportioned Among the Bidders?

The Conservation Helium will be apportioned equally in 1 Mcf increments among the bidders with no prospective bidder receiving more than its request.

3.06 What Will Happen if the Bidders Request More Than What Is Made Available for Sale in Part 3.03 of This Notice?

• If one or more bidders request less than their apportioned amount, any other bidder(s) that requested more than its apportioned amount will be allowed to purchase equally apportioned amounts of the remaining volume available for this sale.

• If all bidders request more than their apportioned amount each bidder will receive its apportioned amount as determined in part 3.05 in this notice.

3.07 What Will Happen if a Bidder Requests Less Than Its Apportioned Amount?

Any bidder requesting less than the calculated apportioned volume, will receive the amount of its request and amounts remaining will be reapportioned in accordance with part 3.05 in this notice.

3.08 What Will Happen if the Total Requests From All Bidders Are Less Than That Offered for Sale in the Non-Allocated Sale?

If the total non-allocated volume requested is less than the non-allocated volume offered for this portion of the sale, the excess amount will not be sold and will be held in storage for future sales.

3.09 Do You Have a Hypothetical Example of How a Non-Allocated Sale Would Be Conducted?

2,100 MMcf available for total sale with 10 percent available for non-allocated sale (210 MMcf).

Bidder—non-allocated sale	Bid volume*	Apportioned volume*	Excess volume requested*	Proration percent	Excess apportioned*	Total apportioned*	Amount requested not received*
Refiner C	70	52.5	17.5	50	15	67.5	2.5
Company D	100	52.5	47.5	50	15	67.5	32.5

Bidder—non-allocated sale	Bid volume*	Apportioned volume*	Excess volume requested*	Proration percent	Excess apportioned*	Total apportioned*	Amount requested not received*
Company E	50	50	0	0	0	50	0
Company F	25	25	0	0	0	25	0
Total	245	180	65	100	30	210	35

* All volumes in MMcf.

In this example, three companies submit a request and there is a carryover amount from one of the crude helium refiners in the allocated sale that is considered as a separate request. Each bidder would be apportioned 52.5 MMcf, (*i.e.*, 210 MMcf of non-allocated Conservation Helium ÷ 4 bidders = 52.5 MMcf per bidder). After the initial allocation, Companies E and F have received all they requested. However, 30 MMcf is deemed excess in the first iteration of the non-allocated sale and reallocated to the two remaining bidders. With the reallocation, Refiner C and Company D each receives an additional 15 MMcf. No more helium is available, Refiner C and Company D do not receive all that they requested, and the sale is complete. All percentages used in the calculation will be rounded to the nearest 1/10th of 1 percent. All volumes calculated will be rounded to the nearest 1 Mcf.

Dated: December 13, 2002.

Timothy R. Spisak,

Acting State Director, New Mexico.

[FR Doc. 03–2048 Filed 1–29–03; 8:45 am]

BILLING CODE 4310–FB–P

DEPARTMENT OF THE INTERIOR

Bureau of Land Management

[AK–023–03–1310–PB–018L–241A]

National Petroleum Reserve—Alaska Research and Monitoring Advisory Team (RMT) Public Meeting

AGENCY: Northern Field Office, Bureau of Land Management, Interior.

ACTION: Notice of the National Petroleum Reserve—Alaska Research and Monitoring Advisory Team Public Meeting.

SUMMARY: A joint public meeting of the National Petroleum Reserve—Alaska Research and Monitoring Advisory Team and the NPR–A Subsistence Advisory Panel (SAP) will be held in Barrow, Alaska, on March 18–19, 2003, to discuss research and monitoring needs in the NPR–A and to make recommendations to the Authorized Officer on priority projects to be implemented by the BLM. This will also be the first joint meeting of the RMT and SAP as stipulated in the charter of the RMT.

DATES: The public meeting will be held at the Iñupiat Heritage Center in Barrow, Alaska, on March 18–19, 2003. A field trip to view a winter seismic operation is tentatively planned for March 20. Hours of the meeting have not yet been set. Please call the phone number below for a time update.

PUBLIC PARTICIPATION: This meeting is open to the public.

FOR FURTHER INFORMATION CONTACT: Additional information concerning the NPR–A Research and Monitoring Advisory Team may be obtained from Herb Brownell, Arctic Team Manager, BLM Northern Field Office, 1150 University Avenue, Fairbanks, Alaska 99709–3844. Mr. Brownell may be reached at (907) 474–2333 or at 1–800–437–7021, x2333, or at *Herb_Brownell@ak.blm.gov*.

SUPPLEMENTARY INFORMATION: The RMT's membership represents the BLM, Minerals Management Service, Department of Energy, U.S. Fish and Wildlife Service, U.S. Geological Survey—Biological Resources Division, the North Slope Borough, the oil and gas industry, environmental/resource conservation organizations, natural resource management/science academicians, and the public at large. The RMT advises the BLM in assessing the effectiveness and appropriateness of mitigative stipulations established in the Northeast NPR–A Integrated Activity Plan/Environmental Impact Statement, Record of Decision, 1998. The team focuses on assessing NPR–A research and monitoring needs, developing and recommending research priorities, and applying improved technology and operating practices to oil and gas exploration and development in the NPR–A.

The Subsistence Advisory Panel advises the BLM on how subsistence resources, uses, and users may be impacted by oil and gas exploration and development in the NPR–A.

Dated: January 23, 2003.

Robert W. Schneider,

Field Manager, Northern Field Office, Bureau of Land Management.

[FR Doc. 03–2153 Filed 1–29–03; 8:45 am]

BILLING CODE 4310–JA–P

DEPARTMENT OF THE INTERIOR

Minerals Management Service

Agency Information Collection Activities: Proposed Collection; Comment Request

AGENCY: Minerals Management Service (MMS), Interior.

ACTION: Notice of extension of an information collection (1010–0128).

SUMMARY: To comply with the Paperwork Reduction Act of 1995 (PRA), we are inviting comments on a collection of information that we will submit to the Office of Management and Budget (OMB) for review and approval. The information collection request (ICR) concerns the paperwork requirements in the regulations under 30 CFR 250, Subpart O, ''Well Control and Production Safety Training.''

DATES: Submit written comments by March 31, 2003.

ADDRESSES: Mail or hand carry comments to the Department of the Interior; Minerals Management Service; Attention: Rules Processing Team; Mail Stop 4024; 381 Elden Street; Herndon, Virginia 20170–4817. If you wish to e-mail comments, the address is: *rules.comments@mms.gov*. Reference ''Information Collection 1010–0128'' in your e-mail subject line and mark your message for return receipt. Include your name and return address in your message.

FOR FURTHER INFORMATION CONTACT: Arlene Bajusz, Rules Processing Team, (703) 787–1600. You may also contact Arlene Bajusz to obtain a copy, at no cost, of the regulations that require the subject collection of information.

SUPPLEMENTARY INFORMATION:

Title: 30 CFR 250, Subpart O, Well Control and Production Safety Training.

OMB Control Number: 1010–0128.

Abstract: The Outer Continental Shelf (OCS) Lands Act, as amended (43 U.S.C. 1331 *et seq.* and 43 U.S.C. 1801 *et seq.*), authorizes the Secretary of the Interior (Secretary) to prescribe rules and regulations to administer leasing of the OCS. Such rules and regulations will apply to all operations conducted under a lease. Operations on the OCS must preserve, protect, and develop oil and natural gas resources in a manner that is consistent with the need to make such resources available to meet the Nation's energy needs as rapidly as possible; to balance orderly energy resource development with protection of human, marine, and coastal environments; to ensure the public a fair and equitable return on the resources of the OCS; and to preserve and maintain free enterprise competition.

Section 1332(6) of the OCS Lands Act (43 U.S.C. 1332) requires that ''operations in the [O]uter Continental Shelf should be conducted in a safe manner by well trained personnel using technology, precautions, and other techniques sufficient to prevent or minimize the likelihood of blowouts, loss of well control, fires, spillages, physical obstructions to other users of the waters or subsoil and seabed, or other occurrences which may cause damage to the environment or to property or endanger life or health.'' This authority and responsibility are among those delegated to the Minerals Management Service (MMS). To carry out these responsibilities, MMS issues regulations governing oil and gas or sulphur operations in the OCS.

Regulations at 30 CFR 250, subpart O, implement these safe operation requirements. The MMS uses the information collected under subpart O to ensure that workers in the OCS are properly trained with the necessary skills to perform their jobs in a safe and pollution-free manner. In some instances, MMS will conduct oral interviews of offshore employees to evaluate the effectiveness of a company's training program. The information collected is necessary to verify personnel training compliance with the requirements.

We will protect information from respondents considered proprietary under the Freedom of Information Act (5 U.S.C. 552) and its implementing regulations (43 CFR part 2) and under regulations at 30 CFR parts 250, 251, and 252. No items of a sensitive nature are collected. Responses are mandatory or required to obtain or retain a benefit.

Frequency: Primarily on occasion or annual.

Estimated Number and Description of Respondents: Approximately 130 Federal OCS lessees.

Estimated Reporting and Recordkeeping ''Hour'' Burden: The currently approved annual reporting burden for this collection is 5,739 hours. The following chart details the individual components and respective hour burden estimates of this ICR. In calculating the burdens, we assumed that respondents perform certain requirements in the normal course of their activities. We consider these to be usual and customary and took that into account in estimating the burden.

BURDEN BREAKDOWN

Citation 30 CFR 250 subpart O	Reporting and recordkeeping requirement	Hour burden
1502	Notify MMS of early implementation of revised final regulations	1
1503(b), (c)	Develop training plans	60
1503(c)	Maintain copies of training plan and employee training documentation for 5 years	plan = 15 min. employee record = 5 min.
1503(c)	Upon request, provide MMS copies of employee training documentation or provide copy of training plan.	5
1507(b)	Employee oral interview conducted by MMS	10 min.
1507(c), (d); 1508; 1509	Written testing conducted by MMS or authorized representative. [Exempt under 5 CFR 1320.3(h)(7).]	
1510(b)	Revise training plan and submit to MMS	4
1500–1510	General departure or alternative compliance requests not specifically covered elsewhere in subpart O.	2

Estimated Reporting and Recordkeeping ''Non-Hour Cost'' Burden: We have identified no cost burdens for this collection.

Public Disclosure Statement: The PRA (44 U.S.C. 3501, *et seq.*) provides that an agency may not conduct or sponsor a collection of information unless it displays a currently valid OMB control number. Until OMB approves a collection of information, you are not obligated to respond.

Comments: Before submitting an ICR to OMB, PRA section 3506(c)(2)(A) requires each agency ''* * * to provide notice * * * and otherwise consult with members of the public and affected agencies concerning each proposed collection of information * * *''. Agencies must specifically solicit comments to: (a) Evaluate whether the proposed collection of information is necessary for the agency to perform its duties, including whether the information is useful; (b) evaluate the accuracy of the agency's estimate of the burden of the proposed collection of information; (c) enhance the quality, usefulness, and clarity of the information to be collected; and (d) minimize the burden on the respondents, including the use of automated collection techniques or other forms of information technology.

Agencies must also estimate the ''non-hour cost'' burdens to respondents or recordkeepers resulting from the collection of information. Therefore, if you have costs to generate, maintain, and disclose this information, you should comment and provide your total capital and startup cost components or annual operation, maintenance, and purchase of service components. You should describe the methods you use to estimate major cost factors, including system and technology acquisition, expected useful life of capital equipment, discount rate(s), and the period over which you incur costs. Capital and startup costs include, among other items, computers and software you purchase to prepare for collecting information, monitoring, and record storage facilities. You should not include estimates for equipment or services purchased: (i) Before October 1, 1995; (ii) to comply with requirements not associated with the information collection; (iii) for reasons other than to provide information or keep records for the Government; or (iv) as part of customary and usual business or private practices.

We will summarize written responses to this notice and address them in our submission for OMB approval. As a result of your comments, we will make

any necessary adjustments to the burden in our submission to OMB.

Public Comment Policy: Our practice is to make comments, including names and home addresses of respondents, available for public review during regular business hours. Individual respondents may request that we withhold their home address from the record, which we will honor to the extent allowable by law. There may be circumstances in which we would withhold from the record a respondent's identity, as allowable by the law. If you wish us to withhold your name and/or address, you must state this prominently at the beginning of your comment. However, we will not consider anonymous comments. We will make all submissions from organizations or businesses, and from individuals identifying themselves as representatives or officials of organizations or businesses, available for public inspection in their entirety.

MMS Information Collection Clearance Officer: Jo Ann Lauterbach, (202) 208–7744.

Dated: January 22, 2003.

E.P. Danenberger,

Chief, Engineering and Operations Division.

[FR Doc. 03–2145 Filed 1–29–03; 8:45 am]

BILLING CODE 4310–MR–P

DEPARTMENT OF THE INTERIOR

National Park Service

Notice of Availability of a Supplemental Draft Environmental Impact Statement

AGENCY: National Park Service, Interior.

ACTION: Notice of availability of a Supplemental Draft Environmental Impact Statement for the General Management Plan for Big South Fork National River and Recreation Area, Kentucky and Tennessee.

SUMMARY: Pursuant to section 102(2)(c) of the National Environmental Policy Act of 1969 and National Park Service policy in Director's Order Number 2 (Park Planning) and Director's Order Number 12 (Conservation Planning, Environmental Impact Analysis, and Decision-making) the National Park Service announces the availability of a Supplemental Draft Environmental Impact Statement and General Management Plan (SDEIS/GMP) for Big South Fork National River and Recreation Area (NRRA), Kentucky and Tennessee.

The SDEIS/GMP analyzes three action alternatives and one no-action alternative for guiding management of the park over the next 15 to 20 years. The three action alternatives incorporate various management prescriptions to ensure resource protection and quality visitor experience conditions. The no-action alternative would continue current management practices and policies.

DATES: The comment period will extend until April 30, 2003. A series of public meetings will be held in surrounding communities during this period. Dates, times, and locations of the meetings will be announced in the local media, posted on the internet at *http://www.nps.gov/biso/gmp,* and the park may be contacted for this information. Representatives of the National Park Service will be available at the public meetings to receive comments, concerns, and other input from the public related to the SDEIS/GMP.

ADDRESSES: Limited numbers of copies of the SDEIS/GMP are available from the Superintendent, Big South Fork NRRA, 4564 Leatherwood Ford Road, Oneida, TN 37841. Public reading copies of the SDEIS/GMP will also be available for review at the following locations, including others to be announced:

- Office of the Superintendent, Big South Fork NRRA, 4564 Leatherwood Ford Road, Oneida, TN 37841. Telephone: (423) 569–9778.
- Division of Planning and Compliance, Southeast Regional Office, National Park Service, Attention: John Fischer, 100 Alabama Street, 1924 Building, Atlanta, Georgia 30303. Telephone: (404) 562–3124, ext. 607.
- An electronic copy of the SDEIS/GMP is available for download in .pdf format on the internet at *http://www.nps.gov/biso/gmp.*

FOR FURTHER INFORMATION CONTACT: Superintendent, Big South Fork NRRA, 4564 Leatherwood Ford Road, Oneida, TN 37841. Telephone: (423) 562–9778.

SUPPLEMENTARY INFORMATION: This Supplemental Draft Environmental Impact Statement/General Management Plan is being distributed for public review based on comments received on the initial draft document. Those comments indicated that additional information was needed to allow for more meaningful public participation in the area's management planning. This led to more data collection and the development of a new alternative.

This plan examines and reaffirms Congress' purpose and direction for the National Area. It identifies the management requirements placed on the National Area as a unit of the national park system. The plan then considers different alternatives for managing the National Area along with an environmental evaluation of the alternatives. A no-action alternative is included for comparison. Development sites, roads, and trails within the National Area are examined.

In addition to Alternatives A and B identified in the previous draft, a new, more detailed alternative is presented in this supplemental document. This new alternative, Alternative D, is the NPS' preferred alternative. More localized areas are identified for different zone types, with particularized management prescriptions. A greater degree of guidance for resource management and visitor use is achieved. This is augmented with information, proposals, and alternatives for development of facilities, including roads and trails. Many existing facilities are reaffirmed as appropriate for inclusion in an official system; a number of new facilities are proposed to fill gaps and to provide for areas more recently acquired; and some existing facilities would be removed. Overall, the scale of development and types of facilities proposed over the planning horizon of 15 to 20 years would remain essentially the same. Special provisions are proposed for hunting access and for off-road vehicles. All routes proposed for use by off-road vehicles would be designated, according to Executive Order.

Special projects including management of oil and gas activities, reclamation of contaminated mine drainage, native species management, cultural landscape identification and management, and increased monitoring would be continued or initiated. Interpretation of National Area resources would be increased and more focused through completion of comprehensive interpretive planning.

Dated: November 15, 2002.

Patricia A. Hooks,

Acting Regional Director, Southeast Region.

[FR Doc. 03–2086 Filed 1–29–03; 8:45 am]

BILLING CODE 4310–70–P

DEPARTMENT OF THE INTERIOR

National Park Service

Acadia National Park, Bar Harbor, Maine; Acadia National Park Advisory Commission; Notice of Meeting

Notice is hereby given in accordance with the Federal Advisory Committee Act (Public Law 92–463, 86 Stat. 770, 5 U.S.C. App. 1, sec. 10), that the Acadia National Park Advisory Commission will hold a meeting on Monday, February 3, 2003.

The Commission was established pursuant to Public Law 99–420, sec.

103. The purpose of the commission is to consult with the Secretary of the Interior, or his designee, on matters relating to the management and development of the park, including but not limited to the acquisition of lands and interests in lands (including conservation easements on islands) and termination of rights of use and occupancy.

The meeting will convene at park Headquarters, McFarland Hill, Bar Harbor, Maine, at 1 p.m. to consider the following agenda:

1. Review and approval of minutes from the meeting held September 9, 2002.
2. Committee reports:

—Land Conservation,
—Park Use,
—Science.

3. Old business.
4. Superintendent's report.
5. Public comments.
6. Proposed agenda for next Commission meeting, September 9, 2002.

The meeting is open to the public. Interested persons may make oral/written presentations to the Commission or file written statements. Such requests should be made to the Superintendent at least seven days prior to the meeting.

Further information concerning this meeting may be obtained from the Superintendent, Acadia National Park, P.O. Box 177, Bar Harbor, Maine 04609, tel: (207) 288–3338.

Dated: January 3, 2003.

Len Bobinchock,

Acting Superintendent, Acadia National Park.

[FR Doc. 03–2089 Filed 1–29–03; 8:45 am]

BILLING CODE 4310–70–P

DEPARTMENT OF THE INTERIOR

National Park Service

Gettysburg National Military Park Advisory Commission

AGENCY: National Park Service, Interior.

ACTION: Notice of February 20, 2003 meeting.

SUMMARY: This notice sets forth the date of the February 20, 2003 meeting of the Gettysburg National Military Park Advisory Commission.

DATES: The public meeting will be held on February 20, 2003 from 7 p.m. to 9 p.m.

LOCATION: The meeting will be held at the Cyclorama Auditorium, 125 Taneytown Road, Gettysburg, Pennsylvania 17325.

AGENDA: The February 20, 2003 meeting will consist of the Sub-Committee Reports from the Historical, Executive, and Interpretive Committees; Federal Consistency Reports Within the Gettysburg Battlefield Historic District; Operational Updates on Park Activities which consists of an update on Gettysburg National Battlefield Museum Foundation and National Park Service activities related to the new Visitor Center/Museum Complex, update on the 5-year plan for the Historic Landscape Rehabilitation; updating the schedule of repairs on the Pennsylvania Monument; Construction Updates such as the fire suppression project for 50 historic structures; the Gettysburg Borough Interpretive Plan which will consist of updates on the Wills House and the Train Station; Transportation which consists of the National Park Service and the Gettysburg Borough working on the shuttle system; Update on land acquisition within the park boundary or in the historic district; and the Citizens Open Forum where the public can make comments and ask questions on any park activity.

FOR FURTHER INFORMATION CONTACT: John A. Latschar, Superintendent, Gettysburg National Military Park, 97 Taneytown Road, Gettysburg, Pennsylvania 17325,

SUPPLEMENTARY INFORMATION: The meeting will be open to the public. Any member of the public may file with the Commission a written statement concerning agenda items. The statement should be addressed to the Gettysburg National Military Park Advisory Commission, 97 Taneytown Road, Gettysburg, Pennsylvania 17325.

Dated: January 9, 2003.

John A. Latschar,

Superintendent, Gettysburg NMP/Eisenhower NHS.

[FR Doc. 03–2087 Filed 1–29–03; 8:45 am]

BILLING CODE 4310–70–P

DEPARTMENT OF INTERIOR

National Park Service

Notice of Realty Action Proposed Exchange of Interest in Federally-Owned Lands for Privately-Owned Lands Both Within Smyth County, VA

AGENCY: National Park Service, Interior.

ACTION: Notice of realty action for proposed land exchange.

SUMMARY: The following described interests in federally-owned lands acquired by the National Park Service have been determined to be suitable for disposal by exchange. The authority for this exchange is section 5(b) of the Land and Water Conservation Fund Act Amendments in Pub. L. 90–401, approved July 15, 1968, and section 7(f) of the National Trails System Act, Pub. L. 90–543, as amended.

DATES: Comments on this proposed land exchange will be accepted through March 17, 2003.

ADDRESSES: Detailed information concerning this exchange including precise legal descriptions, Land Protection Plan, environmental assessment, and cultural reports, and Finding of No Significant Impact are available at the National Trails Land Resources Program Center, 1314 Edwin Miller Boulevard, PO Box 908, Martinsburg, West Virginia 25402. Comments may also be mailed to this address.

FOR FURTHER INFORMATION CONTACT: Judy L. Brumback, Chief, Acquisition Division, National Park Service, National Trails Land Resources Program Center, PO Box 908, Martinsburg, West Virginia 25402–0908. Phone: (304) 263–4943.

SUPPLEMENTARY INFORMATION: The selected interest in Federal land is within the boundaries of the Appalachian National Scenic Trail. The land has been surveyed for cultural resources and endangered and threatened species. These reports are available upon request.

Permanent and temporary easements, in varying widths from 168.45′ to 15.62′, providing the right to construct, install and maintain a natural gas pipeline are to be exchanged on this federally owned property. Tract 514–50, (permanent easement) consisting of Parcel A, with 0.27 of an acre, more or less, which occupies a portion of the land acquired by the United States of America from Ronald H. Cumbow, *et al.*, by deed recorded in Smyth County; Deed Book 383, Page 709 (Tract 514–12) and Parcel B, with 0.82 of an acre, more or less, which occupies a portion of the land acquired by the United States of America from J. W. Cumbow, *et ux.,* by deed recorded in Smyth County in Deed Book 427, Page 730 (Tract 514–37). Tract 514–51, (temporary easement, not to exceed 18 months) consisting of Parcel A, with 0.16 of an acre, more or less, which occupies a portion of the land acquired by the United States of America from Ronald H. Cumbow, *et al.*, by deed recorded in Smyth County; Deed Book 383, Page 709 (Tract 514–12); Parcel B, with 0.64 of an acre, more or less, which occupies a portion of the same land acquired by the United States of America from Lucille L. Davis, *et vir.,* by deed recorded in Smyth County in Deed Book 409, page 159 (Tract 514–

33); Parcel C, with 0.09 of an acre, more or less, which occupies a portion of the same land acquired by the United States of America from J. W. Cumbow, *et ux.,* by deed recorded in Smyth County in Deed Book 427, Page 730 (Tract 514–37) and Parcel D, with 1.69 acres, more or less, which occupies a portion of the same land acquired by the United States of America from J. W. Cumbow, *et ux.,* by deed recorded in Smyth County in Deed Book 427, Page 730 (Tract 514–37).

Conveyance of the interest in land by the United States of America will be done by a Grant of Easement without warranty and will include easements terms to ensure that impact of construction and operation of the pipeline are minimized. Once construction and installation has been completed, the company will restore the disturbed property and carry out other reclamation and mitigation measures to further minimize impacts to the environment.

In exchange for the land described in Paragraph I above, the United States of America will acquire the fee interest in Tract 514–52, containing 1.13 acres, more or less and an easement over Tract 514–53, Parcels A and Parcel B, containing in the aggregate .82 of an acre, more or less, to be acquired by East Tennessee Natural Gas Pipeline Company. The Appalachian Trail footpath is located approximately 200 feet from this property. Acquisition of the fee and easement interests will provide additional protection for the footpath by protecting the resources. This land will be administered by the National Park Service as a part of the Appalachian National Scenic Trail upon completion of the exchange. This exchange of real property will provide permanent protection for the Appalachian Trail.

The land to be acquired by the United States of America is described as follows: Tract 514–52, the fee interest in 1.13 acres, more or less and Tract 514–53, a easement interest over 0.82 of an acre, more or less, acquired by East Tennessee Natural Gas Pipeline Company from Ron C. Reedy. The property is a portion of the lands acquired by Ron C. Reedy from J. W. Cumbow, *et ux.,* recorded in Deed Book 453, Page 508, in the Clerk's Office of the Circuit Court of Smyth County, Commonwealth of Virginia.

Conveyance of the fee simple title and easement to the United States will be done by a General Warranty Deed.

The value of the properties exchanged shall be determined by a current fair market value appraisal. If the value of Tracts 514–50/51 exceeds the value of Tract 514–52/53, East Tennessee Natural Gas Pipeline Company shall make an equalization payment to the United States. If the value of Tracts 514–52/53 exceeds the value of Tract 514–50/51, East Tennessee Natural Gas Pipeline Company will donate the excess value to the United States.

Interested parties may submit written comments to the address listed in the **ADDRESSES,** paragraph. Adverse comments will be evaluated and this action may be modified or vacated accordingly. In the absence of any action to modify or vacate, this realty action will become the final determination of the Department of Interior.

Dated: November 22, 2002.

Pamela Underhill,

Park Manager, Appalachian National Scenic Trail.

[FR Doc. 03–2088 Filed 1–29–03; 8:45 am]

BILLING CODE 4310–70–P

DEPARTMENT OF THE INTERIOR

Closure Order Establishing Prohibitions at Nimbus Dam and Power Plant, CA

AGENCY: Bureau of Reclamation.

ACTION: Notice of closure.

SUMMARY: The Bureau of Reclamation is prohibiting public access to Nimbus Dam and power plant. The prohibition (closure) area consists of the entire dam and power plant structure; the fenced in area at each end of and immediately adjacent to the structure; lands and water 85 feet downstream of the dam and power plant; and lands and waters 75 feet upstream of the dam and power plant.

DATES: The closure will be effective January 2, 2003 and will remain in effect indefinitely.

ADDRESSES: A map is available for inspection at the Bureau of Reclamation's Central California Area Office, located at 7794 Folsom Dam Road, Folsom, California 95630. The map may be viewed between the hours of 8 a.m. and 4 p.m., Monday through Friday. To have a map mailed to your address, send your request to the above address, Attention: Nimbus Dam Map Request.

FOR FURTHER INFORMATION CONTACT: Bureau of Reclamation, Mid-Pacific Region Public Affairs Office at (916) 978–5100 or the Bureau of Reclamation, Central California Area Office at (916) 988–1707.

SUPPLEMENTARY INFORMATION: This action is being taken under 43 CFR 423.3 to improve facility security and public safety. The Bureau of Reclamation will be prohibiting access to the structure in an effort to prevent activities that may inadvertently or deliberately cause property damage to the structure. The following acts are prohibited on the facilities, lands and waters in the closure area: (a) Trespassing, entering, or remaining in or upon the closure areas described above. (Exceptions: Operation and Maintenance personnel that have expressed authorization from the Bureau of Reclamation; law enforcement and fire department officers and Bureau of Reclamation employees acting within the scope of their employment, and any others who have received expressed written authorization from the Bureau of Reclamation to enter the closure areas). (b) Tampering or attempting to tamper with the facilities, structures or other property or real property located within the closure areas or moving, manipulating, or setting in motion any of the parts thereof. (Exceptions: *see* a. above). (c) Vandalism or destroying, injuring, defacing, or damaging property that is not under one's lawful control or possession.

Closing of the area will also improve the agency's ability to detect and respond to potential problems at the facility. In addition, prohibiting public access to the tailrace area will reduce the likelihood of drowning incidents. The water releases from the power plant are turbulent and should an individual fall into the tailrace, drowning is a highly probable outcome. This order is posted in accordance with 43 CFR 423.3(b). Violation of this prohibition or any prohibition listed in 43 CFR part 423 is punishable by fine, or imprisonment for not more than six months, or both.

Dated: October 21, 2002.

Thomas J. Aiken,

Area Manager, Central California Area Office, Mid-Pacific Region.

[FR Doc. 03–2156 Filed 1–29–03; 8:45 am]

BILLING CODE 4310–MN–M

INTERNATIONAL TRADE COMMISSION

[USITC SE–03–002]

Sunshine Act Meeting

AGENCY HOLDING THE MEETING: International Trade Commission.

TIME AND DATE: February 5, 2003, at 9:30 a.m.

PLACE: Room 101, 500 E Street, SW., Washington, DC 20436. Telephone: (202) 205–2000.

STATUS: Open to the public.

MATTERS TO BE CONSIDERED:

1. Agenda for future meetings: none.
2. Minutes.
3. Ratification list.
4. Inv. No. TA–421–2 (Remedy)(Certain Steel Wire Garment Hangers from China)—briefing and vote. (The Commission is currently scheduled to transmit its proposals on remedy to the President and the United States Trade Representative on February 18, 2003.)
5. Outstanding action jackets: none.

In accordance with Commission policy, subject matter listed above, not disposed of at the scheduled meeting, may be carried over to the agenda of the following meeting.

By order of the Commission.

Issued: January 27, 2003.

Marilyn R. Abbott,

Secretary to the Commission.

[FR Doc. 03–2259 Filed 1–27–03; 4:52 pm]

BILLING CODE 7020–02–P

DEPARTMENT OF JUSTICE

Office of Justice Programs

Agency Information Collection Activities: Proposed Collection; Comments Requested

ACTION: 60-day emergency notice of information collection under review: Reinstatement, without change, of a previously approved collection for which approval has expired. Certification of compliance with eligibility requirements of grants to reduce crimes against women.

The Department of Justice, Office of Justice Programs, Office on Violence Against Women has submitted the following information collection request to the Office of Management and Budget (OMB) for review and clearance in accordance with emergency review procedures of the Paperwork Reduction Act of 1995. OMB approval has been requested by January 31, 2003. The proposed information collection is published to obtain comments from the public and affected agencies. If granted, the emergency approval is only valid for 180 days. Comments should be directed to OMB, Office of Information and Regulation Affairs, Attention: Department of Justice Desk Officer (202) 395–6466, Washington, DC 20503.

During the first 60 days of this same review period, a regular review of this information collection is also being undertaken. All comments and suggestions, or questions regarding additional information, to include obtaining a copy of the proposed information collection instrument with instructions, should be directed to Cathy Poston, Attorney/Advisor, Office on Violence Against Women, Office of Justice Programs, Department of Justice, 810 7th Street, NW., Washington DC 20531, or facsimile (202) 305–2589.

Request written comments and suggestions from the public and affected agencies concerning the proposed collection of information. Your comments should address one or more of the following four points:

(1) Evaluate whether the proposed collection of information is necessary for the proper performance of the functions of the agency, including whether the information will have practical utility;

(2) Evaluate the accuracy of the agencies estimate of the burden of the proposed collection of information, including the validity of the methodology and assumptions used;

(3) Enhance the quality, utility, and clarity of the information to be collected; and

(4) Minimize the burden of the collection of information on those who are to respond, including through the use of appropriate automated, electronic, mechanical, or other technological collection techniques or other forms of information technology, *e.g.,* permitting electronic submission of responses.

Overview of This Information

(1) Type of information collection: Reinstatement, without Change, of a Previously Approved Collection for which Approval has expired.

(2) The title of the form/collection: Certification of Compliance with Eligibility Requirements of Grants to Reduce Crimes against Women.

(3) The agency form number, if any, and the applicable component of the department sponsoring the collection: Form Number: none. Office on Violence Against Women, Office of Justice Programs, Department of Justice.

(4) Affected public who will be asked or required to respond, as well as a brief abstract: Primary: Institutions of Higher Education. Other: None. The grants to Reduce Violent Crimes Against Women on Campus Program was authorized through section 826 of the Higher Education Amendments of 1998 to make funds available to institutions of higher education to combat domestic violence, dating violence, sexual assault and stalking crimes.

(5) An estimate of the total number of respondents and the amount of time estimated for an average respondent to respond/reply: It is estimated that 125 respondents will complete the application in approximately 30 minutes.

(6) An estimate of the total public burden (in hours) associated with the collection: The estimated total public burden associated with this application is 62 hours.

If additional information is required contact: Brenda E. Dyer, Department Deputy Clearance Officer, Information Management and Security Staff, Justice Management Division, United States Department of Justice, 601 D Street NW., Patrick Henry Building, Suite 1600, NW., Washington, DC 20530.

Dated: January 24, 2003.

Brenda Dyer,

Department Deputy Clearance Officer, United States Department of Justice.

[FR Doc. 03–2109 Filed 1–29–03; 8:45 am]

BILLING CODE 4410–18–M

DEPARTMENT OF LABOR

Employment Standards Administration

Proposed Collection; Comment Request

ACTION: Notice.

SUMMARY: The Department of Labor (the Department), as part of its continuing effort to reduce paperwork and respondent burden, conducts a preclearance consultation program to provide the general public and Federal agencies with an opportunity to comment on proposed and/or continuing collections of information in accordance with the Paperwork Reduction Act of 1995 (PRA) [44 U.S.C. 3506(c)(2)(A)]. This program helps to ensure that requested data can be provided in the desired format, reporting burden (time and financial resources) is minimized, collection instruments are clearly understood, and the impact of collection requirements on respondents can be properly assessed. Currently, the Employment Standards Administration is soliciting comments concerning the Office of Federal Contract Compliance Programs' (OFCCP) proposed information collection entitled Equal Opportunity Survey (EO Survey). A copy of the proposed information collection request can be obtained by contacting the office listed below in the addresses section of this Notice.

DATES: Written comments must be submitted to the office listed in the addresses section below on or before March 31, 2003.

ADDRESSES: Ms. Hazel Bell, U.S. Department of Labor, 200 Constitution Ave., NW., Room S–3201, Washington, DC 20210, telephone (202) 693–0418 (voice) or (202) 693–1308 (TTY), fax (202) 693–1451, E-mail *hbell@fenix2.dol-esa.gov.* Please use only one method of transmission for comments (mail, fax, or E-mail).

SUPPLEMENTARY INFORMATION

I. Background

OFCCP's regulations at 41 CFR 60–2.18 authorize OFCCP to collect data through use of the EO Survey. The EO Survey requests data that can be derived from employment and other related records that contractors are required to collect and retain under OFCCP's regulations at 41 CFR 60–1.12. With these data, the EO Survey is intended to improve the selection of contractors for compliance evaluations, which the Department uses to determine compliance with non-discrimination and equal employment opportunity (EEO) regulations. OFCCP seeks to develop a selection tool that is able to identify those contractors that are more likely to be engaging in discriminatory employment practices. This revised selection tool would enable OFCCP to efficiently allocate its resources and avoid initiating evaluation of those employers who are in general compliance with EEO guidelines, thereby reducing the burden on them, and efficiently spending tax-payer dollars. Time constraints and a number of data problems affected an earlier pilot study of the EO Survey data in such a way so as not to be able to assess the Survey's predictive power. To perform a study that is not limited by these obstacles, OFCCP has engaged an outside contractor to study the Survey data. The contractor will assess data from the EO Survey submissions as part of its study. It is anticipated that the study will not be completed until 2004.

The current PRA authorization for the EO Survey is scheduled to expire on March 31, 2003. Accordingly, OFCCP requests a two-year extension of PRA authorization for the EO Survey, involving 10,000 EO Surveys per year. The two-year extension will permit OFCCP to complete the ongoing study of the EO Survey. Ten-thousand Surveys is the number the outside contractor needs to assess the Survey's reliability for finding employers that discriminate against their employees.

II. Review Focus

The Department of Labor is particularly interested in comments which:

- Evaluate whether the proposed collection of information is necessary for the proper performance of the functions of the agency, including whether the information will have practical utility;
- Evaluate the accuracy of the agency's estimate of the burden of the proposed collection of information, including the validity of the methodology and assumptions used;
- Enhance the quality, utility and clarity of the information to be collected; and
- Minimize the burden of the collection of information on those who are to respond, including through the use of appropriate automated, electronic, mechanical, or other technological collection techniques or other forms of information technology, *e.g.*, permitting electronic submissions of responses.

III. Current Actions

The Department seeks the extension of approval to collect this information to complete a study of the EO Survey as a tool to identify those contractors that are more likely to be engaging in discriminatory employment practices. The Survey could enable OFCCP to efficiently allocate its resources to avoid initiating evaluation of those employers who are in general compliance with EEO guidelines, thereby reducing the burden on them and efficiently spending tax-payer dollars. The OFCCP seeks a two-year extension to the approval of the Equal Opportunity Survey. There is no change in the substance or method of collection since the last OMB approval.

Type of Review: Extension.

Agency: Employment Standards Administration.

Title: Equal Opportunity Survey.

OMB Number: 1215–0196.

Affected Public: Business or other for-profit; Not-for-profit institutions.

Total Respondents/Responses: 10,000.

Frequency: Annually.

Average Burden per Response: 21 hours.

Estimated Total Burden Hours: 210,000.

Total Burden Cost (capital/startup): $0.

Total Burden Cost (operating/maintenance): $30,000.

Comments submitted in response to this notice will be summarized and/or included in the request for Office of Management and Budget approval of the information collection request; comments will also become a matter of public record.

Dated: January 28, 2003.

Bruce Bohanon,

Chief, Branch of Management Review and Internal Control, Division of Financial Management, Office of Management, Administration and Planning, Employment Standards Administration.

[FR Doc. 03–2283 Filed 1–29–03; 8:45 am]

BILLING CODE 4510–CM–P

NATIONAL ARCHIVES AND RECORDS ADMINISTRATION

Records Schedules; Availability and Request for Comments

AGENCY: National Archives and Records Administration (NARA).

ACTION: Notice of availability of proposed records schedules; request for comments.

SUMMARY: The National Archives and Records Administration (NARA) publishes notice at least once monthly of certain Federal agency requests for records disposition authority (records schedules). Once approved by NARA, records schedules provide mandatory instructions on what happens to records when no longer needed for current Government business. They authorize the preservation of records of continuing value in the National Archives of the United States and the destruction, after a specified period, of records lacking administrative, legal, research, or other value. Notice is published for records schedules in which agencies propose to destroy records not previously authorized for disposal or reduce the retention period of records already authorized for disposal. NARA invites public comments on such records schedules, as required by 44 U.S.C. 3303a(a).

DATES: Requests for copies must be received in writing on or before March 17, 2003. Once the appraisal of the records is completed, NARA will send a copy of the schedule. NARA staff usually prepare appraisal memorandums that contain additional information concerning the records covered by a proposed schedule. These, too, may be requested and will be provided once the appraisal is completed. Requesters will be given 30 days to submit comments.

ADDRESSES: To request a copy of any records schedule identified in this notice, write to the Life Cycle Management Division (NWML), National Archives and Records Administration (NARA), 8601 Adelphi Road, College Park, MD 20740–6001. Requests also may be transmitted by FAX to 301–837–3698 or by e-mail to

records.mgt@nara.gov. Requesters must cite the control number, which appears in parentheses after the name of the agency which submitted the schedule, and must provide a mailing address. Those who desire appraisal reports should so indicate in their request.

FOR FURTHER INFORMATION CONTACT: Paul M. Wester, Jr., Director, Life Cycle Management Division (NWML), National Archives and Records Administration, 8601 Adelphi Road, College Park, MD 20740–6001. Telephone: 301–837–3120. E-mail: *records.mgt@nara.gov.*

SUPPLEMENTARY INFORMATION: Each year Federal agencies create billions of records on paper, film, magnetic tape, and other media. To control this accumulation, agency records managers prepare schedules proposing retention periods for records and submit these schedules for NARA's approval, using the Standard Form (SF) 115, Request for Records Disposition Authority. These schedules provide for the timely transfer into the National Archives of historically valuable records and authorize the disposal of all other records after the agency no longer needs them to conduct its business. Some schedules are comprehensive and cover all the records of an agency or one of its major subdivisions. Most schedules, however, cover records of only one office or program or a few series of records. Many of these update previously approved schedules, and some include records proposed as permanent.

No Federal records are authorized for destruction without the approval of the Archivist of the United States. This approval is granted only after a thorough consideration of their administrative use by the agency of origin, the rights of the Government and of private persons directly affected by the Government's activities, and whether or not they have historical or other value.

Besides identifying the Federal agencies and any subdivisions requesting disposition authority, this public notice lists the organizational unit(s) accumulating the records or indicates agency-wide applicability in the case of schedules that cover records that may be accumulated throughout an agency. This notice provides the control number assigned to each schedule, the total number of schedule items, and the number of temporary items (the records proposed for destruction). It also includes a brief description of the temporary records. The records schedule itself contains a full description of the records at the file unit level as well as their disposition. If NARA staff has prepared an appraisal memorandum for the schedule, it too includes information about the records. Further information about the disposition process is available on request.

Schedules Pending

1. Department of the Army, Agency-wide (N1–AU–01–20, 7 items, 6 temporary items). Records relating to the management of models and simulations. Included are records documenting standards and requirements development, board and working group proceedings, improvement proposals, and domain management. Also included are electronic copies of documents created using electronic mail and word processing. Proposed for permanent retention are recordkeeping copies of policy and program management reports, which include such records as standards reports, master plans, and acquisition and training guidelines. This schedule authorizes the agency to apply the proposed disposition instructions to any recordkeeping medium.

2. Department of the Army, Agency-wide (N1–AU–03–1, 2 items, 2 temporary items). Electronic master files and outputs/reports relating to child and spouse abuse. A copy of the master file becomes part of a Department of Defense database that was previously approved for permanent retention.

3. Department of the Army, Agency-wide (N1–AU–03–02, 2 items, 2 temporary items). Master files and reports associated with the Groups Operational Passenger System. Records contain information regarding the receipt and processing of group movement requests and associated offers of service from the commercial carrier industry. This schedule authorizes the agency to apply the proposed disposition instructions to any recordkeeping medium.

4. Department of Defense, Office of the Inspector General (N1–509–03–1, 2 items, 1 temporary item). Criminal investigation case files. This schedule modifies slightly the previously approved selection criteria for permanent case files and also increases the retention period for files that lack historical significance, which were previously scheduled for disposal.

5. Department of Defense, Defense Security Service (N1–446–03–2, 14 items, 14 temporary items). Records relating to international programs. Records relate to such matters as trips, foreign government contacts and liaison assignments, transportation plans, security violations, secured communications, and security briefings. Also included are electronic copies of documents created using electronic mail and word processing. This schedule authorizes the agency to apply the proposed disposition instructions to any recordkeeping medium.

6. Department of Health and Human Services, Centers for Medicare and Medicaid Services (N1–440–00–5, 10 items, 7 temporary items). Records of the Office of Actuary relating to national expenditures for health-related goods and services, including paper and electronic source records and a web version of the annual report. Also included are electronic copies of records created using electronic mail and word processing. Proposed for permanent retention are electronic data files, annual reports, and system documentation.

7. Department of Interior, U.S. Geological Survey (N1–57–03–1, 46 items, 27 temporary items). Audiovisual records, geospatial data, cartographic records, remote sensing records, architectural drawings, engineering records, and publishing records. Included are such materials as miscellaneous general interest photographs, duplicate video prints, surveillance recordings, pre-mix sound elements and sound library recordings, unaltered or minimally altered data layers and non-significant data layers, contract negotiation drawings, publication approval records, copyright files, manuscripts, working papers and background materials, publications research records, information products management files, unofficial information products, and electronic files and artwork used in publishing. Also included are electronic copies of records created using electronic mail, spreadsheet, and word processing applications. Proposed for permanent retention are such records as mission-related photographs, motion pictures, stock footage, video recordings, audio recordings, geospatial data sets, and remote sensing records.

8. Department of Justice, Civil Rights Division (N1–60–03–3, 5 items, 2 temporary items). Inputs and outputs of the Case Management System, which is used for tracking investigations and cases. Proposed for permanent retention are the master files of the database (both the public-use and full-text versions) and the associated system documentation.

9. Department of Justice, Federal Bureau of Investigation (N1–65–03–1, 2 items, 2 temporary items). Work papers relating to financial management audits and electronic data processing audits. Also included are electronic copies of

records created using word processing and electronic mail.

10. Administrative Office of the U.S. Courts, Office of Internal Services (N1–116–03–3, 5 items, 4 temporary items). Briefing book background materials and appropriations hearing correspondence files. Included are such records as statements, questions prepared by program offices, and correspondence with judges and others relating to judicial appropriations. Also included are electronic copies of documents created using electronic mail and word processing. Recordkeeping copies of House and Senate hearings briefing books are proposed for permanent retention.

11. Commission on Affordable Housing and Health Facility Needs for Seniors in the 21st Century, Agency-wide (N1–220–03–3, 20 items, 11 temporary items). Audio cassette copies of meeting minutes and hearings used solely for making transcripts, administrative general correspondence, staff working papers, copies of contracts, reference materials, electronic copies created using electronic mail and word processing, and the Commission's web site. Recordkeeping copies of such files as meeting minutes, Commissioners' working papers, task force records, reports and studies, hearing transcripts, press releases, and photographs are proposed for permanent retention.

12. Environmental Protection Agency, Office of Pollution, Prevention, and Toxics (N1–412–01–11, 3 items, 2 temporary items). Paper records relating to regulating chemical or chemical mixtures under Section 6 of the Toxic Substances Control Act that have been microfilmed. Also included are electronic copies of documents created using electronic mail and word processing. Microfilm copies and paper records that have not been filmed are proposed for permanent retention.

13. Executive Office of the President, Office of Management and Budget (N1–51–03–2, 8 items, 1 temporary item). Backup tapes of electronic mail of the Management Division, the Office of Federal Procurement Policy, and the Health and Income Maintenance Division. Master files of messages and the related indexes and documentation are proposed for permanent retention.

14. National Bioethics Advisory Commission, Agency-wide (N1–220–01–6, 13 items, 5 temporary items). Copies of materials used solely for answering requests, reference materials, electronic copies created using electronic mail and word processing, and the Commission's web site. Proposed for permanent retention are recordkeeping copies of such files as the Commission's final report, surveys, hearing transcripts, correspondence, and meeting minutes.

15. Tennessee Valley Authority, Fossil Power Group (N1–142–03–2, 15 items, 15 temporary items). Records documenting the operation and maintenance of generators and auxiliary equipment at fossil power plants. Records relate to such matters as meter readings, temperature and pressure points, electrical power distribution, and inspections. Also included are electronic copies of documents created using electronic mail and word processing.

Dated: January 22, 2003.

Michael J. Kurtz,

Assistant Archivist for Record Services,—Washington, DC.

[FR Doc. 03–2114 Filed 1–29–03; 8:45 am]

BILLING CODE 7515–01–P

NATIONAL COUNCIL ON DISABILITY

International Watch Advisory Committee Meetings (Conference Calls); Correction

ACTION: Notice; correction.

SUMMARY: The National Council on Disability published a document in the **Federal Register** on December 2, 2002, concerning meeting dates for its International Watch Advisory Committee. The document contained one incorrect date.

FOR FURTHER INFORMATION CONTACT: Joan M. Durocher, Attorney Advisor and Designated Federal Official, National Council on Disability, 1331 F Street NW., Suite 850, Washington, DC 20004; 202–272–2004 (voice), 202–272–2074 (TTY), 202–272–2022 (fax), *jdurocher@ncd.gov* (e-mail).

Correction

In the **Federal Register** of December 2, 2002, in FR Doc. 02–30401, on page 71595, correct the ''Time and Dates for 2003'' caption to read:

Time and Dates for 2003: 12 noon, Eastern Time, January 9, March 13, May 1, July 3, September 4, November 6.

Dated: January 27, 2003.

Ethel D. Briggs,

Executive Director.

[FR Doc. 03–2191 Filed 1–29–03; 8:45 am]

BILLING CODE 6820–MA–P

NUCLEAR REGULATORY COMMISSION

[Docket Nos. 50–238, 50–249, 50–254, and 50–265]

Exelon Generation Company, LLC; Dresden Nuclear Power Station, Units 2 and 3; Quad Cities Nuclear Power Station, Units 1 and 2; Notice of Receipt of Application for Renewal of Facility Operating License Nos. DPR–19, DPR–25, DPR–29, and DPR–30 for an Additional 20-Year Period

The U.S. Nuclear Regulatory Commission (NRC or Commission) has received an application, dated January 3, 2003, from the Exelon Generation Company, LLC, filed pursuant to section 104b of the Atomic Energy Act of 1954, as amended, and 10 CFR part 54, to renew Operating License Nos. DPR–19, DPR–25, DPR–29, and DPR–30 for the Dresden Nuclear Power Station, Units 2 and 3, and the Quad Cities Nuclear Power Station, Units 1 and 2, respectively. Renewal of the licenses would authorize the applicant to operate each of the facilities for an additional 20-year period. The current operating licenses for the Dresden Nuclear Power Station, Units 2 and 3, expire on December 22, 2009, and January 12, 2011, respectively. Both of the current operating licenses for the Quad Cities Nuclear Power Station, Units 1 and 2, expire on December 14, 2012. The Dresden Nuclear Power Station, Units 2 and 3, are boiling-water reactors designed by General Electric Company and are located in Grundy County, Illinois. The Quad Cities Nuclear Power Station, Units 1 and 2, are also boiling-water reactors designed by General Electric Company, and are located in Rock Island County, Illinois. The acceptability of the tendered application for docketing and other matters, including an opportunity to request for a hearing, will be the subject of a subsequent **Federal Register** notice.

Copies of the application are available for public inspection at the Commission's Public Document Room (PDR), located at One White Flint North, 11555 Rockville Pike (first floor), Rockville, Maryland, or electronically from the Publicly Available Records (PARS) component of the NRC's Agencywide Documents Access and Management System (ADAMS) under accession number ML030090359. The ADAMS Public Electronic Reading Room is accessible from the NRC Web site at *http://www.nrc.gov/reading-rm/adams.html.* In addition, the application is available on the NRC web page at *http://www.nrc.gov/reactors/operating/licensing/renewal/applications.html,*

while the application is under review. Persons who do not have access to ADAMS or who encounter problems in accessing the documents located in ADAMS, should contact the NRC's PDR Reference staff at 1–800–397–4209, 301–415–4737, or by e-mail to *pdr@nrc.gov.*

The license renewal application is also available to local residents near the Dresden Nuclear Power Station at the Morris Public Library in Morris, Illinois, and at the Coal City Public Library in Coal City, Illinois. For local residents near the Quad Cities Nuclear Power Station, the license renewal application is available at the River Valley District Library in Port Byron, Illinois.

For the Nuclear Regulatory Commission:

Dated at Rockville, Maryland, this 24th day of January 2003.

Pao-Tsin Kuo,

Program Director, License Renewal and Environmental Impacts, Division of Regulatory Improvement Programs, Office of Nuclear Reactor Regulation.

[FR Doc. 03–2181 Filed 1–29–03; 8:45 am]

BILLING CODE 7590–01–P

NUCLEAR REGULATORY COMMISSION

Revised Analysis of Decommissioning Reference Non-Fuel-Cycle Facilities, Availability of NUREG

AGENCY: Nuclear Regulatory Commission.

ACTION: Notice of availability and request for public comment.

SUMMARY: The Nuclear Regulatory Commission's (NRC) is announcing the availability of NUREG/CR–6477, ''Revised Analysis of Decommissioning Reference Non-Fuel-Cycle Facilities.'' This report analyses changes in conceptual decommissioning costs for a number of different types of reference nuclear materials facilities.

DATES: Submit comments by March 3, 2003. Comments received after this date will be considered if it is practical to do so, but the Commission is able to ensure consideration only for comments received on or before this date.

ADDRESSES: Submit comments to: Clark Prichard, Division of Industrial and Medical Nuclear Safety, Office of Nuclear Material Safety and Safeguards, U.S. Nuclear Regulatory Commission, Washington, DC 20555–0001, *cwp@nrc.gov.*

Deliver comments to 11555 Rockville Pike, Rockville, MD, between 7:30 a.m. and 4:15 p.m. on Federal workdays.

The NRC maintains an Agencywide Document Access and Management System (ADAMS), which provides text and image files of NRC's public documents. These documents may be accessed through the NRC's Public Electronic Reading Room on the Internet at *http://www.nrc.gov/reading-rm/adams.html.* The ADAMS accession number for NUREG/CR–6477 is ML030160573. If you do not have access to ADAMS or if there are problems in accessing the documents located in ADAMS, contact the NRC Public Document Room (PDR) Reference staff at 1–800–397–4209, 301–415–4737, or by e-mail to *pdr@nrc.gov.*

Single hard copies are available from the contact listed below.

FOR FURTHER INFORMATION, CONTACT: Clark Prichard, Division of Industrial and Medical Nuclear Safety, Office of Nuclear Material Safety and Safeguards, U.S. Nuclear Regulatory Commission, Washington, DC 20555–0001 (301–415–6203), *cwp@nrc.gov.*

SUPPLEMENTARY INFORMATION: ''Revised Analysis of Decommissioning Reference Non-Fuel-Cycle Facilities,'' NUREG/CR–6477 provides estimates of the costs of decommissioning for a number of different types of non-fuel-cycle materials facilities, such as laboratories for the manufacture of sealed sources, laboratories for the manufacture of radionuclide-labeled compounds, and an institutional user laboratory. It is a re-evaluation of the original study of decommissioning costs for these types of facilities (NUREG/CR–1754 and NUREG/CR–1754, Addendum 1. It is part of a series of reports developed by Pacific Northwest National Laboratory providing decommissioning cost information.

Dated at Rockville, Maryland, this 22nd day of January, 2003.

For the Nuclear Regulatory Commission.

Patricia K. Holahan,

Chief, Regulation and Guidance Branch, Division of Industrial and Medical Nuclear Safety, Office of Nuclear Material Safety and Safeguards.

[FR Doc. 03–2180 Filed 1–29–03; 8:45 am]

BILLING CODE 7590–01–P

SECURITIES AND EXCHANGE COMMISSION

[Release No. IC–25912; 812–12502]

LB Series Fund Inc. et al.; Notice of Application

January 24, 2003.

AGENCY: Securities and Exchange Commission (''Commission'')

ACTION: Notice of application for an order under section 6(c) of the Investment Company Act of 1940 (the ''Act'') for an exemption from section 15(a) of the act and rule 18f–2 under the Act.

SUMMARY OF APPLICATION: Applicants request an order that would permit them to enter into and materially amend subadvisory agreements without shareholder approval.

APPLICANTS: LB Series Fund, Inc. (''LBSF''), AAL Variable Product Series Fund, Inc. (''AAL VPSF''), The Lutheran Brotherhood Family of Funds (''The LB Family of Funds''), and The AAL Mutual Funds (''AAL Funds'')(each a ''Company'') and Thrivent Financial for Lutherans (''Thrivent'') and Thrivent Investment Management Inc. (''TIMI'')(each a ''Manager'').

FILING DATES: The application was filed on April 17, 2001 and amended on January 22, 2003.

HEARING OR NOTIFICATION OF HEARING: An order granting the requested relief will be issued unless the Commission orders a hearing. Interested persons may request a hearing by writing to the Commission's Secretary and serving applicants with a copy of the request, personally or by mail. Hearing requests should be received by the Commission by 5:30 p.m. on February 18, 2003 and should be accompanied by proof of service on applicants, in the form of an affidavit or, for lawyers, a certificate of service. Hearing requests should state the nature of the writer's interest, the reason for the request, and the issues contested. Persons who wish to be notified of a hearing may request notification by writing to the Commission's Secretary.

ADDRESSES: Secretary, Commission, 450 Fifth Street, NW., Washington, DC 20549–0609. Applicants, Peter T. Fariel, Esq., Goodwin Procter LLP, Exchange Place, Boston, MA 02109 or James E. Nelson, Thrivent Financial for Lutherans, 625 Fourth Avenue South, Minneapolis, MN 55415.

FOR FURTHER INFORMATION CONTACT: Todd F. Kuehl, Branch Chief, at (202) 942–0564, or Nadya Roytblat, Assistant Director, at (202) 942–0564 (Office of Investment Company Regulation, Division of Investment Management).

SUPPLEMENTARY INFORMATION: The following is a summary of the application. The complete application may be obtained for a fee at the Commission's Public Reference Branch, 450 Fifth Street NW., Washington, DC 20549–0102 (tel. 202–942–8090).

Applicants' Representations

1. Each Company is registered under the Act as an open-end management investment company. Each Company

currently offers multiple series (''Portfolios''), each with its own investment objectives, policies and restrictions. LBSF is incorporated under the laws of the State of Minnesota. AAL VPSF is incorporated under the laws of the State of Maryland. The LB Family of Funds is organized as a Delaware business trust. AAL Funds is organized as a Massachusetts business trust. Shares of the Portfolios of LBSF are offered exclusively to separate accounts that fund variable annuity and life insurance contracts issued by Thrivent, Lutheran Brotherhood Variable Insurance Products Company, a wholly owned subsidiary of Thrivent, and retirement plans sponsored by Thrivent. Shares of the Portfolios of AAL VPSF are offered exclusively to separate accounts that fund variable annuity and variable life insurance contracts issued by Thrivent and retirement plans sponsored by Thrivent.

2. Thrivent, organized as a fraternal benefit society under the laws of the State of Wisconsin, is registered as an investment adviser under the Investment Advisers Act of 1940 (''Advisers Act''). Under separate investment advisory agreements with LBSF (the ''LBSF Advisory Contract'') and AAL VPSF (the ''AAL VPSF Advisory Contract''), respectively. Thrivent serves as the investment adviser to the LBSF portfolios and AAL VPSF Portfolios. TIMI, a Delaware corporation and wholly owned subsidiary of Thrivent, is registered as an investment adviser under the Advisers Act. TIMI serves as investment adviser to the AAL Funds and The LB Family of Funds, providing services for the AAL Funds' Portfolios and The LB Family of Funds' Portfolios under separate advisory agreements (the ''AAL Funds Advisory Contract'' and the ''LB Family of Funds Advisory Contract,'' respectively, and together with the LBSF Advisory Contract and AAL VPSF Advisory Contract, each an ''Advisory Contract'' and collectively the ''Advisory Contracts''). The terms of each existing Advisory Contract comply with section 15(a) of the Act. The Advisory Contracts each require approval by shareholders of the applicable Portfolio and by the board of directors or trustees of each Company (each a ''Board''), including a majority of the directors or trustees who are not ''interested persons'' (as defined in section 2(a)(19) of the Act) of such Portfolio (the ''Independent Directors''), at the time and in the manner required by sections 15(a) and (c) of the Act and Rule 18f–2 thereunder.[1] For their services under the Advisory Contracts, the Managers receive a fee from each Portfolio as a percentage of the net assets of the Portfolio.

3. Pursuant to the Advisory Contract with each Manager, the Managers have primary responsibility for management of the Portfolios and may hire one or more sub-advisers (''Sub-Advisers'') to invest all or a portion of each Portfolio's assets pursuant to separate sub-advisory agreements (''Sub-Advisory Agreements''). Each Sub-Adviser has discretionary authority to invest that portion of a Portfolio's assets assigned to it. Each Sub-Adviser is or will be either registered or exempt from registration under the Advisers Act. For its services, each Sub-Adviser will receive a sub-advisory fee payable by the Manager out of the fee the Manager receives from the relevant Portfolio.

4. The Managers are subject to the general oversight and approval of the respective Boards. Sub-Adviser evaluation on both a quantitative and qualitative basis will be an ongoing process with the Manager selecting Sub-Advisers, as well as allocating and reallocating Portfolio assets among Sub-Advisers, subject to approval by the Portfolio's Board.

5. Applicants request relief to permit the Managers to enter into and materially amend Sub-Advisory Agreements without seeking shareholder approval. Applicants will not enter into any Sub-Advisory Agreement with a Sub-Adviser that is an ''affiliated person'' (as defined in section 2(a)(3) of the Act) of the Companies or the Managers, other than by reason of serving as a Sub-Adviser to one or more of the Portfolios (''Affiliated Sub-Adviser''), without that agreement, including the compensation to be paid thereunder, being approved by the shareholders of the Portfolio.

Applicants' Legal Analysis

1. Section 15(a) of the Act provides, in relevant part, that it is unlawful for any person to act as an investment adviser to a registered investment company except under a written contract that has been approved by the vote of a majority of the company's outstanding voting securities. Rule 18f–2 under the Act provides that each series or class of stock in a series company affected by a matter must approve such matter if the Act requires shareholder approval.

2. Section 6(c) of the Act provides that the Commission may exempt any person, security, or transaction or any class or classes of persons, securities, or transactions from any provision of the Act, or from any rule thereunder, if such exemption is necessary or appropriate in the public interest and consistent with the protection of investors and the purposes fairly intended by the policy and provisions of the Act. Applicants believe the requested relief meets this standard for the reasons discussed below.

3. Applicants assert that each Portfolio's shareholders are relying on the Manager's experience to select, monitor and replace Sub-Advisers. Applicants assert that, from the perspective of the shareholder, the role of the Sub-Advisers is comparable to that of individual portfolio managers employed by other investment advisory firms. Applicants contend that requiring shareholder approval of Sub-Advisory Agreements would impose costs and unnecessary delays on the Portfolios, and may preclude the Managers from acting promptly in a manner considered advisable by the applicable Board. Applicants note that the Advisory Contracts will remain subject to the shareholder approval requirements of section 15(a) of the Act and rule 18f–2 under the Act.

Applicants' Conditions

Applicants agree that any order granting the requested relief will be subject to the following conditions:

1. Before a Portfolio may rely on the order requested in the application, (i) the operation of the Portfolio in the manner described in the application will be approved by a majority of the outstanding voting securities of such Portfolio (or if the Portfolio serves as a funding medium for any sub-account of a registered separate account, pursuant to voting instructions provided by the owners of variable annuity and variable life insurance contracts (''Owners'') who have allocated assets to that sub-account) within the meaning of the Act, or (ii) in the case of a Portfolio whose shareholders (or Owners through a sub-account of a registered separate account) purchase shares on the basis of a

[1] Applicants also request that the requested relief apply to all series of the Companies now existing or established in the future and to all other registered open-end management investment companies and series thereof that (1) Are advised by a Manager, (or any person controlling, controlled by, or under common control with a Manager), (2) operate in a manager/sub-adviser structure as described in the application (the ''Manager/Sub-Adviser Structure''), and (3) comply with the terms and conditions of the applications (included in the term ''Portfolios''). All entities that currently intend to rely on the requested relief are named as applicants. If the name of any Portfolio should, at any time, contain the name of a Sub-Adviser (as defined above), it will also contain the name of the Manager, which will appear before the name of the Sub-Adviser.

prospectus containing the disclosure contemplated by condition 2 below, by the initial shareholder(s) before shares of such Portfolio are offered to the public (or to Owners through a sub-account of a registered separate account).

2. Each Portfolio relying on the requested order will disclose in its prospectus the existence, substance and effect of any order granted pursuant to the application. In addition, each Portfolio relying on the requested order will hold itself out to the public as employing the Manager/Sub-Adviser Structure described in the application. Such Portfolio's prospectus will prominently disclose that the Manager has ultimate responsibility (subject to oversight by the Board) to oversee the Sub-Advisers and recommend their hiring, termination and replacement.

3. The Manager will provide general management and administrative services to each Portfolio, including overall supervisory responsibility for the general management and investment of each Portfolio's securities and other assets, and, subject to review and approval by the applicable Board, will: (i) Set each Portfolio's overall investment strategies; (ii) evaluate, select and recommend Sub-Advisers to manage all or a part of a Portfolio's assets: (iii) when appropriate, allocate and reallocate a Portfolio's assets among multiple Sub-Advisers; (iv) monitor and evaluate the investment performance of Sub-Advisers; and (v) implement procedures reasonably designed to ensure Sub-Advisers comply with the relevant Portfolio's investment objectives, policies and restrictions.

4. At all times, a majority of the Board of a Portfolio will be Independent Directors, and the nomination of new or additional Independent Directors will be at the discretion of the then existing Independent Directors.

5. Neither the Manager nor any Portfolio will enter into a Sub-Advisory Agreement with any Affiliated Sub-Adviser without such Sub-Advisory Agreement, including the compensation to be paid thereunder, being approved by the shareholders of the applicable Portfolio (or, if the Portfolio serves as a funding medium for any sub-account of a registered separate account, then pursuant to voting instructions of the Owners who have allocated assets to that sub-account).

6. When a Sub-Adviser change is proposed for a Portfolio with an Affiliated Sub-Adviser, the Board, including a majority of the Independent Directors, will make a separate finding, reflected in the minutes of the meeting of the Board, that such change is in the best interests of the applicable Portfolio and its shareholders (or, if the Portfolio serves as a funding medium for any sub-account of a registered separate account, in the best interests of the Portfolio and the Owners who have allocated assets to the sub-account) and does not involve a conflict of interest from which the Manager of the Affiliated Sub-Adviser derives an inappropriate advantage.

7. No director or officer of a Portfolio or director or officer of the Manager will own directly or indirectly (other than through a polled investment vehicle that is not controlled by the director or officer) any interest in Sub-Adviser except (i) for the ownership of interests in the Manager or any entity that controls, is controlled by, or is under common control with the Manager; or (ii) for ownership of less than 1% of the outstanding securities of any class of equity or debt of a publicly-traded company that is either a Sub-Adviser or an entity that controls, is controlled by, or is under common control with a Sub-Adviser.

8. Within 90 days of the hiring of any new Sub-Adviser, the Manager will furnish the shareholders (or, if the Portfolio serves as a funding medium for a sub-account of a registered separate account, the Owners who have allocated assets to that sub-account) of the applicable Portfolio all the information about the new Sub-Adviser that would have been included in a proxy statement. To meet this obligation, the Manager will provide the shareholders (or if the Portfolio serves as a funding medium for any sub-account of a registered separate account, the Owners) of the applicable Portfolio with an information statement meeting the requirements of Regulation 14C and Schedule 14C under the Securities Exchange Act of 1934, as amended, as well as the requirements of Item 22 of Schedule 14A under that Act.

For the Commission, by the Division of Investment Management, under delegated authority.

Margaret H. McFarland,

Deputy Secretary.

[FR Doc. 03–2167 Filed 1–29–03; 8:45 am]

BILLING CODE 8010–01–M

SECURITIES AND EXCHANGE COMMISSION

[Release No. IC–25913; File No. 812–12885]

Nationwide Life Insurance Company, et al.

January 24, 2003.

AGENCY: The Securities and Exchange Commission (the ''Commission'').

ACTION: Notice of Application for an order pursuant to section 6(c) of the Investment Company Act of 1940 (the ''1940 Act'') to amend a prior order of the Commission under section 6(c) of the 1940 Act which granted exemptions from the provisions of Sections 2(a)(32), 22(c), and 27(i)(2)(A) of the 1940 Act and Rule 22c–1 thereunder to permit the recapture of credits applied to purchase payments made under certain deferred variable annuity contracts.

SUMMARY OF APPLICATION: On January 19, 2000 the Commission issued an order pursuant to section 6(c) of the 1940 Act granting exemptions from sections 2(a)(32), 22(c) and 27(i)(2)(A) of the 1940 Act and Rule 22c–1 thereunder to permit the recapture of credits applied to purchase payments made under certain variable annuity contracts issued by Nationwide Life Insure Company (the ''Original Order''. *See* Nationwide Life Insurance Company, *et al.,* Investment Company Act Release No. 24256 (File No. 812–11824). Applicants seek an amendment to the Original Order pursuant to section 6(c) of the 1940 Act granting exemptions from the provisions of sections 2(a)(32), 22(c) and 27(i)(2)(A) of the 1940 Act and Rule 22c–1 thereunder to permit the recapture of credits applied to purchase payments made under certain variable annuity contracts under circumstances not contemplated under the Original Order. Applicants also request the relief under the order to extend to any current or current separate accounts of Nationwide Life Insurance Company which may in the future offer or support contracts that are substantially similar in all material respects to the contracts described in the Application (the ''Other Separate Accounts'') and to any other NASD registered broker/dealers under common control with Nationwide Life Insurance Company which may in the future serve as general distributor-principal underwriter of VA–II or Other Separate Accounts that offer or support variable annuity contracts that are substantially similar in all material respects to those describe in this Application.

APPLICANTS: Nationwide Life Insurance Company (''Nationwide''); Nationwide Variable Account-II (''VA–II''); and Nationwide Investment Services Corporation (''NISC'') (all collectively, the ''Applicants'').

FILING DATE: The Application was filed on September 23, 2002. Amended Applications were filed on January 14, 2003 and January 24, 2003.

HEARING OR NOTIFICATION OF HEARING: An order granting the application will be

issued unless the Commission orders a hearing. Interested persons may request a hearing by writing the Secretary of the Commission and serving Applicants with a copy of the request, personally or by mail. Hearing request should be received by the Commission by 5:30 p.m. on February 14, 2003, and should be accompanied by proof of service on Applicants in the form of an affidavit or, for lawyers, a certificate of service. Hearing requests should state the nature of the writer's interest, the reason for the request, and the issues contested. Persons may request notification of a hearing by writing to the Secretary of the Commission.

ADDRESS: Secretary, Securities and Exchange Commission, 450 Fifth Street, NW., Washington, DC 20549–0609. Applicants, c/o Nationwide Life Insurance Company, One Nationwide Plaza 01–09–V3, Columbia, Ohio 43215, Attn: Jamie Casto, Esq.

FOR FURTHER INFORMATION CONTACT: Rebecca A. Marquigny, Senior Counsel, or Zandra Bailes, Branch Chief, at (202) 942–0670, Office of Insurance Products, Division of Investment Management.

SUPPLEMENTARY INFORMATION: The following is a summary of the application. The complete application is available for a fee from the Commission's Public Reference Branch, 450 Fifth Street, NW., Washington, DC 20549–0102 (telephone (202) 942–8090).

Applicants' Representations

1. Nationwide is a stock life insurance company organized under the laws of the State of Ohio. Nationwide offers traditional group and individual life insurance products as well as group and individual variable and fixed annuity contracts. Nationwide is wholly owned by Nationwide Financial Services, Inc. (''NFS''). NFS, a Delaware Corporation, is a publicly traded holding company with two classes of common stock outstanding, each with different voting rights. This enables Nationwide Corporation (the holder of all the outstanding Class B Common Stock) to control NFS. Nationwide Corporation stock is held by Nationwide Mutual Insurance Company (95.24%) and Nationwide Mutual Fire Insurance Company (4.76%), the ultimate controllers of Nationwide.

2. On October 7, 1981, the Nationwide Spectrum Variable Account was established under Ohio law by Nationwide for the purpose of funding variable annuity contracts. On April 1, 1987, the Board of Directors for Nationwide changed the name of the Nationwide Spectrum Variable Account to Nationwide Variable Account–II. VA–II is registered as a unit investment trust (1940 Act No. 811–3330) and supports several different variable annuity contracts that are (or will be) registered separately on Form N–4.

3. On January 19, 2000, the Commission issued the Original Order pursuant to Section 6(c) of the 1940 Act granting exemptions from Section 2(a)(32), 22(c) and 27(i)(2)(A) of the 1940 Act and Rule 22c–1 thereunder to permit the recapture of credits applied to purchase payments made under certain variable annuity contracts (the ''Original Contracts'').

4. Recapture of Credits under the Original Order. Nationwide currently offers an optional benefit (for a charge equal to an annualized rate of 0.45% of the daily net assets of the variable account for the first 7 contract years) that allows for the investment of 103% of all purchase payments made during the first twelve months of the contract. The investment in excess of the remitted purchase payment (3% in connection with the Original Contracts) is referred to as the ''Credit.''

During the first 7 contract years, the Credit is fully vested except during the contractual free-look period and when certain withdrawals are taken from the contract.

If the contract owner cancels the contract pursuant to the contractual free-look privilege, Nationwide recaptures the Credit. For those jurisdictions that allow a return of contract value upon exercise of the free-look provision, the contract owner will also forfeit any amounts deducted from the contract as an Extra Value Option charge.

If, after the free-look period and before the end of the 7th contract year, the contract owner withdraws value from the contract that is subject to a Contingent Deferred Sales Charge (''CDSC''), Nationwide recaptures a portion of the Credit. The CDSC schedule is as follows:

Number of completed years from date of purchase payment	CDSC percentage
0	7
1	7
2	6
3	5
4	4
5	3
6	2
7	0

Nationwide does not recapture any Credit if the withdrawal is a free withdrawal (a withdrawal not subject to the CDSC) as described in the contract. Thus, the percentage of the Credit that Nationwide recaptures is determined by the percentage of withdrawn purchase payments that are subject to CDSC. The recaptured amount is taken proportionately from each investment option as allocated at the time of the withdrawal.

No recapture takes place after the end of the 7th contract year; if the contract is annuitized; if a death benefit becomes payable; if distributions are required in order to meet minimum distribution requirements under the Internal Revenue Code of 1986, as amended (the ''Code''); if free withdrawals are being taken pursuant to an aged-based systematic withdrawal program; or in connection with any other type of withdrawal not otherwise subject to a CDSC.

5. The Original Order does not contemplate the following recapture procedures, which Nationwide intends to include in 4 new annuity contracts that will be registered with the Commission (the ''New Contracts''):

a. Recapture of larger Credits over a longer period of time. In one of the New Contracts, Nationwide intends to offer a 3% Credit option and a 4% Credit option while imposing an 8 year CDSC schedule with a maximum CDSC of 8%. In another one of the New Contracts, Nationwide intends to offer a 3% Credit option and a 4% Credit option while imposing a 7 year CDSC schedule with a maximum CDSC of 7%. In the other 2 New Contracts, Nationwide intends to offer only the 3% Credit option while imposing a 7 year CDSC schedule with a maximum CDSC of 7%. Each of the 7 year CDSC schedules described above is the same schedule that was contemplated in the Original Order.

b. Recapture of Credits for 7 contract years for all of the New Contracts. Three of the 4 New Contracts have CDSC-reducing options that the contract owner can purchase: one option reduces the standard CDSC schedule to 4 years and the other option eliminates CDSC completely. For all of the New Contracts, Nationwide intends to recapture Credits for 7 contract years, even if the contract owner elected a CDSC-reducing option.

c. Recapture of Purchase Payment Credits. Purchase Payment Credits are credits that Nationwide applies to contracts when purchase payments reach certain aggregate amounts. Nationwide applies Purchase Payment Credits to every contract that meets the purchase payment thresholds (except for those contracts where the contract owner elected the No CDSC Option). Nationwide intends to recapture Purchase Payment Credits only upon a

contract owner's cancellation of the contract pursuant to the contractual free-look provisions.

6. The New Contracts generally. The New Contracts are flexible purchase payment deferred annuity contracts that will be sold to individuals as: (i) Non-qualified contracts which are governed for tax purposes by section 72 of the Code; (ii) Individual Retirement Annuities (''IRAs''), Roth IRAs, SEP IRAs or Simple IRAs which are governed by section 408 of the Code; (iii) Non-ERISA Tax Sheltered Annuities which are governed by section 403(b) of the Code; or (iv) Investment-Only Contracts, sold to qualified plans governed by section 401(a) of the Code. Contract owners may allocate their investments in the contract to variable investment options (underlying mutual funds), fixed investment options (including a fixed account Guaranteed Term Options or ''GTOs''), or a combination of fixed and variable investment options. The contracts also provide for certain services such as asset rebalancing, dollar cost averaging, and systematic withdrawals. If the annuitant dies before the annuitization date, Nationwide will pay a death benefit to the beneficiary. After two years from the date a New Contract is issued, a contract owner may elect to begin receiving annuity payments.

7. Purchase Payment Credits. Nationwide intends to apply Purchase Payment Credits to the New Contracts when total cumulative purchase payments reach retain aggregate levels. When cumulative purchase payments (minus surrenders) reach $500,000, Nationwide will apply to the contract Purchase Payment Credits equal to 0.50% of total purchase payments up to $999,999. When cumulative purchase payments (minus surrenders) reach $1 million, Nationwide will apply to the contract Purchase Payment Credits equal to 1.00% of total purchase payments (reduced by any previous Purchase Payment Credits applied), and on all purchase payments thereafter. Purchase Payment Credits are considered earnings, not purchase payments.

Purchase Payment Credits will be fully vested except during the contractual free-look period. If the contract owner cancels the contract pursuant to the contractual free-look provisions, Nationwide intends to recapture any Purchase Payment Credits applied.

8. Individual Characteristics of the New Contracts. Each of the 4 New Contracts is distinct and will be referred to as ''Contract A,'' ''Contract B,'' ''Contract C,'' and ''Contract D.''

a. Contract A. Contract A requires an initial purchase payment of $5,000 for non-qualified contracts and $3,000 for the remaining contract types (e.g., IRAs, etc.). If the contract owner elects to make subsequent purchase payments, they must be at least $500 each ($50 each if submitted via automatic electronic transfer).

i. Contract A assesses a Variable Account Charge equal to an annualized rate of 1.15% of the daily net assets of the variable account and an annual Contract Maintenance charge of $30 that is waived when the contract value reaches $50,000 on any contract anniversary.

ii. Contract A assesses a CDSC when certain amounts are withdrawn from the contract. The CDSC schedule is as follows:

Number of completed years from date of purchase payment	CDSC percentage
0	7
1	7
2	6
3	5
4	4
5	3
6	2
7	0

Under Contract A, a certain amount of CDSC-free withdrawals is permitted each year. This annual ''free-out'' amount is equal to 10% of purchase payments that are subject to CDSC. Contract A also provides for the waiver of CDSC: upon the annuitant's death, upon annuitization of the contract, when distributions are necessary in order to meet minimum distribution requirements under the Code, and under an age-based ''free-withdrawal'' program that allows contract owners to take systematic withdrawals of certain contract value percentages as specified ages without incurring a CDSC. Contact A includes a Long-Term Care/Nursing Home Waiver at no additional charge. The Long-Term Care/Nursing Home allows a contract owner to withdraw value from the contract free of CDSC if: (1) The third contract anniversary has passed and the contract owner has been confined to a long-term care facility or hospital for a continuous 90-day period that began after the contract issue date; or (2) the contract owner has been diagnosed by a physician to have a terminal illness.

iii. Contact A may be modified or augmented by a number of ''rider options'' that enable owners to elect certain contract features or benefits that fit their particular needs. The election of a rider option will result in a charge in addition to the basic Variable Account Charge. Rider options must be chosen at the time of application and once elected, a rider may not revoked. The rider options available under Contract A include:

- Four year CDSC Option. The Four Year CDSC Option reduces the standard 7 year CDSC period to 4 years as follows:

Numbers of completed years from date of purchase payment	CDSC percentage
0	7
1	6
2	5
3	4
4	0

An annualized charge of 0.25% of the daily net assets of the variable account is assessed for the election of this rider option. Election of the Four Year CDSC Option increases the minimum initial purchase payment to $10,000. The charge associated with this option will be assessed for the life of the contract.

- No CDSC Option. The No CDSC Option eliminates the assessment of CDSC upon withdrawal of value from the contract. An annualized charge of 0.30% of the daily net assets of the variable account is assessed for the election of this rider option. Election of the No CDSC Option: increases the minimum initial purchase payment to $10,000; eliminates the fixed account as an investment option under the contract; eliminates Enhanced Rate Dollar Cost Averaging as a contract owner service; and disqualifies the contract from receiving Purchase Payment Credits. The charge associated with the No CDSC Option will be assessed for the life of the contract.
- 3% Extra Value Option. Nationwide intends to offer a 3% Extra Value Option whereby Nationwide applies a Credit equal to 3% of all purchase payments made during the first 12 months of the contract. The Credit will be funded from Nationwide's general account and will be credited proportionately among the investment options chosen by the contract owner. The charge for this rider will be an annualized rate of 0.45% of the daily net assets of the variable account for the first 7 contract years only.
- One-Year Enhanced Death Benefit.
- Greater of One-Year or 5% Enhanced Death Benefit.
- Beneficiary Protector II Option.

b. Contract B. Contract B requires an initial purchase payment of $5,000 for non-qualified contracts and $3,000 for the remaining contract types (*e.g.,* IRAs, etc.). If the contract owner elects to make subsequent purchase payments, they must be at least $500 each ($50 each if submitted via automatic electronic transfer).

i. Contract B assesses a Variable Account Charge equal to an annualized rate of 1.10% of the daily net assets of the variable account and an annual Contract Maintenance Charge of $30 that is waived when the contract values reaches $50,000 on any contract anniversary.

ii. Contract B assesses a CDSC when certain amounts are withdrawn from the contract. The CDSC schedule is as follows:

Number of completed years from date of purchase payment	CDSC percentage
0	7
1	7
2	6
3	5
4	4
5	3
6	2
7	0

Under Contract B, a certain amount of CDSC-free withdrawals is permitted each year. This annual free-out'' amount is equal to 10% of purchase payments that are subject to CDSC. Contract B also provides for the waiver of CDSC: upon the annuitant's death, upon annuitization of the contract, when distributions are necessary in order to meet minimum distribution requirements under the Code, and under an age-based ''free-withdrawal'' program that allows contract owners to take systematic withdrawals of certain contract value percentages as specified ages without incurring a CDSC. Contract B includes a Long-Term Care/Nursing Home Waiver at no additional charge. The Long-Term Care/Nursing Home allows a contract owner to withdraw value from the contract free of CDSC if: (1) The third contract anniversary has passed and the contract owner has been confined to a long-term care facility or hospital for a continuous 90-day period that began after the contract issue date; or (2) the contract owner has been diagnosed by a physician to have a terminal illness.

iii. Contract B also offers rider options that will result in a charge in addition to the basic Variable Account Charge. Rider options must be chosen at the time of application and once elected, a rider option may not be revoked. The rider options available under Contract B include:

- 3% Extra Value Option. Nationwide intends to offer a 3% Extra Value Option whereby Nationwide applies a Credit equal to 3% of all purchase payments made during the first 12 months of the contract. The Credit will be funded from Nationwide's general account and will be credited proportionately among the investment options chosen by the contract owner. The charge for this rider will be an annualized rate of 0.45% of the daily net assets of the variable account for the first 7 contract years only.
- Spousal Protection Annuity Option.
- One-Year Enhanced Death Benefit.
- Greater of One-Year or 5% Enhanced Death Benefit.
- One-Month Enhanced Death Benefit.
- Beneficiary Protector II Option.

c. Contract C. Contract C requires an initial purchase payment of $5,000 for non-qualified contracts and $3,000 for the remaining contract types (*e.g.,* IRAs, etc.). If the contract owner elects to make subsequent purchase payments, they must be at least $500 each ($50 each if submitted via automatic electronic transfer).

i. Contract C assesses a Variable Account Charge equal to an annualized rate of 1.15% of the daily net assets of the variable account and an annual Contract Maintenance Charge of $30 that is waived when the contract value reaches $50,000 on any contract anniversary.

ii. Contract C assesses a CDSC when certain amounts are withdrawn from the contract. The CDSC schedule is as follows:

Number of completed years from date of purchase payment	CDSC percentage
0	7
1	7
2	6
3	5
4	4
5	3
6	2
7	0

Under Contract C, a certain amount of CDSC-free withdrawals is permitted each year. This annual ''free-out'' amount is equal to 10% of purchase payments that are subject to CDSC. Contract C also provides for the waiver of CDSC: upon the annuitant's death, upon annuitization of the contract, when distributions are necessary in order to meet minimum distribution requirements under the Code, and under an age-based ''free-withdrawal'' program that allows contract owners to take systematic withdrawals of certain contract value percentages as specified ages without incurring a CDSC. Contract C includes a Long-term Care/Nursing Home Waiver at no additional charge. The Long-Term Care/Nursing Home allows a contract owner to withdraw value from the contract free of CDSC if: (1) The third contract anniversary has passed and the contract owner has been confined to a long-term care facility or hospital for a continuous 90-day period that began after the contract issue date; or (2) the contract owner has been diagnosed by a physician to have a terminal illness.

iii. Contract C also offers rider options that will result in a charge in addition to the basic Variable Account Charge. Rider options must be chosen at the time of application and once elected, a rider option may not be revoked. The rider options available under Contract C include:

- Four Year CDSC Option. The Four Year CDSC Option reduces the standard 7 year CDSC period to 4 years as follows:

Number of completed years from date of purchase payment	CDSC percentage
0	7
1	6
2	5
3	4
4	0

An annualized charge of 0.25% of the daily net assets of the variable account is assessed for the election of this rider option. Election of the Four Year CDSC Option increases the minimum initial purchase payment to $10,000. The charge associated with this option will be assessed for the life of the contract.

- No CDSC Option. The No CDSC Option eliminates the assessment of CDSC upon withdrawal of value from the contract. An annualized charge of 0.30% of the daily net assets of the variable account is assessed for the election of this rider option. Election of the No CDSC Option: increases the minimum initial purchase payment to $10,000; eliminates the fixed account as an investment option under the contract; eliminates Enhanced Rate Dollar Cost Averaging as a contract owner service; and disqualifies the contract from receiving Purchase Payment Credits. The charge associated with the No CDSC Option will be assessed for the life of the contract.

• 3% Extra Value Option. Nationwide intends to offer a 3% Extra Value Option whereby Nationwide applies a Credit equal to 3% of all purchase payments made during the first 12 months of the contract. The Credit will be funded from Nationwide's general account and will be credited proportionately among the investment options chosen by the contract owner. The charge for this rider will be an annualized rate of 0.30% of the daily net assets of the variable account for the first 7 contract years only.

• 4% Extra Value Option. Nationwide intends to offer a 4% Extra Value Option whereby Nationwide applies a Credit equal to 4% of all purchase payments made during the first 12 months of the contract. The Credit will be funded from Nationwide's general account and will be credited proportionately among the investment options chosen by the contract owner. The charge for this rider will be an annualized rate of 0.40% of the daily net assets of the variable account for the first 7 contract years only.

• One-Year Enhanced Death Benefit.

d. Contract D. Contract D requires an initial purchase payment of $15,000. If the contract owner elects to make subsequent purchase payments, they must be at least $1,000 each ($150 each if submitted via automatic electronic transfer).

i. Contract D assesses a Variable Account Charge equal to an annualized rate of 1.55% of the daily net assets of the variable account.

ii. Contract D assesses a CDSC when certain amounts are withdrawn from the contract. The CDSC schedule is as follows:

Number of completed years from date of purchase payment	CDSC percentage
0	8
1	7
2	6
3	5
4	4
5	3
6	2
7	1
8	0

Under Contract D, a certain amount of CDSC-free withdrawals is permitted each year. This annual ''free-out'' amount is equal to 15% of purchase payments that are subject to CDSC. Contract D also provides for the waiver of CDSC: upon the annuitant's death, upon annuitization of the contract, when distributions are necessary in order to meet minimum distribution requirements under the Code, and under an age-based ''free-withdrawal'' program that allows contract owners to take systematic withdrawals of certain contract value percentages as specified ages without incurring a CDSC. Contract D includes a Long-Term Care/Nursing Home Waiver at no additional charge. The Long-Term Care/Nursing Home allows a contract owner to withdraw value from the contract free of CDSC if: (1) The third contract anniversary has passed and the contract owner has been confined to a long-term care facility or hospital for a continous 90-day period that began after the contract issue date; or (2) the contract owner has been diagnosed by physician to have a terminal illness.

iii. Contract D also offers rider options that will result in a charge in addition to the basic Variable Account Charge. Rider options must be chosen at the time of application and once elected, a rider option may not be revoked. The rider options available under Contract D include:

• Four Year CDSC Option. The Four Year CDSC Option reduces the standard 8 year CDSC period to 4 years as follows:

Number of completed years from date of purchase payment	CDSC percentage
0	7
1	6
2	5
3	4
4	0

An annualized charge of 0.20% of the daily net assets of the variable account is assessed for the election of this rider option. The charge associated with this option will be assessed for the life of the contract.

• No CDSC Option. The No CDSC Option eliminates the assessment of CDSC upon withdrawal of value from the contract. An annualized charge of 0.25% of the daily net assets of the variable account is assessed for the election of this rider option. Election of the No CDSC Option: eliminates the fixed account as an investment option under the contract; eliminates enhanced Rate Dollar Cost Averaging as a contract owner service; and disqualifies the contract from receiving Purchase Payment Credits. The charge associated with the No CDSC Option will be assessed for the life of the contract.

• 3% Extra Value Option. Nationwide intends to offer a 3% Extra Value Option whereby Nationwide applies a Credit equal to 3% of all purchase payments made during the first 12 months of the contract. The Credit will be funded from Nationwide's general account and will be credited proportionately among the investment options chosen by the contract owner. The charge for this rider will be an annualized rate of 0.10% of the daily net assets of the variable account for the first 8 contract years only.

• 4% Extra Value Option. Nationwide intends to offer a 4% Extra Value Option whereby Nationwide applies a Credit equal to 4% of all purchase payments made during the first 12 months of the contract. The Credit will be funded from Nationwide's general account and will be credited proportionately among the investment options chosen by the contract owner. The charge for this rider will be an annualized rate of 0.25% of the daily net assets of the variable account for the first 8 contract years only.

• Greater of One-Year or 5% Enhanced Death Benefit.

• Beneficiary Protector II Option.

9. Credits under the New Contracts.

a. Credits applied to the New Contracts will be fully vested except during the contractual free-look period and when certain surrenders of contract value are made.

i. Similar to the Original Contracts, if the contract owner exercises the contractual free-look privilege, Nationwide will recapture the Credit. For those jurisdictions that allow a return of contract value upon exercise of the free-look provision, the contract owner will also forfeit any amounts deducted from the contract as an Extra Value Option charge.

ii. After the contractual free-look period and before the end of the 7th contract year, certain withdrawals from contract value will subject the Credit to recapture. Prior to the end of the 7th contract year, if the contract owner withdraws value from the contract that is or would be subject to a CDSC under the standard CDSC schedule applicable to the contract, then Nationwide may recapture a portion of the Credit. Accordingly, any amount withdrawn pursuant to the contractual free withdrawal privilege is not subject to recapture. CDSC in the New Contracts is calculated in the same manner that CDSC is calculated in the Original Contracts. Thus, the percentage of the Credit to be recaptured will be determined by the percentage of total purchase payments reflected in the amount withdrawn that is or would be subject to CDSC under the standard CDSC schedule applicable to the contract. The recaptured amount will be taken proportionately from each

investment option as allocated at the time of the withdrawal.

b. Similar to the Original Contracts, under the New Contracts, Nationwide will not recapture Credits: (i) Upon annuitization of the contract; (ii) when a death benefit becomes payable; (iii) if distributions are taken in order to meet minimum distribution requirements under the Code; and (iv) if free withdrawals are taken pursuant to an age-based systematic withdrawal program.

c. Similar to the Original Contracts, all Credits applied to the New Contracts are considered earnings, not purchase payments.

d. Similar to the Original Contacts, under the New Contracts, at the end of the 7th contract year, Credits are fully vested and are no longer subject to recapture.

e. Similar to the Original Contracts, under the New Contracts, the charge associated with the Extra Value Option will no longer be assessed after the end of the 7th contract year for Contracts A, B, and C, and after the end of the 8th contract year for Contract D. To remove the rider option charge, Nationwide will replace the class of sub-account units corresponding to total variable account charges that include the rider option charge with another class of sub-account units associated with total variable account charges without the rider option charge. The latter class of units will have a greater individual unit value than the original class. Therefore, a reduction in the number of units is necessary to ensure that the contract value remains the same as it was prior to the removal of the charge.

From the date of the removal forward, the variable account value will be calculated using the class of sub-account unit values that do not reflect the rider option charge. Thus, the charge for that option is no longer assessed in the daily sub-account valuation for the contract.

10. Applicants seek an amendment to the Order, pursuant to section 6(c) of the 1940 Act, for exemption from sections 2(a)(32), 22(c) and 27(i)(2)(A) of the 1940 Act and Rule 22c–1 thereunder to the extent necessary to permit Nationwide to issue contracts from the Nationwide Variable Account-II and the Other Separate Accounts that:

a. provide for the recapture of Purchase Payment Credits upon a contract owner's cancellation of the contract pursuant to the contractual free-look provisions; and

b. provide for the recapture of 3% and 4% Credits for 7 contract years, regardless of whether the contract owner elects a CDSC-reducing option.

Applicants' Legal Analysis

1. Section 6(c) of the 1940 Act authorizes the Commission to exempt any person, security or transaction, or any class or classes of persons, securities or transactions from the provisions of the 1940 Act and the rules promulgated thereunder if and to the extent that such exemption is necessary or appropriate in the public interest and consistent with the protection of investors and the purposes fairly intended by the policy and provisions of the 1940 Act. Applicants request that the Commission issue an order pursuant to section 6(c) of the 1940 Act granting the exemptions outlined herein with respect to the New Contracts funded by VA–II that are issued by Nationwide and underwritten or distributed by NISC. Applicants also request the relief under the order to extend to any of the Other Separate Accounts of Nationwide and to any other NASD registered broker/dealers under common control with Nationwide which may in the future serve as general distributor-principal underwriter of VA–II or Other Separate Accounts that offer or support variable annuity contracts that are substantially similar in all material respects to those described in the Application. Applicants represent that any such future contracts funded by VA–II or Other Separate Accounts will be substantially similar in all material respects to the New Contracts described herein. Applicants believe that the requested exemptions are appropriate in the public interest and consistent with the protection of investors and the purposes fairly intended by the policy and provisions of the 1940 Act.

2. Applicants represents that the charges associated with the respective Extra Value Options are consistent with the requirements of section 26(e)(A)(2) of the 1940 Act. Section 26(e)(A)(2) provides that it is unlawful for registered separate accounts or sponsoring insurance companies to sell any variable insurance contract ''unless the fees and charges deducted under the contract, in the aggregate, are reasonable in relation to the services rendered, the expenses expected to be incurred, and the risks assumed by the insurance company.'' Because the Credits associated with the Extra Value Options will be funded from Nationwide's general account, the Credits create an expense for Nationwide. In addition, the risk of not recovering that expense is substantial in light of the fact that under several different contingencies, the Credit will be fully or partially vested, and thus may be withdrawn from the contract, long before the expense associated with furnishing the Credit has been recouped. Accordingly, Applicants represent that the charges associated with the Extra Value Options, in addition to the basic Variable Account Charge applicable to each contract, are reasonable and therefore consistent with the requirements of section 26(e)(2)(A) of the 1940 Act. A similar representation will be made in the registration statements for the contracts, as required under section 26(e)(2)(A). Applicants also submit that the risk of not recovering the expense associated with rider options is substantially diminished if the contract value, including the Credit, is not surrendered or otherwise distributed prior to the end of the 7th contract year. Thus, the elimination of the rider option charge is entirely warranted and will benefit contract owners.

3. Applicants represent that it is not administratively feasible to track the Credit amounts in VA–II after the Credits are applied. Accordingly, the asset-based charges associated with the Extra Value Options will be assessed against the entire amounts held in VA–II for 7 contract years for Contracts A, B, and C, and for 8 contract years for Contract D.

4. Subsection (i) of section 27 provides that section 27 does not apply to any registered separate account funding variable insurance contracts, or to the sponsoring insurance company and principal underwriter of such account, except as provided in paragraph (2) of the subsection. Paragraph (2) provides that it shall be unlawful for any registered separate account funding variable insurance contracts or a sponsoring insurance company of such account to sell a contract funded by the registered separate account unless, among other things, such contract is a redeemable security. Section 2(a)(32) defines ''redeemable security'' as any security, other than short-term paper, under the terms of which the holder, upon presentation to the issuer, is entitled to receive approximately his or her proportionate share of the issuer's current net assets, or the cash equivalent thereof.

5. Applicants submit that recapturing the Credit will not deprive an owner of his or her proportionate share of VA–II's current net assets. Applicants state that an owner's interest in the Credit allocated to his or her contract value is not entirely vested until the end of the 7th contract year. Until the Credit is vested, Applicants submit that Nationwide retains the right and interest in the Credit, although not in any earnings attributable to the Credit.

Applicants argue that when Nationwide recaptures a Credit, it is merely retrieving its own assets and the contract owner is not deprived of his or her proportionate share of separate account assets because his/her interest in the Credit has not vested.

6. Furthermore, Applicants state that permitting a contract owner to retain the Credit upon cancellation of the contract pursuant to the contractual free-look privilege would be unfair and would encourage individuals to purchase a contract with the intention of retaining the credited amount for an unjustified profit at Nationwide's expense. Furthermore, the recapture of the Credit is designed to protect Nationwide when a contract owner takes partial or full surrender of the contract shortly after the Credit is applied, leaving Nationwide insufficient time to recover the cost of the Credit.

7. Applicants assert that the Extra Value Option will be attractive to and in the interest of investors because it will permit owners to have an additional 3% or 4% of purchase payments remitted during the first twelve months invested in selected investment options from the date the purchase payment is received. Also, any earnings attributable to the Credit will be retained by the contract owner in addition to the principal amount of the Credit, provided the contingencies set forth in this Application are satisfied. Finally, Applicants believe that the Extra Value Option will be particularly attractive to and in the interest of long-term investors due to the elimination of the charge after 7 contract years for Contracts A, B, and C, and after 8 contract years for Contract D. Applicants assert that the elimination of the Extra Value Option charge will allow prospective purchasers to assess the value of the Extra Value Option, and elect or decline it, based on their particular circumstances, preferences and expectations.

8. Applicants submit that recapturing the Purchase Payment Credit will not deprive an owner of his or her proportionate share of VA–II's current net assets. Applicants state that an owner's interest in the Purchase Payment Credit allocated to his or her contract value is not entirely vested until the end of the contractual free-look period. Until the Purchase Payment Credit is vested, Applicants submit that Nationwide retains the right and interest in the Purchase Payment Credit, although not in any earnings attributable to the Purchase Payment Credit. Applicants argue that when Nationwide recaptures a Purchase Payment Credit, it is merely retrieving its own assets, and the contract owner is not deprived of his or her proportionate share of separate account assets because his/her interest in the Purchase Payment Credit has not vested.

9. Furthermore, Applicants state that permitting a contract owner to retain the Purchase Payment Credit upon cancellation of the contract pursuant to the contractual free-look privilege would be unfair and would encourage individuals to purchase a contract with the intention of retaining the credited amount for an unjustified profit at Nationwide's expense.

10. Applicants assert that Purchase Payment Credits recognize the efficiencies associated with issuing and administering contracts with higher aggregate purchase payments, and are thus attractive to, and in the best interest of, certain purchasers.

11. Applicants submit that the provisions for recapture of the Credit and the Purchase Payment Credit under the contracts do not violate section 2(a)(32) and 27(i)(2)(A) of the 1940 Act. Nevertheless, to avoid any possible uncertainties, Applicants request an exemption from those sections, to the extent deemed necessary to permit the recapture of any Credit or Purchase Payment Credit under the circumstances described herein with respect to the New Contracts and any future contracts issued in conjunction with VA–II or any Other Separate Accounts without loss of the relief from section 27 provided by section 27(i).

12. Section 22(c) of the 1940 Act authorizes the Commission to make rules and regulations applicable to registered investment companies and to principal underwriters of, and dealers in, the redeemable securities of any registered investment company to accomplish the same purposes as contemplated by section 22(a). Rule 22c–1 thereunder prohibits a registered investment company issuing any redeemable security, a person designated in such issuer's prospectus as authorized to consummate transactions in any such security, and a principal underwriter of, or dealer in, such security, from selling, redeeming, or repurchasing any such security except at a price based on the current net asset value of such security which is next computed after receipt of a tender of such security for redemption or of an order to purchase or sell such security.

13. It could be argued that Nationwide's recapture of the Credit and/or the Purchase Payment Credit constitutes a redemption of securities for a price other than one based on the current net asset value of the separate accounts. Applicants contend, however, that recapture of these credits does not violate section 22(c) and Rule 22c–1. Applicants argue that such recapture does not involve either of the evils or harmful events that Rule 22c–1 was intended to eliminate or reduce, namely: (1) The dilution of the value of outstanding redeemable securities of registered investment companies through their sale at a price below net asset value or their redemption or repurchase at a price above it, and (2) other unfair results including speculative trading practices. These evils were the result of backward pricing, the practice of pricing a mutual fund share based on the per share net asset value determined as of the close of the market on the previous day. Backward pricing diluted the value of outstanding mutual fund shares by allowing investors to take advantage of increases or decreases in net asset value that were not yet reflected in the mutual fund share price. Applicants submit that the recapture of Credits and Purchase Payment Credits described herein does not pose such a threat of dilution. To recapture any credit, Nationwide will redeem contract owners' interests in the sub-accounts at a price determined on the basis of current sub-account accumulation unit values. In no event will the amount recaptured be more than the amount of the Credit or Purchase Payment Credit that Nationwide paid out of its general account. Although Contract owners will be entitled to retain any investment gain attributable to a credit, the amount of such gain will be determined on the basis of the current net asset value of the respective sub-account. Thus, no dilution will occur upon the recapture of the Credit or Purchase Payment Credit.

14. Applicants also submit that the second harm that Rule 22c–1 was designed to address, namely, speculative trading practices calculated to take advantage of backward pricing, will not occur as a result of the recapture of the Credit or Purchase Payment Credit.

15. To avoid any uncertainty as to full compliance with the 1940 Act, Applicants request an exemption from the provisions of section 22(c) and Rule 22c–1 to the extent deemed necessary to permit them to recapture the Credit and the Purchase Payment Credit under the contracts and any future contracts (that are substantially similar in all material respects to the contracts described herein) issued in conjunction with VA–II or any Other Separate Accounts.

Conclusion

Applicants submit that their request for an amended Order is appropriate in the public interest. Applicants state that such an amended Order would promote competitiveness in the variable annuity market by eliminating the need to file redundant exemptive applications, thereby reducing administrative expenses and maximizing the efficient use of Applicants' resources. Applicants argue that investors would not receive any benefit or additional protection by requiring Applicants to repeatedly seek exemptive relief that would present no issue under the 1940 Act that has not already been addressed in the Application described herein. Applicants submit that filing additional applications would impair their ability to effectively take advantage of business opportunities as they arise. Furthermore, Applicants state that if they were repeatedly required to seek exemptive relief with respect to the same issues addressed in the Application described herein, investors would not receive any benefit or additional protection thereby.

Applicants further submit, based on the grounds summarized above, that their exemptive request meets the standards set out in section 6(c) of the 1940 Act, namely, that the exemptions requested are necessary or appropriate in the public interest and consistent with the protection of investors and the purposes fairly intended by the policy and provisions of the 1940 Act, and that, therefore, the Commission should grant the requested amended Order.

For the Commission, by the Division of Investment Management, pursuant to delegated authority.

Margaret H. McFarland,

Deputy Secretary.

[FR Doc. 03–2168 Filed 1–29–03; 8:45 am]

BILLING CODE 8010–01–M

SECURITIES AND EXCHANGE COMMISSION

[Release No. 34–47240; File No. SR–NASD–2002–113]

Self-Regulatory Organizations; National Association of Securities Dealers, Inc; Order Granting Approval of Proposed Rule Change Relating to the Implementation of a Fingerprinting Program for Nasdaq Employees and Independent Contractors

January 23, 2003.

On August 16, 2002, the National Association of Securities Dealers, Inc. (''NASD'' or ''Association''), through its subsidiary, The Nasdaq Stock Market, Inc. (''Nasdaq''), filed with the Securities and Exchange Commission (''SEC'' or ''Commission''), pursuant to section 19(b)(1) of the Securities Exchange Act of 1934 (''Act'') [1] and Rule 19b–4 thereunder,[2] a proposed rule change to establish a program for conducting fingerprint-based background checks of Nasdaq employees and independent contractors. On September 10, 2002, Nasdaq submitted an amendment to the proposed rule change.[3] The proposed rule change, as amended, was published for comment in the **Federal Register** on December 16, 2002.[4] The Commission received no comments on the proposal.

After careful review, the Commission finds that the proposed rule change, as amended, is consistent with the requirements of the Act and the rules and regulations thereunder,[5] and, in particular, the requirements of section 15A of the Act [6] and the rules and regulations thereunder. The Commission finds specifically that the proposed rule change is consistent with sections 15A(b)(2) and 15A(b)(6) of the Act.[7] Section 15A(b)(2) [8] requires that the Association have the capacity to enforce compliance by its members and persons associated with its members with the federal securities laws and the rules of the Association. Section 15A(b)(6) [9] requires, among other things, that the NASD's rules be designed to prevent fraudulent and manipulative acts and practices, to promote just and equitable principles of trade, and, in general, to protect investors and the public interest.

The Commission believes that the proposed rule change, as amended, promotes the objectives of these sections of the Act. The Commission notes that Nasdaq is an important component of the National Market System and that a serious disruption in the operation of Nasdaq systems could have a significant deleterious impact on the U.S. and global financial markets. The proposed rule change will promote the objectives of the Act by establishing procedures that should help prevent a serious disruption to Nasdaq systems. Specifically, the proposal should provide Nasdaq with an effective tool for identifying and excluding individuals whose prior criminal activities may pose a threat to the security of Nasdaq operations.[10]

It is therefore ordered, pursuant to section 19(b)(2) of the Act,[11] that the proposed rule change, as amended, (File No. SR–NASD–2002–113) be, and it hereby is, approved.

For the Commission, by the Division of Market Regulation, pursuant to delegated authority.[12]

Margaret H. McFarland,

Deputy Secretary.

[FR Doc. 03–2169 Filed 1–29–03; 8:45 am]

BILLING CODE 8010–01–P

[1]

[2] 17 CFR 240.19b–4.

[3] *See* September 9, 2002 letter from Mary M. Dunbar, Vice President and Deputy General Counsel, Nasdaq, to Katherine A. England, Assistant Director, Division of Market Regulation, Commission (''Amendment No. 1'').

[4] *See* Securities Exchange Act Release No. 46974 (December 9, 2002), 67 FR 77119 (''Notice'').

[5] In approving this proposed rule change, the Commission has considered the proposed rule's impact on efficiency, competition, and capital formation. 15 U.S.C. 78c(f).

[6] 15 U.S.C. 78*o*–3.

[7] 15 U.S.C. 78*o*–3(b)(2) and 15 U.S.C. 78*o*–3(b)(6).

[8] 15 U.S.C. 78*o*–3(b)(2).

[9] 15 U.S.C. 78*o*–3(b)(6).

[10] As explicitly stated in the proposed rule language in the Notice, such identification and exclusion of individuals will be carried out by Nasdaq only when permitted by applicable law.

[11] 15 U.S.C. 78s(b)(2).

[12] 17 CFR 200.30–3(a)(12).

DEPARTMENT OF STATE

[Public Notice 4255]

Culturally Significant Objects Imported for Exhibition Determinations: ''Ernst Ludwig Kirchner: 1880–1938''

AGENCY: Department of State.

ACTION: Notice.

SUMMARY: Notice is hereby given of the following determinations: Pursuant to the authority vested in me by the Act of October 19, 1965 (79 Stat. 985; 22 U.S.C. 2459), Executive Order 12047 of March 27, 1978, the Foreign Affairs Reform and Restructuring Act of 1998 (112 Stat. 2681, *et seq.*; 22 U.S.C. 6501 note, *et seq.*), Delegation of Authority No. 234 of October 1, 1999, and Delegation of Authority No. 236 of October 19, 1999, as amended, I hereby determine that the object to be included in the exhibition ''Ernst Ludwig Kirchner: 1880—1938,'' imported from abroad for temporary exhibition within the United States, is of cultural significance. The objects are imported pursuant to a loan agreement with the foreign owners. I also determine that the exhibition or display of the exhibit objects at the National Gallery of Art, Washington, DC from on or about March 2, 2003 to on or about June 1, 2003, and at possible additional venues yet to be determined, is in the national interest. Public Notice of these Determinations is ordered to be published in the **Federal Register**.

FOR FURTHER INFORMATION CONTACT: For further information, including a list of

the exhibit objects, contact Carol B. Epstein, Attorney-Adviser, Office of the Legal Adviser, U.S. Department of State, (telephone: 202/619–6981). The address is U.S. Department of State, SA–44, 301 4th Street, SW., Room 700, Washington, DC 20547–0001.

Dated: January 24, 2003.

Patricia S. Harrison,

Assistant Secretary for Educational and Cultural Affairs, Department of State.

[FR Doc. 03–2203 Filed 1–29–03; 8:45 am]

BILLING CODE 4710–08–P

DEPARTMENT OF STATE

[Public Notice 4254]

Culturally Significant Objects Imported for Exhibition Determinations: ''Van Gogh: Fields''

AGENCY: Department of State.

ACTION: Notice.

SUMMARY: Notice is hereby given of the following determinations: Pursuant to the authority vested in me by the Act of October 19, 1965 (79 Stat. 985; 22 U.S.C. 2459), Executive Order 12047 of March 27, 1978, the Foreign Affairs Reform and Restructuring Act of 1998 (112 Stat. 2681, *et seq.*; 22 U.S.C. 6501 note, *et seq.*), Delegation of Authority No. 234 of October 1, 1999, and Delegation of Authority No. 236 of October 19, 1999, as amended, I hereby determine that the object to be included in the exhibition ''Van Gogh: Fields,'' imported from abroad for temporary exhibition within the United States, is of cultural significance. The objects are imported pursuant to a loan agreement with the foreign owners. I also determine that the exhibition or display of the exhibit objects at The Toledo Museum of Art, Toledo, OH from on or about February 21, 2003 to on or about May 18, 2003, and at possible additional venues yet to be determined, is in the national interest. Public Notice of these Determinations is ordered to be published in the **Federal Register**.

FOR FURTHER INFORMATION CONTACT: For further information, including a list of the exhibit objects, contact Carol B. Epstein, Attorney-Adviser, Office of the Legal Adviser, U.S. Department of State, (telephone: 202/619–6981). The address is U.S. Department of State, SA–44, 301 4th Street, SW., Room 700, Washington, DC 20547–0001.

Dated: January 24, 2003.

Patricia S. Harrison,

Assistant Secretary for Educational and Cultural Affairs, Department of State.

[FR Doc. 03–2204 Filed 1–29–03; 8:45 am]

BILLING CODE 4710–08–P

DEPARTMENT OF STATE

[Public Notice 4256]

In the Matter of the Designation of Lashkar i Jhangvi as a Foreign Terrorist Organization Pursuant to Section 219 of the Immigration and Nationality Act

Based upon a review of the Administrative Record assembled in this matter and in consultation with the Attorney General and the Secretary of the Treasury, I conclude that there is a sufficient factual basis to find that the relevant circumstances described in section 219 of the Immigration and Nationality Act, as amended (hereinafter ''INA''), exist with respect to Lashkar i Jhangvi. Therefore, I intend to designate that organization as a foreign terrorist organization pursuant to section 219(a) of the INA.

This designation shall be published in the **Federal Register**.

Dated: January 21, 2003.

Colin L. Powell,

Secretary of State, Department of State.

[FR Doc. 03–2201 Filed 1–29–03; 5:00 pm]

BILLING CODE 4710–10–P

TENNESSEE VALLEY AUTHORITY

Paperwork Reduction Act of 1995, as Amended by Public Law 104–13; Submission for OMB review; Comment Request

AGENCY: Tennessee Valley Authority.

ACTION: Submission for OMB review; comment request.

SUMMARY: The proposed information collection described below will be submitted to the Office of Management and Budget (OMB) for review, as required by the Paperwork Reduction Act of 1995 (44 U.S.C chapter 35, as amended). The Tennessee Valley Authority is soliciting public comments on this proposed collection as provided by 5 CFR 1320.8(d)(1). Requests for information, including copies of the information collection proposed and supporting documentation, should be directed to the Agency Clearance Officer: Wilma H. McCauley, Tennessee Valley Authority, 1101 Market Street (EB 5B), Chattanooga, Tennessee 37402–2801; (423) 751–2523.

Comments should be sent to OMB Office of Information & Regulatory Affairs, Attention: Desk Officer for Tennessee Valley Authority, no later than March 3, 2003.

SUPPLEMENTARY INFORMATION:

Type of Request: Regular Submission, new collection of information.

Title of Information Collection: TVA Accounts Payable Customer Satisfaction Survey.

Frequency of Use: On occasion.

Small Business or Organizations Affected: Yes.

Estimated Number of Annual Responses: 2,000.

Estimated Total Annual Burden Hours: 200.

Estimated Average Burden Hours Per Response: 10 minutes.

Need for and Use of Information: This information collection will be distributed by e-mail to TVA's suppliers that receive remittance information by e-mail. The information collected will be used to evaluate current performance of the Accounts Payable Department (APD) which will identify areas for improvement and enable APD to provide better service to suppliers and facilitate commerce between TVA and its suppliers.

Jacklyn J. Stephenson,

Senior Manager, Enterprise Operations, Information Services.

[FR Doc. 03–2155 Filed 1–29–03; 8:45 am]

BILLING CODE 8120–08–P

DEPARTMENT OF TRANSPORTATION

Federal Aviation Administration

RTCA Special Committee 200/ EUROCAE Working Group 60: Modular Avionics, Second Joint Plenary Meeting

AGENCY: Federal Aviation Administration (FAA), DOT.

ACTION: Notice of RTCA Special Committee 200/EUROCAE Working Group 60 meeting.

SUMMARY: The FAA is issuing this notice to advise the public of a meeting of RTCA Special Committee 200/ EUROCAE Working Group 60: Modular Avionics.

DATES: The meeting will be held February 19–21, 2003 starting at 9 am.

ADDRESSES: The meeting will he held at RTCA, Inc., 1828 L Street, NW., Suite 805, Washington, DC 20036.

FOR FURTHER INFORMATION CONTACT: (1) RTCA Secretariat, 1828 L Street, NW., Suite 805, Washington, DC, 20036; telephone (202) 833–9339; fax (202) 833–9434; Web site *http://www.rtca.org.*

SUPPLEMENTARY INFORMATION: Pursuant to section 10(a)(2) of the Federal Advisory Committee Act (Pub. L. 92–463, 5 U.S.C. appendix 2), notice is hereby given for a Special Committee 200/EUROCAE Working Group 60 meeting. The agenda will include:

- February 19:
  - Opening Plenary Session (Welcome and Introductory Remarks, Review Agenda Review/Approve previous Common Plenary Summary, Review Open Action Items)
  - Report on Subgroup Activities since Joint Meeting Number 1
  - Plenary review of Document Outline
  - Plenary review of Glossary
- February 20:
  - Subgroups 1–3 form and work in individual meetings
- February 21:
  - Report of Subgroup 1–3 meetings
  - Closing Plenary Session (Review Action Items, Date and Place of Next Meeting, Adjourn)

Attendance is open to the interested public but limited to space availability. With the approval of the chairmen, members of the public may present oral statements at the meeting. Persons wishing to present statements or obtain information should contact the person listed in the **FOR FURTHER INFORMATION CONTACT** section. Members of the public may present a written statement to the committee at any time.

Issued in Washington, DC, on January 23, 2003.

Janice L. Peters,

FAA Special Assistant, RTCA Advisory Committee.

[FR Doc. 03–2187 Filed 1–29–03; 8:45 am]

BILLING CODE 4910–13–M

DEPARTMENT OF TRANSPORTATION

Federal Aviation Administration

[Policy Statement No. ANM–01–115–11]

Certification of Strengthened Flightdeck Doors on Transport Category Airplanes

AGENCY: Federal Aviation Administration (FAA), DOT.

ACTION: Notice of final policy.

SUMMARY: The Federal Aviation Administration (FAA) announces the availability of final policy concerning certification of strengthened flightdeck doors.

DATES: This final policy was issued by the Transport Airplane Directorate on September 6, 2002.

FOR FURTHER INFORMATION CONTACT: Jeff Gardlin, Federal Aviation Administration, Transport Airplane Directorate, Transport Standards Staff, Airframe/Cabin Safety Branch, ANM–115, 1601 Lind Avenue SW., Renton, WA 98055–4056; telephone (425) 227–2136; fax (425) 227–1320; e-mail: *jeff.gardlin@faa.gov.*

SUPPLEMENTARY INFORMATION:

Discussion of Comments

A notice of final policy; request for comments was published in the **Federal Register** on May 16, 2001 (66 FR 27196). One comment was received that did not address the policy statement so much as the applicability of the rule itself. No changes were made to the policy statement.

Background

The final policy provides all transport category airplane programs an acceptable method of compliance with 14 CFR part 25 for intrusion resistance and ballistic protection of flightdeck doors. The Frequently Asked Questions (FAQ) section has also been updated.

The final policy as well as the disposition of public comments are available on the Internet at the following address: *http://www.faa.gov/certification/aircraft/anminfo/finalpaper.cfm.* If you do not have access to the Internet, you can obtain a copy of the policy by contacting the person listed under **FOR FURTHER INFORMATION CONTACT.**

Issued in Renton, Washington, on January 17, 2003.

Vi L. Lipski,

Manager, Transport Airplane Directorate, Aircraft Certification Service.

[FR Doc. 03–2188 Filed 1–29–03; 8:45 am]

BILLING CODE 4910–13–P

DEPARTMENT OF TRANSPORTATION

Maritime Administration

[Docket No. MARAD–2003–14370]

Information Collection Available for Public Comments and Recommendations

ACTION: Notice and Request for Comments.

SUMMARY: In accordance with the Paperwork Reduction Act of 1995, this notice announces the Maritime Administration's (MARAD's) intentions to request extension of approval for three years of a currently approved information collection.

DATES: Comments should be submitted on or before March 31, 2003.

FOR FURTHER INFORMATION CONTACT: Taylor E. Jones II, Maritime Administration (MAR–630), 400 Seventh St., SW., Washington, DC 20590. Telephone: 202–366–2323; FAX: 202–493–2180, or e-mail: *taylor.jones@marad.dot.gov.* Copies of this collection also can be obtained from that office.

SUPPLEMENTARY INFORMATION:

Title of Collection: Voluntary Intermodal Sealift Agreement (VISA).

Type of Request: Extension of currently approved information collection.

OMB Control Number: 2133–0532.

Form Numbers: MA–1020.

Expiration Date of Approval: Three years after date of approval by the Office of Management and Budget.

Summary of Collection of Information. This information collection is in accordance with Section 708, Defense Production Act, 1950, as amended, under which participants agree to provide commercial sealift capacity and intermodal shipping services and systems necessary to meet national defense requirements. In order to meet national defense requirements, the government must assure the continued availability of commercial sealift resources.

Need and Use of the Information: The information collection is needed by MARAD and the Department of Defense (DOD), including representatives from the U.S. Transportation Command and its components, to evaluate and assess the applicants' eligibility for participation in the VISA program. The information will be used by MARAD and the U.S. Transportation Command, and its components, to assure the continued availability of commercial sealift resources to meet the DOD's military requirements.

Description of Respondents: Operators of qualified dry cargo vessels.

Annual Responses: 40.

Annual Burden: 200 hours.

Comments: Comments should refer to the docket number that appears at the top of this document. Written comments may be submitted to the Docket Clerk, U.S. DOT Dockets, Room PL–401, 400 Seventh Street, SW., Washington, D.C. 20590. Comments may also be submitted by electronic means via the Internet at *http://dmses.dot.gov/submit.* Specifically address whether this information collection is necessary for proper performance of the functions of the agency and will have practical utility, accuracy of the burden estimates, ways to minimize this burden, and ways to enhance the quality, utility, and clarity of the information to be collected. All comments received will be available for examination at the above address between 10 a.m. and 5 p.m. EDT (or EST), Monday through Friday, except Federal Holidays. An electronic version of this document is available on the World Wide Web at *http://dms.dot.gov.*

By order of the Maritime Administrator.

Dated: January 27, 2003.

Joel C. Richard,

Secretary, Maritime Administration.

[FR Doc. 03–2183 Filed 1–29–03; 8:45 am]

BILLING CODE 4910–81–P.

DEPARTMENT OF TRANSPORTATION

Maritime Administration

Reports, Forms and Recordkeeping Requirements Agency Information Collection Activity Under OMB Review

AGENCY: Maritime Administration, DOT.

ACTION: Notice and request for comments.

SUMMARY: In compliance with the Paperwork Reduction Act of 1995 (44 U.S.C. 3501 *et seq.*), this notice announces that the Information Collection abstracted below has been forwarded to the Office of Management and Budget (OMB) for review and approval. The nature of the information collection is described as well as its expected burden. The **Federal Register** Notice with a 60-day comment period soliciting comments on the following collection of information was published on October 31, 2002. No comments were received.

DATES: Comments must be submitted on or before March 3, 2003.

FOR FURTHER INFORMATION CONTACT: Joe Strassburg, Maritime Administration (MAR–782), 400 Seventh Street, SW., Washington, DC 20590. Telephone: 202–366–4161; FAX: 202–366–7901 or e-mail: *joe.strassburg@marad.dot.gov*. Copies of this collection also can be obtained from that office.

SUPPLEMENTARY INFORMATION: Maritime Administration (MARAD).

Title: Seamen's Claims' Administrative Action and Litigation.

OMB Control Number: 2133–0522.

Type of Request: Extension of currently approved collection.

Affected Public: Officers or members of a crew who suffered death, injury, or illness while employed on vessels owned or operated by the United States. Also included are surviving dependents, beneficiaries, and legal representatives of officers or crew members.

Form(s): None.

Abstract: The collection consists of information obtained from claimants for death, injury, or illness suffered while serving as officers or members of a crew on board a vessel owned or operated by the United States. The Maritime Administration reviews the information and makes a determination regarding agency liability and payments.

Annual Estimated Burden Hours: 1,875 hours.

ADDRESSES: Send comments to the Office of Information and Regulatory Affairs, Office of Management and Budget, 725 17th Street, NW., Washington, DC 20503, Attention MARAD Desk Officer.

Comments Are Invited on: (a) whether the proposed collection of information is necessary for the proper performance of the functions of the agency, including whether the information will have practical utility; (b) the accuracy of the agency's estimate of the burden of the proposed information collection; (c) ways to enhance the quality, utility and clarity of the information to be collected; and (d) ways to minimize the burden of the collection of information on respondents, including the use of automated collection techniques or other forms of information technology.

A comment to OMB is best assured of having its full effect if OMB receives it within 30 days of publication.

Issued in Washington, DC on January 24, 2003.

Joel C. Richard,

Secretary, Maritime Administration.

[FR Doc. 03–2184 Filed 1–29–03; 8:45 am]

BILLING CODE 4910–81–P

DEPARTMENT OF THE TREASURY

Departmental Offices; Notice of Availability of the Treasury Department's Annual Reports on Alternative Fuel Vehicle Acquisitions

AGENCY: Departmental Offices, Treasury.

ACTION: Notice.

SUMMARY: This notice advises the public how it may access the Treasury Department's annual reports on alternative fuel vehicle acquisitions for FY 1999–2001.

FOR FURTHER INFORMATION CONTACT: Carolyn Austin-Diggs, Director, Office of Asset Management, 202–622–0500 (not a toll-free call).

SUPPLEMENTARY INFORMATION: In accordance with section 8 of the Energy Policy Act, Pub. L. 105–388, as amended (42 U.S.C. 13218), the Department of the Treasury gives notice that the Department's annual reports on alternative fuel vehicle acquisitions for FY 1999–2001 are available at the following website: *http://www.treas.gov/offices/management/asset-management/personal-property/fleet-and-aviation.*

Dated: January 24, 2003.

Timothy L. Weatherford,

Acting Deputy Assistant Secretary of the Treasury.

[FR Doc. 03–2182 Filed 1–29–03; 8:45 am]

BILLING CODE 4810–25–P

DEPARTMENT OF VETERANS AFFAIRS

[OMB Control No. 2900–0570]

Proposed Information Collection Activity: Proposed Collection; Comment Request

AGENCY: Veterans Health Administration, Department of Veterans Affairs.

ACTION: Notice.

SUMMARY: The Veterans Health Administration (VHA) is announcing an opportunity for public comment on the proposed collection of certain information by the agency. Under the Paperwork Reduction Act (PRA) of 1995, Federal agencies are required to publish notice in the **Federal Register** concerning each proposed collection of information, including each proposed extension of a currently approved collection, and allow 60 days for public comment in response to the notice. This notice solicits comments on the burden estimates relating to customer satisfaction surveys.

DATES: Written comments and recommendations on the proposed collection of information should be received on or before March 31, 2003.

ADDRESSES: Submit written comments on the collection of information to Ann W. Bickoff (193B1), Department of Veterans Affairs, 810 Vermont Avenue, NW., Washington, DC 20420 or e-mail: *ann.bickoff@hq.med.va.gov.* Please refer to ''OMB Control No. 2900–0570'' in any correspondence.

FOR FURTHER INFORMATION CONTACT: Ann Bickoff at (202) 273–8310.

SUPPLEMENTARY INFORMATION: Under the PRA of 1995 (Public Law 104–13; 44 U.S.C., 3501–3520), Federal agencies must obtain approval from OMB for each collection of information they conduct or sponsor. This request for comment is being made pursuant to Section 3506(c)(2)(A) of the PRA.

With respect to the following collection of information, VHA invites comments on: (1) Whether the proposed collection of information is necessary for the proper performance of VHA's functions, including whether the information will have practical utility; (2) the accuracy of VHA's estimate of the burden of the proposed collection of

information; (3) ways to enhance the quality, utility, and clarity of the information to be collected; and (4) ways to minimize the burden of the collection of information on respondents, including through the use of automated collection techniques or the use of other forms of information technology.

Title: Generic Clearance for the Veterans Health Administration Customer Satisfaction Surveys.

OMB Control Number: 2900–0570.

Type of Review: Extension of a currently approved collection.

Abstract: Executive Order 12862, Setting Customer Service Standards, requires Federal agencies and departments to identify and survey its customers to determine the kind and quality of services they want and their level of satisfaction with existing services. VHA uses customer satisfaction surveys to gauge customer perceptions of VA services as well as customer expectations and desires. The results of these information collections lead to improvements in the quality of VHA service delivery by helping to shape the direction and focus of specific programs and services.

Affected Public: Individuals or households.

Estimated Annual Burden: 108,617 hours.

a. Special Emphasis Programs Conducted at Headquarters—72,882 hours.

b. Local Facilities Surveys (VA Medical Facilities)—35,735 hours.

Estimated Average Burden Per Respondent:

a. Special Emphasis Programs Conducted at Headquarters—18 minutes.

b. Local Facilities Surveys (VA Medical Facilities)—16 minutes.

Frequency of Response: Occasion.

Estimated Number of Respondents:

a. Special Emphasis Programs Conducted at Headquarters—241,312.

b. Local Facilities Surveys (VA Medical Facilities)—136,229.

Dated: January 15, 2003.

By direction of the Secretary.

Loise A. Russell,

Acting Director, Records Management Service.

[FR Doc. 03–2124 Filed 1–29–03; 8:45 am]

BILLING CODE 8320–01–P

DEPARTMENT OF VETERANS AFFAIRS

[OMB Control No. 2900–0013]

Proposed Information Collection Activity: Proposed Collection; Comment Request

AGENCY: Veterans Benefits Administration, Department of Veterans Affairs.

ACTION: Notice.

SUMMARY: The Veterans Benefits Administration (VBA), Department of Veterans Affairs (VA), is announcing an opportunity for public comment on the proposed collection of certain information by the agency. Under the Paperwork Reduction Act (PRA) of 1995, Federal agencies are required to publish notice in the **Federal Register** concerning each proposed collection of information, including each proposed extension of a currently approved collection, and allow 60 days for public comment in response to the notice. This notice solicits comments on the information needed to determine eligibility for issuance of a burial flag for a deceased veteran.

DATES: Written comments and recommendations on the proposed collection of information should be received on or before March 31, 2003.

ADDRESSES: Submit written comments on the collection of information to Nancy J. Kessinger, Veterans Benefits Administration (20S52), Department of Veterans Affairs, 810 Vermont Avenue, NW., Washington, DC 20420 or e-mail: *irmnkess@vba.va.gov.* Please refer to ''OMB Control No. 2900–0013'' in any correspondence.

FOR FURTHER INFORMATION CONTACT: Nancy J. Kessinger at (202) 273–7079 or FAX (202) 275–5947.

SUPPLEMENTARY INFORMATION: Under the PRA of 1995 (Public Law 104–13; 44 U.S.C., 3501–3520), Federal agencies must obtain approval from the Office of Management and Budget (OMB) for each collection of information they conduct or sponsor. This request for comment is being made pursuant to Section 3506(c)(2)(A) of the PRA.

With respect to the following collection of information, VBA invites comments on: (1) Whether the proposed collection of information is necessary for the proper performance of VBA's functions, including whether the information will have practical utility; (2) the accuracy of VBA's estimate of the burden of the proposed collection of information; (3) ways to enhance the quality, utility, and clarity of the information to be collected; and (4) ways to minimize the burden of the collection of information on respondents, including through the use of automated collection techniques or the use of other forms of information technology.

Title: Application for United States Flag for Burial Purposes, VA Form 21–2008.

OMB Control Number: 2900–0013.

Type of Review: Extension of a currently approved collection.

Abstract: VA Form 21–2008 is used to determine eligibility for issuance of a burial flag to a family member or friend of a deceased veteran.

Affected Public: Individuals or households, Federal Government and State, Local or Tribal Government.

Estimated Annual Burden: 162,500 hours.

Estimated Average Burden Per Respondent: 15 minutes.

Frequency of Response: One time.

Estimated Number of Respondents: 650,000.

Dated: January 15, 2003.

By direction of the Secretary.

Loise Russell,

Acting Director, Records Management Service.

[FR Doc. 03–2125 Filed 1–29–03; 8:45 am]

BILLING CODE 8320–01–P

DEPARTMENT OF VETERANS AFFAIRS

[OMB Control No. 2900–0112]

Proposed Information Collection Activity: Proposed Collection; Comment Request

AGENCY: Veterans Benefits Administration, Department of Veterans Affairs.

ACTION: Notice.

SUMMARY: The Veterans Benefits Administration (VBA), Department of Veterans Affairs (VA), is announcing an opportunity for public comment on the proposed collection of certain information by the agency. Under the Paperwork Reduction Act (PRA) of 1995, Federal agencies are required to publish notice in the **Federal Register** concerning each proposed collection of information, including each proposed extension of a currently approved collection, and allow 60 days for public comment in response to the notice. This notice solicits comments for information needed to determine whether a veteran can be released from liability on a Government home loan.

DATES: Written comments and recommendations on the proposed

collection of information should be received on or before March 31, 2003.

ADDRESSES: Submit written comments on the collection of information to Nancy J. Kessinger, Veterans Benefits Administration (20S52), Department of Veterans Affairs, 810 Vermont Avenue, NW., Washington, DC 20420 or *mailto:irmnkess@vba.va.gov.* Please refer to ''OMB Control No. 2900–0112'' in any correspondence.

FOR FURTHER INFORMATION CONTACT: Nancy J. Kessinger at (202) 273–7079 or FAX (202) 275–5947.

SUPPLEMENTARY INFORMATION: Under the PRA of 1995 (Public Law 104–13; 44 U.S.C., 3501–3520), Federal agencies must obtain approval from the Office of Management and Budget (OMB) for each collection of information they conduct or sponsor. This request for comment is being made pursuant to Section 3506(c)(2)(A) of the PRA.

With respect to the following collection of information, VBA invites comments on: (1) Whether the proposed collection of information is necessary for the proper performance of VBA's functions, including whether the information will have practical utility; (2) the accuracy of VBA's estimate of the burden of the proposed collection of information; (3) ways to enhance the quality, utility, and clarity of the information to be collected; and (4) ways to minimize the burden of the collection of information on respondents, including through the use of automated collection techniques or the use of other forms of information technology.

Title: Statement of Holder or Servicer of Veteran's Loan, VA Form 26–559.

OMB Control Number: 2900–0112.

Type of Review: Extension of a currently approved collection.

Abstract: Veteran-borrowers may sell their homes subject to the existing VA-guaranteed mortgage lien without prior approval of VA if the commitment for the loan was made prior to March 1, 1988. However, if they request release from personal liability to the Government in the event of a subsequent default by a transferee, VA must determine that (1) loan payments are current; (2) the transferee will assume the veteran's legal liabilities in connection with the loan; and (3) the purchaser qualifies from a credit standpoint. A veteran-borrower may sell his or her home to a veteran-transferee. However, eligible transferees must meet all the requirements in addition to having sufficient available loan guaranty entitlement to replace the amount of entitlement used by the seller in obtaining the original loan.

Affected Public: Individuals or households, Business or other for profit.

Estimated Annual Burden: 1,167 hours.

Estimated Average Burden Per Respondent: 10 minutes.

Frequency of Response: On occasion.

Estimated Number of Respondents: 7,000.

Dated: January 16, 2003.

By direction of the Secretary.

Ernesto Castro,

Director, Records Management Service.

[FR Doc. 03–2126 Filed 1–29–03; 8:45 am]

BILLING CODE 8320–01–P

DEPARTMENT OF VETERANS AFFAIRS

[OMB Control No. 2900–0321]

Proposed Information Collection Activity: Proposed Collection; Comment Request

AGENCY: Veterans Benefits Administration, Department of Veterans Affairs.

ACTION: Notice.

SUMMARY: The Veterans Benefits Administration (VBA), Department of Veterans Affairs (VA), is announcing an opportunity for public comment on the proposed collection of certain information by the agency. Under the Paperwork Reduction Act (PRA) of 1995, Federal agencies are required to publish notice in the **Federal Register** concerning each proposed collection of information, including each proposed extension of a previously approved collection, and allow 60 days for public comment in response to the notice. This notice solicits comments for information needed to determine whether representatives of veterans service organization are authorized to have access to a beneficiary's claim file.

DATES: Written comments and recommendations on the proposed collection of information should be received on or before March 31, 2003.

ADDRESSES: Submit written comments on the collection of information to Nancy J. Kessinger, Veterans Benefits Administration (20S52), Department of Veterans Affairs, 810 Vermont Avenue, NW., Washington, DC 20420 or e-mail: *irmnkess@vba.va.gov.* Please refer to ''OMB Control No. 2900–0321'' in any correspondence.

FOR FURTHER INFORMATION CONTACT: Nancy J. Kessinger at (202) 273–7079 or FAX (202) 275–5947.

SUPPLEMENTARY INFORMATION: Under the PRA of 1995 (Public Law 104–13; 44 U.S.C., 3501–3520), Federal agencies must obtain approval from the Office of Management and Budget (OMB) for each collection of information they conduct or sponsor. This request for comment is being made pursuant to section 3506(c)(2)(A) of the PRA.

With respect to the following collection of information, VBA invites comments on: (1) Whether the proposed collection of information is necessary for the proper performance of VBA's functions, including whether the information will have practical utility; (2) the accuracy of VBA's estimate of the burden of the proposed collection of information; (3) ways to enhance the quality, utility, and clarity of the information to be collected; and (4) ways to minimize the burden of the collection of information on respondents, including through the use of automated collection techniques or the use of other forms of information technology.

Title: Appointment of Veterans Service Organization as Claimant's Representative, VA Form 21–22.

OMB Control Number: 2900–0321.

Type of Review: Extension of a previously approved collection.

Abstract: VA beneficiaries to appoint a representative from a recognized veterans service organization to represent them in the prosecution of their VA claims, must complete VA Form 21–22. The information is used to determine who has access to the beneficiary's claim file and the right to receive copies of correspondence from VA to the beneficiary. Title 38, U.S.C. 5902(b)(2), provides that VA may recognize representatives of service organizations to assist beneficiaries in the prosecution of VA claims, but that no individual shall be recognized unless such individual has filed a power of attorney, executed in a manner prescribed by VA.

Affected Public: Individuals or households.

Estimated Annual Burden: 27,083 hours.

Estimated Average Burden Per Respondent: 5 minutes.

Frequency of Response: On occasion.

Estimated Number of Respondents: 325,000.

Dated: January 15, 2003.

By direction of the Secretary.

Loise A. Russell,

Acting Director, Records Management Service.

[FR Doc. 03–2127 Filed 1–29–03; 8:45 am]

BILLING CODE 8320–01–P

DEPARTMENT OF VETERANS AFFAIRS

[OMB Control No. 2900–0208]

Agency Information Collection Activities Under OMB Review

AGENCY: Veterans Health Administration, Department of Veterans Affairs.

ACTION: Notice.

SUMMARY: In compliance with the Paperwork Reduction Act (PRA) of 1995 (44 U.S.C., 3501 *et seq.*), this notice announces that the Veterans Health Administration (VHA), Department of Veterans Affairs, has submitted the collection of information abstracted below to the Office of Management and Budget (OMB) for review and comment. The PRA submission describes the nature of the information collection and its expected cost and burden; it includes the actual data collection instrument.

DATES: Comments must be submitted on or before March 3, 2003.

FOR FURTHER INFORMATION OR A COPY OF THE SUBMISSION CONTACT: Denise McLamb, Records Management Service (005E3), Department of Veterans Affairs, 810 Vermont Avenue, NW., Washington, DC 20420, (202) 273–8030, FAX (202) 273–5981 or e-mail: *denise.mclamb@mail.va.gov.* Please refer to ''OMB Control No. 2900–0208.''

Send comments and recommendations concerning any aspect of the information collection to VA's OMB Desk Officer, OMB Human Resources and Housing Branch, New Executive Office Building, Room 10235, Washington, DC 20503 (202) 395–7316. Please refer to ''OMB Control No. 2900–0208'' in any correspondence.

SUPPLEMENTARY INFORMATION:

Titles:

a. VA Form 10–6131, Daily Log—Formal Contract.

b. VA Form 10–6298, Architect—Engineer Fee Proposal.

OMB Control Number: 2900–0208.

Type of Review: Extension of a currently approved collection.

Abstract:

a. VA Form 10–6131 is used by contractors to record the data necessary to assure that sufficient labor and materials were used to accomplish the contract work.

b. VA Form 10–6298 is used by architect-engineering firms to submit a fee proposal to VA on the scope and complexity of an individual project.

An agency may not conduct or sponsor, and a person is not required to respond to a collection of information unless it displays a currently valid OMB control number. The **Federal Register** Notice with a 60-day comment period soliciting comments on this collection of information was published on October 15, 2002, at pages 63734–63735.

Affected Public: Business or other for-profit.

Estimated Annual Burden: 4,600 hours.

a. VA Form 10–6131—3,600.

b. VA Form 10–6298—1,000.

Estimated Average Burden Per Respondent:

a. VA Form 10–613—12 minutes.

b. VA Form 10–6298—4 hours.

Frequency of Response: On occasion.

Estimated Number of Respondents: 18,250.

a. VA Form 10–6131—18,000.

b. VA Form 10–6298—250.

Dated: January 14, 2003.

By direction of the Secretary.

Loise A. Russell,

Acting Director, Records Management Service.

[FR Doc. 03–2120 Filed 1–29–03; 8:45 am]

BILLING CODE 8320–01–P

DEPARTMENT OF VETERANS AFFAIRS

[OMB Control No. 2900–0121]

Agency Information Collection Activities Under OMB Review

AGENCY: Veterans Benefits Administration, Department of Veterans Affairs

ACTION: Notice.

SUMMARY: In compliance with the Paperwork Reduction Act (PRA) of 1995 (44 U.S.C., 3501 *et seq.*), this notice announces that the Veterans Benefits Administration (VBA), Department of Veterans Affairs, has submitted the collection of information abstracted below to the Office of Management and Budget (OMB) for review and comment. The PRA submission describes the nature of the information collection and its expected cost and burden; it includes the actual data collection instrument.

DATES: Comments must be submitted on or before March 3, 2003.

FOR FURTHER INFORMATION OR A COPY OF THE SUBMISSION CONTACT: Denise McLamb, Records Management Service (005E3), Department of Veterans Affairs, 810 Vermont Avenue, NW., Washington, DC 20420, (202) 273–8030, FAX (202) 273–5981 or e-mail: *denise.mclamb@mail.va.gov.* Please refer to ''OMB Control No. 2900–0121.''

Send comments and recommendations concerning any aspect of the information collection to VA's OMB Desk Officer, OMB Human Resources and Housing Branch, New Executive Office Building, Room 10235, Washington, DC 20503 (202) 395–7316. Please refer to ''OMB Control No. 2900–0121'' in any correspondence.

SUPPLEMENTARY INFORMATION:

Title: Obtaining Supplemental Information from Hospital or Doctor, VA FL 29–551b.

OMB Control Number: 2900–0121.

Type of Review: Extension of a currently approved collection.

Abstract: This form letter is used to request medical evidence from an insured's attending physician or hospital in connection with continuing disability insurance benefits.

An agency may not conduct or sponsor, and a person is not required to respond to a collection of information unless it displays a currently valid OMB control number. The **Federal Register** Notice with a 60-day comment period soliciting comments on this collection of information was published on November 1, 2002, at page 66710.

Affected Public: Individuals or households.

Estimated Annual Burden: 61 hours.

Estimated Average Burden Per Respondent: 15 minutes.

Frequency of Response: On occasion.

Estimated Number of Respondents: 244.

Dated: January 14, 2003.

By direction of the Secretary.

Loise A. Russell,

Acting Director, Records Management Service.

[FR Doc. 03–2121 Filed 1–29–03; 8:45 am]

BILLING CODE 8320–01–P

DEPARTMENT OF VETERANS AFFAIRS

[OMB Control No. 2900–0132]

Agency Information Collection Activities Under OMB Review

AGENCY: Veterans Benefits Administration, Department of Veterans Affairs

ACTION: Notice.

SUMMARY: In compliance with the Paperwork Reduction Act (PRA) of 1995 (44 U.S.C., 3501 *et seq.*), this notice announces that the Veterans Benefits Administration (VBA), Department of Veterans Affairs, has submitted the collection of information abstracted below to the Office of Management and Budget (OMB) for review and comment. The PRA submission describes the nature of the information collection and its expected cost and burden; it includes the actual data collection instrument.

DATES: Comments must be submitted on or before March 3, 2003.

FOR FURTHER INFORMATION CONTACT: Denise McLamb, Records Management Service (005E3), Department of Veterans Affairs, 810 Vermont Avenue, NW, or e-mail *denise.mclamb@mail.va.gov.* Please refer to ''OMB Control No. 2900–0132.''

Send comments and recommendations concerning any aspect of the information collection to VA's OMB Desk Officer, OMB Human Resources and Housing Branch, New Executive Office Building, Room 10235, Washington, DC 20503 (202) 395–7316. Please refer to ''OMB Control No. 2900–0132'' in any correspondence.

SUPPLEMENTARY INFORMATION:

Title: Veteran's Application in Acquiring Specially Adapted Housing or Special Home Adaptation Grant, VA Form 26–4555.

OMB Control Number: 2900–0132.

Type of Review: Extension of a currently approved collection.

Abstract: The form is used to gather the necessary information to determine a veteran's eligibility for specially adapted housing or the special home adaptation grant.

An agency may not conduct or sponsor, and a person is not required to respond to a collection of information unless it displays a currently valid OMB control number. The **Federal Register** Notice with a 60-day comment period soliciting comments on this collection of information was published on November 1, 2002, at page 66711.

Affected Public: Individuals or households.

Estimated Annual Burden: 250 hours.

Estimated Average Burden Per Respondent: 10 minutes.

Frequency of Response: On occasion.

Estimated Number of Total Respondents: 1,500.

Dated: January 14, 2003.

By direction of the Secretary.

Loise A. Russell,

Acting Director, Records Management Service.

[FR Doc. 03–2122 Filed 1–29–03; 8:45 am]

BILLING CODE 8320–01–P

DEPARTMENT OF VETERANS AFFAIRS

[OMB Control No. 2900–0610]

Agency Information Collection Activities Under OMB Review

AGENCY: Veterans Health Administration, Department of Veterans Affairs

ACTION: Notice.

SUMMARY: In compliance with the Paperwork Reduction Act (PRA) of 1995 (44 U.S.C., 3501 *et seq.*), this notice announces that the Veterans Health Administration (VHA), Department of Veterans Affairs, has submitted the collection of information abstracted below to the Office of Management and Budget (OMB) for review and comment. The PRA submission describes the nature of the information collection and its expected cost and burden; it includes the actual data collection instrument.

DATES: Comments must be submitted on or before March 3, 2003.

FOR FURTHER INFORMATION OR A COPY OF THE SUBMISSION CONTACT: Denise McLamb, Records Management Service (005E3), Department of Veterans Affairs, 810 Vermont Avenue, NW., Washington, DC 20420, (202) 273–8030, FAX (202) 273–5981 or e-mail: *denise.mclamb@mail.va.gov.* Please refer to ''OMB Control No. 2900–0610.''

Send comments and recommendations concerning any aspect of the information collection to VA's OMB Desk Officer, OMB Human Resources and Housing Branch, New Executive Office Building, Room 10235, Washington, DC 20503 (202) 395–7316. Please refer to ''OMB Control No. 2900–0610'' in any correspondence.

SUPPLEMENTARY INFORMATION:

Title: Ecclesiastical Endorsing Organization Verification/Reverification Information, VA Form 10–0379.

OMB Control Number: 2900–0610.

Type of Review: Extension of a currently approved collection.

Abstract: VA Form 10–0379 is used to assure that individuals employed by VA as chaplains are qualified to provide for the constitutional rights of veterans to free exercise of religion. Each applicant submits an official statement (''ecclesiastical endorsement'') from their religion or faith group, certifying that the applicant is in good standing with the faith group and is qualified to perform the full range of ministry required in VA setting. VA uses this information to determine (1) who the faith group designates as its endorsing official(s); (2) whether the faith group provides ministry to a lay constituency; and (3) what is the constituency to which person endorsed by this group may minister.

An agency may not conduct or sponsor, and a person is not required to respond to a collection of information unless it displays a currently valid OMB control number. The **Federal Register** Notice with a 60-day comment period soliciting comments on this collection of information was published on November 15, 2002, at pages 69303–69304.

Affected Public: Not-for-profit Institutions.

Estimated Annual Burden: 3 hours.

Estimated Average Burden Per Respondent: 15 minutes

Frequency of Response: One time.

Estimated Number of Respondents: 10

Dated: January 15, 2003.

By direction of the Secretary.

Loise A. Russell,

Acting Director, Records Management Service.

[FR Doc. 03–2123 Filed 1–29–03; 8:45 am]

BILLING CODE 8320–01–P

DEPARTMENT OF VETERANS AFFAIRS

Advisory Committee on Homeless Veterans; Notice of Meeting

The Department of Veterans Affairs (VA) gives notice under Public Law 92–463 (Federal Advisory Committee Act) that a meeting of the Advisory Committee on Homeless Veterans will be held from Thursday, February 20, 2003, through Friday, February 21, 2003, from 8:30 a.m. until 4 p.m. each day. The meeting will be held at the Department of Veterans Affairs, 810 Vermont Avenue, NW., Room 730, Washington, DC 20420. The meeting is open to the public.

The purpose of the Committee is to advise the Secretary of Veterans Affairs with an on-going assessment of the effectiveness of the policies, organizational structures, and services of the Department in assisting homeless veterans. The Committee shall assemble and review information relating to the needs of homeless veterans and provide on-going advice on the most appropriate means of providing assistance to homeless veterans. The Committee shall assemble and review information relating to the needs of homeless veterans and provide on-going advice on the most appropriate means of providing assistance to homeless veterans. The Committee will make recommendations to the Secretary regarding such activities.

On February 20, the Committee will review information about efforts to coordinate services and increase veteran access to homeless services from VA and other health and benefits programs and review new draft recommendations to assist veterans. On February 21, the Committee will continue its review and discussion of its draft recommendations to the Secretary.

Those wishing to attend the meeting should contact Mr. Pete Dougherty,

Department of Veterans Affairs, at (202) 273–5764. No time will be allocated for receiving oral presentations from the public. However, the Committee will accept written comments from interest parties on issues affecting homeless veterans. Such comments should be referred to the Committee at the following address: Advisory Committee on Homeless Veterans, Homeless Veterans Programs Office (075D), U.S. Department of Veterans Affairs, 810 Vermont Avenue, NW., Washington, DC 20420.

Dated: January 23, 2003.

By Direction of the Secretary.

Nora E. Egan,

Committee Management Officer.

[FR Doc. 03–2128 Filed 1–29–03; 8:45 am]

BILLING CODE 8320–01–M

Federal Register

Thursday,
January 30, 2003

Part II

Securities and Exchange Commission

17 CFR Parts 228, 229, et al.
Conditions for Use of Non-GAAP Financial Measures; Final Rule

SECURITIES AND EXCHANGE COMMISSION

17 CFR PARTS 228, 229, 244 and 249

[RELEASE NO. 33–8176; 34–47226; FR–65; FILE NO. S7–43–02]

RIN 3235–A169

Conditions for Use of Non-GAAP Financial Measures

AGENCY: Securities and Exchange Commission.

ACTION: Final rule.

SUMMARY: As directed by the Sarbanes-Oxley Act of 2002, we are adopting new rules and amendments to address public companies' disclosure or release of certain financial information that is calculated and presented on the basis of methodologies other than in accordance with generally accepted accounting principles (GAAP). We are adopting a new disclosure regulation, Regulation G, which will require public companies that disclose or release such non-GAAP financial measures to include, in that disclosure or release, a presentation of the most directly comparable GAAP financial measure and a reconciliation of the disclosed non-GAAP financial measure to the most directly comparable GAAP financial measure. We also are adopting amendments to Item 10 of Regulation S–K and Item 10 of Regulation S–B to provide additional guidance to those registrants that include non-GAAP financial measures in Commission filings. Additionally, we are adopting amendments to Form 20–F to incorporate into that form the amendments to Item 10 of Regulation S–K. Finally, we are adopting amendments that require registrants to furnish to the Commission, on Form 8–K, earnings releases or similar announcements.

DATES: Effective Date: March 28, 2003. Compliance Dates: Regulation G will apply to all subject disclosures as of March 28, 2003. The requirement to furnish earnings releases and similar materials to the Commission on Form 8–K will apply to earnings releases and similar announcements made after March 28, 2003. The amendments to Item 10 of Regulation S–K, Item 10 of Regulation S–B and Form 20–F will apply to any annual or quarterly report filed with respect to a fiscal period ending after March 28, 2003.

FOR FURTHER INFORMATION CONTACT: Joseph P. Babits or Craig Olinger, at (202) 942–2910, Division of Corporation Finance, U.S. Securities and Exchange Commission, 450 Fifth Street, NW., Washington, DC 20549–0402.

SUPPLEMENTARY INFORMATION: We are adopting new Regulation G.[1] We also are adopting amendments to Item 10 of Regulation S–K,[2] Item 10 of Regulation S–B,[3] and Securities Exchange Act of 1934[4] Forms 8–K[5] and 20–F.[6]

I. Background

On July 30, 2002, President Bush signed into law the Sarbanes-Oxley Act of 2002 (Sarbanes-Oxley Act).[7] As directed by Section 401(b) of the Sarbanes-Oxley Act, we published for comment a number of new rules and amendments to address the use of ''non-GAAP financial measures'' on November 4, 2002.[8] As discussed in that proposing release, the Commission has expressed concerns regarding the improper use of non-GAAP financial measures during the past 30 years.[9] The rules we adopt today reflect the letter and spirit of the Sarbanes-Oxley Act, our history in regulating non-GAAP financial measures, and the comments we received on the proposals.

We are adopting the proposals relating to the use of non-GAAP financial measures substantially as proposed.[10] The rules we adopt today, however, reflect the following changes from those proposals:

- *Regulation G—*
- Regulation G will not apply to a non-GAAP financial measure included in disclosure relating to a proposed business combination, the entity resulting therefrom or an entity that is a party thereto if the disclosure is contained in a communication that is subject to the communications rules applicable to business combination transactions;
- The safe harbor from the application of Regulation G for disclosure of non-GAAP financial measures by foreign private issuers outside of the United States will make clearer that Regulation G does not apply to written communications released in the United States, as well as outside the United States, so long as the communication is released in the United States contemporaneously with or after its release outside the United States and is not otherwise targeted at persons located in the United States;
- The reference to ''comparable [GAAP] financial measure or measures'' will read ''most directly comparable [GAAP] financial measure or measures''; and
- The definition of GAAP for purposes of financial measures prepared by foreign private issuers will be further clarified.
- *Item 10 of Regulation S–K and Item 10 of Regulation S–B—*
- These items will not include a prohibition on ''non-GAAP per share measures'' in documents filed with the Commission;[11]
- These items will not apply to a non-GAAP financial measure included in disclosure relating to a proposed business combination, the entity resulting therefrom or an entity that is a party thereto if the disclosure is contained in a communication that is subject to the communications rules applicable to business combination transactions;
- The reference to ''comparable [GAAP] financial measure or measures'' will read ''most directly comparable [GAAP] financial measure or measures'';
- The required quantitative reconciliation will include the same exception for forward-looking non-GAAP financial measures as in Regulation G;
- The measures EBIT (earnings before interest and taxes) and EBITDA (earnings before interest, taxes, depreciation, and amortization) will be exempted specifically from the prohibition on excluding charges or liabilities that required, or will require, cash settlement, or would have required cash settlement absent an ability to settle in another manner, from non-GAAP liquidity measures;
- The prohibition on adjusting a non-GAAP performance measure to eliminate or smooth items identified as non-recurring, infrequent or unusual, when the nature of the charge or gain is such that it is reasonably likely to recur will make clear that such an adjustment is prohibited only when (1) the nature of the charge or gain is such that it is reasonably likely to recur within two years,

[1] 17 CFR 244.100–244.102.

[2] 17 CFR 229.10.

[3] 17 CFR 228.10.

[4] 15 U.S.C. §§ 78a *et seq.*

[5] 17 CFR 249.308.

[6] 17 CFR 249.220.

[7] Pub. L. No. 107–204, 116 Stat. 745 (2002).

[8] See Release No. 33–8145 (Nov. 4, 2002) [67 FR 68490].

[9] See *Accounting Series Release No. 142,* Release No. 33–5337 (Mar. 15, 1973); *Cautionary Advice Regarding the Use of ''Pro Forma'' Financial Information,* Release No. 33–8039 (Dec. 4, 2001); and *In the Matter of Trump Hotels & Casino Resorts, Inc.,* Release No. 34–45287 (Jan. 16, 2002). We also note that the Financial Accounting Standards Board (FASB) has initiated a project called Financial Performance Reporting by Business Enterprises. The objective of the project is to ensure that users of financial statements have sufficient quality information in order to evaluate a company's performance. The project's focus includes the presentation of key performance measures, or information necessary to permit calculation of key financial measures, used by investors and creditors. However, it will not address non-GAAP measures in press releases or other communications outside financial statements.

[10] Regulation G and the amendments to our rules are intended to ensure that investors receive adequate information in evaluating a company's use of non-GAAP financial measures. In addition, having earnings announcements furnished on Form 8–K would provide the public a source of reference for obtaining a company's most recent statements regarding its financial condition. Therefore, we believe that the new rules and amendments are in the public interest and consistent with the protection of investors.

[11] While we have not included a prohibition on per share non-GAAP financial measures in Item 10 of Regulation S–K or Item 10 of Regulation S–B, per share measures that are prohibited specifically under GAAP or Commission rules continue to be prohibited in materials filed with or furnished to the Commission. See, for example, the prohibition on cash flow per share in paragraph 33 of FASB Statement No. 95, Statement of Cash Flows.

or (2) there was a similar charge or gain within the prior two years; and

• The definition of GAAP for purposes of financial measures prepared by foreign private issuers will be further clarified.

• *Definition of non-GAAP financial measures*—

• ''Non-GAAP financial measures'' will not include financial measures that are required to be disclosed by GAAP, Commission rules or a system of regulation that is applicable to a registrant.

• *Form 8–K*—

• The Form 8–K requirement with respect to earnings releases and similar announcements will require that those materials be ''furnished to,'' rather than ''filed with,'' the Commission.

II. The Rules and Amendments

A. Regulation G

We are adopting new Regulation G substantially as proposed. Regulation G will apply whenever a company publicly discloses or releases material information that includes a non-GAAP financial measure.[12]

1.Application

a. General Standard

Regulation G applies to any entity that is required to file reports pursuant to Sections 13(a) or 15(d) of the Exchange Act, other than a registered investment company.[13] Regulation G applies whenever such a registrant, or a person acting on its behalf, discloses publicly or releases publicly any material information that includes a non-GAAP financial measure.

b. Foreign Private Issuers

Regulation G applies to registrants that are foreign private issuers,[14] subject to a limited exception. Specifically, Regulation G does not apply to public disclosure of a non-GAAP financial measure by, or on behalf of, a registrant that is a foreign private issuer if:

• The securities of the foreign private issuer are listed or quoted on a securities exchange or inter-dealer quotation system outside the United States;

• The non-GAAP financial measure is not derived from or based on a measure calculated and presented in accordance with generally accepted accounting principles in the United States; and

• The disclosure is made by or on behalf of the foreign private issuer outside the United States, or is included in a written communication that is released by or on behalf of the foreign private issuer outside the United States.

These conditions focus on whether the financial measure relates to U.S. GAAP and whether the disclosure is made by or on behalf of the foreign private issuer outside of the United States. We believe these conditions appropriately take into account the interests of U.S. investors (including both the interests reflected in the Sarbanes-Oxley Act and the interest of receiving information that is communicated globally) and the interests of foreign private issuers in communicating globally, including in their home markets.

Therefore, we believe that the worldwide availability of information properly disclosed outside the United States and the interests of U.S. investors in information communicated by, or on behalf of, the issuer outside the United States dictate that the exception for foreign private issuers should continue to apply even where any one or more of the following circumstances are present:

• A written communication is released in the United States as well as outside the United States, so long as the communication is released in the United States contemporaneously with or after the release outside the United States and is not otherwise targeted at persons located in the United States;

• Foreign journalists, U.S. journalists or other third parties have access to the information;

• The information appears on one or more web sites maintained by the registrant, so long as the web sites, taken together, are not available exclusively to, or targeted at, persons located in the United States; or

• Following the disclosure or release of the information outside the United States, the information is included in a submission to the Commission made under cover of a Form 6–K.[15]

c. Disclosures Relating to Business Combination Transactions

As proposed, Regulation G would have applied to disclosures of non-GAAP financial measures that represent projections or forecasts of results of proposed business combination transactions. We sought comment specifically on this point, and several of the comment letters we received in response to the proposal argued strongly that Regulation G should not apply to these measures.[16] After consideration of the comments regarding the application of Regulation G to these disclosures, we are including in Regulation G an exception for non-GAAP financial measures included in disclosure relating to a proposed business combination transaction, the entity resulting from the business combination transaction, or an entity that is a party to the business combination transaction if the disclosure is contained in a communication that is subject to the Commission's communications rules applicable to business combination transactions.[17]

2. Non-GAAP Financial Measures

a. Definition

For purposes of Regulation G, a non-GAAP financial measure is a numerical measure of a registrant's historical or future financial performance, financial position or cash flows that:

• Excludes amounts, or is subject to adjustments that have the effect of excluding amounts, that are included in the most directly comparable measure calculated and presented in accordance with GAAP in the statement of income, balance sheet or statement of cash flows (or equivalent statements) of the issuer; or

• Includes amounts, or is subject to adjustments that have the effect of including amounts, that are excluded from the most directly comparable measure so calculated and presented.

In this regard, GAAP refers to generally accepted accounting principles in the United States.

The proposed version of Regulation G indicated that, with respect to foreign private issuers whose primary financial statements are prepared in accordance with non-U.S. generally accepted accounting principles, references to

[12] Section 401(b) of the Sarbanes-Oxley Act directs the Commission to adopt rules concerning the public disclosure or release of ''pro forma financial information'' by a company filing reports under Section 13(a) [15 U.S.C. § 78m(a)] or 15(d) [15 U.S.C. § 780(d)]. Because the Commission's rules and regulations address the use of ''pro forma financial information'' in other contexts, particularly in Regulation S–X, and use that term differently from its use in the Sarbanes-Oxley Act, we are adopting the term ''non-GAAP financial measures'' to identify the types of information targeted by Section 401(b) of the Sarbanes-Oxley Act.

[13] See Rule 101(c) of Regulation G [17 CFR 244.101(c)]. Registered investment companies are excluded from the definition of ''registrant'' for purposes of Regulation G, as Section 405 of the Sarbanes-Oxley Act exempts investment companies registered under Section 8 of the Investment Company Act of 1940 (15 U.S.C. § 80a–8) from Section 401 of the Sarbanes-Oxley Act and any rules adopted by the Commission under Section 401.

[14] ''Foreign private issuer'' is defined in Rule 405 [17 CFR 230.405] under the Securities Act 1933 [15 U.S.C. §§ 77a *et seq.*].

[15] 17 CFR 249.306.

[16] See, for example, the comment letters of the Association of the Bar of the City of New York, Special Committee on Mergers, Acquisitions, and Corporate Control Contests; Association of the Bar of the City of New York, Committee on Securities Regulation; Deloitte & Touche, LLP; and Cleary, Gottlieb, Steen & Hamilton.

[17] See Exchange Act Rules 14a–12 (17 CFR 240.14a–12) and 14d–2 (17 CFR 240.14d–2), Securities Act Rules 165 (17 CFR 230.165) and 425 (17 CFR 230.425), and Item 1015 of Regulation M–A (17 CFR 229.1015).

GAAP would ''also include'' the principles under which those primary financial statements are prepared. Commenters expressed the concern that the words ''also include'' meant that foreign private issuers would have to reconcile the non-GAAP financial measure to both GAAP in their home country and U.S. GAAP.[18] As adopted, Regulation G clarifies this issue. First, in the case of foreign private issuers whose primary financial statements are prepared in accordance with non-U.S. generally accepted accounting principles, Regulation G makes clear that GAAP refers to the principles under which those primary financial statements are prepared. Second, in the case of foreign private issuers that include a non-GAAP financial measure derived from or based on a measure calculated in accordance with U.S. generally accepted accounting principles, Regulation G makes clear that GAAP refers to U.S. generally accepted accounting principles for purposes of the application of the requirements of Regulation G to the disclosure of that measure.

b. Discussion of the Definition

We do not intend the definition of ''non-GAAP financial measures'' to capture measures of operating performance or statistical measures that fall outside the scope of the definition set forth above. As such, non-GAAP financial measures do not include:

- Operating and other statistical measures (such as unit sales, numbers of employees, numbers of subscribers, or numbers of advertisers); and
- Ratios or statistical measures that are calculated using exclusively one or both of:
- Financial measures calculated in accordance with GAAP; and
- Operating measures or other measures that are not non-GAAP financial measures.

Non-GAAP financial measures do not include financial information that does not have the effect of providing numerical measures that are different from the comparable GAAP measure. Examples of measures to which Regulation G does not apply include the following:

- Disclosure of amounts of expected indebtedness, including contracted and anticipated amounts;
- Disclosure of amounts of repayments that have been planned or decided upon but not yet made;
- Disclosure of estimated revenues or expenses of a new product line, so long as such amounts were estimated in the same manner as would be computed under GAAP; and
- Measures of profit or loss and total assets for each segment required to be disclosed in accordance with GAAP.[19]

We do intend that the definition of non-GAAP financial measure capture all measures that have the effect of depicting either:

- A measure of performance that is different from that presented in the financial statements, such as income or loss before taxes or net income or loss, as calculated in accordance with GAAP; or
- A measure of liquidity that is different from cash flow or cash flow from operations computed in accordance with GAAP.

An example of a non-GAAP financial measure would be a measure of operating income[20] that excludes one or more expense or revenue items that are identified as ''non-recurring.'' Another example would be EBITDA, which could be calculated using elements derived from GAAP financial presentations but, in any event, is not presented in accordance with GAAP. Examples of ratios and measures that would not be non-GAAP financial measures would include sales per square foot (assuming that the sales figure was calculated in accordance with GAAP) or same store sales (again assuming the sales figures for the stores were calculated in accordance with GAAP).

An example of a ratio that would not be a non-GAAP financial measure would be a measure of operating margin that is calculated by dividing revenues into operating income, where both revenue and operating income are calculated in accordance with GAAP. Conversely, an example of a ratio that would be a non-GAAP financial measure would be a measure of operating margin that is calculated by dividing revenues into operating income, where either revenue or operating income, or both, were not calculated in accordance with GAAP.

We received comment regarding the exclusion of financial measures used for regulatory purposes from the definition.[21] In response to these comments, we have provided an exclusion from the definition of ''non-GAAP financial measure'' for financial measures required to be disclosed by GAAP, Commission rules, or a system of regulation of a government or governmental authority or self-regulatory organization that is applicable to the registrant. Examples of such financial measures would include measures of capital or reserves calculated for such a regulatory purpose.

3. Requirements of Regulation G

Regulation G contains a general disclosure requirement and a specific requirement of a reconciliation of the non-GAAP financial measure to the most directly comparable GAAP financial measure.

a. General Disclosure Requirement[22]

Regulation G includes the general disclosure requirement that a registrant, or a person acting on its behalf, shall not make public a non-GAAP financial measure that, taken together with the information accompanying that measure, contains an untrue statement of a material fact or omits to state a material fact necessary in order to make the presentation of the non-GAAP financial measure, in light of the circumstances under which it is presented, not misleading.[23]

[18] See, for example, the comment letters of Deloitte & Touche, LLP and the Association of Private French Enterprises-Association of Large French Enterprises.

[19] FASB Statement No. 131, Disclosures About Segments of an Enterprise and Related Information, requires that companies report a measure of profit or loss and total assets for each reportable segment. This tabular information is presented in a note to the audited financial statements and is required to be reconciled to the GAAP measures, with all significant reconciling items separately identified and described. A registrant is required to provide a Management's Discussion & Analysis of segment information if such a discussion is necessary to an understanding of the business. Such discussion would generally include the measures reported under FASB Statement No. 131.

[20] Rule 5–03(b)(1) through Rule 503(b)(7) of Regulation S–X [17 CFR 210.5–03(b)(1) through 17 CFR 210.5–03(b)(7)] includes guidance on the components of operating income (loss).

[21] See, for example, the comment letters of America's Community Bankers and the American Bankers Association.

[22] 17 CFR 244.100(b).

[23] In its comment letter, the Association for Investment Management and Research expressed concern regarding the presentation of non-GAAP financial measures that appear to have been calculated and presented in a manner consistent with prior presentations of that measure when, in fact, the method of calculating or presenting the measure has changed since prior periods. We agree with this concern. As such, registrants should consider whether a change in the method of calculating or presenting a non-GAAP financial measure from one period to another, without a complete description of the change in that methodology, complies with the requirement of Regulation G that a registrant, or a person acting on its behalf, shall not make public a non-GAAP financial measure that, taken together with the information accompanying that measure, contains an untrue statement of a material fact or omits to state a material fact necessary in order to make the presentation of the non-GAAP financial measure, in light of the circumstances under which it is presented, not misleading.

b. Reconciliation Requirement [24]

Whenever a company that is subject to Regulation G, or a person acting on its behalf, publicly discloses any material information that includes a non-GAAP financial measure, Regulation G requires the registrant to provide the following information as part of the disclosure or release of the non-GAAP financial measure:[25]

- A presentation of the most directly comparable financial measure calculated and presented in accordance with GAAP;[26] and
- A reconciliation (by schedule or other clearly understandable method), which shall be quantitative for historic measures and quantitative, to the extent available without unreasonable efforts, for prospective measures, of the differences between the non-GAAP financial measure presented and the most directly comparable financial measure or measures calculated and presented in accordance with GAAP.[27]

If a non-GAAP financial measure is released orally, telephonically, by webcast, by broadcast, or by similar means, the registrant may provide the accompanying information required by Regulation G by: (1) Posting that information on the registrant's web site; and (2) disclosing the location and availability of the required accompanying information during its presentation.[28]

With regard to the quantitative reconciliation of non-GAAP financial measures that are forward-looking, Regulation G requires a schedule or other presentation detailing the differences between the forward-looking non-GAAP financial measure and the appropriate forward-looking GAAP financial measure. If the GAAP financial measure is not accessible on a forward-looking basis, the registrant must disclose that fact and provide reconciling information that is available without an unreasonable effort. Furthermore, the registrant must identify information that is unavailable and disclose its probable significance.

Some commenters suggested that we define ''public'' disclosure and persons acting ''on behalf of'' a registrant.[29] In both cases, the commenters made reference to Regulation FD [30] as a precedent. We believe that the precedent of Regulation FD is largely inapposite in this regard and, therefore, have not added these definitions. Under Regulation FD, broad ''public'' disclosure is the requirement, not the triggering event. The perceived need for exclusions from the triggering disclosures and the specified list of company officials that are acting for the company under Regulation FD was the concern that any disclosure—private or otherwise—would trigger a public disclosure requirement. There should be no such concerns with Regulation G. Only ''public'' disclosure triggers Regulation G, and an issuer is properly responsible for any person making ''public'' disclosures on its behalf.[31]

We understand, and indeed intend, that Regulation FD and Regulation G will operate in tandem. A ''private'' communication of material, non-public information to, for example, an analyst or a shareholder triggers a requirement for broad public disclosure under Regulation FD. If that public disclosure is of material information containing a non-GAAP financial measure, Regulation G will apply to that disclosure.

4. Liability Matters

Rule 102 of Regulation G [32] expressly provides that neither the requirements of Regulation G nor a person's compliance or non-compliance with the requirements of Regulation G shall in itself affect any person's liability under Exchange Act Section 10(b) [33] or Rule 10b–5 thereunder.[34] Disclosure pursuant to Regulation G that is materially deficient may, in addition to violating Regulation G, give rise to a violation of Section 10(b) or Rule 10b–5 thereunder if all the elements for such a violation are present. In this regard, we reminded companies in December 2001 that, under certain circumstances, non-GAAP financial measures could mislead investors if they obscure the company's GAAP results.[35] We continue to be of the view that some disclosures of non-GAAP financial measures could give rise to actions under Rule 10b–5.[36]

Section 3(b) of the Sarbanes-Oxley Act provides that a violation of that Act or the Commission's rules thereunder shall be treated for all purposes as a violation of the Exchange Act. Therefore, if an issuer, or any person acting on its behalf, fails to comply with Regulation G, the issuer and/or the person acting on its behalf could be subject to a Commission enforcement action alleging violations of Regulation G. Additionally, if the facts and circumstances warrant, we could bring an action under both Regulation G and Rule 10b–5.

B. Non-GAAP Financial Measures in Filings With the Commission—Amendments to Item 10 of Regulation S–K, Item 10 of Regulation S–B and Form 20–F

1. Application

a. General Standard

We are amending Item 10 of Regulation S–K and Item 10 of Regulation S–B to include a statement concerning the use of non-GAAP financial measures in filings with the Commission. The amendments do not apply to registered investment

[24] 17 CFR 244.100(a).

[25] A registrant's failure to include all of the information required to be included in a public disclosure or release by Regulation G would not affect that registrant's form eligibility under the Securities Act or whether there is adequate current public information regarding the registrant for purposes of Securities Act Rule 144(c) (17 CFR 230.144(c)).

[26] Examples of financial measures calculated and presented in accordance with GAAP would include, but not be limited to, earnings or cash flows as reported in the GAAP financial statements. We believe that it is most appropriate to provide registrants with the flexibility to best make the determination as to which is the ''most directly comparable financial measure calculated and presented in accordance with GAAP.'' We, therefore, do not believe that it is appropriate to provide a specific definition of that term. As general guidance, however, we note that our staff has been, and continues to be, of the view that (1) non-GAAP financial measures that measure cash or ''funds'' generated from operations (liquidity) should be balanced with disclosure of amounts from the statement of cash flows (cash flows from operating, investing and financing activities); and (2) non-GAAP financial measures that depict performance should be balanced with net income, or income from continuing operations, taken from the statement of operations.

[27] In the case of ratios or measures where a non-GAAP financial measure is the numerator and/or the denominator in the calculation of that ratio or measure, the registrant must provide a reconciliation with regard to each non-GAAP financial measure used in the calculation. The registrant must also show the ratio or measure as calculated using the most directly comparable GAAP financial measure(s).

[28] Note 1 to Rule 100 of Regulation G [17 CFR 244.100]. While Note 1 to Regulation G does not state how long a company must keep this information available on its web site, we encourage companies to provide ongoing web site access to this information. At a minimum, we suggest that companies provide web site access to this information for at least a 12-month period.

[29] See, for example, the comment letter of the American Bar Association Committee on Federal Regulation of Securities and the American Bar Association Committee on Law and Accounting.

[30] 17 CFR 243.100–243.103.

[31] Whether disclosure is ''public'' will, of course, depend on all of the facts and circumstances surrounding that disclosure. Whether disclosure is ''on behalf of'' the registrant also will depend on all of the facts surrounding that disclosure. However, consistent with Regulation FD, we intend that a person who discloses material non-public information in breach of a duty of trust or confidence to the registrant should not be considered to be acting ''on behalf of'' the registrant.

[32] 17 CFR 244.102

[33] 15 U.S.C. § 78j.

[34] 17 CFR 240.10b–5.

[35] See Release No. 33–8039 (Dec. 4, 2001) [59 FR 63731].

[36] See Release No. 33–8039 (Dec. 4, 2001) [59 FR 63731] and *In the Matter of Trump Hotels & Casino, Inc.,* Release No. 34–45287 (Jan. 16, 2002).

companies.[37] The non-GAAP financial measures provisions in amended Item 10 of Regulation S–K and Item 10 of Regulation S–B apply to the same categories of non-GAAP financial measures as are covered by Regulation G.[38]

b. Foreign Private Issuers

We are amending Exchange Act Form 20–F to incorporate Item 10 of Regulation S–K. Accordingly, foreign private issuers will be subject to the same requirements as domestic issuers with respect to the use of non-GAAP financial measures in filings with the Commission on Form 20–F.[39] Consistent with the proposal, filers on Form 40–F under the Multi-Jurisdictional Disclosure System are not subject to those requirements.[40]

As noted above, the definition of ''non-GAAP financial measure'' is the same for purposes of these amendments as for Regulation G. However, a non-GAAP financial measure that would otherwise be prohibited will be permitted in a Form 20–F filing of a foreign private issuer if the measure is (1) required or expressly permitted by the standard-setter that establishes the generally accepted accounting principles used in the foreign private issuer's primary financial statements and (2) included in the foreign private issuer's annual report or financial statements used in its home country jurisdiction or market.[41] We have modified the language of this provision to clarify its application. We intended, however, that this exception cover only situations where the foreign organization affirmatively acts to require or permit the measure, and not situations where the measure was merely not prohibited. We have, therefore, maintained the requirement of ''express'' permission, notwithstanding certain comments we received.[42]

2. Requirements of Amended Item 10 of Regulation S–K and Item 10 of Regulation S–B

The amendments to Item 10 of Regulation S–K and Item 10 of Regulation S–B require registrants using non-GAAP financial measures in filings with the Commission to provide:[43]

- A presentation, with equal or greater prominence, of the most directly comparable financial measure calculated and presented in accordance with GAAP;
- A reconciliation (by schedule or other clearly understandable method), which shall be quantitative for historical non-GAAP measures presented, and quantitative, to the extent available without unreasonable efforts, for forward-looking information, of the differences between the non-GAAP financial measure disclosed or released with the most directly comparable financial measure or measures calculated and presented in accordance with GAAP;
- A statement disclosing the reasons why the registrant's management believes that presentation of the non-GAAP financial measure provides useful information to investors regarding the registrant's financial condition and results of operations;[44] and
- To the extent material, a statement disclosing the additional purposes, if any, for which the registrant's management uses the non-GAAP financial measure that are not otherwise disclosed.

In addition to these mandated disclosure requirements, amended Item 10 of Regulation S–K and Item 10 of Regulation S–B prohibit the following:

- Excluding charges or liabilities that required, or will require, cash settlement, or would have required cash settlement absent an ability to settle in another manner, from non-GAAP liquidity measures, other than the measures EBIT and EBITDA;
- Adjusting a non-GAAP performance measure to eliminate or smooth items identified as non-recurring, infrequent or unusual, when (1) the nature of the charge or gain is such that it is reasonably likely to recur within two years, or (2) there was a similar charge or gain within the prior two years;[45]
- Presenting non-GAAP financial measures on the face of the registrant's financial statements prepared in accordance with GAAP or in the accompanying notes;
- Presenting non-GAAP financial measures on the face of any pro forma financial information required to be disclosed by Article 11 of Regulation S–X; and
- Using titles or descriptions of non-GAAP financial measures that are the same as, or confusingly similar to, titles or descriptions used for GAAP financial measures.

The requirements and prohibitions for filed information are more extensive and detailed than those of Regulation G. The additional requirements and prohibitions are generally consistent with the staff's historical practice in situations where it has reviewed filings containing non-GAAP financial measures.

Commenters expressed the concern that the prohibition on excluding from non-GAAP liquidity measures charges or liabilities that required, or will require, cash settlement, or would have required cash settlement absent an ability to settle in another manner, would prohibit the use of the non-GAAP financial measure EBITDA.[46] We are exempting EBIT and EBITDA from this provision because of their wide and recognized existing use. However, registrants must reconcile these measures to their most directly comparable GAAP financial measure. Also, in the discussion of why the measure is useful to investors, registrants must discuss why investors would find it valuable in the context in which it is presented, given the excluded items.

We had proposed that the requirements for a reconciliation to the most directly comparable GAAP financial measure be slightly more stringent than those set forth under Regulation G. In particular, in filings

[37] Regulation S–B does not apply to registered investment companies, as they are excluded from the definition of ''small business issuer'' [17 CFR 228.10(a)(1)(iii)]. The amendments to Regulation S–K include a specific exemption for registered investment companies [17 CFR 229.10(e)(7)].

[38] These amendments apply only to non-GAAP financial measures in filings with the Commission. Regulation G applies to any public disclosure of material information that includes a non-GAAP financial measure, regardless of whether it is in a filing with the Commission. Accordingly, the requirement of Regulation G that the presentation of a non-GAAP financial measure, taken together with the information accompanying the measure and any other accompanying discussion, not contain a material misstatement or material omission necessary in order to make the presentation not misleading, in light of the circumstances in which the presentation is made, also applies to disclosures in documents filed with the Commission.

[39] Item 10 of Regulation S–K will not apply to materials submitted to the Commission on Form 6–K. However, if the information in the Form 6–K is incorporated by reference into a registration statement, prospectus or annual report, Item 10 of Regulation S–K would then apply to that information.

[40] Any public disclosure by these issuers that is not covered by the exclusion for foreign private issuers would, however, be subject to Regulation G.

[41] While such a non-GAAP financial measure would not be prohibited in a Form 20–F, the remaining requirements of Item 10 of Regulation S–K would, of course, continue to apply.

[42] See, for example, the comment letters of the American Institute of Certified Public Accountants; Deloitte & Touche, LLP; and Cleary, Gottlieb, Steen & Hamilton.

[43] As with Regulation G, the requirements of Item 10 of Regulation S–K and Item 10 of Regulation S–B will not apply to non-GAAP financial measures included in disclosure relating to a proposed business combination transaction, the entity resulting from the business combination transaction, or an entity that is a party to the business combination transaction if the disclosure is contained in a communication that is subject to the Commission's communications rules applicable to business combination transactions.

[44] With regard to the issuer's statement as to why management believes the non-GAAP financial measure provides useful information to investors, the fact that the non-GAAP financial measure is used by or useful to analysts cannot be the sole support for presenting the non-GAAP financial measure. Rather, the justification for the use of the measure must be substantive; it can, of course, be a substantive justification that causes a measure to be used by or useful to analysts.

[45] Permitted adjustments (including those permitted because they satisfy the two-year condition) would, of course, be subject to the reconciliation requirement.

[46] See, for example, the comment letters of Latham & Watkins; Intel Corporation; the Association of the Bar of the City of New York, Committee on Securities Regulation; BDO Seidman, LLP; and Ernst & Young LLP.

with the Commission, it was proposed that there not be an ''unreasonable effort'' exception for forward-looking information to the requirement for a quantitative reconciliation between the non-GAAP financial measure and the comparable GAAP financial measure. Commenters expressed the view that the need for such an exception was present equally in disclosure that was filed with the Commission and disclosure that was not filed.[47] In response to these comments, we have revised the requirement for filed documents to include the same exception as in Regulation G. Accordingly, with regard to the quantitative reconciliation of non-GAAP financial measures that are forward-looking, Item 10 of Regulation S–K and Item 10 of Regulation S–B require a schedule or other presentation detailing the differences between the forward-looking non-GAAP financial measure and the appropriate forward-looking GAAP financial measure. If the GAAP financial measure is not accessible on a forward-looking basis, the registrant must disclose that fact and provide reconciling information that is available without an unreasonable effort. Furthermore, the registrant must identify information that is unavailable and disclose its probable significance.

As proposed, Item 10 of Regulation S–K and Item 10 of Regulation S–B would have included a prohibition on the use of ''non-GAAP per share financial measures.'' We received significant comment expressing concern with this part of the proposal.[48] The commenters were of the view that the proposed prohibition would deprive investors of useful information and that the other requirements of Regulation G and Item 10 would provide adequate protections with regard to the use of such financial measures.[49] In response to those comments, we have not included a prohibition on ''non-GAAP per share financial measures'' in the amendments to Item 10 of Regulation S–K or Item 10 of Regulation S–B.[50]

Some commenters were of the view that the proposed requirements of (1) a statement regarding the purposes for which management uses the non-GAAP financial measure and (2) a statement of the utility of the non-GAAP financial measure to investors would likely result in duplicative disclosure.[51] In response to these comments, we have revised the requirement of a statement of the purposes for which management uses the non-GAAP financial measure to apply only to the extent that the information is material and is not presented in the statement of the utility of the non-GAAP financial measure to investors. Consistent with the proposal, the requirement for these statements may be satisfied by including the statements in the most recent annual report filed with the Commission (or a more recent filing) and by updating those statements, as necessary, no later than the time of the filing containing the non-GAAP financial measure.

The required statements of the purposes for which management uses the non-GAAP financial measure and the utility of the information to investors should not be boilerplate. We intend these statements to be clear and understandable. We also intend these statements to be specific to the non-GAAP financial measure used, the registrant, the nature of the registrant's business and industry, and the manner in which management assesses the non-GAAP financial measure and applies it to management decisions.

C. New Item 12 of Form 8–K

We are amending Form 8–K to add new Item 12, ''Disclosure of Results of Operations and Financial Condition.''[52] The addition of Item 12 to Form 8–K will bring earnings information within our current reporting system by requiring registrants to furnish to the Commission all releases or announcements disclosing material non-public financial information about completed annual or quarterly fiscal periods. New Item 12 does not require that companies issue earnings releases or similar announcements. However, such releases and announcements will trigger the requirements of Item 12.

1. General Requirement

Item 12 requires registrants to furnish to the Commission a Form 8–K within five business days of any public announcement or release disclosing material non-public information regarding a registrant's results of operations or financial condition for an annual or quarterly fiscal period that has ended.[53] The requirements of Item 12 will apply regardless of whether the release or announcement includes disclosure of a non-GAAP financial measure. Item 12 requires the registrant to identify briefly the announcement or release and include the announcement or release as an exhibit to the Form 8–K.

Repetition of information that was publicly disclosed previously or the release of the same information in a different form (for example in an interim or annual report to shareholders) would not trigger the Item 12 requirement. This result would not

[47] See, for example, the comment letters of the Securities Law Committee of the American Society of Corporation Secretaries and Deloitte & Touche, LLP.

[48] See, for example, the comment letters of Fannie Mae; the Securities Law Committee of the American Society of Corporate Secretaries; the American Council of Life Insurers; the American Institute of Certified Public Accountants; the National Association of Real Estate Investment Trusts; the Real Estate Roundtable; the New York Clearing House Association; and the Committee on Corporate Reporting of Financial Executives International.

[49] See footnote 11 for additional information regarding the use of ''non-GAAP per share financial measures.'' Further, despite the absence of a prohibition against the use of ''non-GAAP per share financial measures'' in Item 10 of Regulation S–K and Item 10 of Regulation S–B, registrants should consider whether the use of any per share measure that is not calculated using a share figure that is presented on a diluted basis complies with (1) the requirement of Regulation G that a registrant, or a person acting on its behalf, shall not make public a non-GAAP financial measure that, taken together with the information accompanying that measure, contains an untrue statement of a material fact or omits to state a material fact necessary in order to make the presentation of the non-GAAP financial measure, in light of the circumstances under which it is presented, not misleading; and (2) generally accepted accounting principles (see, for example, FASB Statement No. 128, Earnings Per Share).

[50] A number of commenters in the real estate industry expressed concern regarding the use of the non-GAAP financial measure ''funds from operations per share'' in earnings releases and materials that are filed with or furnished to the Commission. Because amended Item 10 of Regulation S–K and amended Item 10 of Regulation S–B do not include a prohibition on ''non-GAAP per share financial measures,'' registrants may use the ''funds from operations per share'' measure, subject to the requirements of Regulation G, amended Item 10 of Regulation S–K and amended Item 10 of Regulation S–B.

[51] See, for example, the comment letter of the American Bar Association Committee on Federal Regulation of Securities and the American Bar Association Committee on Law and Accounting.

[52] In Release No. 33–8106 (June 17, 2002) [67 FR 42913], we proposed significant amendments to Form 8–K. We intend to address those proposals in the near future. As we have not yet revised Form 8–K as proposed in Release No. 33–8106, we have adopted the proposed requirement regarding earnings releases and similar disclosures without using the new numbering system proposed for Form 8–K. At the time we address the proposals in Release No. 33–8106, we will consider the need to renumber all of the items in Form 8–K, including new Item 12.

[53] The proposing release would have required a registrant to file the Form 8–K under Item 12 within two business days after the earnings release or similar disclosure. We had proposed this deadline in anticipation of the adoption of our proposal, in Release No. 33–8106, to shorten the filing deadline for all reports on Form 8–K. As we have not yet addressed those proposals, we believe it is appropriate to adopt a temporary deadline for furnishing a report on Form 8–K under Item 12 of five business days, the shorter of the two existing Form 8–K deadlines. When we address the Form 8–K proposals, we may then shorten the Item 12 deadline. At that time, we will consider the comments received in response to the proposing release and our proposal therein to set a two-business day deadline for earnings releases or similar disclosures on Form 8–K.

change if the repeated information were accompanied by information that was not material, whether or not already public. However, release of additional or updated material non-public information regarding the registrant's results of operations or financial condition for a completed fiscal year or quarter would trigger an additional Item 12 obligation. Issuers that make earnings announcements or other disclosures of material non-public information regarding a completed fiscal quarter or year in an interim or annual report to shareholders would be permitted to specify in the Form 8–K which portion of that report contains the information required to be furnished under Item 12. In addition, the requirement to furnish a Form 8–K under Item 12 would not apply to issuers that make these announcements and disclosures only in their quarterly reports filed with the Commission on Form 10–Q [54] (or 10–QSB [55]) or their annual reports filed with the Commission on Form 10–K [56] (or 10–KSB[57]).

Item 12 includes an exception from its requirements where non-public information is disclosed orally, telephonically, by webcast, by broadcast, or by similar means in a presentation that is complementary to, and occurs within 48 hours after, a related, written release or announcement that triggers the requirements of Item 12.[58] In this situation, Item 12 would not require the registrant to furnish an additional Form 8–K with regard to the information that is disclosed orally, telephonically, by webcast, by broadcast, or by similar means if: [59]

- The related, written release or announcement has been furnished to the Commission on Form 8–K pursuant to Item 12 prior to the presentation; [60]
- The presentation is broadly accessible to the public by dial-in conference call, webcast or similar technology;
- The financial and statistical information contained in the presentation is provided on the registrant's web site, together with any information that would be required under Regulation G; [61] and
- The presentation was announced by a widely disseminated press release that included instructions as to when and how to access the presentation and the location on the registrant's web site where the information would be available.

Item 12 of Form 8–K will apply only to publicly disclosed or released material non-public information concerning an annual or quarterly fiscal period that has ended. While such disclosure may also include forward-looking information, it is the material information about the completed fiscal period that triggers Item 12. Accordingly, Item 12 will not apply to public disclosure of earnings estimates for future or ongoing fiscal periods, unless those estimates are included in the public announcement or release of material non-public information regarding an annual or quarterly fiscal period that has ended.[62]

2. Filing Versus Furnishing—Liability and Incorporation by Reference

As proposed, Item 12 would have required registrants to ''file'' a Form 8–K meeting the requirements of Item 12. This proposal was in contrast to Item 9 of Form 8–K, which permits registrants to ''furnish'' a Form 8–K to the Commission. The most significant implications of ''furnishing'' a Form 8–K to the Commission, rather than ''filing'' a Form 8–K with the Commission are clear:

- Information that is ''furnished to the Commission'' in such a Form 8–K is not subject to Section 18 [63] of the Exchange Act unless the registrant specifically states that the information is to be considered ''filed'';
- Information that is ''furnished to the Commission'' in such a Form 8–K is not incorporated by reference into a registration statement, proxy statement or other report unless the registrant specifically incorporates that information into those documents by reference; and
- Information that is ''furnished to the Commission'' in such a Form 8–K is not subject to the requirements of amended Item 10 of Regulation S–K or Item 10 of Regulation S–B, while ''filed'' information would be subject to those requirements.

We have considered the views of commenters that requiring earnings releases to be filed would have a detrimental effect on the level and quality of information that is provided to investors.[64] These commenters expressed the concern that the enhanced liability may preclude registrants from making earnings releases or similar disclosures. Further, the commenters were concerned that the need to satisfy the more stringent requirements in amended Item 10 of Regulation S–K and Item 10 of Regulation S–B within the required timeframe of Form 8–K would cause registrants to limit their publication of earnings releases or similar disclosures.

After consideration of these comments, Item 12 of Form 8–K, as adopted, requires that earnings releases or similar disclosures be furnished to the Commission rather than filed. Regulation G would, of course, apply to these releases and disclosures. In addition, to provide certain of the protections provided by the amendments to Item 10 of Regulation S–K and Item 10 of Regulation S–B to earnings releases, even if they are not filed, we have included in Item 12 of Form 8–K the requirements of paragraph (e)(1)(i) of Item 10 of Regulation S–K and paragraph (h)(1)(i) of Item 10 of Regulation S–B. As a result, in addition to the requirements already imposed by Regulation G, registrants would be required to disclose:

- The reasons why the registrant's management believes that presentation of the non-GAAP financial measure provides useful information to investors regarding the registrant's financial condition and results of operations; [65] and
- to the extent material, the additional purposes, if any, for which the registrant's management uses the non-GAAP financial measure that are not otherwise disclosed.

Registrants may satisfy this requirement by including the disclosure

[54] 17 CFR 249.308a.

[55] 17 CFR 249.308b.

[56] 17 CFR 249.310.

[57] 17 CFR 249.310b.

[58] We intend this exception to permit current practices where these presentations include information that, although not already included in the related, written release or announcement, is complementary thereto. We do not intend this exception to foster changes in practice whereby disclosure is shifted from the written release or announcement to the complementary presentation.

[59] In its comment letter, the American Bar Association Committee on Federal Regulation of Securities asked whether the phrase ''similar means'' in proposed Item 1.04(b) related to the entire preceding list (as proposed, this list read ''orally, telephonically, webcast, or by similar means'') or whether it merely related to ''webcast.'' We intend the phrase ''similar means'' to relate to the entire preceding list. We have revised Item 12 to be clearer in this regard.

[60] As the deadline for furnishing the Form 8–K to the Commission is five business days, this exception would be available only to registrants that furnish that Form 8–K to the Commission in advance of the deadline specified in Item 12.

[61] While Item 12 does not state how long a company must keep this information available on its web site, we encourage companies to provide ongoing web site access to this information. At a minimum, we suggest that companies provide web site access to this information for at least a 12-month period. Further, we understand that a company may have multiple web sites that it uses for various purposes, such as investor relations, product information and business-to-business activities. We interpret this requirement to mean that the information is provided on the web site or page that the company normally uses for its investor relations functions.

[62] Of course, Regulation FD would continue to apply to disclosure of such forward-looking information if it were material.

[63] 15 U.S.C. § 78r.

[64] *See,* for example, the comment letters of the American Bar Association Committee on Federal Regulation of Securities; the American Bar Association Committee on Law and Accounting; the American Council of Life Insurers; and the Association of the Bar of the City of New York, Committee on Securities Regulation.

[65] *See* footnote 44 and the related discussion of the amendments to Item 10 of Regulation S–K and Item 10 of Regulation S–B for additional information with regard to this requirement.

in the Form 8–K or in the release or announcement that is included as an exhibit to the Form 8–K. As indicated above, registrants also may satisfy the requirement to provide these additional two statements by including the disclosure in their most recent annual report filed with the Commission (or a more recent filing) and by updating those statements, as necessary, no later than the time the Form 8–K is furnished to the Commission. The other amendments to Item 10 of Regulation S–K and Item 10 of Regulation S–B would not apply.

3. Relationship of Item 12 to Regulation FD

Earnings releases and similar disclosures that trigger the requirements of Item 12 are also subject to Regulation FD. The application of Item 12 would differ from Regulation FD, however, in that the requirements of Item 12 would always implicate Form 8–K for those disclosures, while Regulation FD provides that Form 8–K is an alternative means of satisfying its requirements. Further, a Form 8–K furnished to the Commission pursuant to Item 9 would satisfy an issuer's obligation under Regulation FD only if the Form 8–K were furnished to the Commission within the time frame required by Regulation FD. Regulation FD could, of course, be satisfied by public disclosure other than through the filing of a Form 8–K meeting Regulation FD's requirements; in that case, Item 12 would require that a Form 8–K be furnished to the Commission within the five business day timeframe of Item 12. A Form 8–K furnished within the timeframe required by Regulation FD and otherwise satisfying the requirements of both Item 9 and Item 12 could be furnished to the Commission once, indicating that it is being furnished under both Item 9 and Item 12, and satisfy both requirements.

III. Paperwork Reduction Act

Regulation G and related amendments to Regulation S–K, Regulation S–B, Form 8–K and Form 20–F contain ''collections of information'' requirements within the meaning of the Paperwork Reduction Act of 1995 (''PRA''),[66] and the Commission has submitted the proposals to the Office of Management and Budget (''OMB'') for review in accordance with 44 U.S.C. 3507(d) and 5 CFR 1320.11. The titles for the information collections are: Regulation G, Regulation S–K, Regulation S–B, Form 8–K and Form 20–F. The Commission did not receive any comments on the paperwork burden. OMB has approved all but one of the collections of information. OMB has not yet approved the changes to Form 8–K. We will announce the approval by separate release.

The Commission is adopting Regulation G pursuant to Section 401 of the Sarbanes-Oxley Act. Regulation G will require registrants that publicly disclose material information that includes non-GAAP financial measures to provide a reconciliation to the most directly comparable GAAP financial measures. Regulation G is intended to implement the requirements of the Sarbanes-Oxley Act. Specifically, Regulation G is intended to provide investors with balanced financial disclosure when non-GAAP financial measures are presented. Regulation G defines a non-GAAP financial measure as a numerical measure of an issuer's historical or future financial performance, financial position or cash flow that:

- Excludes amounts, or is subject to adjustments that have the effect of excluding amounts, that are included in the most directly comparable measure calculated and presented in accordance with GAAP in the statement of income, balance sheet or statement of cash flows (or equivalent statements) of the issuer; or
- Includes amounts, or is subject to adjustments that have the effect of including amounts, that are excluded from the most directly comparable measure calculated and presented in accordance with GAAP.

Accordingly, by definition, a non-GAAP financial measure that triggers the application of Regulation G would have been derived from a GAAP measure. We continue to expect the cost of obtaining the additional disclosure required by Regulation G to be minimal. Accordingly, we have estimated for purposes of the PRA that it will take .5 burden hour for each time a respondent complies with Regulation G. We anticipate that on average a company will have to comply with Regulation G roughly six times a year. Since there are approximately 14,000 public companies that would be subject to Regulation G we have estimated that there will be 84,000 disclosures made in accordance with Regulation G for a total of 42,000 burden hours. We would expect that an in-house junior accountant would prepare the actual reconciliation.

Regulation S–K (OMB Control No. 3235–0071) and Regulation S–B (OMB Control No. 3235–0417) prescribe disclosure requirements that registrants must follow when filing registration statements, reports and schedules with the Commission. Our amendments to Item 10 of Regulation S–K and Item 10 of Regulation S–B incorporate the requirements of Regulation G and codify existing staff interpretations. Because the collection of information regarding the reconciliation is already being accounted for in Regulation G, we do not believe that adding the same requirement to Item 10 of Regulation S–K and Item 10 of Regulation S–B creates an additional collection of information within the meaning of the PRA. To account for the reconciliation in both Regulation G and Item 10 or Regulation S–K and Item 10 of Regulation S–B would result in double counting. Additionally, companies already, usually and customarily, disclose the purposes for which the registrant's management uses the non-GAAP financial measure and why it believes that its presentation of the non-GAAP financial measure provides useful information to investors. Accordingly, we continue to believe that our amendments to Item 10 of Regulation S–K and Item 10 of Regulation S–B do not contain a new ''collection of information'' or alter the existing burden of these collections of information within the meaning of the PRA.

Form 8–K (OMB Control No. 3235–0060) prescribes information, such as material events or corporate changes that a registrant must disclose. Item 12 of Form 8–K requires a company that publicly discloses material information regarding its actual or expected quarterly or annual results of operations or financial condition for a completed fiscal period to furnish the text of the public disclosure and any accompanying analysis. Item 12 of Form 8–K does not require companies to actually issue an earnings announcement or release but only requires that it be furnished if they choose to issue an earnings announcement or release. Item 12 will bring earnings announcements and releases into the formal disclosure system although they would not be deemed filed or, absent additional action by the registrant, incorporated into registration statements or proxy statements filed with the Commission. The Forms 8–K would be available to investors on a widespread basis on our Internet Web site.

Item 12 of Form 8–K was modified from our proposing release in that the Form 8–K is no longer considered to be filed with the Commission but, rather, it would be considered furnished to the Commission. This change does not, however, alter the paperwork burden. We estimate, for purposes of the PRA, the burden associated with actually furnishing the Form 8–K to be minimal.

[66] 44 U.S.C. § 3501 *et seq.*

We believe that complying with Item 12 of Form 8–K would require approximately .5 of a burden hour. We estimate that approximately 14,000 public companies would make an average of four filings per year. We believe the total burden hours associated with Item 12 would be 28,000 hours. We would expect that companies would use in-house personnel to file the Form 8–K.

We have amended Form 20–F (OMB Control Number 3235–0288) to incorporate our amendments to Item 10 of Regulation S–K. While Regulation G provides a limited exception for foreign private issuers, this exception would not apply to their Form 20–F filings or any disclosure of non-GAAP financial measures made in the United States. Accordingly, we do not believe our amendment to Form 20–F would result in an additional collection of information as any burden is already accounted for in Regulation G.

An agency may not conduct or sponsor, and a person is not required to respond to, a collection of information unless it displays a currently valid OMB control number. Compliance with the disclosure requirements is mandatory. There is no mandatory retention period for the information disclosed, and responses to the disclosure requirements will not be kept confidential.

IV. Cost-Benefit Analysis

The Sarbanes-Oxley Act seeks to enhance the financial disclosure of public companies. In furtherance of this goal, the Sarbanes-Oxley Act has required the Commission, among other things, to adopt rules requiring that if a company publicly discloses non-GAAP financial measures or includes them in a Commission filing, the company must reconcile those non-GAAP financial measures to a company's financial condition and results of operations under GAAP. Moreover, the Sarbanes-Oxley Act requires that any public disclosure of a non-GAAP financial measure not contain an untrue statement of a material fact or omit to state a material fact necessary in order to make the non-GAAP financial measure, in light of circumstances under which it is presented, not misleading. Additionally, the Sarbanes-Oxley Act seeks to have companies that report under Sections 13(a) and 15(d) of the Exchange Act disclose to the public on a rapid and current basis information concerning material changes in their financial condition or operations.

New Regulation G and the amendments to Item 10 of Regulation S–K, Item 10 of Regulation S–B and Form 20–F will fulfill the statutory directive under Section 401(b) of the Sarbanes-Oxley Act. We recognize that any implementation of the Sarbanes-Oxley Act would likely result in costs as well as benefits and have an effect on the economy. We are sensitive to the costs and benefits. While our proposals received significant public comment, no commenter provided any quantitative data on costs or benefits.

A. Benefits

Regulation G and the amendments to our rules are intended to ensure that investors and others are not misled by the use of non-GAAP financial measures. Additionally, the amendments to Form 8–K are intended to create a central depository where investors and other market participants can look to find the latest earnings announcements and releases by public companies and provide enhanced attention to those announcements and releases.

Regulation G and amendments to Item 10 of Regulations S–K and S–B require that any non-GAAP financial measure presented be reconciled with its most directly comparable financial measure prepared in accordance with GAAP. We anticipate that this reconciliation will help investors and market professionals to better evaluate the non-GAAP financial measures presented. We continue to believe that the reconciliation will provide the securities markets with additional information to more accurately evaluate companies' securities and, in turn, result in a more accurate pricing of securities.

B. Costs

We believe that the costs associated with the Regulation G and amendments will be minimal. As noted earlier, no commenter provided any quantitative data in their comment letters to the Commission. We contacted a sample of commenters to gather additional data about the costs associated with reconciling a non-GAAP financial measure with the most directly comparable GAAP financial measure. The commenters stated that, in most cases, for historical measures, registrants have the most directly comparable GAAP financial measure available at the time they prepare or release a non-GAAP financial measure.[67] In addition, the commenters stated that the cost of reconciling a non-GAAP financial measure with the most directly comparable GAAP financial measure is not significant for historical measures. Most of the commenters that responded to our inquiries already prepare a reconciliation (either for internal use, external release, or both) between a non-GAAP financial measure and the most directly comparable GAAP financial measure when a non-GAAP financial measure, on an historical basis, is presented. Accordingly, those companies do not expect to incur any significant incremental costs in complying with the proposal in this particular area.[68]

Three commenters in the group that we contacted indicated that they present forward-looking non-GAAP financial measures in earnings releases. Those companies indicated that they do not have the most directly comparable GAAP financial measure available at the time they prepare their non-GAAP measure because they are unable to quantify certain amounts that would be required to be included in the GAAP measure.[69] However, those companies would be able to explain, at the date the forward-looking non-GAAP financial measure is released, the types of gains, losses, revenues or expenses that would need to be added to or subtracted from the non-GAAP financial measure to arrive at the most directly comparable GAAP measure, even though they cannot quantify all of those items. The companies indicated that if they were to be required to quantify the reconciling items between the non-GAAP forward-looking financial measure and the most directly comparable GAAP financial

[67] We continue to believe that, in cases where the GAAP financial measure is not available for historical measures, any costs associated with obtaining the GAAP financial measure would reduce future costs associated with filing other forms, such as the Form 10–Q and Form 10–K where the GAAP measure must be presented. See also footnote 68.

[68] One company indicated that, for a performance-based non-GAAP financial measure, the company already prepares a reconciliation to net income determined in accordance with GAAP by the date of the earnings release. However, for non-GAAP measures that are liquidity measures, the company does not currently prepare a reconciliation to the most comparable GAAP measure by the date of the company's earnings release because the statement of cash flows is not prepared until later in the financial reporting process. This company estimated that, under the proposal, the company would not necessarily incur significant additional costs to reconcile its non-GAAP liquidity financial measures to GAAP-based cash flow measures, but some salaried employees would be required to work additional hours earlier in the financial reporting process to complete the preparation of the statement of cash flows by the date of the earnings release.

[69] For example, one company that uses a non-GAAP financial measure derived from net income told us that it excludes realized capital gains and losses, gains and/or losses on dispositions of operations, and accounting changes in preparing its non-GAAP financial measure, because it is unable to forecast with any degree of comfort the amounts that would be recorded under GAAP for these items.

measure, it would be very difficult and may result in the company deciding not to provide the non-GAAP financial measure to the public. Regulation G requires that, for forward-looking measures, the reconciliation between non-GAAP and GAAP financial measures must be quantitative ''to the extent available and without unreasonable efforts.'' Accordingly, we do not believe Regulation G will impose significant additional costs on registrants with respect to reconciling forward-looking non-GAAP and GAAP financial measures.

We continue to estimate that public companies would have to comply with Regulation G six times a year. There are roughly 14,000 public companies. Using our estimates from the Paperwork Reduction Act section, we would expect that it would take a junior accountant roughly .5 hours to complete the required reconciliation and ensure there are no material misstatements. Accordingly, we have estimated that the total burden hours needed to comply with Regulation G would be 42,000 hours. Using cost data from the Securities Industry Association's Report on Management & Professional Earnings in the Securities Industry 2001 (SIA Report)[70] and adding an additional 35% for costs associated with overhead, we find that, on average, a junior accountant would earn $26 an hour. We believe the salary of a junior accountant is appropriate for our estimates because, in most cases, we would expect the most directly comparable GAAP measure to be available. Therefore, we have estimated the total costs associated with complying with Regulation G to be $1,092,000.

Most commenters had concerns with our amendments to Item 10 of Regulation S–K and Item 10 of Regulation S–B and our requirement to file their earnings release, if any, on Form 8–K. Commenters generally opposed the prohibitions of Item 10 as they would apply to their earnings release. Commenters particularly opposed the prohibition against presenting a non-GAAP per share measure. Accordingly, we have made two modifications to our proposals. First, Item 10 would no longer prohibit the presentation of a non-GAAP per share measure.[71] Second, the earnings release would no longer be required to be filed on Form 8–K but, rather, it would be required to be furnished to the Commission under Form 8–K. The change from filing to furnishing has two consequences. First, a company's earnings releases would no longer be subject to Item 10 prohibitions. Second, the earnings release would no longer be subject to Section 18 of the Exchange Act.

With regard to other filings with the Commission, Item 10 would continue to apply. Because the costs associated with providing a reconciliation are already being accounted for in Regulation G, we do not believe adding the same requirement to Item 10 of Regulation S–K and Item 10 of Regulation S–B incurs any incremental cost to the registrant. To account for the required reconciliation in both Regulation G and Item 10 of Regulation S–K and Item 10 of Regulation S–B would result in double counting. Additionally, because companies currently are expected to disclose the purposes for which the registrant's management uses the non-GAAP financial measure and why it believes that presentation of the non-GAAP financial measure provides useful information to investors, this aspect of the rule would not increase costs already properly being borne by registrants. Accordingly, we do not believe our amendments to Item 10 of Regulation S–K and Item 10 of Regulation S–B would result in any additional costs not already included in Regulation G or current filing requirements.

With regard to the required submission on Form 8–K, we continue to believe that personnel in finance, investor relations or corporate communications departments would most likely submit the earnings announcements or releases, as most earnings announcements are disseminated via press release. We have estimated that the actual time required to submit an earnings announcement or release on Form 8–K to be .5 hour. In estimating this time burden we note that most press releases are fairly short in length, making the actual process of filing easier. We also note that the software necessary to file a Form 8–K is available free of charge from the Commission. We have estimated that public companies would be required to comply with the required submission on Form 8–K roughly four times a year. Assuming 14,000 public companies and a total burden of .5 hour for the filing, we estimate that companies will spend 28,000 hours complying with our Form 8–K amendment. Again using the SIA Report, and adding an additional 35% for costs associated with overhead, we find that a Corporate Communications Manager, on average, earns $56.00 an hour. Accordingly, we have estimated the total salary cost associated with our amendments to Form 8–K to be $1,568,000.

Finally, our amendments to Form 20–F would incorporate Item 10 of Regulation S–K. While Regulation G provides a limited exception for foreign private issuers, this exception would not apply to their Form 20–F filing or any disclosure of non-GAAP financial measures made in the United States. Accordingly, the costs associated with our amendment to Form 20–F are already accounted for in our cost estimates for Regulation G.

V. Regulatory Flexibility Act Certification

Pursuant to 5 U.S.C. § 605(b), the Commission has certified that Regulation G and our amendments to Item 10 of Regulation S–B, Item 10 of Regulation S–K and Form 8–K under the Securities Act and the Exchange Act will not have a significant economic impact on a substantial number of small entities. This certification, including the basis for the certification, was included in the proposing release. We solicited comments on the potential impact of the amendments on small entities, but received none.

VI. Consideration of Impact on the Economy, Burden on Competition and Promotion of Efficiency, Competition and Capital Formation

Section 23(a)(2) of the Exchange Act[72] requires us to consider the anti-competitive effects of any rules that we adopt under the Exchange Act. Section 23(a)(2) prohibits us from adopting any rule that would impose a burden on competition not necessary or appropriate in furtherance of the purposes of the Exchange Act. Furthermore, Section 2(b) of the Securities Act[73] and Section 3(f) of the Exchange Act[74] require us, when engaging in rulemaking, to consider or determine whether an action is necessary or appropriate in the public interest, and consider whether the action will promote efficiency, competition, and capital formation.

We requested comment on any anti-competitive effects of the proposals. We did not receive any comments regarding any anti-competitive effects of the proposal. We do not believe that Regulation G or our amendments to Item 10 of Regulation S–K, Item 10 of Regulation S–B, Form 8–K or Form 20–F will have a quantifiable effect on

[70] The cost estimates are based on the SIA Report for employees based outside the New York City metropolitan area.

[71] However, see the guidance on the use of per share measures in footnote 11.

[72] 15 U.S.C. § 78w(a)(2).

[73] 15 U.S.C § 77b(b).

[74] 15 U.S.C. § 78c(f).

efficiency, competition, and capital formation.

VII. Statutory Basis

New Regulation G, new Item 12 to Form 8–K and the amendments to the General Instructions to Form 8–K, Item 10 of Regulation S–K, Item 10 of Regulation S–B and Form 20–F are being adopted pursuant to Sections 2(b), 6, 7, 8, 19(a), and 28 of the Securities Act of 1933, as amended, Sections 3, 4, 10, 12, 13, 15, 23, and 36 of the Securities Exchange Act of 1934, as amended, and Sections 3(a), 401, and 409 of the Sarbanes-Oxley Act.

List of Subjects

17 CFR Part 228

Reporting and recordkeeping requirements, Securities, Small businesses.

17 CFR Parts 229, 244 and 249

Reporting and recordkeeping requirements, Securities.

Text of the Amendments

In accordance with the foregoing, the Securities and Exchange Commission amends Title 17, chapter II of the Code of Federal Regulations as follows:

PART 228—INTEGRATED DISCLOSURE SYSTEM FOR SMALL BUSINESS ISSUERS

1. The general authority citation for Part 228 is revised to read as follows:

Authority: 15 U.S.C. 77e, 77f, 77g, 77h, 77j, 77k, 77s, 77z–2, 77z–3, 77aa(25), 77aa(26), 77ddd, 77eee, 77ggg, 77hhh, 77jjj, 77nnn, 77sss, 78l, 78m, 78n, 78o, 78u-5, 78w, 78ll, 78mm, 80a-8, 80a-29, 80a–30, 80a–37 and 80b–11.

* * * * *

2. Amend § 228.10 by adding paragraph (h) to read as follows:

§ 228.10 (Item 10) General.

* * * * *

(h) *Use of non-GAAP financial measures in Commission filings.* (1) Whenever one or more non-GAAP financial measures are included in a filing with the Commission:

(i) The registrant must include the following in the filing:

(A) A presentation, with equal or greater prominence, of the most directly comparable financial measure or measures calculated and presented in accordance with Generally Accepted Accounting Principles (GAAP);

(B) A reconciliation (by schedule or other clearly understandable method), which shall be quantitative for historical non-GAAP measures presented, and quantitative, to the extent available without unreasonable efforts, for forward-looking information, of the differences between the non-GAAP financial measure disclosed or released with the most directly comparable financial measure or measures calculated and presented in accordance with GAAP identified in paragraph (h)(1)(i)(A) of this section;

(C) A statement disclosing the reasons why the registrant's management believes that presentation of the non-GAAP financial measure provides useful information to investors regarding the registrant's financial condition and results of operations; and

(D) To the extent material, a statement disclosing the additional purposes, if any, for which the registrant's management uses the non-GAAP financial measure that are not disclosed pursuant to paragraph (h)(1)(i)(C) of this section; and

(ii) A registrant must not:

(A) Exclude charges or liabilities that required, or will require, cash settlement, or would have required cash settlement absent an ability to settle in another manner, from non-GAAP liquidity measures, other than the measures earnings before interest and taxes (EBIT) and earnings before interest, taxes, depreciation, and amortization (EBITDA);

(B) Adjust a non-GAAP performance measure to eliminate or smooth items identified as non-recurring, infrequent or unusual, when the nature of the charge or gain is such that it is reasonably likely to recur within two years or there was a similar charge or gain within the prior two years;

(C) Present non-GAAP financial measures on the face of the registrant's financial statements prepared in accordance with GAAP or in the accompanying notes;

(D) Present non-GAAP financial measures on the face of any pro forma financial information required to be disclosed by Article 11 of Regulation S-X (17 CFR 210.11–01 through 210.11–03); or

(E) Use titles or descriptions of non-GAAP financial measures that are the same as, or confusingly similar to, titles or descriptions used for GAAP measures; and

(iii) If the filing is not an annual report on Form 10–KSB (17 CFR 249.310b), a registrant need not include the information required by paragraphs (h)(1)(i)(C) and (h)(1)(i)(D) of this section if that information was included in its most recent annual report on Form 10-KSB or a more recent filing, provided that the required information is updated to the extent necessary to meet the requirements of paragraphs (h)(1)(i)(C) and (h)(1)(i)(D) of this section at the time of the registrant's current filing.

(2) For purposes of this paragraph (h), a non-GAAP financial measure is a numerical measure of a registrant's historical or future financial performance, financial position or cash flow that:

(i) Excludes amounts, or is subject to adjustments that have the effect of excluding amounts, that are included in the most directly comparable measure calculated and presented in accordance with GAAP in the statement of income, balance sheet or statement of cash flows (or equivalent statements) of the issuer; or

(ii) Includes amounts, or is subject to adjustments that have the effect of including amounts, that are excluded from the most directly comparable measure so calculated and presented.

(3) For purposes of this paragraph (h), GAAP refers to generally accepted accounting principles in the United States.

(4) For purposes of this paragraph (h), non-GAAP financial measures exclude:

(i) Operating and other statistical measures; and

(ii) Ratios or statistical measures calculated using exclusively one or both of:

(A) Financial measures calculated in accordance with GAAP; and

(B) Operating measures or other measures that are not non-GAAP financial measures.

(5) For purposes of this paragraph (h), non-GAAP financial measures exclude financial measures required to be disclosed by GAAP, Commission rules, or a system of regulation of a government or governmental authority or self-regulatory organization that is applicable to the registrant. However, the financial measure should be presented outside of the financial statements unless the financial measure is required or expressly permitted by the standard setter that is responsible for establishing the GAAP used in such financial statements.

(6) The requirements of paragraph (h) of this section shall not apply to a non-GAAP financial measure included in disclosure relating to a proposed business combination, the entity resulting therefrom or an entity that is a party thereto, if the disclosure is contained in a communication that is subject to § 230.425 of this chapter, § 240.14a–12 or § 240.14d–2(b)(2) of this chapter or § 229.1015 of this chapter.

PART 229—STANDARD INSTRUCTIONS FOR FILING FORMS UNDER SECURITIES ACT OF 1933, SECURITIES EXCHANGE ACT OF 1934 AND ENERGY POLICY AND CONSERVATION ACT OF 1975—REGULATION S–K

3. The general authority citation for part 229 is revised to read as follows:

Authority: 15 U.S.C. 7261, 77e, 77f, 77g, 77h, 77j, 77k, 77s, 77z–2, 77z–3, 77aa(25), 77aa(26), 77ddd, 77eee, 77ggg, 77hhh, 77iii, 77jjj, 77nnn, 77sss, 78c, 78i, 78j, 78*l,* 78m, 78n, 78o, 78u–5, 78w, 78*ll*(d), 78mm, 79e, 79n, 79t, 80a–8, 80a–29, 80a–30, 80a–31(c), 80a–37, 80a–38(a) and 80b–11, unless otherwise noted.

* * * * *

4. Amend § 229.10 by revising the section heading and adding paragraph (e) to read as follows:

§ 229.10 (Item 10) General.

* * * * *

(e) *Use of non-GAAP financial measures in Commission filings.* (1) Whenever one or more non-GAAP financial measures are included in a filing with the Commission:

(i) The registrant must include the following in the filing:

(A) A presentation, with equal or greater prominence, of the most directly comparable financial measure or measures calculated and presented in accordance with Generally Accepted Accounting Principles (GAAP);

(B) A reconciliation (by schedule or other clearly understandable method), which shall be quantitative for historical non-GAAP measures presented, and quantitative, to the extent available without unreasonable efforts, for forward-looking information, of the differences between the non-GAAP financial measure disclosed or released with the most directly comparable financial measure or measures calculated and presented in accordance with GAAP identified in paragraph (e)(1)(i)(A) of this section;

(C) A statement disclosing the reasons why the registrant's management believes that presentation of the non-GAAP financial measure provides useful information to investors regarding the registrant's financial condition and results of operations; and

(D) To the extent material, a statement disclosing the additional purposes, if any, for which the registrant's management uses the non-GAAP financial measure that are not disclosed pursuant to paragraph (e)(1)(i)(C) of this section; and

(ii) A registrant must not:

(A) Exclude charges or liabilities that required, or will require, cash settlement, or would have required cash settlement absent an ability to settle in another manner, from non-GAAP liquidity measures, other than the measures earnings before interest and taxes (EBIT) and earnings before interest, taxes, depreciation, and amortization (EBITDA);

(B) Adjust a non-GAAP performance measure to eliminate or smooth items identified as non-recurring, infrequent or unusual, when the nature of the charge or gain is such that it is reasonably likely to recur within two years or there was a similar charge or gain within the prior two years;

(C) Present non-GAAP financial measures on the face of the registrant's financial statements prepared in accordance with GAAP or in the accompanying notes;

(D) Present non-GAAP financial measures on the face of any *pro forma* financial information required to be disclosed by Article 11 of Regulation S–X (17 CFR 210.11–01 through 210.11–03); or

(E) Use titles or descriptions of non-GAAP financial measures that are the same as, or confusingly similar to, titles or descriptions used for GAAP financial measures; and

(iii) If the filing is not an annual report on Form 10–K or Form 20–F (17 CFR 249.220f), a registrant need not include the information required by paragraphs (e)(1)(i)(C) and (e)(1)(i)(D) of this section if that information was included in its most recent annual report on Form 10–K or Form 20–F or a more recent filing, provided that the required information is updated to the extent necessary to meet the requirements of paragraphs (e)(1)(i)(C) and (e)(1)(i)(D) of this section at the time of the registrant's current filing.

(2) For purposes of this paragraph (e), a non-GAAP financial measure is a numerical measure of a registrant's historical or future financial performance, financial position or cash flows that:

(i) Excludes amounts, or is subject to adjustments that have the effect of excluding amounts, that are included in the most directly comparable measure calculated and presented in accordance with GAAP in the statement of income, balance sheet or statement of cash flows (or equivalent statements) of the issuer; or

(ii) Includes amounts, or is subject to adjustments that have the effect of including amounts, that are excluded from the most directly comparable measure so calculated and presented.

(3) For purposes of this paragraph (e), GAAP refers to generally accepted accounting principles in the United States, except that:

(i) In the case of foreign private issuers whose primary financial statements are prepared in accordance with non-U.S. generally accepted accounting principles, GAAP refers to the principles under which those primary financial statements are prepared; and

(ii) In the case of foreign private issuers that include a non-GAAP financial measure derived from or based on a measure calculated in accordance with U.S. generally accepted accounting principles, GAAP refers to U.S. generally accepted accounting principles for purposes of the application of the requirements of this paragraph (e) to the disclosure of that measure.

(4) For purposes of this paragraph (e), non-GAAP financial measures exclude:

(i) Operating and other statistical measures; and

(ii) Ratios or statistical measures calculated using exclusively one or both of:

(A) Financial measures calculated in accordance with GAAP; and

(B) Operating measures or other measures that are not non-GAAP financial measures.

(5) For purposes of this paragraph (e), non-GAAP financial measures exclude financial measures required to be disclosed by GAAP, Commission rules, or a system of regulation of a government or governmental authority or self-regulatory organization that is applicable to the registrant. However, the financial measure should be presented outside of the financial statements unless the financial measure is required or expressly permitted by the standard-setter that is responsible for establishing the GAAP used in such financial statements.

(6) The requirements of paragraph (e) of this section shall not apply to a non-GAAP financial measure included in disclosure relating to a proposed business combination, the entity resulting therefrom or an entity that is a party thereto, if the disclosure is contained in a communication that is subject to § 230.425 of this chapter, § 240.14a–12 or § 240.14d–2(b)(2) of this chapter or § 229.1015 of this chapter.

(7) The requirements of paragraph (e) of this section shall not apply to investment companies registered under section 8 of the Investment Company Act of 1940 (15 U.S.C. 80a–8).

Note to paragraph (e). A non-GAAP financial measure that would otherwise be prohibited by paragraph (e)(1)(ii) of

this section is permitted in a filing of a foreign private issuer if:

1. The non-GAAP financial measure relates to the GAAP used in the registrant's primary financial statements included in its filing with the Commission;

2. The non-GAAP financial measure is required or expressly permitted by the standard-setter that is responsible for establishing the GAAP used in such financial statements; and

3. The non-GAAP financial measure is included in the annual report prepared by the registrant for use in the jurisdiction in which it is domiciled, incorporated or organized or for distribution to its security holders.

5. Part 244 is added to read as follows:

PART 244—REGULATION G

Sec.

244.100 General rules regarding disclosure of non-GAAP financial measures.
244.101 Definitions.
244.102 No effect on antifraud liability.

Authority: 15 U.S.C. 7261, 78c, 78i, 78j, 78m, 78o, 78w, 78mm, and 80a–29

§ 244.100 General rules regarding disclosure of non-GAAP financial measures.

(a) Whenever a registrant, or person acting on its behalf, publicly discloses material information that includes a non-GAAP financial measure, the registrant must accompany that non-GAAP financial measure with:

(1) A presentation of the most directly comparable financial measure calculated and presented in accordance with Generally Accepted Accounting Principles (GAAP); and

(2) A reconciliation (by schedule or other clearly understandable method), which shall be quantitative for historical non-GAAP measures presented, and quantitative, to the extent available without unreasonable efforts, for forward-looking information, of the differences between the non-GAAP financial measure disclosed or released with the most comparable financial measure or measures calculated and presented in accordance with GAAP identified in paragraph (a)(1) of this section.

(b) A registrant, or a person acting on its behalf, shall not make public a non-GAAP financial measure that, taken together with the information accompanying that measure and any other accompanying discussion of that measure, contains an untrue statement of a material fact or omits to state a material fact necessary in order to make the presentation of the non-GAAP financial measure, in light of the circumstances under which it is presented, not misleading.

(c) This section shall not apply to a disclosure of a non-GAAP financial measure that is made by or on behalf of a registrant that is a foreign private issuer if the following conditions are satisfied:

(1) The securities of the registrant are listed or quoted on a securities exchange or inter-dealer quotation system outside the United States;

(2) The non-GAAP financial measure is not derived from or based on a measure calculated and presented in accordance with generally accepted accounting principles in the United States; and

(3) The disclosure is made by or on behalf of the registrant outside the United States, or is included in a written communication that is released by or on behalf of the registrant outside the United States.

(d) This section shall not apply to a non-GAAP financial measure included in disclosure relating to a proposed business combination, the entity resulting therefrom or an entity that is a party thereto, if the disclosure is contained in a communication that is subject to § 230.425 of this chapter, § 240.14a–12 or § 240.14d–2(b)(2) of this chapter or § 229.1015 of this chapter.

Notes to § 244.100: 1.If a non-GAAP financial measure is made public orally, telephonically, by Web cast, by broadcast, or by similar means, the requirements of paragraphs (a)(1)(i) and (a)(1)(ii) of this section will be satisfied if:

(i) The required information in those paragraphs is provided on the registrant's Web site at the time the non-GAAP financial measure is made public; and

(ii) The location of the web site is made public in the same presentation in which the non-GAAP financial measure is made public.

2. The provisions of paragraph (c) of this section shall apply notwithstanding the existence of one or more of the following circumstances:

(i) A written communication is released in the United States as well as outside the United States, so long as the communication is released in the United States contemporaneously with or after the release outside the United States and is not otherwise targeted at persons located in the United States;

(ii) Foreign journalists, U.S. journalists or other third parties have access to the information;

(iii) The information appears on one or more web sites maintained by the registrant, so long as the web sites, taken together, are not available exclusively to, or targeted at, persons located in the United States; or

(iv) Following the disclosure or release of the information outside the United States, the information is included in a submission by the registrant to the Commission made under cover of a Form 6–K.

§ 244.101 Definitions.

This section defines certain terms as used in Regulation G (§§ 244.100 through 244.102).

(a)(1) *Non-GAAP financial measure.* A non-GAAP financial measure is a numerical measure of a registrant's historical or future financial performance, financial position or cash flows that:

(i) Excludes amounts, or is subject to adjustments that have the effect of excluding amounts, that are included in the most directly comparable measure calculated and presented in accordance with GAAP in the statement of income, balance sheet or statement of cash flows (or equivalent statements) of the issuer; or

(ii) Includes amounts, or is subject to adjustments that have the effect of including amounts, that are excluded from the most directly comparable measure so calculated and presented.

(2) A non-GAAP financial measure does not include operating and other financial measures and ratios or statistical measures calculated using exclusively one or both of:

(i) Financial measures calculated in accordance with GAAP; and

(ii) Operating measures or other measures that are not non-GAAP financial measures.

(3) A non-GAAP financial measure does not include financial measures required to be disclosed by GAAP, Commission rules, or a system of regulation of a government or governmental authority or self-regulatory organization that is applicable to the registrant.

(b) *GAAP.* GAAP refers to generally accepted accounting principles in the United States, except that:

(1) In the case of foreign private issuers whose primary financial statements are prepared in accordance with non-U.S. generally accepted accounting principles, GAAP refers to the principles under which those primary financial statements are prepared; and

(2) In the case of foreign private issuers that include a non-GAAP financial measure derived from a measure calculated in accordance with U.S. generally accepted accounting principles, GAAP refers to U.S. generally accepted accounting

principles for purposes of the application of the requirements of Regulation G to the disclosure of that measure.

(c) *Registrant.* A registrant subject to this regulation is one that has a class of securities registered under Section 12 of the Securities Exchange Act of 1934 (15 U.S.C. 78*l*), or is required to file reports under Section 15(d) of the Securities Exchange Act of 1934 (15 U.S.C. 78o(d)), excluding any investment company registered under Section 8 of the Investment Company Act of 1940 (15 U.S.C. 80a–8).

(d) *United States.* United States means the United States of America, its territories and possessions, any State of the United States, and the District of Columbia.

§ 244.102 No effect on antifraud liability.

Neither the requirements of this Regulation G (17 CFR 244.100 through 244.102) nor a person's compliance or non-compliance with the requirements of this Regulation shall in itself affect any person's liability under Section 10(b) (15 U.S.C. 78j(b)) of the Securities Exchange Act of 1934 or § 240.10b–5 of this chapter.

PART 249—FORMS, SECURITIES EXCHANGE ACT OF 1934

7. The authority citation for part 249 continues to read in part as follows:

Authority: 15 U.S.C. 78a, *et seq.*, unless otherwise noted.

* * * * *

8. Amend Form 8–K (referenced in § 249.308) by adding General Instruction B.6., revising Item 9 and adding Item 12.

Note—The text of Form 8–K does not, and this amendment will not, appear in the Code of Federal Regulations.

Form 8–K

Current Report

Pursuant to Section 13 or 15(d) of the Securities Exchange Act of 1934

* * * * *

General Instructions

* * * * *

B. Events To Be Reported and Time of Filing for Reports

* * * * *

6. A report on this form is required to be furnished upon the occurrence of any of the events specified in Item 12 of this form. A report of an event specified in Item 12 is to be furnished within 5 business days after the occurrence of the event; if the event occurs on a Saturday, Sunday or holiday on which the Commission is not open for business, the 5 business day period shall begin to run on and include the first business day thereafter. The information in a report furnished pursuant to Item 12 shall not be deemed to be ''filed'' for purposes of Section 18 of the Exchange Act or otherwise subject to the liability of that section, except if the registrant specifically states that the information is to be considered ''filed'' under the Exchange Act or incorporates it by reference into a filing under the Securities Act or the Exchange Act.

* * * * *

Information To Be Included in the Report

* * * * *

Item 12. Results of Operations and Financial Condition

(a) If a registrant, or any person acting on its behalf, makes any public announcement or release (including any update of an earlier announcement or release) disclosing material non-public information regarding the registrant's results of operations or financial condition for a completed quarterly or annual fiscal period, the registrant shall briefly identify the announcement or release and include the text of that announcement or release as an exhibit;

(b) A Form 8–K is not required to be furnished to the Commission under this Item 12 in the case of disclosure of material non-public information that is disclosed orally, telephonically, by webcast, by broadcast, or by similar means if:

(1) The information is provided as part of a presentation that is complementary to, and initially occurs within 48 hours after, a related, written announcement or release that has been furnished on Form 8–K pursuant to this Item 12 prior to the presentation;

(2) The presentation is broadly accessible to the public by dial-in conference call, by webcast, by broadcast, or by similar means;

(3) The financial and other statistical information contained in the presentation is provided on the registrant's web site, together with any information that would be required under § 244.100 of Regulation G; and

(4) The presentation was announced by a widely disseminated press release, that included instructions as to when and how to access the presentation and the location on the registrant's web site where the information would be available.

Instructions

1. The requirements of this Item 12 are triggered by the disclosure of material non-public information regarding a completed fiscal year or quarter. Release of additional or updated material non-public information regarding a completed fiscal year or quarter would trigger an additional Item 12 requirement.

2. The requirements of paragraph (e)(1)(i) of Item 10 of Regulation S–K (or paragraph (h)(1)(i) of Item 10 of Regulation S–B in the case of a small business issuer) shall apply to disclosures under this Item 12.

3. Issuers that make earnings announcements or other disclosures of material non-public information regarding a completed fiscal year or quarter in an interim or annual report to shareholders, are permitted to specify which portion of the report contains the information required to be furnished under Item 12.

4. This Item 12 does not apply in the case of a disclosure that is made in a quarterly report filed with the Commission on Form 10–Q (or 10–QSB) or an annual report filed with the Commission on Form 10–K (or 10–KSB).

* * * * *

9. By amending Form 20–F (referenced in § 249.220) by removing in General Instruction C.(e) the words ''performance and the Commission's policy on securities ratings'' and adding, in their place, the words ''performance, the Commission's policy on securities ratings, and the Commission's policy on use of non-GAAP financial measures in Commission filings''.

By the Commission.

Dated: January 22, 2003.

Margaret H. McFarland,

Deputy Secretary.

[FR Doc. 03–1977 Filed 1–29–03; 8:45 am]

BILLING CODE 8010–01–P

Federal Register

Thursday,
January 30, 2003

Part III

Environmental Protection Agency

40 CFR Parts 52 and 81

Determination of Nonattainment as of November 15, 1996, and Reclassification of the St. Louis Ozone Nonattainment Area; Approval and Promulgation of Implementation Plans for the State of Missouri; Determination of Attainment, Approval and Promulgation of Implementation Plans, and Designation of Areas for Air Quality Planning Purposes; States of Missouri and Illinois; Final Rule and Proposed Rules

ENVIRONMENTAL PROTECTION AGENCY

40 CFR Part 81

[MO 169–1169; IL 187–2; FRL–7444–4]

Determination of Nonattainment as of November 15, 1996, and Reclassification of the St. Louis Ozone Nonattainment Area; States of Missouri and Illinois

AGENCY: Environmental Protection Agency (EPA).

ACTION: Final rule.

SUMMARY: This rule finalizes and makes effective EPA's finding that the St. Louis ozone nonattainment area (hereinafter referred to as the St. Louis area) failed to attain the 1-hour ozone national ambient air quality standard (NAAQS or standard) by November 15, 1996, the attainment date for moderate nonattainment areas set forth in the Clean Air Act (CAA or Act). As a result of this finding, the St. Louis area is reclassified from a moderate to a serious 1-hour ozone nonattainment area by operation of law, effective as of the date of publication. In addition, EPA is establishing a schedule for Missouri and Illinois to submit State Implementation Plan (SIP) revisions addressing the CAA's pollution control requirements for serious ozone nonattainment areas within 12 months of the effective date of this rule, and is establishing November 15, 2004, as the date by which the St. Louis area must attain the ozone NAAQS.

EFFECTIVE DATE: This rule is effective January 30, 2003.

ADDRESSES: Relevant documents for this rule are available for inspection at the Environmental Protection Agency, Region 7, Air Planning and Development Branch, 901 North 5th Street, Kansas City, Kansas 66101; or the Environmental Protection Agency, Region 5, Regulation Development Section, Air Programs Branch (AR–18J), 77 West Jackson Boulevard, Chicago, Illinois 60604; interested persons wanting to examine these documents should make an appointment with the appropriate office at least 24 hours in advance.

FOR FURTHER INFORMATION CONTACT: Tony Petruska, Region 7, (913) 551–7637, (*petruska.anthony@epa.gov*), or Edward Doty, Region 5, (312) 886–6057 (*doty.edward@epa.gov*).

SUPPLEMENTARY INFORMATION:

Table of Contents

What Is the Background for this Action?
What Are the National Ambient Air Quality Standards?
What Is the NAAQS for Ozone?
What Is a SIP?
What Is the St. Louis Ozone Nonattainment Area?
What Does This Action Do?
What Is the New Attainment Date for the St. Louis Area?
When Must Missouri and Illinois Submit SIP Revisions Fulfilling the Requirements for Serious Ozone Nonattainment Areas?
What Is the Effective Date of the Reclassification to a Serious Nonattainment Area?
Statutory and Executive Order Reviews

What Is the Background for This Action?

On November 25, 2002, the U.S. Court of Appeals for the Seventh Circuit (Court) issued a decision in the case of the *Sierra Club and Missouri Coalition for the Environment* v. *EPA,* 311 F. 3d 853 (7th Cir. 2002). In this decision, the Court vacated a June 26, 2001, rule which extended the St. Louis area's attainment date, and remanded to EPA for entry of a final rule that reclassifies the St. Louis area as a serious nonattainment area. This rule reclassifies the St. Louis area as a serious nonattainment area in accordance with the Court's Order. The reclassification is based on a finding that the area did not attain the 1-hour ozone standard by November 15, 1996, the statutory attainment date for moderate areas. The finding is based on monitored data for the 1994 through 1996 ozone seasons. As explained in more detail below, EPA originally proposed to find that the area failed to attain the ozone standard by November 15, 1996, and to reclassify the area to serious nonattainment in a proposed rulemaking published March 18, 1999 (64 FR 13384). EPA finalized the finding and reclassification in a rulemaking published March 19, 2001 (66 FR 15578), and withdrew that final rulemaking prior to its effective date in the June 26, 2001, rulemaking vacated by the Court. In response to the Court's order, EPA is reinstating the finding of nonattainment and notice of reclassification, effective today, and to reflect the new effective date, is reinstating the schedule for Missouri and Illinois to submit SIP revisions to meet the new serious area requirements.

In a separate rulemaking, EPA is proposing to redesignate the St. Louis area to attainment with the 1-hour ozone standard. The proposal is based, in part, on three years of complete, quality-assured, ambient air monitoring data for the 2000 through 2002 ozone seasons which EPA believes shows that the area has now attained the 1-hour ozone NAAQS. Redesignation to attainment would eliminate the need for the states of Missouri and Illinois to submit SIP revisions addressing the CAA's pollution control requirements for serious ozone nonattainment areas. However, should the St. Louis area not be redesignated to attainment, the states of Missouri and Illinois will continue to be required to submit the serious area SIP revisions within one year as specified in this rule.

What Are the National Ambient Air Quality Standards?

Since the CAA's inception in 1970, EPA has set NAAQS for six common air pollutants: carbon monoxide, lead, nitrogen dioxide, ozone, particulate matter, and sulfur dioxide. The CAA requires that these standards be set at levels that protect public health and welfare with an adequate margin of safety. These standards present state and local governments with the air quality levels they must meet to achieve clean air. Also, these standards allow the American people to assess whether or not the air quality in their communities is healthful.

What Is the NAAQS for Ozone?

The NAAQS for ozone is expressed in two forms which are referred to as the 1-hour and 8-hour standards. Table 1 summarizes the ozone standards.

TABLE 1.—SUMMARY OF OZONE STANDARDS

Standard	Value	Type	Method of compliance
1-hour	0.12 ppm	Primary and Secondary	Must not be exceeded, on average, more than one day per year over any three-year period at any monitor within an area.
8-hour annual	0.08 ppm	Primary and Secondary	The average of the fourth highest daily maximum 8-hour average ozone concentration measured at each monitor over any three-year period.

(Primary standards are designed to protect public health and secondary standards are designed to protect public welfare and the environment.)

The 1-hour ozone standard of 0.12 parts per million (ppm) was promulgated in 1979. The 1-hour ozone standard continues to apply to the St. Louis area, and it is the classification of the St. Louis area with respect to the 1-hour ozone standard that is addressed in this document.

What Is a SIP?

Section 110 of the CAA requires states to develop air pollution regulations and control strategies to ensure that state air quality meet the NAAQS established by EPA. These ambient standards are established under section 109 of the CAA, and they currently address six criteria pollutants: Carbon monoxide, nitrogen dioxide, ozone, lead, particulate matter, and sulfur dioxide.

Each state must submit these regulations and control strategies to us for approval and incorporation into the Federally-enforceable SIP.

Each Federally-approved SIP protects air quality primarily by addressing air pollution at its point of origin. These SIPs can be extensive. They may contain state regulations or other enforceable documents and supporting information such as emission inventories, monitoring networks, and modeling demonstrations.

What Is the St. Louis Ozone Nonattainment Area?

The St. Louis ozone nonattainment area is an interstate area which includes Madison, Monroe, and St. Clair Counties in Illinois; and Franklin, Jefferson, St. Charles, and St. Louis Counties and the City of St. Louis in Missouri.

Under section 107(d)(1)(C) of the CAA, each ozone area designated nonattainment for the 1-hour ozone standard prior to enactment of the 1990 CAA Amendments, such as the St. Louis area, was designated nonattainment by operation of law upon enactment of the 1990 Amendments. In addition, under section 181(a) of the Act, each area designated nonattainment under section 107(d) was classified as ''marginal,'' ''moderate,'' ''serious,'' ''severe,'' or ''extreme,'' depending on the severity of the area's air quality problem. The design value for an area, *i.e.*, the highest of the fourth highest 1-hour daily maximums in a given three-year period, characterizes the severity of the air quality problem. Table 2 provides the design value ranges for each nonattainment classification. Ozone nonattainment areas with design values between 0.138 and 0.160 ppm, such as the St. Louis area (which had a design value of 0.156 ppm in 1989), were classified as moderate. These nonattainment designations and classifications were initially codified in 40 CFR part 81 (see 56 FR 56694, November 6, 1991).

TABLE 2.—OZONE NONATTAINMENT CLASSIFICATIONS

Area class	Design value (ppm)	Attainment
Marginal	0.121 up to 0.138	November 15, 1993.
Moderate	0.138 up to 0.160	November 15, 1996.
Serious	0.160 up to 0.180	November 15, 1999.
Severe	0.180 up to 0.280	November 15, 2005.
Extreme	0.280 and above	November 15, 2010.

In addition, under section 182(b)(1)(A) of the CAA, states containing areas that were classified as moderate nonattainment were required to submit SIPs to provide for certain air pollution controls, to show progress toward attainment of the ozone standard through incremental emissions reductions, and to provide for attainment of the ozone standard as expeditiously as practicable, but no later than November 15, 1996. SIP requirements for moderate areas are listed primarily in section 182(b) of the CAA.

What Does This Action Do?

On March 18, 1999, EPA proposed (64 FR 13384) its finding that the St. Louis area did not attain the 1-hour ozone NAAQS by November 15, 1996, as required by the CAA. The proposed finding was based on 1994–1996 air quality data which indicated the area's air quality violated the standard and the area did not qualify for an attainment date extension under the provisions of section 181(a)(5).[1] Under the CAA, the effect of a final finding that an area has not attained the 1-hour ozone standard by the attainment date is that the area is reclassified to a higher classification (commonly referred to as a ''bump up'' of the area).

Although the area was not eligible for an attainment date extension under section 181(a)(5), the March 18, 1999, proposal included a notice of the St. Louis area's potential eligibility for an attainment date extension, pursuant to EPA's July 16, 1998, ''Guidance on Extension of Air Quality Attainment Dates for Downwind Transport Areas'' (hereinafter referred to as the extension policy), signed by Richard D. Wilson, Acting Assistant Administrator for Air and Radiation. The extension policy, published in a March 25, 1999, **Federal Register** notice (64 FR 14441), addresses circumstances where pollution from upwind areas interferes with the ability of a downwind area to attain the 1-hour ozone standard by its attainment date.

EPA proposed to finalize its action on the determination of nonattainment and reclassification of the St. Louis area only after the area had received an opportunity to qualify for an attainment date extension under the extension policy. On January 29, 2001, the U.S. District Court for the District of Columbia ordered EPA to make a determination whether the St. Louis nonattainment area attained the requisite ozone standards. (*Sierra Club* v. *Whitman,* No. 98–2733 (CKK).)

On March 19, 2001 (66 FR 15578), EPA finalized its finding that the St. Louis area failed to attain the 1-hour ozone NAAQS by November 15, 1996, and reclassified the area to ''serious'' as of the effective date of the rule. In addition, that rule established the dates by which Missouri and Illinois were to submit SIP revisions addressing the CAA's pollution control requirements for serious ozone nonattainment areas and attain the 1-hour NAAQS for ozone. The March 19, 2001, rulemaking action was to be effective on May 18, 2001.

On May 16, 2001, EPA published a rule (66 FR 27036) extending the effective date of the March 19, 2001, rulemaking to June 29, 2001.

[1] Section 181(a)(5) specifies that a state may request, and EPA may grant, up to two one-year attainment date extensions. EPA may grant an extension if: (1) The state has complied with the requirements and commitments pertaining to the applicable implementation plan for the area, and (2) the area has measured no more than one exceedance of the ozone standard at any monitoring site in the nonattainment area in the year in which attainment is required.

On June 26, 2001, EPA issued a final rule (66 FR 33996) in which EPA extended the attainment date for the St. Louis area, consistent with the extension policy, and withdrew the March 19, 2001, rulemaking. The rule also approved the attainment demonstration for the St. Louis area and took several other related actions.

Petitions were filed in the U.S. Court of Appeals for the Seventh Circuit (Court) (*Sierra Club and Missouri Coalition for the Environment* v. *EPA,* (Nos. 01–2844 and 01–2845)) for review of the May 16, 2001, and June 26, 2001, rules. On November 25, 2002, the Court granted the petitions, vacated the June 26, 2001, rule extending the St. Louis area's attainment date, and remanded to EPA for ''entry of a final rule that reclassifies St. Louis as a serious nonattainment area effective immediately * * *'' (*Sierra Club and Missouri Coalition for the Environment* v. *EPA,* 311 F. 3d 853 (7th Cir. 2002)).

This rule reclassifies the St. Louis area as a serious nonattainment area in accordance with the Court's Order, and in accordance with section 181(b)(2)(A) of the CAA. Additional background for this rule may be found in the March 18, 1999, proposal (64 FR 13384) and in the March 19, 2001, final rule (66 FR 15578). This action reinstates EPA's finding that the St. Louis area failed to attain the 1-hour standard by November 15, 1996, as prescribed in Section 181 of the CAA. A summary and discussion of the air quality monitoring data for the St. Louis area for 1994 through 1996 used to make this finding can be found in the March 18, 1999, proposal (64 FR 13384, 13385–87) and in the March 19, 2001, rule (66 FR 15578, 15580–15581, 15583–15584). EPA incorporates by reference in this rule the analyses and discussion of the air quality monitoring data and of the area's new classification set forth in the March 18, 1999, proposed rule and in the March 19, 2001, final rule.

EPA received comments on the March 18, 1999, proposal (and on an April 17, 2000, proposal, 65 FR 20404—see 66 FR 15585–15586 for a discussion of comments on the April 17, 2000, proposal) relating to the necessity and scope of a reclassification of the St. Louis area, which are summarized in the March 19, 2001, final rule (66 FR 15578, 15585–15587). The final rule also contains EPA's detailed response to the comments, which is incorporated by reference in this final rule.

What Is the New Attainment Date for the St. Louis Area?

As part of the reclassification of an area, EPA must establish an attainment date for the reclassified area. Section 181 of the CAA states that the attainment date for serious nonattainment areas shall be as expeditiously as practicable but not later than 9 years after enactment (November 15, 1999). Where an attainment date has already passed and is therefore impossible to meet, EPA has reasoned that the Administrator may establish an attainment date later than the date specified in the CAA. However, EPA believes that it must establish a new attainment date in accordance with the principle in the CAA that attainment must be achieved as expeditiously as practicable.

In the March 19, 2001, rule (66 FR 15578), EPA set forth its reasoning and conclusion that the most appropriate attainment date is one which is as expeditious as practicable and accounts for the upwind reductions associated with the NO_X SIP call, or no later than November 15, 2004. In the March 19, 2001, rule (66 FR 15578, 15587), EPA summarized the comments on the appropriate attainment date for the reclassified area and provided EPA's responses to the comments. EPA incorporates its responses and its rationale by reference in this final rule.

When Must Missouri and Illinois Submit SIP Revisions Fulfilling the Requirements for Serious Ozone Nonattainment Areas?

In addition to establishing a new attainment date, EPA must also address the schedule by which Illinois and Missouri are required to submit SIP revisions meeting the CAA's pollution control requirements for serious areas. The measures required by section 182(c) of the CAA include, but are not limited to, the following: (1) Attainment and reasonable further progress demonstrations; (2) enhanced vehicle inspection and maintenance (I/M) programs; (3) clean-fuel vehicle programs; (4) the major source threshold lowered from 100 to 50 tons per year for volatile organic compounds (VOCs) and nitrogen oxide compounds (NO_X); (5) more stringent new source review requirements; (6) an enhanced air monitoring program; and (7) contingency provisions.

In the March 18, 1999, proposal (64 FR 13384) and in the March 19, 2001, rule (66 FR 15585), EPA stated that a submittal deadline of 12 months after the effective date of reclassification will give the states adequate time to adopt and submit the additional serious area requirements. EPA also noted that the 12-month deadline is consistent with the time given to other areas (such as Dallas-Fort Worth, Phoenix, and Santa Barbara) which were reclassified from moderate to serious. EPA received one comment in support of a 12-month deadline and no other comments on the proposed deadline. In the March 19, 2001, rule, EPA required Missouri and Illinois to submit SIP revisions addressing the Act's pollution control requirements for serious ozone nonattainment areas within 12 months of the effective date of the rule.

EPA has determined that a 12-month deadline for submitting SIP revisions meeting the CAA's pollution control requirements for serious areas is appropriate for the reasons stated in the March 19, 2001, rule. Therefore, EPA is requiring that the ''serious'' area measures be submitted within 12 months of the date of publication of this rule.

What Is the Effective Date of the Reclassification to a Serious Nonattainment Area?

The Court, in its November 25, 2002, Order, vacated the June 26, 2001, rule (66 FR 33996) and remanded for entry of a final rule that reclassifies St. Louis as a serious nonattainment area effective immediately.

On May 16, 2001, EPA published a rule (66 FR 27036) delaying the effective date of reclassification of the St. Louis area to a serious nonattainment area until June 29, 2001. On June 26, 2001, EPA published a rule (66 FR 33996) in which the reclassification of the St. Louis area to a serious nonattainment area was withdrawn. By vacating the June 26, 2001, rule, the Court's Order also vacated the withdrawal of the reclassification.

One conclusion which could be drawn from the Court's Order vacating the June 26, 2001, rule is that the effective date of the reclassification to a serious nonattainment area reverts back to June 29, 2001. Such a conclusion would be inconsistent with the language used by the Court in its remand. The court ordered EPA to ''reclassify'' the St. Louis area, and to make the reclassification ''effective immediately.'' Thus, EPA believes that the Court intended for the reclassification of the St. Louis area to a serious nonattainment to be effective immediately upon publication of this rule.

Although it is not appropriate to make this rule retroactive, EPA is making this final rulemaking effective upon publication. Section 553(d) of the Administrative Procedures Act generally provides that rules may not take effect earlier than 30 days after they are published in the **Federal Register**. However, if an Agency identifies a good

cause, section 553(d)(3) allows a rule to take effect earlier, provided that the Agency publishes its reasoning in the final rule. EPA is making this action effective upon publication in order to comply with an order of the United States Court of Appeals for the Seventh Circuit. As discussed elsewhere in this rulemaking, the Court ordered EPA to publish this final rule and to make it immediately effective. Therefore, in accordance with section 553(d)(3), EPA finds good cause to establish the date of publication as the effective date of the rule.

For the foregoing reasons, EPA is establishing the date of publication as the effective date of this rule.

Statutory and Executive Order Reviews

A. Executive Order 12866, Regulatory Planning and Review

Under Executive Order 12866 (58 FR 51735, October 4, 1993), EPA is required to determine whether regulatory actions are significant and therefore should be subject to Office of Management and Budget (OMB) review, economic analysis, and the requirements of the Executive Order. The Executive Order defines a ''significant regulatory action'' as one that is likely to result in a rule that may meet at least one of the four criteria identified in section 3(f), including, under paragraph (1), that the rule may ''have an annual effect on the economy of $100 million or more or adversely affect, in a material way, the economy, a sector of the economy, productivity, competition, jobs, the environment, public health or safety, or state, local or tribal governments or communities.''

The Agency has determined that the determination of nonattainment would result in none of the effects identified in section 3(f) of the Executive Order. Under section 181(b)(2) of the CAA, determinations of nonattainment are based upon air quality considerations and the resulting reclassifications must occur by operation of law. They do not, in and of themselves, impose any new requirements on any sectors of the economy. In addition, because the statutory requirements are clearly defined with respect to the differently classified areas, and because those requirements are automatically triggered by classifications that, in turn, are triggered by air quality values, determinations of nonattainment and reclassification cannot be said to impose a materially adverse impact on state, local, or tribal governments or communities.

B. National Technology Transfer and Advancement Act

Section 12(d) of the National Technology Transfer and Advancement Act of 1995 (NTTAA), Public Law 104–113, section 12(d) (15 U.S.C. 272 note) directs EPA to use voluntary consensus standards in its regulatory activities unless to do so would be inconsistent with applicable law or otherwise impractical. Voluntary consensus standards are technical standards (*e.g.*, materials specifications, test methods, sampling procedures, and business practices) that are developed or adopted by voluntary consensus standards bodies. The NTTAA directs EPA to provide Congress, through OMB, explanations when the Agency decides not to use available and applicable voluntary consensus standards. This action does not involve technical standards. Therefore, EPA did not consider the use of any voluntary consensus standards.

C. Regulatory Flexibility Act

The Regulatory Flexibility Act (RFA) generally requires an agency to conduct a regulatory flexibility analysis of any rule subject to notice and comment rulemaking requirements unless the agency certifies that the rule will not have a significant economic impact on a substantial number of small entities. Small entities include small businesses, small not-for-profit enterprises, and small governmental jurisdictions.

Determinations of nonattainment and the resulting reclassification of nonattainment areas by operation of law under section 181(b)(2) of the CAA do not in and of themselves create any new requirements. Instead, this rulemaking only makes a factual determination, and does not directly regulate any entities. See 62 FR 60001, 60007–60008, and 60010 (November 6, 1997) for additional analysis of the RFA implications of attainment determinations. Therefore, pursuant to 5 U.S.C. 605(b), I certify that today's final action does not have a significant impact on a substantial number of small entities within the meaning of those terms for RFA purposes.

D. Unfunded Mandates Reform Act

Under section 202 of the Unfunded Mandates Reform Act of 1995 (UMRA), signed into law on March 22, 1995, EPA must prepare a budgetary impact statement to accompany any proposed or final rule that includes a Federal mandate that may result in estimated annual costs to state, local, or tribal governments in the aggregate, or to the private sector, of $100 million or more. Under section 205, EPA must select the most cost-effective and least burdensome alternative that achieves the objectives of the rule and is consistent with statutory requirements. Section 203 requires EPA to establish a plan for informing and advising any small governments that may be significantly or uniquely impacted by the rule.

EPA believes, as discussed above, that the finding of nonattainment is a factual determination based upon air quality considerations and that the resulting reclassification of the area must occur by operation of law. Thus, the finding does not constitute a Federal mandate, as defined in section 101 of the UMRA, because it does not impose an enforceable duty on any entity.

E. Executive Order 13045, Protection of Children From Environmental Health Risks and Safety Risks

Protection of Children from Environmental Health Risks and Safety Risks (62 FR 19885, April 23, 1997), applies to any rule that: (1) Is determined to be economically significant as defined under Executive Order 12866, and (2) concerns an environmental health or safety risk that EPA has reason to believe may have a disproportionate effect on children. If the regulatory action meets both criteria, the Agency must evaluate the environmental health or safety effects of the planned rule on children, and explain why the planned regulation is preferable to other potentially effective and reasonably feasible alternatives considered by the Agency. This action is not subject to Executive Order 13045 because it does not involve decisions intended to mitigate environmental health or safety risks.

F. Executive Order 13132, Federalism

Federalism (64 FR 43255, August 10, 1999) requires EPA to develop an accountable process to ensure ''meaningful and timely input by state and local officials in the development of regulatory policies that have federalism implications.'' ''Policies that have federalism implications'' is defined in the Executive Order to include regulations that have ''substantial direct effects on the states, on the relationship between the national government and the states, or on the distribution of power and responsibilities among the various levels of government.'' Under Executive Order 13132, EPA may not issue a regulation that has federalism implications, that imposes substantial direct compliance costs, and that is not required by statute, unless the Federal Government provides the funds

necessary to pay the direct compliance costs incurred by state and local governments, or EPA consults with state and local officials early in the process of developing the proposed regulation. EPA also may not issue a regulation that has federalism implications and that preempts state law unless the Agency consults with state and local officials early in the process of developing the proposed regulation.

This determination of nonattainment and the resulting reclassification of a nonattainment area by operation of law will not have substantial direct effects on the states, on the relationship between the national government and the states, or on the distribution of power and responsibilities among the various levels of government, as specified in Executive Order 13132, because this action does not, in and of itself, impose any new requirements on any sectors of the economy, and does not alter the relationship or the distribution of power and responsibilities established in the CAA. Thus, the requirements of section 6 of the Executive Order do not apply to these actions.

G. Executive Order 13175, Coordination With Indian Tribal Governments

Executive Order 13175, entitled ''Consultation and Coordination with Indian Tribal Governments'' (65 FR 67249, November 9, 2000), requires EPA to develop an accountable process to ensure ''meaningful and timely input by tribal officials in the development of regulatory policies that have tribal implications.'' This final rule does not have tribal implications, as specified in Executive Order 13175. It will not have substantial direct effects on tribal governments, on the relationship between the Federal government and Indian tribes, or on the distribution of power and responsibilities between the Federal government and Indian tribes. Thus, Executive Order 13175 does not apply to this rule.

H. Congressional Review Act

The Congressional Review Act, 5 U.S.C. 801 *et seq.*, as added by the Small Business Regulatory Enforcement Fairness Act of 1996, generally provides that before a rule may take effect, the agency promulgating the rule must submit a rule report, which includes a copy of the rule, to each House of the Congress and to the Comptroller General of the United States. EPA will submit a report containing this rule and other required information to the United States Senate, the United States House of Representatives, and the Comptroller General of the United States prior to publication of the rule in the **Federal Register**. A major rule cannot take effect until 60 days after it is published in the **Federal Register**. This action is not a ''major rule'' as defined by 5 U.S.C. 804(2).

I. Petitions for Judicial Review

Under section 307(b)(1) of the CAA, petitions for judicial review of this action must be filed in the United States Court of Appeals for the appropriate circuit by March 31, 2003. Filing a petition for reconsideration by the Administrator of this final rule does not affect the finality of this rule for the purposes of judicial review nor does it extend the time within which a petition for judicial review may be filed, and shall not postpone the effectiveness of such rule or action. This action may not be challenged later in proceedings to enforce its requirements. (*See* CAA section 307(b)(2).)

List of Subjects in 40 CFR Part 81

Environmental protection, Air pollution control, National Parks, Ozone, Wilderness areas.

Dated: January 13, 2003.

James Gulliford,

Regional Administrator, Region 7.

Dated: January 16, 2003.

Thomas V. Skinner,

Regional Administrator, Region 5.

Chapter I, title 40 of the Code of Federal Regulations is amended as follows:

PART 81—[AMENDED]

1. The authority citation for part 81 continues to read as follows:

Authority: 42 U.S.C. 7401, *et seq.*

2. In § 81.314 the table entitled ''Illinois—Ozone (1–Hour Standard)'' is amended by revising the entry for St. Louis Area to read as follows:

§ 81.314 Illinois.

* * * * *

ILLINOIS—OZONE (1-HOUR STANDARD)

Designated area	Designation		Classification	
	Date [1]	Type	Date [1]	Type
* * *	*	*	*	*
St. Louis Area:				
Madison County	1–30–2003	Nonattainment	1–30–2003	Serious.
Monroe County	1–30–2003	Nonattainment	1–30–2003	Serious.
St. Clair County	1–30–2003	Nonattainment	1–30–2003	Serious.
* * *	*	*	*	*

[1] This date is October 18, 2000, unless otherwise noted.

* * * * *

3. In § 81.326 the table entitled ''Missouri—Ozone (1–Hour Standard)'' is amended by revising the entry for St. Louis Area to read as follows:

§ 81.326 Missouri.

* * * * *

MISSOURI—OZONE (1-HOUR STANDARD)

Designated area	Designation		Classification	
	Date [1]	Type	Date [1]	Type
* * *	*	* *		*
St. Louis Area:				
Franklin County	1–30–2003	Nonattainment	1–30–2003	Serious.
Jefferson County	1–30–2003	Nonattainment	1–30–2003	Serious.
St. Charles County	1–30–2003	Nonattainment	1–30–2003	Serious.
St. Louis County	1–30–2003	Nonattainment	1–30–2003	Serious.
St. Louis County	1–30–2003	Nonattainment	1–30–2003	Serious.
* * *	*	* *		*

[1] This date is October 18, 2000, unless otherwise noted.

* * * * *

[FR Doc. 03–1771 Filed 1–29–03; 8:45 am]

BILLING CODE 6560–50–P

ENVIRONMENTAL PROTECTION AGENCY

40 CFR Part 52

[MO 168–1168; FRL–7444–3]

Approval and Promulgation of Implementation Plans; State of Missouri

AGENCY: Environmental Protection Agency (EPA).

ACTION: Proposed rule.

SUMMARY: We, the EPA, are announcing a proposal to approve a revision to the state implementation plan (SIP) for the inspection and maintenance (I/M) program operating in the Missouri portion of the St. Louis, Missouri, nonattainment area. Missouri has made several amendments to the I/M rule to improve performance of the program and has requested that the SIP be revised. The effect of this action would be to ensure Federal enforceability of the state air program rules and to maintain consistency between the state-adopted rules and the approved SIP.

DATES: Comments must be received on or before March 3, 2003.

ADDRESSES: Written comments should be mailed to Leland Daniels, Environmental Protection Agency, Air Planning and Development Branch, 901 North 5th Street, Kansas City, Kansas 66101.

Copies of documents relative to this action are available for public inspection during normal business hours at the above-listed Region 7 location. Interested persons wanting to examine these document should make an appointment with the office at least 24 hours in advance.

FOR FURTHER INFORMATION CONTACT: Leland Daniels at (913) 551–7651.

SUPPLEMENTARY INFORMATION: Throughout this document whenever ''we,'' ''us,'' or ''our'' is used, we mean EPA. This section provides additional information by addressing the following questions:

What is a SIP?
What is the Federal approval process for a SIP?
What are the criteria for SIP approval?
What does Federal approval of a state regulation mean to me?
What is being addressed in this document?
Have the requirements for approval of a SIP revision been met?
What action is EPA taking?

What Is a SIP?

Section 110 of the Clean Air Act (CAA) requires states to develop air pollution regulations and control strategies to ensure that state air quality meets the national ambient air quality standards established by EPA. These ambient standards are established under section 109 of the CAA, and they currently address six criteria pollutants. These pollutants are: Carbon monoxide, nitrogen dioxide, ozone, lead, particulate matter, and sulfur dioxide.

Each state must submit these regulations and control strategies to us for approval and incorporation into the Federally-enforceable SIP.

Each Federally-approved SIP protects air quality primarily by addressing air pollution at its point of origin. These SIPs can be extensive, containing state regulations or other enforceable documents and supporting information such as emission inventories, monitoring networks, and modeling demonstrations.

What Is the Federal Approval Process for a SIP?

In order for state regulations to be incorporated into the Federally-enforceable SIP, states must formally adopt the regulations and control strategies consistent with state and Federal requirements. This process generally includes a public notice, public hearing, public comment period, and a formal adoption by a state-authorized rulemaking body.

Once a state rule, regulation, or control strategy is adopted, the state submits it to us for inclusion in the SIP. We must provide public notice and seek additional public comment regarding the proposed Federal action on the state submission. If relevant adverse comments are received, they must be addressed prior to any final Federal action by us.

All state regulations and supporting information approved by EPA under section 110 of the CAA are incorporated into the Federally-approved SIP. Records of such SIP actions are maintained in the Code of Federal Regulations (CFR) at Title 40, Part 52, entitled ''Approval and Promulgation of Implementation Plans.'' The actual state regulations which are approved are not reproduced in their entirety in the CFR outright but are ''incorporated by reference,'' which means that we have approved a given state regulation with a specific effective date.

What Are the Criteria for SIP Approval?

In order to be approved into a SIP, the submittal must meet the requirements of section 110. In addition to the procedural requirements mentioned above, the plan must provide for the attainment, maintenance, and enforcement of the national ambient air quality standards.

The CAA has additional requirements for the approval of SIPs for ozone nonattainment areas. It requires the adoption of either a ''basic'' or an ''enhanced'' I/M program depending on the severity of the ozone problem and the population of the area. Section 182(a)(2)(B) directed us to publish guidance for state I/M programs. We promulgated I/M regulations and subsequent amendments, codified in 40 CFR part 51, subpart S.

What Does Federal Approval of a State Regulation Mean to Me?

Enforcement of the state regulation before and after it is incorporated into the Federally-approved SIP is primarily a state responsibility. However, after the regulation is Federally approved, we are authorized to take enforcement action against violators. Citizens are also offered legal recourse to address violations as described in section 304 of the CAA.

What Is Being Addressed in This Document?

On May 18, 2000 (65 FR 31480), we took final action to approve Missouri's SIP for the I/M program in the St. Louis nonattainment area (St. Louis City, and the counties of St. Louis, St. Charles, Jefferson, and Franklin) and incorporated by reference the state I/M rule, 10 CSR (Code of State Regulations) 10–5.380. Although Missouri's program contains most of the features of an enhanced program, we approved the program with regard to compliance with the basic I/M requirements in Section 182(b)(4) of the Clean Air Act (CAA) and 40 CFR part 51, subpart S, because those are the I/M requirements currently applicable to the St. Louis area.[1] On April 5, 2000, the Missouri Department of Natural Resources (MDNR) began implementation of the I/M program. On February 4, 2002, the program began using the final, lower test levels,

[1] As discussed in a final rulemaking being published today in the Rules Section of the **Federal Register**, we are reclassifying the area to ''serious'' nonattainment in response to an order in *Sierra Club and Missouri Coalition for the Environment* v. *Environmental Protection Agency,* 311 F. 3d 853 (7th Cir. 2002). In that rule, EPA is establishing a schedule to require Missouri and Illinois to submit SIPs to meet the ''serious'' area requirements within one year from today. As a result, Missouri would be required to meet the I/M requirements in section 182(c)(3) by that deadline. However, in another proposed rule also published today, EPA is proposing to redesignate the St. Louis area to attainment. If the area is redesignated before the serious area requirements come due, Missouri would not be required to meet these requirements. In any event, the revisions which are the subject of this proposal are properly reviewed against the section 182(b)(4) requirements.

commonly known as cutpoints, to determine if a vehicle passed or failed the inspection.

MDNR has made several submissions concerning the I/M SIP. The content of those being considered here are discussed below.

The legal authority for the I/M program was amended in 1999 by Senate Bill 019. Amendments which affected the design of the I/M program include the following: requires the MDNR and the Missouri Highway Patrol to enter into an interagency agreement covering all aspects of the administration and enforcement of Section 307.366, Missouri Revised Statutes (RSMo); establishes criteria and procedures for a contract for the construction and operation of the I/M program; provides the residents of Franklin County the option of a biennial motor vehicle registration. For the purpose of registration, for vehicles sold by a licensed motor vehicle dealer, any inspection and approval within 120 days preceding the date of the sale is considered timely. Costs for repair work may only be included toward reaching the waiver amount if the repairs are performed by a recognized repair technician. It deleted the $5.00 fee reduction for any person required to wait for up to 15 minutes before the inspection begins. Penalties for longer wait times were retained. The I/M amendments contained in the October 25, 2000, submittal reflected these statutory changes.

On October 25, 2000, we received a request from Roger Randolph, Director of the Air Pollution Control Program, MDNR, to amend the I/M SIP and incorporate changes made to the I/M rule (10 CSR 10–5.380) by the Missouri Air Conservation Commission. These changes removed a fee reduction (otherwise known as a wait time penalty) of $5.00 whenever someone had to wait up to 15 minutes for a test; incorporated a transition program from January 1 through April 4, 2000; and provided another test option for residents of Franklin County.

On June 19, 2002, we received a letter from MDNR that contained their plan for incorporating the On-Board Diagnostic (OBD) test into the I/M program and a commitment to do so. This was in response to our amendment of the Federal I/M rule that changed the implementation date for use of the OBD test from January 1, 2001, to January 1, 2002, and provide options for other implementation dates.

On December 13, 2002, we received a request from MDNR to approve a revision to the I/M SIP and incorporate amendments made to the I/M rule. In addition to restructuring the rule, a number of amendments were made to: clarify the meaning of vehicles primarily operated in the area (section 1); clarify existing definitions and include new definitions (section 2); clarify fleet vehicle testing requirements, set fee payment methods, station and clean screening testing procedures, emission test standards and waiver requirements (section 3); clarify the vehicle test report requirement for vehicles that fail the OBD test, the clean screening test report requirements and the fleet vehicle reporting requirements (section 4); clarify the test methods for the OBD and the visual test methods; exempt hybrid electric vehicles from tailpipe test methods; include clean screening test methods as valid test methods (section 5), and delete the transition period. The submittal also included a list of nonregulatory provisions that will be updated early in 2003.

The following sections address whether the elements of the state's submittal comply with the applicable elements in the Federal rule. Only those elements affected by changes in the state rule are reviewed. Our decision for approval is based solely on the State's ability to meet the I/M requirements for a basic program.

Applicability (40 CFR 51.350)

As required in the I/M rule, any area classified as a moderate ozone nonattainment area and not required to implement an enhanced I/M program shall implement a basic I/M program in any 1990 census-defined, urbanized area within the nonattainment area with a population of 200,000 or more.

The legal authority for the I/M program is contained in the Missouri Revised Statutes (RSMo), sections 643.300–643.355 and section 307.366. The implementing regulations are in Missouri rule 10 CSR 10–5.380. In 1999 the legal authority for the I/M program was amended by Senate Bill 019. The amendments required MDNR and the Missouri Highway Patrol to enter into an interagency agreement covering all aspects of the administration and enforcement of Section 307.366, RSMo; established criteria and procedures for a contract for the construction and operation of the I/M program; and provided the residents of Franklin County the option of a biennial motor vehicle registration. For the purpose of registration, for vehicles sold by a licensed motor vehicle dealer, any inspection and approval within 120 days preceding the date of the sale is considered timely. Costs for repair work may only be included toward reaching the waiver amount if the repairs are performed by a recognized repair technician. It deleted the $5.00 fee reduction for any person who is required to wait for up to 15 minutes before the inspection begins.

The legal authority and regulations necessary to establish the program boundaries for the areas required by EPA's rule to be included in a basic I/M program continue. Thus, this portion of the SIP continues to be approvable.

Adequate Tools and Resources (40 CFR 51.354)

The Federal regulation requires Missouri to provide a description of the resources to be used in the program. The state must provide a detailed budget plan that describes the source of funds for personnel, program administration, program enforcement, and purchase of equipment. In addition, the SIP must include public education and assistance and funding for other necessary functions.

These amendments do not alter the detailed budget, fee amounts, source of funds for personnel, program administration, program enforcement, and purchase of equipment contained in the I/M SIP. The amendment does allow fees to be paid by cash, check or credit card. Thus, this portion of the SIP continues to be approvable.

Test Frequency and Convenience (40 CFR 51.355)

The I/M performance standard assumes an annual test frequency; however, other schedules may be approved if the performance standard is achieved. The Missouri legislation provides the legal authority to implement a biennial program. In 1999, the statutory authority was revised by Senate Bill 019 and it provided the residents of Franklin County the option of a biennial motor vehicle registration. Enforcement is accomplished through registration denial. Missouri did demonstrate that it met the performance standard. This portion of the SIP continues to meet the Federal requirements.

Although not required for a basic program, enhanced I/M programs shall be designed in such a way as to provide convenient service to motorists required to have their vehicles tested. To meet the enhanced requirements, the state must show that the network of stations is sufficient to ensure short waiting times, short driving distances, and regular testing hours. The State has assured consumer convenience by both State law, rule and contract provisions regarding station location, accessibility, and operation; equipment availability

and reliability, and wait time penalties. Although the shortest wait time penalty was deleted (the one for waits of up to 15 minutes), the wait time penalties for waits longer than 30 and 60 minutes remain. Since the beginning of the program, the average wait time is 12 minutes. Therefore, this portion of the SIP meets the test frequency and convenience requirements for an enhanced I/M program which exceed the requirements for a basic program.

Vehicle Coverage (40 CFR 51.356)

The performance standards for enhanced I/M programs assumes coverage of all 1968 and later model year light-duty vehicles (LDV) and light-duty trucks (LDT) up to 8500 pounds gross vehicle weight rating (GVWR) and includes vehicles operating on all fuel types. The standard for basic I/M programs does not include light duty trucks. Other levels of coverage may be approved if the necessary emission reductions are achieved.

Missouri's I/M statute requires coverage of all 1971 and newer LDVs and LDTs up to 8500 pounds GVWR which are domiciled or primarily operated in the area. As of the date of the original I/M SIP submittal (November 1999), 1.3 million vehicles are in the nonattainment area. The Missouri I/M regulation provides the regulatory authority to implement and enforce the vehicle coverage.

In section 1, the June 17, 2002, amendments added a definition of those vehicles that are primarily operated in the geographic area. In section 2, it also established a definition of a hybrid electric vehicle and specified in subsection 5(F) that they are not subject to tailpipe emission tests but are subject to other test methods.

In section 2, a number of definitions were clarified or added. These include compliance cycle, control chart, diagnostic trouble code, emission inspection, hybrid electric vehicle, malfunction indicator lamp, on-board diagnostics, OBD test, qualifying repair, readiness flag, and recognized labor costs.

The amendment established a compliance cycle for both privately- and publicly-owned vehicles. For privately-owned vehicles, the compliance cycle begins 60 days prior to the expiration of the vehicle's registration. For publicly-owned vehicles, the compliance cycle begins on January 1 of each even-numbered year. All applicable vehicles are to demonstrate compliance with the emission standards set in the rule during the compliance cycle. Federal fleets and federal employee vehicles are to comply with the December 1999 Interim Guidance for Federal Facility Compliance with Clean Air Act Section 118(c) and 118(d) and Applicable Provisions of State Vehicle Inspection and Maintenance Programs.

Missouri has revised its regulations to require Federal facilities operating vehicles in the I/M program area to report certification of compliance to the state. These requirements appear to be different than those for other non-Federal groups of Missouri registered vehicles. However, at this time we are not requiring states to implement 40 CFR 51.356(a)(4) dealing with Federal installations within I/M areas. The Department of Justice has recommended to us that this Federal regulation be revised since it appears to grant states authority to regulate Federal installations in circumstances where the Federal government has not waived sovereign immunity. It would not be appropriate to require compliance with this regulation if it is not authorized. We will be revising this provision in the future and will review state I/M SIPs with respect to this issue when this new rule is final. Therefore, for these reasons, we are neither proposing approval nor disapproval of the specific requirements which apply to Federal facilities at this time.

The amendments did not alter the level of coverage. Thus the level of coverage remains approvable as it meets the requirements for an enhanced I/M program which exceed the requirements for a basic program. In addition, Missouri has legal authority to implement fleet-testing requirements and to implement requirements for special exemptions. As noted above we are neither proposing approval nor disapproval of the requirements which apply to Federal facilities. Therefore, this portion of the SIP is approvable as it meets the requirements for a basic and an enhanced I/M program.

Test Procedures and Standards (40 CFR 51.357)

The Federal rule requires Missouri to establish written test procedures and pass/fail standards that are followed for each model year and vehicle type included in the program.

The October 25, 2000, submittal did provide for the use of the idle test and set emission limits for carbon monoxide and hydrocarbons during the transition period (see motorist compliance enforcement below). This test and the emission limits are applicable to automobile dealers and used vehicle purchasers. This submittal did not alter the program's test procedures and standards for the I/M program which started on April 5, 2000. This portion of the SIP continues to be approvable.

Although the submittal of December 13, 2002, retained the test methods contained in the previously approved SIP, two significant changes were made. First, the December 13, 2002, submittal took advantage of the flexibility included in our April 5, 2001, rulemaking concerning the integration of OBD testing in the I/M program. Second, the submittal added a hybrid method as one of the clean screening methods (see on-road testing below). In addition, per our guidance, it exempted hybrid electric vehicles from tailpipe test methods but subjected them to the evaporative system pressure test, OBD test, anti-tampering test, and clean screening.

The original, Federally-approved SIP committed to begin OBD testing beginning January 1, 2001. The December 13, 2002, submittal revises the original OBD start date commitment by introducing a two-year phase-in period for the OBD test starting January 1, 2003, and ending December 31, 2004. During the two-year phase-in period, the OBD test would be used as a ''clean screen'' test. Then starting January 1, 2005, the OBD test would be used to pass or fail the 1996 and newer model year vehicles.

During the phase-in period if a model year 1996 or newer, OBD-equipped vehicle passes its initial OBD test, the owner will be issued a passing compliance certificate and allowed to register the vehicle without further testing. If the vehicle fails its initial OBD inspection, it will then receive a ''second-chance'' IM240 test. Only if the vehicle fails both tests during this two-year period phase-in period will it be required to be repaired. Once the vehicle has been repaired, it must be submitted for a retest. According to the December 13, 2002, submittal, vehicles submitted for a retest will receive both an OBD test and an IM240 test, the latter of which must be passed for the vehicle to pass its retest. The December 13, 2002, submittal's requirement that the IM240 test be the deciding test for the retest is inconsistent with the April 5, 2001, Federal rule which requires only the OBD test be used for the retest.

Although the Missouri regulation is not consistent with our requirements for the OBD test during the 2003–2004 phase-in period, the Federal I/M rule (see 40 CFR 51.372) provides additional flexibility with regard to as-of-yet unimplemented I/M program elements

for basic I/M areas [2] that qualify for redesignation to attainment. Under this additional flexibility, an as-of-yet unimplemented I/M program element may be converted into a contingency measure as part of the area's approved maintenance plan (which, in turn, forms a part of the area's approved redesignation request). We believe that the St. Louis nonattainment area is eligible for redesignation and, in a separate rulemaking, are proposing to find that the area has attained the 1-hour ozone standard and to redesignate the area from nonattainment to attainment for that standard.

Other elements needed for the I/M program and redesignation request to be approved include legal authority for the as-of-yet unimplemented I/M program element(s), a request to place the as-of-yet unimplemented I/M upgrade into the contingency measures portion of the maintenance plan upon redesignation, a commitment to adopt (or consider adopting) the regulations needed to implement the deferred I/M program element(s) including an enforceable schedule for adoption and implementation of those I/M program element(s). See 40 CFR 51.372(c).

The legal authority for the program is discussed above (see Applicability). Missouri has legal authority to implement and operate an I/M program as required including OBD.

Section 6.1 of the maintenance plan, contingency measures, contains a request that the OBD test measures in 40 CFR Parts 51 and 82 be placed in the contingency measures portion of the SIP, upon redesignation of the area to attainment. This requirement is fulfilled.

Section 6.1 of the maintenance plan also contains a commitment that MDNR will adopt or consider adopting regulations to implement EPA's OBD testing requirement to correct a violation of the ozone standard. This requirement is fulfilled.

Section 6.1 of the maintenance plan also contains an enforceable schedule for development, proposal, adoption, submission, and implementation of the OBD testing requirements. This requirement is fulfilled.

The criteria for full approval also requires that basic areas continuing operation of I/M programs as part of the maintenance plan without implemented upgrades shall be assumed to be 80 percent as effective as an implemented, upgraded version of the same I/M program. The presumption that Missouri's I/M program is 80 percent as effective is not applicable. We are not discounting the effectiveness of Missouri's program as they are not taking any credit for emissions reduction benefits for OBD testing during the 2003–2004 time period in the MOBILE modeling efforts done for the emission inventories in the maintenance plan.

For the reasons set forth above, this portion of the SIP is approvable only if the St. Louis nonattainment area is redesignated. This portion of the SIP is not approvable if the area is not redesignated. For the reasons listed above we are not discounting the effectiveness of the Missouri program by 20 percent.

Test Equipment (40 CFR 51.358)

As required by Federal rule, the original state submittal contained the written technical specifications for all test equipment to be used in the program. The specifications required the use of computerized test systems. The specifications also included performance features and functional characteristics of the computerized test systems that meet the applicable Federal I/M regulations and were approvable.

Additional language was added to the regulatory amendment to clarify the performance features of the emission test equipment, the functional characteristic of computerized test systems, and that the evaporative system pressure test equipment, the single-speed and two-speed idle test equipment, the transient emission test equipment, and the OBD test equipment must meet standards specified by EPA. This portion of the SIP continues to be approvable.

Waivers and Compliance via Diagnostic Inspection (40 CFR 51.360)

The Federal I/M regulation allows for the issuance of a waiver, which is a form of compliance with the program requirements, that permits a motorist to comply without meeting the applicable test standards. For enhanced I/M programs, an expenditure of at least $450 in repairs, adjusted annually to reflect the change in the Consumer Price Index (CPI) as compared with the CPI for 1989, is required to qualify for a waiver. For the basic program the minimum expenditure is $75 for pre-1981 vehicles and $200 for 1981 and newer vehicles.

As required, the Missouri statute provides legislative authority to issue waivers, set and adjust cost limits, and administer and enforce the waiver system. Previously, the dollar amounts were set by statutes. This amendment increased the amount that must be spent on qualifying repairs and added a requirement that measured tailpipe emissions must show a reduction upon reinspection. The waiver amount for pre-1981 model year vehicles is set at $200 and the amount for 1981 and all subsequent model year vehicles is $450. After January 1, 2005, 1996 and newer model year vehicles will not be eligible for a waiver. The state statute allows these amounts to be adjusted for inflation after January 1, 2001, to be consistent with an enhanced I/M program. Waivers will be issued for vehicles that do not pass the emission inspection and meet the waiver criteria. The repair record must show that the repair expenditures were not covered by either a recall or manufacturer warranty and that parts costs and labor costs of recognized technicians total the minimum applicable amount for the model year of the vehicle. However, because Missouri is subject to the basic program requirements, they are only required to meet or exceed the basic I/M requirements of a minimum of $75 for pre-1981 vehicles and $200 for 1981 and newer vehicles.

Missouri regulations include provisions that address waiver criteria and procedures, including cost limits, tampering and warranty-related repairs, quality control, and administration. Parts and labor costs for qualifying emission repairs count toward the waiver amount if the repairs were performed or supervised by a recognized repair technician. The SIP sets a waiver rate and describes corrective action that will be taken if the actual waiver rate exceeds the commitment in the SIP. The SIP meets this portion of the regulation and is acceptable.

Motorist Compliance Enforcement (40 CFR 51.361)

The Federal regulation requires that compliance will be ensured through the denial of motor vehicle registration in enhanced I/M programs unless an exception for use of an existing alternative is approved. A basic I/M area may use an alternative enforcement mechanism if it demonstrates that the alternative will be as effective as registration denial. To register a vehicle subject to the I/M requirements, the Missouri Department of Revenue by rule, 12 CSR 10–23.170, requires an owner to present an original, current certificate of emissions inspection no older than 60 days. Senate Bill 019 in 1999 provided that for the purpose of registration, for vehicles sold by a licensed motor vehicle dealer, any inspection and approval within 120

[2] As noted previously, the St. Louis area is still being evaluated as a basic area, since the enhanced area requirements have not yet come due.

days preceding the date of the sale is considered timely. Thus the enforcement method used is registration denial.

The December 13, 2002, submittal did not alter Missouri's SIP commitment to a compliance rate of 96 percent which was used in the performance standard modeling demonstration and continues to be approvable. This submittal did not alter the registration denial enforcement process, the identification of agencies responsible for performing each applicable activity, and a plan for testing fleet vehicles. Therefore, this portion of the SIP is approvable.

Inspector Training and Licensing or Certification (40 CFR 51.367)

The Federal I/M regulation requires all inspectors to be formally trained and licensed or certified to perform inspections. The training, licensing or certification requirements previously approved were retained. In addition, four hours of continuing education per year is required. This portion of the SIP continues to be approvable.

On-Road Testing (40 CFR 51.371)

On-road testing is required in enhanced I/M areas and is an option for basic areas. The on-road testing program shall provide information about the emission performance of in-use vehicles. The use of either remote sensing devices (RSD) or roadside pullovers where tailpipe emission testing is done can be used to meet the Federal regulations. For enhanced areas, the on-road testing program must test 0.5 percent of the vehicles or 20,000 vehicles, whichever is less. A motorist that has passed an emissions test and is found to be a high emitter as a result of an on-road test shall be notified that the vehicle is required to pass an out-of-cycle emissions test.

To improve motorist convenience and reduce the number of test lanes needed in the St. Louis area, approximately 40 percent of the vehicles are excused from some I/M testing that would otherwise be required. This is accomplished by exempting the two newest model year vehicles (roughly 11 to 15 percent of all vehicles) and using RSD to test and identify another 25 to 29 percent of the vehicles, those that are low emitting vehicles. This is known as clean screening.

In subsection (3)(J) and (K), the rule specifies the clean screening emission inspection requirements (test methods and procedures) and the inspection standards. The rule includes a hybrid test method (see (3)(J)(B)) for clean screening that does not meet our guidance. This hybrid test method excuses vehicles from further I/M testing if the vehicle is a known low emitter and has passed one RSD test.

The original SIP committed to a minimum of 0.5 percent of the fleet receiving a RSD test each year. The original contract contained a description of the program and methods of collecting, analyzing, and reporting data. Enabling authority to enforce off-cycle inspection and repair requirements is not contained in Missouri's legislation. As stated above, the on-road testing requirements are optional for basic programs. Therefore, this is not relevant to the EPA's proposed action with respect to the current I/M requirement applicable to St. Louis.

Have the Requirements for Approval of a SIP Revision Been Met?

The state submittal has met the public notice requirements for SIP submissions in accordance with 40 CFR 51.102. The submittal also satisfied the completeness criteria of 40 CFR part 51, appendix V. In addition, as explained above and in more detail in the technical support document which is part of this document, the revision meets the substantive SIP requirements of the CAA, including section 110 and implementing regulations.

What Action Is EPA Taking?

Our review of the material submitted indicates that the state has revised the I/M program in accordance with the requirements of the CAA and the Federal rule except for one. The state's use of the IM240 test during the phase-in period to test model year 1996 and newer vehicles is inconsistent with the Federal rule (see Test Procedures and Standards above). As discussed above, since this SIP revision was made in conjunction with a request to redesignate the St. Louis area to attainment, and as provided for in the Federal I/M rule, we are proposing to approve the Missouri SIP revision for the St. Louis I/M program and incorporate by reference the state I/M rule, 10 CSR 10–5.380, which was submitted on December 13, 2002, if the area is redesignated to attainment. If the area is not redesignated, we are proposing to disapprove this SIP revision. We are neither proposing to approve nor disapprove the specific requirements which apply to Federal facilities at this time. We are soliciting comments on this proposed action. Final rulemaking will occur after consideration of any comments.

Statutory and Executive Order Reviews

Under Executive Order 12866 (58 FR 51735, October 4, 1993), this proposed action is not a ''significant regulatory action'' and therefore is not subject to review by the Office of Management and Budget. For this reason, this action is also not subject to Executive Order 13211, ''Actions Concerning Regulations That Significantly Affect Energy Supply, Distribution, or Use'' (66 FR 28355, May 22, 2001). This proposed action merely proposes to approve state law as meeting Federal requirements and imposes no additional requirements beyond those imposed by state law. Accordingly, the Administrator certifies that this proposed rule will not have a significant economic impact on a substantial number of small entities under the Regulatory Flexibility Act (5 U.S.C. 601 *et seq.*). Because this rule proposes to approve pre-existing requirements under state law and does not impose any additional enforceable duty beyond that required by state law, it does not contain any unfunded mandate or significantly or uniquely affect small governments, as described in the Unfunded Mandates Reform Act of 1995 (Public Law 104–4).

This proposed rule also does not have tribal implications because it will not have a substantial direct effect on one or more Indian tribes, on the relationship between the Federal Government and Indian tribes, or on the distribution of power and responsibilities between the Federal Government and Indian tribes, as specified by Executive Order 13175 (65 FR 67249, November 9, 2000). This action also does not have Federalism implications because it does not have substantial direct effects on the States, on the relationship between the national government and the States, or on the distribution of power and responsibilities among the various levels of government, as specified in Executive Order 13132 (64 FR 43255, August 10, 1999). This action merely proposes to approve a state rule implementing a Federal standard, and does not alter the relationship or the distribution of power and responsibilities established in the CAA. This proposed rule also is not subject to Executive Order 13045 ''Protection of Children from Environmental Health Risks and Safety Risks'' (62 FR 19885, April 23, 1997), because it is not economically significant.

In reviewing SIP submissions, EPA's role is to approve state choices, provided that they meet the criteria of the CAA. In this context, in the absence of a prior existing requirement for the State to use voluntary consensus

standards (VCS), EPA has no authority to disapprove a SIP submission for failure to use VCS. It would thus be inconsistent with applicable law for EPA, when it reviews a SIP submission, to use VCS in place of a SIP submission that otherwise satisfies the provisions of the CAA. Thus, the requirements of section 12(d) of the National Technology Transfer and Advancement Act of 1995 (15 U.S.C. 272 note) do not apply. This proposed rule does not impose an information collection burden under the provisions of the Paperwork Reduction Act of 1995 (44 U.S.C. 3501 *et seq.*).

List of Subjects 40 CFR Part 52

Environmental protection, Air pollution control, Carbon monoxide, Incorporation by reference, Intergovernmental relations, Lead, Nitrogen dioxide, Ozone, Particulate matter, Reporting and recordkeeping requirements, Sulfur oxides, Volatile organic compounds.

Dated: January 13, 2003.

James Gulliford,

Regional Administrator, Region 7.

[FR Doc. 03–1772 Filed 1–29–03; 8:45 am]

BILLING CODE 6560–50–P

ENVIRONMENTAL PROTECTION AGENCY

40 CFR Parts 52 and 81

[MO 170–1170; IL 216–1; FRL–7444–5]

Determination of Attainment, Approval and Promulgation of Implementation Plans, and Designation of Areas for Air Quality Planning Purposes; States of Missouri and Illinois

AGENCY: Environmental Protection Agency (EPA).

ACTION: Proposed rule.

SUMMARY: EPA is proposing to determine that the St. Louis ozone nonattainment area (St. Louis area) has attained the 1-hour ozone National Ambient Air Quality Standard (NAAQS). This proposal is based on three years of complete, quality-assured ambient air quality monitoring data for the 2000 through 2002 ozone seasons that demonstrate that the 1-hour ozone NAAQS has been attained in the area. On the basis of this proposal, EPA is also proposing to determine that certain attainment demonstration requirements along with certain other related requirements of part D of Title I of the Clean Air Act (CAA) are not applicable to the St. Louis area.

The EPA is also proposing to approve an exemption from certain nitrogen oxides (NO_X) requirements as provided for in section 182(f) for the Illinois portion of the St. Louis area. Section 182(f) establishes NO_X requirements for ozone nonattainment areas. However, it provides that these requirements do not apply to an area if the Administrator determines that NO_X reductions would not contribute to attainment. Because the St. Louis area is currently attaining the ozone NAAQS, EPA is proposing to grant the Illinois portion of the St. Louis area an NO_X exemption from NO_X reasonably available control technology (RACT) requirements. If final action is taken, the Illinois portion of the St. Louis area would no longer be subject to these NO_X emission control requirements. However, all emission controls previously adopted by the state must continue to be implemented.

EPA is also proposing to approve requests from the States of Missouri and Illinois, submitted on December 6, 2002, and December 30, 2002, respectively, to redesignate the St. Louis area to attainment of the 1-hour ozone NAAQS. In proposing to approve these requests EPA is also proposing to approve the states' plans for maintaining the 1-hour ozone NAAQS through 2014, as revisions to the Missouri and Illinois State Implementation Plans (SIPs). EPA is also proposing to find adequate and approve the states' 2014 Motor Vehicle Emission Budgets (MVEBs) for volatile organic compounds (VOCs) and nitrogen oxide compounds (NO_X) in the submitted maintenance plans for transportation conformity purposes.

The St. Louis nonattainment area is located in portions of Illinois and Missouri. The Illinois portion of the nonattainment area includes Madison, Monroe, and St. Clair Counties (collectively referred to as the Metro-East area). The Missouri portion of the nonattainment area includes Franklin, Jefferson, St. Charles, and St. Louis Counties and St. Louis City.

DATES: Comments must be received on or before March 3, 2003.

ADDRESSES: Written comments should be mailed to Joshua Tapp, Chief, Air Planning and Development Branch, Environmental Protection Agency, Region 7, 901 North 5th Street, Kansas City, Kansas 66101; or, J. Elmer Bortzer, Chief, Regulation Development Section, Air Programs Branch (ART–18J), Environmental Protection Agency, Region 5, 77 West Jackson Boulevard, Chicago, Illinois 60604.

Relevant documents are available for inspection during normal business hours at the above-listed Region 7 and Region 5 locations. Interested persons wanting to examine these documents should make an appointment with the appropriate office at least 24 hours in advance.

FOR FURTHER INFORMATION CONTACT: Tony Petruska, Region 7, (913) 551–7637, (*petruska.anthony@epa.gov*) or Edward Doty, Region 5, (312) 886–6057, (*doty.edward@epa.gov*).

SUPPLEMENTARY INFORMATION:

Table of Contents

I. Proposed Determination of Attainment and Redesignation
A. What actions is EPA proposing to take?
B. Why is EPA taking these actions?
C. What would be the effect of these actions?
D. What is the background for these actions?
E. What are the redesignation review criteria?
F. What is EPA's analysis of the request?
1. Criterion (1): The Area Must Be Attaining the 1-Hour Ozone NAAQS
2. Criteria (2) and (5): The Area Must Have a Fully Approved SIP under Section 110(k); and the Area Must Have Met All Applicable Requirements Under Section 110 and Part D
a. Section 110 Requirements
b. Transport of Ozone Precursors to Downwind Areas
c. Part D: General Provisions for Nonattainment Areas
d. Section 172(c) Requirements
(1) RACM and RACT
(2) Reasonable Further Progress
(3) Emissions Inventories
(4) Identification and Quantification of Allowable Emissions for Major New or Modified Stationary Sources and Permits for New and Modified Major Stationary Sources
(5) Other Emission Control Measures
(6) Contingency Measures
e. Section 176 Conformity Requirements
f. Subpart 2 Section 182 Requirements
g. Attainment Demonstration
h. 1990 Base Year Inventory and Periodic Emissions Inventories Updates
i. Emissions Statement Requirements
j. 15 Percent Rate-Of-Progress Plan Requirements
k. VOC RACT Requirements
l. RACM
m. Stage II Vapor Recovery Requirements
n. Vehicle Inspection/Maintenance (I/M) Requirements
o. NO_X Emission Control Requirements
3. Criterion (3): The Improvement in Air Quality Must Be Due to Permanent and Enforceable Reductions in Emissions
a. Emission Controls
b. Meteorological Conditions
4. Criterion (4): The Area Must Have a Fully Approved Maintenance Plan Meeting the Requirements of Section 175A
a. Attainment Emissions Inventory
b. Maintenance Demonstration
c. Monitoring Network
d. Verification of Continued Attainment
e. Contingency Plan
f. Motor Vehicle Emissions Budgets

G. Where is the public record and where do I send comments?
II. Statutory and Executive Order Reviews

I. Proposed Determination of Attainment and Redesignation

A. What Actions Is EPA Proposing to Take?

EPA is proposing to determine that the St. Louis nonattainment area has attained the 1-hour ozone standard. On the basis of this determination, EPA is also proposing to determine that certain attainment demonstration requirements (section 172(c)(1) of the CAA), along with certain other related requirements, of part D of Title I of the CAA, specifically the section 172(c)(9) contingency measure requirement (measures needed to mitigate a state's failure to achieve reasonable further progress toward, and attainment of, a NAAQS), the section 182(b)(1) attainment demonstration requirement and the section 182(j) multi-state attainment demonstration requirement, are not applicable to the St. Louis area as long as it continues to attain the ozone NAAQS. EPA is also proposing the following actions with respect to each state:

Illinois

EPA is proposing to approve a request from the state of Illinois to redesignate the Illinois portion of the St. Louis nonattainment area to attainment of the 1-hour ozone NAAQS.

In addition, for Illinois, EPA is proposing the following:

- Approve Illinois' plan for maintaining the 1-hour ozone NAAQS through 2014, as a revision to the Illinois SIP;
- Find adequate and approve the 2014 MVEBs for VOC and NO_X in the submitted maintenance plan for transportation conformity purposes;
- Determine that the attainment demonstration (and associated contingency measures) and Reasonably Available Control Measures (RACM) requirements of the CAA are not applicable so long as the area continues to attain the NAAQS; and
- Exempt the Illinois portion of the area from the NO_X RACT requirements of the CAA.

Missouri

EPA is proposing to approve a request from the State of Missouri to redesignate the Missouri portion of the St. Louis nonattainment area to attainment of the 1-hour ozone NAAQS.

In addition, for Missouri, EPA is proposing the following:

- Approve Missouri's plan for maintaining the 1-hour ozone NAAQS through 2014, as a revision to the Missouri SIP;
- Find adequate and approve the 2014 MVEBs for VOC and NO_X in the submitted maintenance plans for transportation conformity purposes; and,
- Determine that the attainment demonstration (and related contingency measure requirements) and RACM requirements of the CAA are not applicable so long as the area continues to attain the NAAQS.

Although EPA is addressing separate requests from Missouri and Illinois, all of the above actions are being proposed in this rule. Where applicable, notations have been made indicating items specifically applicable to Missouri and those specifically applicable to Illinois. In any final rulemaking(s), EPA will consider addressing the above proposed actions in either one rule or in rules specific to each state.

B. Why Is EPA Taking These Actions?

As detailed below, EPA is proposing to determine that the St. Louis area has attained the 1-hour ozone standard and has fully met the requirements for redesignation found at section 107(d)(3)(E) of the CAA for redesignation of an area from nonattainment to attainment. The EPA believes that each state has demonstrated that the area has attained, and that the criteria for redesignation have been met.

C. What Would Be the Effect of These Actions?

A final determination that the St. Louis area has met the 1-hour ozone standard would relieve the states from the obligation to meet certain additional requirements, as identified above, which apply to areas not attaining that standard. EPA notes, however, that the area is likely to be designated nonattainment for the 8-hour ozone standard, and would be subject to any additional requirements as a result of such designation. EPA also notes that it is not proposing to revoke the 1-hour standard for the St. Louis area.

Approval of the Missouri redesignation request would change the official designation for the 1-hour ozone NAAQS found at 40 CFR part 81 for the St. Louis area, including the City of St. Louis, and the Counties of Franklin, Jefferson, St. Charles, and St. Louis from nonattainment to attainment. It would also incorporate into the Missouri SIP a plan for maintaining the 1-hour ozone NAAQS through 2014. The plan includes contingency measures to remedy any future violations of the 1-hour ozone NAAQS, and includes VOC and NO_X MVEBs for 2014 for the Missouri portion of the St. Louis area.

Approval of the Illinois redesignation request would change the official designation for the 1-hour ozone NAAQS found at 40 CFR part 81 for the Illinois counties of Madison, Monroe, and St. Clair from nonattainment to attainment. It would also incorporate into the Illinois SIP a plan for maintaining the 1-hour ozone NAAQS through 2014. The plan includes contingency measures to remedy any future violations of the 1-hour ozone NAAQS, and includes VOC and NO_X MVEBs for 2014 for the Illinois portion of the St. Louis area.

D. What Is the Background for These Actions?

With respect to the proposed finding of attainment and proposed determination that certain requirements are not applicable to an area monitoring attainment of the 1-hour ozone standard, EPA described its interpretation of the attainment demonstration requirements (and related requirements) in detail in its proposed rule on the Cincinati-Hamilton area (65 FR 3630, 3631–3632, January 24, 2000). In summary, EPA interprets the CAA's general nonattainment provisions of subpart 1 of part D of Title I (sections 171 and 172) and the more specific attainment demonstration and related provisions of subpart 2 (section 182), relating to SIP requirements for ozone nonattainment areas to not require the submission of SIP revisions concerning reasonable further progress (RFP), attainment demonstrations, or contingency measures for areas where the monitoring data show that the area is attaining the 1-hour ozone standard. (*See Sierra Club* v. *EPA,* 99 F.3d 1551 (10th Cir. 1996)). This rationale is described in a memorandum from John S. Seitz, Director, Office of Air Quality Planning and Standards, entitled ''Reasonable Further Progress, Attainment Demonstration, and Related Requirements for Ozone Nonattainment Areas Meeting the Ozone National Ambient Air Quality Standard,'' dated May 10, 1995. (See also, the proposed determination of attainment for Louisville, 66 FR 27483, 27486, May 17, 2001, and the proposed determination of attainment for Pittsburgh-Beaver Valley, 66 FR 1925, January 10, 2001, for more recent applications of this interpretation.)

With regard to the redesignation requests, under section 107(d) of the CAA, the St. Louis area was designated as an ozone nonattainment area in March 1978 (43 FR 8962). On November

15, 1990, the CAA Amendments of 1990 were enacted. Under section 107(d)(4)(A) of the CAA, on November 6, 1991 (56 FR 56694), the St. Louis area was designated as a moderate ozone nonattainment area as a result of monitored violations of the one-hour ozone NAAQS during the 1987–1989 period. In a separate rulemaking, EPA is reclassifying the area to a serious nonattainment area. However, as explained below, in Section I.F.2, the basis for the proposed redesignation does not depend on the area's ''serious'' classification.

Illinois and Missouri have adopted and implemented emission control programs required under the CAA to reduce emissions of VOC and NO_X. These emission control programs include stationary source RACT, vehicle inspection and maintenance (I/M) programs, transportation control measures (TCMs), and other measures (see the analysis and discussion of specific emission control measures below). As a result of the emission control programs, ozone monitors in the St. Louis area have recorded three years of ozone monitoring data for the 2000–2002 period showing that the area has attained the 1-hour ozone NAAQS.

On December 6, 2002, the Missouri Department of Natural Resources submitted a Redesignation Demonstration and Maintenance Plan for the Missouri Portion of the St. Louis ozone nonattainment area along with a request to redesignate the Missouri portion of the St. Louis nonattainment area to attainment of the 1-hour ozone NAAQS. Included in the Redesignation Demonstration and Maintenance Plan for the Missouri Portion of the St. Louis nonattainment area is a plan to maintain the 1-hour ozone NAAQS for a least the next 10 years, and the 2014 MVEBs for transportation conformity purposes.

On December 30, 2002, the Illinois Environmental Protection Agency submitted a Maintenance Plan for the Illinois Portion of the St. Louis ozone nonattainment area along with a request to redesignate the Illinois portion of the St. Louis nonattainment area to attainment of the 1-hour ozone NAAQS. Included in the Maintenance Plan for the Illinois Portion of the St. Louis ozone nonattainment area is a plan to maintain the 1-hour ozone NAAQS for at least the next 10 years, and the 2014 MVEBs for transportation conformity purposes.

E. What Are the Redesignation Review Criteria?

The CAA provides the requirements for redesignating a nonattainment area to attainment. Specifically, section 107(d)(3)(E) allows for redesignation providing that: (1) The Administrator determines that the area has attained the applicable NAAQS; (2) the Administrator has fully approved the applicable implementation plan for the area under section 110(k); (3) the Administrator determines that the improvement in air quality is due to permanent and enforceable reductions in emissions resulting from implementation of the applicable SIP and applicable Federal air pollutant control regulations and other permanent and enforceable reductions; (4) the Administrator has fully approved a maintenance plan for the area as meeting the requirements of section 175A; and, (5) the state containing such area has met all requirements applicable to the area under section 110 and part D.

EPA provided guidance on redesignation in the General Preamble for the Implementation of Title I of the CAA Amendments of 1990, on April 16, 1992 (57 FR 13498), and supplemented this guidance on April 28, 1992 (57 FR 18070). EPA has provided further guidance on processing redesignation requests in the following documents:

State Implementation Plans; General Preamble for the Implementation of Title I of the CAA Amendments of 1990 (57 FR 13498), April 16, 1992 (General Preamble);

''Maintenance Plans for Redesignation of Ozone and Carbon Monoxide Nonattainment Areas,'' Memorandum from G.T. Helms, Chief, Ozone/Carbon Monoxide Programs Branch, April 30, 1992;

''Contingency Measures for Ozone and Carbon Monoxide (CO) Redesignations,'' Memorandum from G. T. Helms, Chief, Ozone/Carbon Monoxide Programs Branch, June 1, 1992;

''Procedures for Processing Requests to Redesignate Areas to Attainment,'' Memorandum from John Calcagni, Director, Air Quality Management Division, September 4, 1992;

''State Implementation Plan (SIP) Actions Submitted in Response to Clean Air Act (ACT) Deadlines,'' Memorandum from John Calcagni, Director, Air Quality Management Division, October 28, 1992;

''Technical Support Documents (TSD's) for Redesignation Ozone and Carbon Monoxide (CO) Nonattainment Areas,'' Memorandum from G. T. Helms, Chief, Ozone/Carbon Monoxide Programs Branch, August 17, 1993;

''State Implementation Plan (SIP) Requirements for Areas Submitting Requests for Redesignation to Attainment of the Ozone and Carbon Monoxide (CO) National Ambient Air Quality Standards (NAAQS) On or After November 15, 1992,'' Memorandum from Michael H. Shapiro, Acting Assistant Administrator for Air and Radiation, September 17, 1993;

''Part D New Source Review (part D NSR) Requirements for Areas Requesting Redesignation to Attainment,'' Memorandum from Mary D. Nichols, Assistant Administrator for Air and Radiation, October 14, 1994; and

''Reasonable Further Progress, Attainment Demonstration, and Related Requirements for Ozone Nonattainment Areas Meeting the Ozone National Ambient Air Quality Standard,'' Memorandum from John S. Seitz, Director, Office of Air Quality Planning and Standards, May 10, 1995.

F. What Is EPA's Analysis of the Requests?

EPA believes that Missouri and Illinois have demonstrated that the St. Louis area has attained the 1-hour ozone standard and have demonstrated that the area meets all of the applicable criteria for redesignation to attainment as specified in Section 107(d)(3)(E) of the CAA.

1. Criterion (1): The Area Must Be Attaining the 1-Hour Ozone NAAQS

EPA proposes to find that the area has attained the 1-hour ozone standard and to approve the redesignation requests submitted by Missouri and Illinois for the St. Louis area as meeting this requirement because complete, quality-assured, ambient air monitoring data for the 2000 to 2002 ozone seasons (April through September, when the highest ozone concentrations are expected to occur in this area) demonstrate that the 1-hour ozone NAAQS has been attained in the entire St. Louis area. For ozone, an area may be considered to be attaining the 1-hour ozone NAAQS if there are no violations, as determined in accordance with 40 CFR 50.9 and appendix H, based on three complete, consecutive calendar years of quality-assured ambient monitoring data. A violation of the 1-hour ozone NAAQS occurs when the estimated number of exceedances per year averaged over three years is greater than 1.0 at any monitoring site in the area or its downwind environs, using conventional rounding techniques.

The calculation of the estimated exceedances takes into account not only the number of exceedances during a

given ozone season, but also completeness of data, and daily peak ozone concentrations on days in the ozone season that can be assumed to be less than the level of the standard. An example calculation of estimated exceedances at the West Alton monitor is given below. A daily exceedance occurs when the maximum hourly ozone concentration during a given day is greater than or equal to 0.125 parts per million (ppm), using conventional rounding techniques. Monitoring data must be collected and quality-assured in accordance with 40 CFR part 58, and recorded in EPA's Aerometric Information Retrieval System (AIRS).

MDNR and IEPA submitted quality-assured ozone monitoring data to EPA for the 2000 to 2002 ozone monitoring seasons. Table 1 below summarizes these air quality data.

TABLE 1.—1-HOUR OZONE NAAQS EXCEEDANCES IN THE ST. LOUIS, ILLINOIS-MISSOURI AREA FROM 2000 TO 2002

Site name	County or city and state	Estimated exceedances			Average number of estimated exceedances 2000–2002
		2000	2001	2002	
Jerseyville	Jersey, IL	0.0	1.0	1.0	0.7
Alton	Madison, IL	0.0	0.0	0.0	0.0
Maryville	Madison, IL	0.0	0.0	1.0	0.3
Edwardsville	Madison, IL	0.0	0.0	0.0	0.0
Wood River	Madison, IL	0.0	1.0	0.0	0.3
Houston	Randolph, IL	0.0	0.0	0.0	0.0
East St. Louis	St. Clair, IL	0.0	0.0	0.0	0.0
Arnold	Jefferson, MO	0.0	0.0	0.0	0.0
West Alton	St. Charles, MO	1.0	1.0	1.0	1.0
Orchard Farm	St. Charles, MO	0.0	0.0	2.0	0.7
Bonne Terre	St. Genevieve, MO	0.0	0.0	0.0	0.0
South Lindbergh	St. Louis, MO	0.0	0.0	2.0	0.7
Queeny	St. Louis, MO	0.0	0.0	0.0	0.0
Hunter	St. Louis, MO	0.0	0.0	0.0	0.0
Flo Valley	St. Louis, MO	0.0	0.0	0.0	0.0
St. Ann (old)	St. Louis, MO	0.0	n/a	n/a	[1] 0.0
St. Ann (new)	St. Louis, MO	n/a	0.0	0.0	[1] n/a
Broadway	St. Louis City, MO	0.0	0.0	0.0	0.0
Clark	St. Louis City, MO	0.0	0.0	0.0	0.0
Margaretta	St. Louis City, MO	0.0	0.0	0.0	0.0

[1] The owner of the property on which the old St. Ann monitor was located terminated the lease agreement with MDNR. The new site is 0.7 miles east of the old site. In general, ambient monitors should remain at the same location for the duration of the monitoring period required for demonstrating attainment. However, when three complete, consecutive calendar years of data is not available for a monitoring site, adjustments are made consistent with EPA monitoring criteria, in determining the average number of estimated exceedances per year. The average number of estimated exceedances for 2000–2002 for the old St. Ann monitor is the estimated exceedances for 2000, or 0.0. In addition, where a monitor has been in operation less than three years, the average estimated number of exceedances cannot be determined. Since the new St. Ann monitor has been in operation less than three years, the average number of estimated exceedances for 2000–2002 was not determined.

The following is an example of how the number of estimated exceedances at the West Alton Monitor were determined: During the 2000 to 2002 time period, the West Alton monitor was determined to have an annual average number of estimated exceedances of 1.0. This value was determined in accordance with 40 CFR 50.9 and appendix H, as follows:

e = v + [(v/n)*(N-n-z)] where

Variable description	Comments
e = the estimated number of exceedances for the year.	Calculated.
N = the number of required monitoring days in the year.	Missouri's ozone season is April 1 through September 30.
n = the number of valid daily maxima.	Days with valid data based on 40 CFR part 50 and appendix H.

e = v + [(v/n)*(N-n-z)] where

Variable description	Comments
v = the number of daily values above the level of the standard.	Based on monitored values.
Z = the number of days assumed to be less than the standard level.	Based on 40 CFR part 50, Appendix H, for days that were likely below the standard.

WEST ALTON MONITOR

Variable	2000	2001	2002
e	1.0	1.0	1.0
N	214	214	214
n	214	213	213
v	1	1	1
z	0	1	0

WEST ALTON MONITOR—Continued

Variable	2000	2001	2002
Average Number of Estimated Exceedances = (1.0 + 1.0 + 1.0)/3 = 1.0			

2. Criteria (2) and (5): The Area Must Have a Fully Approved SIP Under Section 110(k); and the Area Must Have Met All Applicable Requirements Under Section 110 and Part D

Background

In order to analyze whether the Missouri and the Illinois portions of the area each meet these criteria, it is necessary to discuss what requirements are applicable to the St. Louis area, and for the applicable SIP requirements, the extent to which they are fully approved under section 110(k). In a notice accompanying a rulemaking published June 26, 2001, EPA explained how the states had previously submitted, and

EPA had previously approved, various SIPs for the area in order to meet the CAA requirements applicable to a moderate ozone nonattainment area (66 FR 33996, 34001). The EPA incorporates that discussion into this notice by reference. In redesignating an area EPA may rely on prior SIP approvals and rulemaking actions, and need not reopen earlier issues with regard to the SIP. See, *Wall* v. *EPA,* 265 F. 3d 426, 438 (6th Cir. 2001) and *Southwestern Pa. Growth Alliance* v. *Browner,* 144 F. 3d 984, 989–90 (6th Cir. 1998). In the June 26, 2001, rulemaking, EPA also approved into the Missouri and Illinois SIPs, several plan elements which ensured that the states had fully approved SIPs (*e.g.*, the states' attainment demonstrations for the area) (66 FR 33996, 34010).

On November 25, 2002, the U.S. Court of Appeals for the Seventh Circuit (Court) issued a decision in *Sierra Club and Missouri Coalition for the Environment* v. *EPA,* 311 F. 3d 853 (7th Cir. 2002)(''Sierra Club''). In this decision, the Court vacated the June 26, 2001, rule and remanded to EPA for entry of a final rule that reclassifies St. Louis as a serious nonattainment area for ozone. Although the Court addressed only EPA's action extending the attainment date for St. Louis, the Court's order vacated the other EPA actions in the rulemaking as well. EPA has reviewed the other actions in the June 26, 2001, rulemaking, and proposes to find, as discussed below, that the SIP actions vacated by the Court are no longer applicable requirements since the area has attained the NAAQS. EPA is also reproposing to approve the exemption granted in the June 26 rule to Illinois from the NO_X RACT requirements under section 182(f) of the Act, since the area has attained the NAAQS. Therefore, EPA is proposing to grant the exemption in this rulemaking, as discussed elsewhere in this notice. In addition, in a separate rulemaking, EPA is reclassifying the St. Louis area as a serious nonattainment area in accordance with the Court's Order. With respect to the redesignation criteria applicable to St. Louis, the following includes a discussion of the effect of the Court's action and of the reclassification on EPA's ability to redesignate the area.

The September 4, 1992, Calcagni memorandum (see ''Procedures for Processing Requests to Redesignate Areas to Attainment,'' Memorandum from John Calcagni, Director, Air Quality Management Division, September 4, 1992) describes EPA's interpretation of the Section 107(d)(3)(E) requirement. Under this interpretation, states requesting redesignation to attainment must meet the relevant CAA requirements that come due prior to the submittal of a complete redesignation request. Areas may be redesignated even though they have not adopted measures that come due after the submission of a complete redesignation request.

The May 10, 1995, Seitz memorandum (see ''Reasonable Further Progress, Attainment Demonstration, and Related Requirements for Ozone Nonattainment Areas Meeting the Ozone National Ambient Air Quality Standard,'' Memorandum from John S. Seitz, Director, Office of Air Quality Planning and Standards, May 10, 1995) states that certain SIP revisions need not be submitted for EPA to approve a request for redesignation, since the requirements would no longer be considered applicable requirements as long as the area continues to attain the 1-hour ozone NAAQS. The SIP requirements subject to this policy are described as the general provisions of subpart 1, part D, title I of the CAA (sections 171 and 172) concerning RFP, attainment demonstrations, and contingency measures, as well as the ozone-specific provisions of subpart 2 of the CAA. The Seitz memorandum was discussed above, in section I.D. and in more detail in the proposed rulemaking on the Cincinnati-Hamilton area, 65 FR 3630, 3631–3632 (January 24, 2000), also referenced previously.

EPA sets forth, in a separate rulemaking published today, a schedule for the states of Missouri and Illinois to submit the serious area SIP requirements within one year after today's date. However, because the States have already submitted complete redesignation requests, EPA believes, pursuant to the policies described above, that the serious nonattainment requirements are not applicable, for purposes of reviewing and acting on the redesignation requests. Therefore, for purposes of acting on the redesignation requests, EPA's analysis includes a proposed determination that the area has met the applicable CAA requirements for moderate nonattainment areas.

If the area violates the 1-hour ozone NAAQS prior to final action on the redesignation request, however, not only would the serious area requirements become applicable, but the redesignation request could not be approved because the area would no longer meet the criterion of having attained the 1-hour NAAQS. (Seitz memorandum dated May 10, 1995.) Furthermore, requirements of the CAA that come due subsequent to the area's submittal of a complete redesignation request would continue to be applicable to the area until a redesignation is approved but are not required as a prerequisite for redesignation (see section 175A(c) of the CAA). If the redesignation were to be disapproved, the States remain obligated to fulfill all of the serious area requirements.

The following is a discussion of the relevant requirements for the St. Louis area. Where appropriate, EPA addresses the SIP actions in the June 26, 2001, rulemaking vacated by the Court in *Sierra Club,* and explains its conclusion that each state has met its obligation to have fully approved SIPs for its portion of the nonattainment area. EPA also identifies the SIP actions for the area which pre-dated the June 26, 2001, rulemaking and were not impacted by the *Sierra Club* ruling. (As stated above, those prior actions were also discussed in the June 26, 2001, rulemaking.)

a. Section 110 Requirements

General SIP elements and requirements are delineated in section 110(a)(2) of Title I, part A of the CAA. These requirements include, but are not limited to, the following: Submittal of a SIP that has been adopted by the state after reasonable public notice and hearing; provisions for establishment and operation of appropriate apparatus, methods, systems, and procedures needed to monitor ambient air quality; implementation of a source permit program; provisions for the implementation of part C requirements (Prevention of Significant Deterioration (PSD)); provisions for the implementation of part D requirements (New Source Review (NSR) permit programs); provisions for stationary source emission control measures, source monitoring, and source reporting; provisions for air pollution modeling; and provisions for public and local agency participation in planning and emission control rule development.

Illinois

Review of the Illinois SIP, as codified in 40 CFR part 52, subpart O, and specifically 40 CFR 52.720, 52.722, and 52.726, shows that Illinois has an approved ozone SIP which meets the general requirements of section 110(a)(2) of the CAA, and which can be considered to be approved under section 110(k) of the CAA. The SIP, which has undergone public review: (a) Provides for the control of ozone precursor emissions, including those from stationary sources, in the Metro-East area at sufficient control levels to attain the ozone standard; (b) provides for continued monitoring of ozone in this area; (c) contains provisions covering permitting of new sources

under PSD and NSR provisions; and (d) where appropriate, requires stationary source monitoring.

Missouri

The Missouri SIP, is codified in 40 CFR part 52, subpart AA. If EPA finalizes its proposal for the revisions to the Missouri motor vehicle inspection and maintenance (I/M) program, published elsewhere in this **Federal Register**, as described below in the Vehicle Inspection/Maintenance Requirements, the Missouri ozone SIP will meet the applicable requirements of section 110 and part D, and can be considered to be approved under section 110(k) of the CAA. The SIP, which has undergone public review: (a) Provides for the control of ozone precursor emissions, including those from stationary sources, at sufficient control levels to attain the ozone standard; (b) provides for continued monitoring of ozone in this area; (c) contains provisions covering permitting of new sources under PSD and NSR provisions; and (d) where appropriate, requires stationary source monitoring.

b. Transport of Ozone Precursors to Downwind Areas

Modeling results generated using EPA's Regional Oxidant Model (ROM) indicate that ozone precursor emissions from various states outside of the Ozone Transport Region (OTR), in the Northeastern United States, contribute significantly to increased ozone concentrations in the OTR (as well as to increased ozone concentrations in other states in the Eastern portion of the United States). On October 27, 1998, (63 FR 57356), EPA issued a NO_X SIP call, requiring the District of Columbia and 22 states, including Illinois and Missouri, to reduce their statewide emissions of NO_X in order to reduce the transport of ozone and ozone precursors. In March 2000, the United States Circuit Court of Appeals for the District of Columbia largely upheld the SIP call, *Michigan* v. *EPA,* 213 F.3d 663 (D.C. Cir. 2000). Illinois is currently subject to the NO_X SIP call. However, the Court vacated and remanded the SIP call as it relates to Missouri.

Illinois

In compliance with EPA's NO_X SIP call, Illinois has developed rules governing the control of NO_X emissions from Electric Generating Units (EGUs), major non-EGU industrial boilers, and major cement kilns. EPA approved Illinois' rules for major non-EGU industrial boilers and major cement kilns on November 8, 2001 (66 FR 56449), and Illinois' rules for EGUs on November 8, 2001 (66 FR 56454).

Missouri

On February 22, 2002 (67 FR 8396), EPA proposed modifications to the NO_X SIP call for Missouri. EPA has not finalized the rulemaking to require Missouri to submit this SIP revision. When finalized, EPA anticipates that the rule will specify a schedule for submission of necessary SIP revisions. Missouri is not subject to the NO_X SIP call at this time.

c. Part D: General Provisions for Nonattainment Areas

Before an area may be redesignated to attainment, it must have fulfilled the applicable requirements of part D. Under part D of Title I of the CAA, an area's ozone classification determines the requirements to which it is subject. Subpart 1 of part D specifies the basic requirements applicable to all nonattainment areas. Subpart 2 of part D establishes additional requirements for nonattainment areas classified under Table 1 of section 181(a) of the CAA. As described in the General Preamble for Implementation of Title I of the CAA, specific requirements of subpart 2 may override or modify subpart 1's general provisions (57 FR 13501, April 16, 1992). Therefore, in order to be redesignated, the states must meet the applicable requirements of subpart 1 of part D—specifically sections 172(c) and 176, as well as the applicable requirements of subpart 2 of part D.

EPA believes that Illinois and Missouri have each met the requirements of subpart 1 of part D—specifically sections 172(c), and 176, insofar as applicable, as well as the applicable requirements of subpart 2 of part D of the CAA as described below. EPA is proposing to determine that the requirement for a SIP revision providing an attainment demonstration to meet the requirements of sections 172(c)(1), 182(b)(1), and 182(j) is not applicable. In addition, although the St. Louis area is being reclassified to a serious nonattainment area in a separate rulemaking, EPA believes that the serious area requirements which have not yet been adopted by the states [2] are not yet applicable to the St. Louis area until such time as they are due. The States of Missouri and Illinois are not required to submit the serious area SIP requirements for one year from today. The discussion below demonstrates how the St. Louis area has met the applicable requirements of subpart 1 of part D—specifically sections 172(c) and 176, as well as the applicable requirements of subpart 2 of part D.

d. Section 172(c) Requirements

This section contains general requirements for nonattainment area SIPs. For reasons discussed previously, EPA proposes to determine that certain requirements relating to attainment of the NAAQS do not apply to St. Louis because the area has attained the standard. A thorough discussion of the requirements contained in section 172(c) may be found in the General Preamble for Implementation of Title I (57 FR 13498, April 16, 1992). The following discussion summarizes the requirements in section 172(c) of the CAA. This is followed by a discussion of the extent to which the St. Louis area has met these requirements, and an identification of the requirements which EPA proposes to find are not applicable to the St. Louis area.

General Plan Requirements—The plan provisions, to the extent applicable, must provide for the implementation of all RACM as expeditiously as practicable. At a minimum, the plan must require the implementation of RACT for stationary sources. Also to the extent applicable, the plan must also provide for the attainment of the national primary ambient air quality standards (those standards set to protect public health);

RFP—RFP reflects a steady, annual progress towards attainment of the air quality standards, generally addressed in terms of annual emission reductions. To the extent applicable, the plan must document and provide for such annual progress;

Emissions Inventory—The plan needs to include a comprehensive, accurate, current inventory of actual emissions from all sources of the relevant pollutant as determined necessary by the Administrator to assure that the requirements of part D of the CAA are met;

Identification and Quantification of Allowable Emissions for Major New or Modified Stationary Sources—The quantified emissions must be consistent with the emission levels needed to achieve RFP and attainment of the NAAQS;

Permits for New and Modified Major Stationary Sources—The plan provisions must require permits for the construction and operation of new or

[2] Each state has adopted certain permit applicability rules which are dependent on the nonattainment area's classification (*e.g.,* the minimum applicability threshold is 50 tons per year of VOC or NO_X in a serious area as compared to a 100-ton minimum threshold in a moderate area). These rules apply, according to their terms, as long as the area remains classified as a ''serious'' nonattainment area for the 1-hour ozone standard.

modified major stationary sources anywhere in the nonattainment area;

Other Emission Control Measures—The plan must include enforceable emission limitations and other control measures and time schedules for implementation of emission controls as needed to assure attainment of the NAAQS by the applicable attainment date;

Compliance With Section 110(a)(2)—The plan must contain provisions to meet the requirements of section 110(a)(2) of the CAA (see the discussion of section 110 requirements above); and

Contingency Measures—The plan must provide, to the extent applicable, for the implementation of specific measures to be undertaken if the area fails to achieve RFP or to attain the NAAQS by the applicable attainment date. Such measures must take effect, if triggered, without further action by the State or the EPA.

(1) RACM and RACT

These requirements are discussed below under Subpart 2, Section 182 Requirements.

(2) RFP

The RFP requirement under section 172(c)(2) is defined as progress that must be made toward attainment. Section 182(b)(1)(A) sets forth the specific requirements for RFP. As described elsewhere in this proposal, EPA believes it is reasonable to interpret that the Clean Air Act provisions regarding RFP and attainment demonstrations, along with certain other related provisions do not require certain SIP submissions if an ozone nonattainment area subject to those requirements is monitoring attainment of the ozone standard (*i.e.*, has three consecutive years of complete, quality-assured, air quality monitoring data) without those provisions being implemented. However, EPA has approved the regulations that were submitted by Illinois and Missouri, and their respective 15 percent rate-of-progress (or ROP) plans, as described below in the discussion of the section 182 requirements. These plans were submitted before the 2000 to 2002 time frame during which attainment has been monitored, and provided permanent and enforceable emission reductions for the St. Louis area during the 2000 through 2002 ozone seasons (*see* the discussion under the heading ''Criterion 3,'' below). These previously-approved SIP control measures must continue to be implemented and enforced and are not affected by this action.[3]

(3) Emissions Inventories

These requirements are discussed below under Subpart 2, Section 182 Requirements.

(4) Identification and Quantification of Allowable

Emissions for Major New or Modified Stationary Sources and Permits for New and Modified Major Stationary Sources

Illinois

The state of Illinois has a fully approved set of adopted Prevention of Significant Deterioration (PSD) and nonattainment area New Source Review (NSR) rules, as documented at the following EPA Web site: *http://www.epa.gov/region5/air/sips/sips.htm.*

Missouri

The state of Missouri has a fully approved set of adopted Prevention of Significant Deterioration (PSD) and nonattainment area New Source Review (NSR) rules, as documented at the following EPA Web site: *http://www.epa.gov/region07/programs/artd/air/rules/missouri/chap6.htm.*

Both states' maintenance plans for the St. Louis ozone nonattainment area and the 15 percent ROP plans for the area document expected additional VOC and NO_X emissions due to major source growth. Where possible, the states specifically identified the emission increases expected by source category. The emission growth estimates take into account the allowable emissions increases expected to result for each source category. As such, EPA believes the states have complied with the requirement for the identification and quantification of allowable emissions due to major new or modified stationary sources.

(5) Other Emission Control Measures

Illinois

Illinois' maintenance plan for the St. Louis area indicates emission control measures which will maintain the 1-hour ozone standard until 2014. In addition, the state's 15 percent ROP plan identifies sufficient emission controls to achieve the required rate of progress (*see* EPA's approval of Illinois' ROP plan at 62 FR 37494, July 14, 1997).

Missouri

Missouri's maintenance plan for the St. Louis area indicates emission control measures which will maintain the 1-hour ozone standard until 2014. In addition, the State's 15 percent ROP plan identifies sufficient emission controls to achieve the required rate of progress (*see* EPA's approval of Missouri's ROP plan at 65 FR 31485, May 18, 2000).

(6) Contingency Measures

In the June 26, 2001, rulemaking, EPA found that both states had met their obligations to have contingency measures in the event of failure to attain the 1-hour standard. Although that finding was not challenged, the finding was vacated in the *Sierra Club* decision. However, because the area has now attained the standard, and for the reasons described previously, the relevant contingency measures are those necessary to maintain the standard. The contingency measures are identified below, and a more detailed discussion is included under the discussion of the maintenance plan, in Criterion 4, below.

Illinois

Illinois' ozone redesignation request for the St. Louis area contains a contingency plan for the area that will result in the adoption and implementation of contingency measures as needed to maintain the ozone standard in the St. Louis area.

Missouri

Missouri's ozone redesignation request for the St. Louis area contains a contingency plan for the area that will result in the adoption and implementation of contingency measures as needed to maintain the ozone standard in the St. Louis area.

e. Section 176 Conformity Requirements

Section 176(c) of the CAA requires states to establish criteria and procedures to ensure that Federally supported or funded projects conform to the air quality planning goals in the applicable SIP. The requirement to determine conformity applies to transportation plans, programs and projects developed, funded or approved under Title 23 U.S.C. of the Federal Transit Act (''transportation conformity''), as well as to all other Federally supported or funded projects (''general conformity''). Section 176 further provides that state conformity revisions must be consistent with Federal conformity regulations that the CAA required the EPA to promulgate.

EPA believes it is reasonable to interpret the conformity requirements as

[3] The RFP requirements in section 182(c)(2)(B), relating to RFP for serious nonattainment areas, are not yet due (as explained elsewhere, they would be due within a year after the reclassification), and, in any event, are not applicable requirements for the reasons stated above.

not applying for purposes of evaluating the redesignation request under section 107(d). The rationale for this is based on a combination of two factors. First, the requirement to submit SIP revisions to comply with the conformity provisions of the CAA continues to apply to areas after redesignation to attainment, since such areas would be subject to a section 175A maintenance plan. Second, the EPA's Federal conformity rules require the performance of conformity analyses in the absence of Federally approved state rules. Therefore, because areas are subject to the conformity requirements regardless of whether they are redesignated to attainment and must implement conformity under Federal rules if state rules are not yet approved, EPA believes it is reasonable to view these requirements as not applying for purposes of evaluating a redesignation request. *See, Wall* v. *EPA,* 265 F. 3d 426, 439 (6th Cir. 2001) upholding this interpretation.

Illinois

The State of Illinois has fully adopted general conformity procedures, approved by the EPA on December 23, 1997 (62 FR 67000). The State does not have fully adopted and approved transportation conformity procedures in the SIP. For the reasons stated above, EPA believes the adoption of conformity rules is not a prerequisite for redesignation. For the Illinois portion of the area, the Federal conformity rules continue to apply.

Missouri

The State of Missouri has adopted general conformity procedures found at 10 CSR 10–6.300, approved by EPA on May 14, 1997 (62 FR 26395), and has adopted transportation conformity procedures found at 10 CSR 10–5.480, approved by EPA on September 5, 1997 (62 FR 46880), corrected on February 10, 1998 (63 FR 6645).

f. Subpart 2 Section 182 Requirements

For purposes of this redesignation, the part D, subpart 2, section 182 (a) and (b) requirements for a nonattainment area apply to the St. Louis area.

g. Attainment Demonstration

Section 182(b)(1) of the CAA requires an attainment demonstration that provides specific annual reductions in emissions necessary to attain the NAAQS by the attainment date. Section 182(j) provides additional requirements for multistate areas.

EPA approved Missouri's and Illinois' attainment demonstrations in the June 26, 2001, rulemaking (66 FR 33996). This rulemaking was vacated in the November 25, 2002, U.S. Court of Appeals for the Seventh Circuit (Court) decision in the *Sierra Club* case (311 F. 3d 853, 862). The Court vacated the rulemaking based on EPA's granting of an attainment date extension for the area, which the Court found unlawful. In its petition, the Sierra Club raised other objections to the rulemaking, including EPA's approval of the attainment demonstration. The Court stated that it would not reach these other issues, and that it expressed no opinion on them. *Id.* However, because the Court vacated the entire rule, the area does not have an approved attainment demonstration.

Although the approval of the attainment demonstration for the St. Louis area has been vacated, for the reasons discussed previously, EPA believes that the attainment demonstration requirement under Section 182(b)(1) and 182(j) is no longer applicable provided the area continues to attain the 1-hour ozone NAAQS. This conclusion is based upon the monitored attainment with the NAAQS. EPA believes that upon monitoring attainment, there is no need for an area to take further action regarding additional measures to achieve attainment. This is consistent with the interpretation of certain section 172(c) requirements provided by EPA in the General Preamble to Title I. EPA stated in the Preamble no other measures to provide for attainment would be needed by areas seeking redesignation to attainment since ''attainment will have been reached'' (57 FR 13564). Upon attainment of the NAAQS, the focus of state planning efforts shifts to the maintenance of the NAAQS and the development of a maintenance plan under section 175A. (See also, the proposal on Cincinnati-Hamilton, discussed previously in Section I.F.2 of this proposal, 65 FR 3630, 3631–32.)

h. 1990 Base Year Inventory and Periodic Emissions Inventories Updates

Illinois

Illinois has submitted a complete and accurate 1990 emissions inventory for VOC and NO_X for the Metro-East area as noted in EPA's final approval of the emissions inventory on March 14, 1995 (60 FR 13631). The 1990 emissions inventory has formed the basic emissions input for the State's ROP plan.

Illinois has submitted updated versions of the emissions inventories for 1996 and 2000.

Missouri

Missouri submitted a complete and accurate 1990 emissions inventory of VOC and NO_X for the St. Louis area as noted in EPA's final approval of the emissions inventory on February 17, 2000 (65 FR 8060).

Missouri submitted updated versions of the emissions inventories for 1996 as part of the ROP plan approved on May 18, 2000 (65 FR 31485), and for 2000 as part of the redesignation request submitted on December 6, 2002.

i. Emissions Statement Requirements

Illinois

As noted in the following EPA web site for adopted SIP revisions, Illinois' SIP includes regulations requiring annual emissions statements from major sources. The Web site is: *http://www.epa.gov/region5/air/sips/sips.htm*

Missouri

As noted in the following EPA web site for adopted SIP revisions, Missouri's SIP includes regulations requiring annual emissions statements from major sources. The Web site is: *http://www.epa.gov/region07/programs/artd/air/rules/missouri/chap6.htm.*

Missouri's requirements to submit annual emissions statements from major sources can be found at the above web site at 10 CSR 10–6.110.

j. 15 Percent Rate-Of-Progress Plan Requirements

Section 182(b)(1) of the CAA requires the submission of a 15 percent Rate-Of-Progress (ROP) plan. This plan is to provide for VOC emission reductions in the nonattainment area of at least 15 percent, from the 1990 baseline emissions levels, by no later than November 15, 1996. A discussion of the extent to which the requirement is applicable to an area monitoring attainment of the standard is included above. We note that the Missouri and Illinois SIPs contain these provisions as indicated below.

Illinois

In November 1994 the IEPA submitted a 15 percent ROP plan for the control of VOC emissions in the Metro-East area. This ROP plan was supplemented by the state through a submittal on January 31, 1995. The ROP plan, as supplemented, was approved by the EPA in a final rulemaking on July 14, 1997 (62 FR 37494).

Missouri

In 1995 MDNR submitted a 15 percent ROP plan for the control of VOC emissions in the St. Louis area. On

March 18, 1996, EPA proposed a limited approval of the ROP plan (61 FR 10968). On November 12, 1999, MDNR submitted a revised ROP. The revised ROP plan was approved by the EPA in a final rulemaking on May 18, 2000 (65 FR 31485). EPA's approval of the Missouri ROP was upheld in *Sierra Club* v. *EPA,* 252 F.3d 943 (8th Cir. 2001).

k. VOC RACT Requirements

Sections 172(c) of the CAA specifies that SIPs must provide for the implementation of all Reasonably Available Control Measures (RACM) including all Reasonably Available Control Technology (RACT) as expeditiously as practicable to attain the NAAQS. At a minimum, the SIPs must require the implementation of RACT for two classes of VOC sources. The VOC source classes are: (a) All sources covered by a Control Techniques Guideline (CTG) document issued by the Administrator by the date of attainment of the ozone standard; and (b) all other major non-CTG stationary sources.

Illinois

The Illinois redesignation request, submitted on December 30, 2002, shows that Illinois has adopted and implemented all required VOC RACT rules. EPA, through a number of rulemakings, has approved RACT rules for Illinois fully meeting the VOC RACT requirements of the CAA. The contents of these RACT rules and EPA's rulemakings approving these RACT rules are documented at the following EPA Web site: *http://www.epa.gov/region5/air/sips/sips.htm.*

Missouri

The Missouri redesignation request, submitted on December 6, 2002, shows that Missouri has adopted and implemented all required VOC RACT rules. EPA, through a number of rulemakings, has approved RACT rules for Missouri fully meeting the RACT requirements of the CAA. The contents of these RACT rules and EPA's rulemakings approving these RACT rules are documented at the following EPA Web site: *http://www.epa.gov/region07/programs/artd/air/rules/missouri/chap5.htm.*

l. RACM

On April 19, 2001, EPA proposed to approve Illinois' and Missouri's SIPs for the St. Louis area as meeting the RACM requirements of the CAA (66 FR 20122). The approval of the Illinois and Missouri SIPs as meeting the RACM requirements of the CAA was finalized on June 26, 2001 (66 FR 33996). As explained previously, the June 26, 2001, rule was vacated on November 25, 2002, by the Seventh Circuit in the *Sierra Club* case.

EPA believes that no additional RACM controls beyond what are already required in the SIP are necessary for redesignation to attainment. The General Preamble, April 16, 1992 (57 FR 13560), explains that section 172(c)(1) requires the plans for all nonattainment areas to provide for the implementation of RACM as expeditiously as practicable. EPA interprets this requirement to impose a duty on all nonattainment areas to consider all available control measures and to adopt and implement those measures that are reasonably available and necessary to attain as expeditiously as practicable. However, measures need not be adopted, and would not be considered RACM, if they would not accelerate attainment (see 57 FR 13498, 13560). Because attainment has been achieved, no additional measures are needed to provide for attainment.

The suspension of the attainment demonstration requirements pursuant to our determination of attainment include the section 172(c)(1) RACM requirements as well. The General Preamble treats the RACM requirements as a ''component'' of an area's attainment demonstration. Thus, the suspension of the attainment demonstration requirement pursuant to our determination of attainment applies to the RACM requirement, since it is a component of the attainment demonstration.

m. Stage II Vapor Recovery Requirements

Section 182(b)(3) of the CAA requires states to submit Stage II vapor recovery rules.

Illinois

The Stage II vapor recovery regulations for the Metro-East area were originally found in Illinois Administrative Code, Title 35: Environmental Protection; subtitle B: Air Pollution, chapter I: Pollution Control Board, part 219: Organic Material Standards and Limitations for the Metro-East Are: subpart Y: Gasoline Distribution; section 219.583: Gasoline Dispensing Facilities—Storage Tank Filling Operations, and section 219.586: Gasoline Dispensing Facilities—Motor Vehicle Fueling Operations. EPA approved the incorporation of these regulations into the Illinois SIP on January 12, 1993 (58 FR 3841).

Section 202(a)(6) of the CAA provides that Stage II vapor recovery regulations are not required in moderate ozone nonattainment areas if EPA promulgates On-Board Vapor Recovery (OBVR) regulations for vehicles. EPA promulgated such regulations on April 6, 1994 (59 FR 16262), which became effective on May 6, 1994.

Pursuant to section 202 of the CAA, the State of Illinois repealed the Stage II vapor recovery regulations for the Metro-East area and requested a SIP revision to remove these regulations from the SIP. EPA approved the removal of these regulations from the SIP on December 16, 1994 (59 FR 64853). Therefore, the Metro-East area has no Stage II vapor recovery regulations currently in place in the SIP, and is not required to have such regulations by virtue of section 202(a)(6) of the CAA.

Missouri

Missouri established a Stage II vapor recovery program in the 1970s and has revised the program periodically. On May 18, 2000 (65 FR 31489), EPA approved into Missouri's SIP the most recent revisions to the state rule entitled ''Control of Petroleum Liquid Storage, Loading, and Transfer'' (10 CSR 10–5.220). This rule fully adopts and implements the Stage II vapor recovery requirements in Missouri.

n. Vehicle Inspection/Maintenance (I/M) Requirements

Section 182(b)(4) and EPA's final I/M regulations in 40 CFR part 51, subpart S require the states to submit a fully adopted I/M program.

Illinois

EPA approved an enhanced vehicle I/M program for the Metro-East area as part of the Illinois SIP on February 22, 1999 (64 FR 8517). This revision to the SIP became effective on April 23, 1999.

Missouri

EPA approved Missouri's I/M program on May 18, 2000 (65 FR 31480). It can be found at 10 CSR 10–5.380.

In April 2000, Missouri began testing vehicles under its SIP approved I/M program. In April 2001, EPA published revised I/M program requirements including the use of on-board diagnostics (OBD) testing. These rules are found at 40 CFR part 85. The use of OBD testing was to begin January 1, 2002.

Under EPA's new OBD rule, states were given the opportunity to request an extension of one year to implement the OBD testing. If requested, a state could delay implementation of OBD testing until January 1, 2003. In a letter dated January 10, 2002, the MDNR stated its intent to implement OBD testing but requested to delay implementation of

OBD testing along with incorporating a phase-in period. In this letter, MDNR requested a one-year delay in implementing the OBD testing, along with a two-year phase-in period. Under MDNR's request, full implementation of the OBD testing will not occur until January 1, 2005.

In August 2002, Missouri revised its state rule incorporating the requested delay and phase-in period. The new state rule requires OBD testing to begin January 1, 2003, but allows for the use of the transient emissions test only, for the retest, if a vehicle fails the initial OBD emissions test during the two-year phase-in period. EPA's rule requires an OBD test for the retest during the phase-in period.

In a separate proposed rulemaking in this **Federal Register**, EPA is proposing to modify Missouri's SIP by approving revisions to the state's Motor Vehicle Emission Inspection rule found at 10 CSR 10–5.380. A detailed discussion of the revision and EPA's rationale for approval can be found in that proposal.

The regulation at 40 CFR 51.372(c) states, in part, that a redesignation request for any nonattainment area that would qualify for redesignation to attainment shall receive full approval of a SIP submittal if the submittal contains legal authority to implement an I/M program, the inclusion of an I/M upgrade into the contingency measures portion of the maintenance plan, and a contingency commitment that includes the legal authority and an enforceable commitment and schedule for adoption and implementation of the OBD program.

Pursuant to the provisions of 40 CFR 51.372(c), by incorporating the OBD testing program as a contingency into the maintenance plan (the OBD testing program is the I/M upgrade required by EPA's new OBD rule), and by meeting the other requirements specified in 40 CFR 51.372(c), the SIP can receive full approval.

The maintenance plan submitted by Missouri contains the OBD testing program, consistent with EPA's OBD rule, as a contingency measure in the maintenance plan. It also contains a demonstration of legal authority to adopt the program, and a schedule for adoption with appropriate milestones. EPA believes the submission meets the requirement of 40 CFR 51.372(c). A more detailed discussion of the rule is contained in EPA's proposed rule on the I/M revisions for Missouri elsewhere in this **Federal Register**. Thus, upon completion of the accompanying rulemaking approving Missouri's I/M rule into the SIP, EPA believes that the Missouri SIP for the St. Louis 1-hour ozone nonattainment area will satisfy all of the Section 182(b)(4) requirements of the CAA. Note, however, that EPA will not approve the redesignation request unless it takes final action to approve the I/M SIP revision.

o. NO_X Emission Control Requirements

Section 182(f) establishes NO_X requirements for ozone nonattainment areas which require the same provisions for major stationary sources of NO_X as apply to major stationary sources of VOCs. One of the requirements for major sources of VOCs is RACT. However, section 182(f) also provides that these requirements do not apply to an area if the Administrator determines that NO_X reductions would not contribute to attainment.

Illinois

As part of the June 26, 2001, rulemaking (66 FR 33996) regarding the St. Louis ozone nonattainment area, EPA granted a waiver to the state of Illinois from the section 182(f) requirements for NO_X RACT. The basis for the waiver was that Illinois demonstrated that additional NO_X emission controls in the Metro-East area would not contribute to the attainment of the 1-hour ozone standard in the area. EPA concluded that the area would achieve the 1-hour ozone standard without these additional NO_X emission controls. This conclusion was not challenged in the *Sierra Club* case and was not addressed by the Court. However, the grant of the waiver was vacated as part of the Court's action on the June 26, 2001, rule.

EPA's policy on the NO_X RACT requirements for areas which qualify for redesignation is stated in the September 17, 1993, memorandum from Michael H. Shapiro, referenced previously. The memorandum states that additional NO_X reductions would not contribute to attainment if attainment is already being monitored, but that such reductions might contribute to maintenance. Therefore, EPA stated that it could allow an exemption from the section 182(f) NO_X requirement, in the absence of a modeling demonstration, if the maintenance plan contains NO_X RACT as a contingency measure.

The EPA is reproposing to approve Illinois' request for an exemption from the NO_X RACT requirement. This proposal is based on the area attaining the 1-hour ozone NAAQS. Illinois has included NO_X RACT as a contingency measure in its maintenance plan. Therefore, EPA believes that it can exempt the Illinois portion of the St. Louis area from the section 182(f) requirements. If EPA finalizes this exemption as proposed, and finalizes the redesignation as proposed, all controls previously adopted by Illinois must continue to be implemented, but no additional NO_X RACT measures would be required. However, if there is a violation of the ozone NAAQS in any portion of the St. Louis area, Illinois would be required to evaluate, and if appropriate, implement additional NO_X controls to address the violation.

Missouri

On May 18, 2000 (65 FR 31482), EPA approved Missouri's NO_X RACT rule into the SIP. This rule can be found at 10. CSR 10–5.510 and imposes RACT requirements for major sources of NO_X emissions. This rule meets the Section 182(f) requirements for the Missouri portion of the St. Louis area.

Based on the analysis described above, EPA believes the area meets the requirements for redesignation in Section 107(d)(3)(E)(ii) and (v).

3. Criterion (3): The Improvement in Air Quality Must Be Due to Permanent and Enforceable Reductions in Emissions

The improvement in air quality must be due to permanent and enforceable reductions in emissions resulting from implementation of the SIP, Federal measures, and other state-adopted measures.

a. Emission Controls

EPA believes that the states have demonstrated that the observed air quality improvements are due to the implementation of permanent and enforceable emission reductions through the implementation of emission controls contained in their SIPs.

Illinois

Subsequent to the 1990 CAA amendments, Illinois implemented a number of emission controls. The area has complied with all of the emission requirements for a moderate ozone nonattainment area as required by the CAA.

Some of the emission reductions were achieved through the implementation of a 15 percent ROP plan, approved by EPA on December 18, 1997 (62 FR 66279). The 15 percent ROP plan produced a VOC emission reduction of 38.1 tons per day in the Metro-East area, and included both Federal and state emission control measures, including the use of low volatility gasoline, more stringent Tier I motor vehicle emission standards, implementation of a more stringent vehicle inspection and maintenance (I/M) program, controls on area sources, and the adoption of tighter emissions limits on existing stationary

sources. Some of the specific state emission control measures included in the 15 percent ROP plan are:

- Basic I/M for Motor Vehicles
- Transportation Control Measures (TCMs)
- Low-Volatility (low Reid Vapor Pressure (RVP)) Gasoline
- Tightened Reasonably Available Control Technology (RACT) Standards for Some Source Categories
- RACT for Sources Covered By New Control Techniques Guidelines (CTGs)
- Architectural Surface Coating Standards
- Volatile Organic Liquids Storage Facility Controls
- Automobile Refinishing Operation Controls
- Marine Vessel Loading Emission Controls

All of the emission control measures contained in Illinois' 15 percent ROP plan have been fully adopted, have been implemented, and are enforceable in the Metro-East area.

Illinois has adopted and implemented emission control rules requiring existing sources of VOC to meet, at minimum, RACT. These requirements apply to sources in categories covered by CTGs and other major non-CTG sources. Some of these RACT emission controls were achieved in addition to the RACT controls reflected in the 15 percent ROP plan.

The stationary NO_X source emission reductions in Illinois are primarily due to the implementation of acid rain emission controls implemented in compliance with Title IV of the CAA.

Missouri

MDNR explained that some of the VOC emission reductions were due to the implementation of Missouri's 15 percent ROP plan, including its implementation of a centralized motor vehicle inspection and maintenance program and stationary source controls. Additional reductions were due to tighter Federal standards for new vehicles, and some were due to requirements for reformulated and low RVP gasoline for motor vehicles. In addition, Title IV of the CAA resulted in reduced NO_X emissions from utility sources.

b. Meteorological Conditions

In addition to identifying the controls which have led to emission reductions and air quality improvements, both Illinois and Missouri have evaluated whether ozone air quality improvements in the St. Louis area could be attributable to favorable meteorological conditions, by comparing the trend of 1-hour ozone design values [4] to the number of ozone conducive days [5] that have occurred annually from 1989 to the present. While ozone design values trended significantly downward from 1989 to the present, the number of ozone conducive days, which varied from year-to-year, showed no significant trend over the period studied. Therefore, EPA believes that concentration is not due to changes in meteorology. EPA believes that reductions in emissions due to regulatory control programs have led to the improvement in ozone air quality.

Illinois

The IEPA assessed the changes in VOC and NO_X emissions in the Metro-East area for 1990 and 2000 (the first year of the three year attainment period). The 1990 emissions are the base year emissions taken from an inventory approved by EPA on September 13, 1994 (59 FR 46920). To derive the 2000 emissions, the IEPA used a 1999 update to the emissions inventory. Emissions documented in this emissions inventory were grown to 2000 to derive the 2000 attainment year emissions. Point source emissions were grown using EPA's EGAS model. Area source emissions were grown using source activity levels (indicators, such as population, source sector employment, etc.) appropriate for each source category grown to the 2000 levels and applied using appropriate source emission factors. On-road mobile source emissions for 2000 were calculated using EPA's MOBILE6 emissions model and 1999 Vehicle Miles Traveled (VMT) data grown to 2000 assuming a 2 percent per year growth rate. On-road mobile source emissions for 1990 were calculated using EPA's MOBILE6 emissions model. Off-road emissions were grown to 2000 using source sector activity levels and growth factors employed in the 1999 periodic emissions inventory update.

The table below documents the 1990 and 2000 VOC and NO_X emissions in the Metro-East area.

1990 AND 2000 METRO-EAST AREA VOC AND NO_X EMISSIONS

[Emissions in tons per ozone season weekday]

Source category	VOC	NO_X
1990		
Point Sources	74.05	95.85
Area Sources	33.84	1.66
On-Road Mobile Sources	43.27	45.13
Off-Road Mobile Sources	23.49	23.99
1990 Totals	174.65	166.63
2000		
Point Sources	17.91	61.91
Area Sources	28.32	1.18
On-Road Mobile Sources	26.57	54.71
Off-Road Mobile Sources	21.31	23.85
2000 Totals	94.11	141.64

It can be seen that both the VOC emissions and NO_X emissions have decreased in the Metro-East area between 1990 and 2000. The IEPA notes that these emission decreases are primarily due to the application of permanent and enforceable emission controls, and that these emission controls have contributed to the ozone air quality emission improvement in the St. Louis area.

Missouri

Similar to Illinois, Missouri compared VOC and NO_X emissions in 1990 (the base year emissions inventory) to those in 2000 (the attainment year emissions inventory). The 2000 emissions were derived by growing the 1999 periodic emissions inventory emissions. The 1999 periodic emissions inventory and source growth parameters are documented in the state's redesignation request. MDNR developed the 1990 on-road emissions using EPA's MOBILE5b emissions model. For purposes of comparison, MDNR included in the redesignation request, 2000 on-road emissions developed using EPA's MOBILE5b emissions model and MOBILE6 emissions model. Note that the discussion below only includes the 2000 on-road mobile emissions derived from using the MOBILE6 emissions model.

The following table presents the 1990 and 2000 VOC and NO_X emissions for the Missouri portion of the St. Louis ozone nonattainment area.

[4] An ozone design value is the fourth highest daily peak 1-hour ozone concentration at the worst-case ozone monitor for a given three-year period.

[5] The IEPA and the MDNR have analyzed ozone concentrations and meteorological conditions in the St. Louis area, and have found that peak ozone concentrations are highly dependent on certain meteorological conditions. Days are judged to be conducive to high ozone concentrations if the following conditions simultaneously exist:

- Maximum temperatures greater than 85 degrees Fahrenheit
- Wind speeds less than 10 miles per hour
- Solar insolation greater than 500 Langleys
- Little or no precipitation
- Southerly wind directions.

1990 AND 2000 MISSOURI PORTION OF THE ST. LOUIS NONATTAINMENT AREA VOC AND NO_X EMISSIONS

[Emissions in tons per ozone season weekday]

Source category	VOC	NO_X
1990		
Point Sources	81.97	347.61
Area Sources	87.74	29.47
On-Road Mobile Sources	135.42	135.00
Off-Road Mobile Sources	64.30	114.32
1990 Totals	369.43	626.40
2000		
Point Sources	46.59	165.96
Area Sources	57.38	32.27
On-Road Mobile Sources	103.79	181.75
Off-Road Mobile Sources	40.59	73.16
2000 Totals	248.35	453.14

As can be seen from the above table, both the VOC and the NO_X emissions in the Missouri portion of the St. Louis ozone nonattainment area have been significantly reduced between 1990 and 2000 (VOC emissions have been reduced by 121 tons per day and NO_X emissions have been reduced by 173 tons per day). These emission reductions are primarily due to the implementation of permanent and enforceable emission controls and are primarily responsible for the observed improvement in ozone air quality in the area.

The states have demonstrated that the implementation of permanent and enforceable emission controls have reduced local VOC and NO_X emissions. The states have also demonstrated that year-to-year meteorological changes and trends are not the likely source of the overall, long-term improvement in ozone levels. EPA believes that emission reductions are the cause of the long-term improvement in ozone levels, and are the cause of the area achieving attainment of the ozone standard.

4. Criterion (4): The Area Must Have a Fully Approved Maintenance Plan Meeting the Requirements of Section 175A

Section 175A of the CAA sets forth the elements of a maintenance plan for areas seeking redesignation from nonattainment to attainment. The maintenance plan is a SIP revision that provides for maintenance of the relevant NAAQS in the area for at least 10 years after redesignation. The Calcagni memorandum dated September 4, 1992, provides additional guidance on the required content of a maintenance plan. An ozone maintenance plan should address the following five areas: the attainment emissions inventory, maintenance demonstration, monitoring network, verification of continued attainment, and a contingency plan. The attainment emissions inventory identifies the emissions level in the area that is sufficient to attain the 1-hour ozone NAAQS, based on emissions during a three-year period which had no monitored violations. Maintenance is demonstrated by showing that future emissions will not exceed the level established by the attainment inventory. The ''attainment inventory'' approach to demonstrating maintenance was upheld in *Wall* v. *EPA,* 426 F. 3d at 435–37. Provisions for continued operation of an appropriate air quality monitoring network are to be included in the maintenance plan. The state must show how it will track and verify the progress of the maintenance plan. Finally, the maintenance plan must include a list of potential contingency measures which ensure prompt correction of any violation of the 1-hour ozone NAAQS.

a. Attainment Emissions Inventory

Both Illinois and Missouri selected 2000 as ''the attainment year'' for purposes of demonstrating attainment of the 1-hour ozone NAAQS.

The projected 2000 VOC and NO_X emissions for the St. Louis area are summarized in the table above.

b. Maintenance Demonstration

To demonstrate maintenance of the ozone standard through a ten-year maintenance period, both Illinois and Missouri projected VOC and NO_X emissions for the St. Louis area to 2007 and 2014 and compared these projected emissions to the 2000 attainment year emissions. The 2007 emission estimates were generated to test a midpoint in the ten-year maintenance period.

The following tables summarize the VOC and NO_X emission estimates for the St. Louis area for 2000, 2007, and 2014 periods.

ILLINOIS 2000, 2007, AND 2014 METRO-EAST AREA VOC AND NO_X EMISSIONS

[Emissions in tons per ozone season weekday]

Source category	VOC	NO_X
2000		
Point Sources	17.91	61.91
Area Sources	28.32	1.18
On-Road Mobile Sources	26.57	54.71
Off-Road Mobile Sources	21.31	23.85
2000 Totals	94.11	141.64
2007		
Point Sources	21.19	54.34
Area Sources	28.07	1.24
On-Road Mobile Sources	16.31	36.87

ILLINOIS 2000, 2007, AND 2014 METRO-EAST AREA VOC AND NO_X EMISSIONS—Continued

[Emissions in tons per ozone season weekday]

Source category	VOC	NO_X
Off-Road Mobile Sources	16.04	19.07
2007 Totals	81.61	111.52
2014		
Point Sources	24.49	62.13
Area Sources	28.10	1.29
On-Road Mobile Sources	10.13	18.72
Off-Road Mobile Sources	13.26	14.54
2014 Totals	75.98	96.67

MISSOURI 2000, 2007, AND 2014 ST. LOUIS AREA VOC AND NO_X EMISSIONS

[Emissions in tons per ozone season weekday]

Source category	VOC	NO_X
2000		
Point Sources	46.59	165.96
Area Sources	57.38	32.27
On-Road Mobile Sources (MOBILE6-based estimates)	103.79	181.75
Off-Road Mobile Sources	40.59	73.16
2000 Totals	248.35	453.14
2007		
Point Sources	47.72	149.5
Area Sources	57.19	34.12
On-Road Mobile Sources	74.46	130.55
Off-Road Mobile Sources	27.91	66.01
2007 Totals	207.28	380.18
2014		
Point Sources	51.73	154.57
Area Sources	59.42	35.58
On-Road Mobile Sources	47.14	68.59
Off-Road Mobile Sources	24.28	58.84
2014 Totals	182.57	317.58

c. Monitoring Network

Missouri and Illinois have addressed the maintenance plan requirements for monitoring and emissions inventories. Both have committed to continue the operation of the monitors in the area in accordance with 40 CFR part 58.

d. Verification of Continued Attainment

Both the states of Illinois and Missouri have the legal authority to implement and enforce the requirements of the ozone maintenance plan. This includes the authority to adopt, implement, and enforce any subsequent emission control contingency measures determined to be necessary to correct future ozone attainment problems.

To implement the ozone maintenance plan, the states will continue to monitor ozone levels in the St. Louis area. The states also committed to update the emissions inventory for the St. Louis area every three years for the duration of the maintenance plan. The ozone monitoring data and the updated emissions inventories will be used through the states' contingency plan to assure maintenance of the 1-hour ozone standard.

e. Contingency Plan

The contingency plan portion of each state's maintenance plans delineate the states' planned actions in the event of future 1-hour ozone standard violations, increasing ozone levels threatening a subsequent violation of the ozone standard, and unanticipated increases in ozone precursor emissions threatening a subsequent violation of the ozone standard. Illinois and Missouri have prepared similar and compatible contingency plans, with some differences in the possible emission control contingency measures list selected for each state. The states have developed contingency plans with several levels of triggered actions depending on whether the ozone standard has actually been violated after the redesignation of the area to attainment or whether a subsequent violation of the ozone standard is threatened on the basis of increased ozone concentrations approaching the standard or unanticipated significant increases in ozone precursor emissions. Each state has also committed to continue to implement all control measures included in the SIP prior to redesignation consistent with section 175A(d) of the CAA.

The action trigger levels and planned corrective actions in each contingency plan are the following:

A Level I Trigger will be exceeded if: (1) The monitored ambient ozone levels exceed 124 parts per billion, one-hour averaged, more than once per year at any monitoring site in the St. Louis maintenance area (the current St. Louis ozone nonattainment area), or more than two exceedances in any two- or three-year period; or (2) the St. Louis maintenance area's VOC or NO_X emissions for 2005 or 2008 increase more than 5 percent above the 2000 attainment levels. In the event one of these action trigger levels are exceeded, Illinois and Missouri will work together to evaluate the situation and determine if adverse emissions trends are likely to continue. If so, the states will determine what and where emission controls may be required to avoid a violation of the 1-hour ozone NAAQS. A study shall be completed within nine months of the determination of the action trigger exceedance.

A Level II Trigger will be exceeded if a violation of the 1-hour ozone NAAQS at any monitoring site in the St. Louis ozone maintenance area is recorded after the area is redesignated to attainment of the standard. If this trigger is exceeded, Illinois and Missouri will work together to conduct a thorough analysis to determine appropriate measures, from those listed below, to address the cause of the ozone standard violation.

Missouri

The contingency plan for Missouri lists a number of possible contingency measures. The plan calls for the appropriate contingency measures to be adopted and implemented within 18 months of a Level I or Level II trigger being exceeded. The list of possible contingency measures in Missouri's contingency plan include the following:

Point Source Measures—

- NO_X SIP Call Phase II (non-utility)
- Apply RACT to smaller existing sources
- Tighten RACT for existing sources covered by EPA Control Techniques Guidelines
- Expanded geographic coverage of current point source measures
- Maximum Available Control Technology for industrial sources
- New source offsets and Lowest Achievable Emission Rates
- Other measures to be identified

Mobile Source Measures—

- Transportation Control Measures, including, but not limited to, area-wide rideshare programs, telecommuting, transit improvements, and traffic flow improvements.
- High Enhanced I/M (OBDII)
- California Engine Standards
- Other measures to be identified

Area Source Measures—

- California Architectural/Industrial Maintenance (AIM)
- California Commercial and Consumer Products
- Broader geographic applicability of existing measures
- California Off-road Engine Standards
- Other measures to be identified

Illinois

The contingency plan for Illinois lists a number of possible contingency measures. The plan calls for the appropriate contingency measures to be adopted no later than 18 months of a Level I or Level II trigger being exceeded. The list of possible contingency measures in Illinois' contingency plan include the following:

Point Source Measures—

- NO_X SIP call Phase II (non-utility measures)
- Reinstatement of requirements for new source offsets and/or Lowest Achievable Emission Rates
- Apply RACT to smaller existing sources
- Tighten RACT for existing sources covered by Control Techniques Guidelines
- NO_X RACT
- Expand geographic coverage of current point source emission control measures
- Apply Maximum Available Control Technology for industrial sources
- Other point source measures to be identified

Mobile Source Measures —

- Transportation Control Measures, including, but not limited to, area-wide rideshare programs, telecommuting, transit improvements, and traffic flow improvements
- High-enhanced vehicle inspection/maintenance (OBDII)
- California engine standards
- Other mobile source measures to be identified

Area Source Measures—

- California architectural/industrial maintenance coating emission controls
- California commercial and consumer products coating emission controls
- Broader geographic applicability of existing emission control measures
- California off-road engine standards
- Other area source measures to be identified

Missouri's and Illinois' submittals adequately address the five basic components which comprise a maintenance plan (attainment inventory, maintenance demonstration, monitoring network, verification of continued attainment, and a contingency plan) and, therefore, satisfy the maintenance plan requirement.

f. Motor Vehicle Emissions Budgets

In addition to meeting the criteria for redesignation, as a control strategy SIP, the maintenance plans must contain motor vehicle emissions budgets that, in conjunction with emissions from all other sources, are consistent with attainment and maintenance. Illinois and Missouri developed MVEBs for the maintenance plan year of 2014. The MVEBs are for both VOC and NO_X, as precursors to ozone formation, and would be applicable for the St. Louis area upon the effective date of a MVEB adequacy finding.

A motor vehicle emissions budget is the total allowable VOC and NO_X

emissions allocated to highway and transit vehicle use during the maintenance period (highway and transit vehicle use emissions impacted by transportation plans would be projected to 2014 and tested against the 2014 motor vehicle emissions budget). The rules and requirements governing transportation conformity require certain transportation activities to be consistent with the motor vehicle emissions budgets contained in emission control SIPs (40 CFR 93.118). The projected emissions resulting from the transportation activities must be less than or equal to the emissions budget levels (40 CFR 93.118(a)). The review of the transportation plan impacts relative to the emissions budget will occur after EPA declares that the emissions budget meets the adequacy criteria of the transportation conformity rule under 40 CFR 93.118(e).

The motor vehicle emissions budgets for the St. Louis area were developed using emission factors generated through the use of EPA's MOBILE6 model. Inputs into this model were developed through coordinated efforts and review of a workgroup formed by representatives of the IEPA, MDNR, East-West Gateway Coordinating Council, Missouri Department of Transportation, Illinois Department of Transportation, and EPA.

EPA is proposing to find the MVEBs included in Missouri's and Illinois' maintenance plans adequate and is proposing to approve these budgets for conformity purposes. EPA believes that the MVEBs submitted by each state are consistent with the control measures identified in each SIP, and that each SIP, as a whole, demonstrates maintenance with the 1-hour ozone standard.

The 2014 motor vehicle emission budgets included in the states' maintenance plans are summarized in the table below:

ST. LOUIS AREA 2014 MOTOR VEHICLE EMISSION BUDGETS

[Emissions in tons per ozone season weekday]

State	VOC	NO_X
Illinois	10.13	18.72
Missouri	47.14	68.59

G. Where Is the Public Record and Where Do I Send Comments?

The official record for this proposed rule is located at the addresses in the **ADDRESSES** section at the beginning of this document. The addresses for sending comments are also provided in the **ADDRESSES** section at the beginning of this document. Public comments are solicited on EPA's proposed rulemaking action. Public comments received by March 3, 2003, will be considered in the development of EPA's final rulemaking action.

II. Statutory and Executive Order Reviews

Under Executive Order 12866 (58 FR 51735, October 4, 1993), this proposed action is not a ''significant regulatory action'' and therefore is not subject to review by the Office of Management and Budget. For this reason, this action is also not subject to Executive Order 13211, ''Actions Concerning Regulations That Significantly Affect Energy Supply, Distribution, or Use'' (66 FR 28355, May 22, 2001). This proposed action merely proposes to approve state law as meeting Federal requirements and imposes no additional requirements beyond those imposed by state law. Accordingly, the Administrator certifies that this proposed rule will not have a significant economic impact on a substantial number of small entities under the Regulatory Flexibility Act (5 U.S.C. 601 *et seq.*). Because this rule proposes to approve pre-existing requirements under state law and does not impose any additional enforceable duty beyond that required by state law, it does not contain any unfunded mandate or significantly or uniquely affect small governments, as described in the Unfunded Mandates Reform Act of 1995 (Public Law 104–4).

This proposed rule also does not have tribal implications because it will not have a substantial direct effect on one or more Indian tribes, on the relationship between the Federal Government and Indian tribes, or on the distribution of power and responsibilities between the Federal Government and Indian tribes, as specified by Executive Order 13175 (65 FR 67249, November 9, 2000). This action also does not have Federalism implications because it does not have substantial direct effects on the States, on the relationship between the national government and the States, or on the distribution of power and responsibilities among the various levels of government, as specified in Executive Order 13132 (64 FR 43255, August 10, 1999). This action merely proposes to approve a state rule implementing a Federal standard, and does not alter the relationship or the distribution of power and responsibilities established in the CAA. This proposed rule also is not subject to Executive Order 13045 ''Protection of Children from Environmental Health Risks and Safety Risks'' (62 FR 19885, April 23, 1997), because it is not economically significant.

In reviewing SIP submissions, EPA's role is to approve state choices, provided that they meet the criteria of the CAA. In this context, in the absence of a prior existing requirement for the State to use voluntary consensus standards (VCS), EPA has no authority to disapprove a SIP submission for failure to use VCS. It would thus be inconsistent with applicable law for EPA, when it reviews a SIP submission, to use VCS in place of a SIP submission that otherwise satisfies the provisions of the CAA. Thus, the requirements of section 12(d) of the National Technology Transfer and Advancement Act of 1995 (15 U.S.C. 272 note) do not apply. This proposed rule does not impose an information collection burden under the provisions of the Paperwork Reduction Act of 1995 (44 U.S.C. 3501 *et seq.*).

List of Subjects

40 CFR Part 52

Environmental protection, Air pollution control, Carbon monoxide, Incorporation by reference, Intergovernmental relations, Lead, Nitrogen dioxide, Ozone, Particulate matter, Reporting and recordkeeping requirements, Sulfur oxides, Volatile organic compounds.

40 CFR Part 81

Environmental protection, Air pollution control, National Parks, Wilderness areas.

Dated: January 13, 2003.

James Gulliford,

Regional Administrator, Region 7.

Dated: January 16, 2003.

Thomas V. Skinner,

Regional Administrator, Region 5.

[FR Doc. 03–1773 Filed 1–29–03; 8:45 am]

BILLING CODE 6560–50–P

Federal Register

Thursday,
January 30, 2003

Part IV

Securities and Exchange Commission

17 CFR Part 210

Retention of Records Relevant to Audits and Review; Final Rule

SECURITIES AND EXCHANGE COMMISSION

17 CFR Part 210

[Release Nos. 33–8180; 34–47241; IC–25911; FR–66; File No. S7–46–02]

RIN 3235–AI74

Retention of Records Relevant to Audits and Reviews

AGENCY: Securities and Exchange Commission.

ACTION: Final rule.

SUMMARY: We are adopting rules requiring accounting firms to retain for seven years certain records relevant to their audits and reviews of issuers' financial statements. Records to be retained include an accounting firm's workpapers and certain other documents that contain conclusions, opinions, analyses, or financial data related to the audit or review.

DATES: Effective Date: March 3, 2003. Compliance Date: Compliance is required for audits and reviews completed on or after October 31, 2003.

FOR FURTHER INFORMATION CONTACT: Samuel L. Burke, Associate Chief Accountant, D. Douglas Alkema, Professional Accounting Fellow, or Robert E. Burns, Chief Counsel, at (202) 942–4400, Office of the Chief Accountant, U.S. Securities and Exchange Commission, 450 Fifth Street, NW., Washington, DC 20549–1103.

SUPPLEMENTARY INFORMATION: We are adding rule 2–06 to Regulation S–X.

I. Executive Summary

As mandated by section 802 of the Sarbanes-Oxley Act of 2002 (''Sarbanes-Oxley Act'' or ''the Act''),[1] we are amending Regulation S–X to require accountants who audit or review an issuer's financial statements to retain certain records relevant to that audit or review. These records include workpapers and other documents that form the basis of the audit or review, and memoranda, correspondence, communications, other documents, and records (including electronic records), which are created, sent or received in connection with the audit or review, and contain conclusions, opinions, analyses, or financial data related to the audit or review. To coordinate with forthcoming auditing standards concerning the retention of audit documentation, the rule requires that these records be retained for seven years after the auditor concludes the audit or review of the financial statements, rather than the proposed period of five years from the end of the fiscal period in which an audit or review was concluded. As proposed,[2] the rule addresses the retention of records related to the audits and reviews of not only issuers' financial statements but also the financial statements of registered investment companies.

II. Discussion of Final Rule

Section 802 of the Sarbanes-Oxley Act[3] is intended to address the destruction or fabrication of evidence and the preservation of ''financial and audit records.''[4] We are directed under that section to promulgate rules related to the retention of records relevant to the audits and reviews of financial statements that issuers file with the Commission.

Section 802 states that the record retention requirements should apply to audits of issuers of securities to which section 10A(a) of the Securities Exchange Act of 1934 (''Exchange Act'') applies. The term ''issuer'' in this context is defined in section 10A(f) of the Exchange Act to include certain entities filing reports under that Act and entities that have filed and not withdrawn registration statements to sell securities under the Securities Act of 1933.[5] As adopted, the record retention requirements also apply to any audit or review of the financial statements of any registered investment company.[6] We believe that it is important for these record retention requirements, like our other record retention requirements, to apply consistently with respect to all registered investment companies, regardless of whether they fall within the periodic reporting requirements of the Exchange Act.[7]

Neither section 802 nor the final rule exempts auditors of foreign issuers'

[1] Pub. L. 107–204, 116 Stat. 745 (2002).

[2] These amendments were proposed in Securities Act Release No. 8151 (November 21, 2002) (the ''Proposing Release'') [67 FR 71017 (November 27, 2002)].

[3] Section 802 of the Sarbanes-Oxley Act, among other things, adds sections 1519 and 1520 to Chapter 73 of Title 18 of the United States Code. Section 1519 states, among other things, that anyone who knowingly alters, destroys, mutilates, conceals, covers up, falsifies, or makes a false entry in any record, document, or tangible object with the intent to impede, obstruct, or influence an investigation or proper administration of any matter within the jurisdiction of any department or agency of the United States or any case filed under the bankruptcy code, or in relation to or contemplation of any such matter or case, may be fined, imprisoned for not more than 20 years, or both.

Section 1520(a)(1) specifies that: ''Any accountant who conducts an audit of an issuer of securities to which section 10A(a) of the Securities Exchange Act of 1934 applies, shall maintain all audit or review workpapers for a period of 5 years from the end of the fiscal period in which the audit or review was concluded.'' Section 1520(a)(2) directs the Commission to promulgate, by January 26, 2003:

* * * such rules and regulations, as are reasonably necessary, relating to the retention of relevant records such as workpapers, documents that form the basis of an audit or review, memoranda, correspondence, communications, other documents, and records (including electronic records) which are created, sent, or received in connection with an audit or review and contain conclusions, opinions, analyses, or financial data relating to such an audit or review, which is conducted by an accountant who conducts an audit of an issuer of securities to which section 10A(a) of the Securities Exchange Act of 1934 (15 U.S.C. 78j–1(a)) applies. The Commission may, from time to time, amend or supplement the rules and regulations that it is required to promulgate under this section, after adequate notice and an opportunity for comment, in order to ensure that such rules and regulations adequately comport with the purposes of this section.

Section 1520 also provides that any person who knowingly and willfully violates subsection (a)(1), or any rule or regulation promulgated by the Securities and Exchange Commission under subsection (a)(2), may be fined, imprisoned for not more than 10 years, or both. It further provides that nothing in section 1520 shall be deemed to diminish or relieve any person of any other duty or obligation imposed by Federal or State law or regulation to maintain, or refrain from destroying, any document.

[4] Floor statement by Senator Leahy, 148 Cong. Rec. S7418 (July 26, 2002).

[5] Section 802 states that the record retention requirement applies to ''an audit of an issuer of securities to which section 10A(a) of the Securities Exchange Act of 1934 (15 U.S.C. 78j–1(a)) applies.'' Section 10A(a) of the Securities Exchange Act of 1934 (''Exchange Act'') states, ''Each audit required pursuant to this title of the financial statements of an issuer by an independent public accountant shall include'' designated procedures. Section 10A(f), which has been added to the Exchange Act by section 205(d) of the Sarbanes-Oxley Act, states: ''As used in this section the term ''issuer'' means an issuer (as defined in section 3 [of the Exchange Act]), the securities of which are registered under section 12, or that is required to file reports pursuant to section 15(d), or that files or has filed a registration statement that has not yet become effective under the Securities Act of 1933 (15 U.S.C. 77a *et seq.*), and that it has not withdrawn.'' Section 3(a)(8) of the Exchange Act, 15 U.S.C. 78c(a)(8), states that, with certain exceptions, an ''issuer'' is ''any person who issues or proposes to issue any security. * * *'' Accordingly, the definition of ''issuer'' includes entities that have filed and not withdrawn a registration statement for an initial public offering.

Because investment advisers and broker-dealers are not necessarily issuers, audits of their financial statements required for regulatory purposes are not subject to the rule. In other words, only the audits of the financial statements of investment advisers and broker-dealers meeting the definition of ''issuer'' in section 10A(f) are subject to the retention requirements in rule 2–06. One commenter suggested that investment advisers and broker-dealers be included within the scope of the rule. Letter from Lynette Downing, HLB Tautges Redpath, Ltd., dated December 27, 2002. Another commenter noted, however, that broadening some but not all rules under the Sarbanes-Oxley Act beyond ''issuers'' as defined in the Act would be confusing. Letter from Grant Thornton LLP dated December 27, 2002.

[6] *See* section 8 of the Investment Company Act of 1940, 15 U.S.C. 80a–8.

[7] *Cf.* rules 31a–1 and 31a–2 under the Investment Company Act of 1940, 17 CFR 270.31a–1 and 31a–2 (record-keeping and record-retention requirements for registered investment companies).

financial statements. Commenters, including the European Commission, noted that application of the rule to foreign auditors would place additional and differing layers of retention requirements on those firms.[8] However, none of the commenters identified any direct conflicts with foreign requirements.

The availability of documents under this rule will assist in the oversight and quality of audits of an issuer's financial statements. Increased retention of identified records also may provide critical evidence of financial reporting impropriety or deficiencies in the audit process. In light of these benefits, and absent a direct conflict with foreign requirements, the retention requirements are to apply equally to domestic and foreign accounting firms auditing the financial statements of foreign issuers. Issues raised by commenters regarding Public Company Accounting Oversight Board (''the Oversight Board'') oversight of foreign accounting firms and access by the SEC and the Oversight Board to the records retained by foreign accounting firms, as provided by Section 106 of the Sarbanes-Oxley Act, will be the subject of further discussion among staff, the Commission and the Oversight Board.[9]

In restricting the application of the rule to the audits and reviews of the financial statements of issuers and registered investment companies, we are not condoning more liberal document destruction policies for the audits and reviews of financial statements of other entities. For example, we would expect that auditors of the financial statements of those investment advisers, broker-dealers, and entities subject to Municipal Securities Rulemaking Board regulations that are not subject to the rule would retain relevant audit and review records consistent with applicable laws, regulations, and professional standards.

Documents To Be Retained

Paragraph (a) of rule 2–06 identifies the documents that must be retained and the time period for retaining those documents.[10] The final rule requires that the auditor[11] retain records relevant to the audit or review, including workpapers and other documents that form the basis of the audit or review of an issuer's financial statements, and memoranda, correspondence, communications, other documents, and records (including electronic records) that meet two criteria. The two criteria are that the materials (1) are created, sent or received in connection with the audit or review, and (2) contain conclusions, opinions, analyses, or financial data related to the audit or review.

Paragraph (a) of the proposed rule did not contain the phrase, ''records relevant to the audit or review.'' The proposal listed the records to be retained without a reference to the general notion of relevance to the audit or review. In response to commenters,[12] and to track more closely the wording in section 802,[13] we have added those words to the final rule.

In the Proposing Release, we stated that non-substantive materials that are not part of the workpapers, such as administrative records, and other documents that do not contain relevant financial data or the auditor's conclusions, opinions or analyses would not meet the second of the criteria in rule 2–06(a) and would not have to be retained. Commentators questioned whether the following documents would be considered substantive and have to be retained:

- Superseded drafts of memoranda, financial statements or regulatory filings,[14]
- Notes on superseded drafts of memoranda, financial statements or regulatory filings that reflect incomplete or preliminary thinking,[15]
- Previous copies of workpapers that have been corrected for typographical errors or errors due to training of new employees,[16]
- Duplicates of documents,[17] or
- Voice-mail messages.[18]

These records generally would not fall within the scope of new rule 2–06 provided they do not contain information or data, relating to a significant matter, that is inconsistent with the auditor's final conclusions, opinions or analyses on that matter or the audit or review.[19] For example, rule 2–06 would require the retention of an item in this list if that item documented a consultation or resolution of differences of professional judgment.

Commenters also questioned whether all of the issuer's financial information, records, databases, and reports that the auditor examines on the issuer's premises, but are not made part of the auditor's workpapers or otherwise currently retained by the auditor, would be deemed to be ''received'' by the auditor under rule 2–06(a)(1) and have to be retained by the auditor.[20] We do not believe that Congress intended for accounting firms to duplicate and retain all of the issuer's financial information, records, databases, and reports that might be read, examined, or reviewed by the auditor. Accordingly, we do not believe that the ''received'' criterion in rule 2–06(a)(1) requires that such records be retained.

Some commentators suggested that paragraph (a) of the proposed rule was overly broad and that the language in the rule, rather than following section 802 of the Sarbanes-Oxley Act, should conform to current auditing standards.[21] It would appear, however, that by requiring the retention of documents in addition to audit workpapers required by generally accepted auditing standards (''GAAS'') Congress has rejected this approach. Congress intended that accounting firms retain substantive materials that are relevant to

[8] Letter from the European Commission dated December 20, 2002; letter from PricewaterhouseCoopers dated December 27, 2002; letter from KPMG LLP dated December 27, 2002; letter from the American Institute of Certified Public Accountants dated December 27, 2002.

[9] We also note that this rule is not intended to expand or restrict the Commission's exisiting authority to investigate cross-border violations of the federal securities laws.

[10] Rule 2–06 is not intended to pre-empt or supersede any other federal or state record retention requirements.

[11] Rule 2–06 uses the term ''accountant,'' which is defined in rule 2–01(f)(1) of the Commission's auditor independence rules, 17 CFR 210.2–01(f)(1), to mean ''a certified public accountant or public accountant performing services in connection with an engagement for which independence is required. References to the accountant include any accounting firm with which the certified public or public accountant is affiliated.'' In a companion release, the Commission proposed to amend this definition to include the term ''registered public accounting firm.'' We will apply the definition in rule 2–01(f)(1), as amended, to rule 2–06.

[12] *See, e.g.,* letter from Deloitte & Touche dated December 27, 2002, and letter from McGladrey & Pullen dated December 31, 2002, which states, in part, ''The key to promulgating record retention rules that enhance audit quality lies in the word 'relevant'.''

[13] *See* note 3, *supra.*

[14] *See, e.g.,* letter from BDO Seidman, LLP, dated December 27, 2002; letter from Ernst & Young LLP, dated December 27, 2002; letter from PricewaterhouseCoopers dated December 27, 2002.

[15] *See* letter from BDO Seidman, LLP, dated December 27, 2002.

[16] *See* letter from Gelfond Hochstadt Pangburn, P.C. dated November 26, 2002.

[17] *See* letter from Ernst & Young LLP, dated December 27, 2002, and letter from Gelfond Hochstadt Pangburn, P.C. dated November 26, 2002.

[18] Letter from Sullivan & Cromwell dated December 26, 2002.

[19] Senator Leahy stated on the Senate floor, ''Non-substantive materials, however, which are not relevant to the conclusions or opinions expressed (or not expressed), need not be included in such retention regulations.'' 148 Cong. Rec. S7419 (July 26, 2002).

[20] *See, e.g.,* letter from PricewaterhouseCoopers dated December 27, 2002.

[21] *See, e.g.,* letter from BDO Seidman, LLP, dated December 27, 2002; letter from Deloitte & Touche dated December 27, 2002; letter from Ernst & Young LLP, dated December 27, 2002; letter from Grant Thornton LLP dated December 27, 2002; letter from KPMG LLP dated December 27, 2002. *See* the discussion of Statement on Auditing Standards No. 96, ''Audit Documentation,'' *infra.*

the review or audit of financial statements filed with the Commission and enumerated the records described in the rule as being relevant to audits and reviews. Narrowing the scope of the rule to conform to the current auditing literature would be contrary to the apparent congressional purpose embodied in section 802.

Time of Retention

The final rule states that records must be retained for seven years. We proposed that these materials be retained for five years after the end of the fiscal period in which an accountant audits or reviews an issuer's financial statements,[22] which is the period prescribed by section 802.[23] We also noted in the Proposing Release, however, that section 103 of the Sarbanes-Oxley Act directs the Oversight Board to require auditors to retain for seven years audit workpapers and other materials that support the auditor's conclusions in any audit report.[24] There may be fewer documents retained pursuant to section 103, which focuses more on workpapers that support the auditor's conclusions, than under section 802, which includes not only workpapers but also other documents that meet the criteria noted in this release. Many documents, however, may be covered by both retention requirements.[25]

Some commenters suggested that we adopt a uniform seven-year retention period,[26] while others indicated that the longer period would increase audit costs without any commensurate benefit.[27] We anticipate that most accounting firms, for administrative convenience, would retain all relevant materials for the longer of the two periods prescribed by the Commission and by the Oversight Board.[28] Incremental costs associated with requiring a seven-year retention period, therefore, should not be significant. We also believe that adopting a seven-year retention period would reduce inconsistencies between the forthcoming Oversight Board rules and the Commission's rules and lessen any potential confusion related to the calculation of retention periods.[29] Accordingly, the final rule requires that auditors retain the required documents for seven years from the conclusion of the audit or review.

Workpapers Defined

Section 802 is intended to require the retention of more than what traditionally has been thought of as auditor's ''workpapers.'' [30] To clarify the distinction between workpapers and other materials that would be retained, paragraph (b) of the final rule defines the term ''workpapers.'' The legislative history to section 802 states that the term is to be used as it is ''widely understood'' by the Commission and by the accounting profession.[31] We believe that the term is understood to refer to the documents required to be retained by GAAS.

GAAS does not use the specific term ''workpapers,'' [32] but Statement on Auditing Standards No. 96, ''Audit Documentation,'' states, in part:

> The auditor should prepare and maintain audit documentation, the content of which should be designed to meet the circumstances of the particular audit engagement. Audit documentation is the principal record of the auditing procedures applied, evidence obtained, and conclusions reached by the auditor in the engagement.[33]

We have placed the body of this provision into paragraph (b) and stated that ''workpapers'' means ''documentation of auditing or review procedures applied, evidence obtained, and conclusions reached by the accountant in the audit or review engagement, as required by standards established or adopted by the Commission or by the Public Company Accounting Oversight Board.'' [34] The proposed rule, therefore, recognizes that the Oversight Board, subject to Commission oversight, has the ability to review and change the nature and scope of the required documentation of procedures, evidence, and conclusions related to audits and reviews of financial statements.[35]

As noted by several commenters, there may be significant overlap of the documents falling within the definition of ''workpapers'' and the documents that would be retained pursuant to the description in paragraph (a) of the rule of ''other documents that form the basis of the audit or review, and memoranda, correspondence, communications, other documents, and records (including electronic records), which (1) are created, sent or received in connection with the audit or review, and (2) contain conclusions, opinions, analyses, or financial data related to the audit or review.'' [36]

Differences of Opinion

SAS 96 states that audit documentation serves mainly to provide the principal support for the auditor's report and to aid the auditor in the conduct and supervision of the audit.[37] Section 802, however, is intended to

[22] The proposed retention period was not based on the fiscal period covered by the financial statements being audited or reviewed, but when the audit or review would occur. For example, if a company has a calendar year-end fiscal year, for an audit of year 2002 financial statements that concludes in February or March 2003, under the proposal, the records would have been required to be retained until January 1, 2009.

[23] *See* Statement of Senator Leahy on the Senate floor: ''[I]t is intended that the SEC promulgate rules and regulations that require the retention of such substantive material * * * for such a period as is reasonable and necessary for effective enforcement of the securities laws and the criminal laws, most of which have a five-year statute of limitations.'' 148 Cong. Rec. S7419 (July 26, 2002).

[24] The Oversight Board is required under section 103(a)(2)(A)(i) of the Sarbanes-Oxley Act to adopt an auditing standard that requires accounting firms registered with the Oversight Board to ''* * * prepare, and maintain for a period of not less than 7 years, audit work papers, and other information related to any audit report, in sufficient detail to support the conclusions reached in such report.'' The standard to be adopted by the Oversight Board, therefore, is to be both a documentation and retention standard.

[25] *See, e.g.*, letter from KPMG LLP, dated December 27, 2002, which states, in part: ''Clearly, the documents to be retained under both Sections [103 and 802] overlap to a large extent.''

[26] *See, e.g.*, letter from Wendy Perez, President of California Board of Accountancy dated December 23, 2002; letter from Grant Thornton LLP dated December 27, 2002; letter from Lynette Downing, HLB Tautges Redpath, Ltd., dated December 27, 2002.

[27] *See, e.g.*, letter form Donald G. DeBuck, Controller, Computer Sciences Corporation dated December 26, 2002; letter from PricewaterhouseCoopers dated December 27, 2002; letter from the American Institute of Certified Public Accountants dated December 27, 2002.

[28] *See e.g.*, letter from Grant Thornton LLP dated December 27, 2002, which states, ''We believe that most firms will adopt a policy of retaining all audit documentation for the longer period of seven years.''

[29] *Id.*

[30] Senator Leahy stated on the Senate floor that section 802 ''requires the SEC to promulgate reasonable and necessary regulations * * * regarding the retention of categories of electronic and non-electronic audit records, which contain opinions, conclusions, analysis or financial data, in addition to the actual work papers.'' 148 Cong. Rec. S7418 (July 26, 2002).

[31] Statement by Senator Leahy on the Senate floor, 148 Cong. Rec. S7418 (July 26, 2002).

[32] American Institute of Certified Public Accountants (''AICPA''), Statement on Auditing Standards No. (''SAS'') 96, ''Audit Documentation,'' at footnote 1, however, acknowledges that: ''*Audit Documentation* also may be referred to as *working papers*''; Codification of Statements on Auditing Standards (''AU'') § 339.

[33] SAS 96, at ¶ 1; AU § 339.01. This paragraph also states: ''The quality, type, and content of audit documentation are matters of the auditor's professional judgment.'' The rule does not include this sentence, but instead notes that the Commission or the Oversight Board may reexamine these requirements in the auditing standards.

[34] Prior to the establishment or adoption of auditing standards by the Oversight Board, ''workpapers'' would continue to mean the documentation of auditing or review procedures applied, evidence obtained, and conclusions reached by the accountant in the audit or review engagement as required by GAAS.

[35] *See* section 103(a) of the Sarbanes-Oxley Act.

[36] *See, e.g.*, letter from PricewaterhouseCoopers dated December 27, 2002.

[37] SAS 96, at ¶ 3; AU § 339.03.

facilitate effective enforcement of the securities laws and criminal laws,[38] which requires the retention of not only records that *support* the auditor's report (as required by SAS 96) but also records that would be inconsistent with, or otherwise challenge, the conclusions in the auditor's report. In order to ensure that the purposes of the Act are fulfilled, we proposed that paragraph (c) of the rule include the specific requirement that the materials retained under paragraph (a) would include not only those that support an auditor's conclusions about the financial statements but also those materials that may ''cast doubt'' on those conclusions.[39] We stated in the Proposing Release that paragraph (c) was intended to ensure the preservation of those records that reflect differing professional judgments and views (both within the accounting firm and between the firm and the issuer) and how those differences were resolved. To better communicate what we intended by ''cast doubt'' on the auditor's conclusions, we included in the proposed rule the example of documentation of differences of opinion concerning accounting and auditing issues.

The auditor in a variety of contexts may create materials related to differences of opinion. For example, SAS No. 22, ''Planning and Supervision,'' states in part:

> The auditor with final responsibility for the audit and assistants should be aware of the procedures to be followed when differences of opinion concerning accounting and auditing issues exist among firm personnel involved in the audit. Such procedures should enable an assistant to document his disagreement with the conclusions reached if, after appropriate consultation, he believes it necessary to disassociate himself from the resolution of the matter. In this situation, the basis for the final resolution should also be documented.[40]

An interpretation of this section issued by the AICPA's Auditing Standards Board emphasizes the professional obligation on each person involved in an audit engagement to bring his or her concerns to the attention of others in the firm and, as appropriate, to document those concerns. This interpretation states:

> Accordingly, each assistant has a professional responsibility to bring to the attention of appropriate individuals in the firm, disagreements or concerns the assistant might have with respect to accounting and auditing issues that he believes are of significance to the financial statements or auditor's report, however those disagreements or concerns may have arisen. In addition, each assistant should have a right to document his disagreement if he believes it is necessary to disassociate himself from the resolution of the matter.[41]

In addition, SAS 96 states that the documentation for an audit should include the findings or issues that in the auditor's judgment are significant, the actions taken to address them (including any additional evidence obtained), and the basis for the final conclusions reached.[42] For example, if a memorandum is prepared by a member of a large accounting firm's national office that is critical of the accounting used by an audit client, or of a position taken by the partner in charge of the audit of those financial statements, that memorandum should be retained.[43] Another example would be documentation related to an auditor's communications with an issuer's audit committee about alternative disclosures and accounting methods used by the issuer that are not the disclosures or accounting preferred by the auditor.[44]

We continue to believe that retaining any materials that might cast doubt on the final conclusions reflected in the auditor's report, including those created under SAS 22 and SAS 96, would be consistent with the letter and spirit of the Sarbanes-Oxley Act. One commenter, the National Association of State Boards of Accountancy (''NASBA''), endorsed requiring the retention of documents that ''cast doubt'' on an auditor's audit or review because ''state attorneys' general staff members assigned to accountancy boards often have complained of receiving only those documents that support the final report.'' NASBA also noted, however, that the Commission promptly should revise the rule if it becomes too burdensome or otherwise unworkable.[45]

Several commentators stated that the proposed ''cast doubt'' language was unworkable. They indicated that the phrase was pejorative,[46] vague and unnecessary, and might be used to attribute doubt to virtually any remark made during an audit, regardless of its relevance or materiality.[47] One accounting firm stated that the proposed rule ''could be read to require retention of every document reflecting an error however temporary—even typographical or addition errors made in preparing a workpaper. * * * It also could be read to require preservation of each and every exchange of differing views on any topic, however fleeting and trivial the differences.'' [48] Another accounting firm stated that on many occasions correcting or redoing workpapers is not the result of differences of opinion but from on-the-job training and a normal learning

[38] *See* Statement of Senator Leahy on the Senate floor, 148 Cong. Rec. S7419 (July 26, 2002).

[39] *Senator Leahy stated on the Senate floor:*

> In light of the apparent massive document destruction by Andersen, and the company's apparently misleading document retention policy, even in light of its prior SEC violations, it is intended that the SEC promulgate rules and regulations that require the retention of such substantive material, including material that casts doubt on the views expressed in the audit or review, for such a period as is reasonable and necessary for effective enforcement of the securities laws and the criminal laws, most of which have a five-year statute of limitations.

148 Cong. Rec. S7419 (July 26, 2002).

[40] SAS 22, ¶ 22 (as amended by SAS 47, 48 and 77); AU § 311.22. ''Assistants,'' in the context of the first sentence of the quoted paragraph, is intended to include other partners who are on the audit engagement team.

[41] ''Planning and Supervision: Auditing Interpretations of Section 311,'' AU § 9311.37. ''Assistants,'' in the context of this interpretation, includes other partners who are on the audit engagement team.

[42] SAS 96, ¶ 9; AU § 339.09, which states:

> In addition, the auditor should document findings or issues that in his or her judgment are significant, actions taken to address them (including any additional evidence obtained), and the basis for the final conclusions reached.

See also, SAS 96, ¶ 6; AU § 339.06, which states:

> Audit documentation should be sufficient to (a) Enable members of the engagement team with supervision and review responsibilities to understand the nature, timing, extent, and results of auditing procedures performed, and the evidence obtained; (b) indicate the engagement team member(s) who performed and reviewed the work; and (c) show that the accounting records agree or reconcile with the financial statements or other information being reported on.

[43] Such a memorandum might be prepared in connection with the consultation process that is part of an accounting firm's quality controls. *See, e.g.,* section 103(a)(2)(B)(ii) of the Sarbanes-Oxley Act.

[44] Section 204 of the Sarbanes-Oxley Act adds section 10A(k) to the Exchange Act and requires auditors to report certain matters to audit committees, including: ''(a) All critical accounting policies and practices to be used, (2) all alternative treatments of financial information within generally accepted accounting principles that have been discussed with management officials of the issuer, ramifications of the use of such alternative disclosures and treatments, and the treatment preferred by the registered public accounting firm; and (3) other material written communications between the registered public accounting firm and the management of the issuer, such as the management letter or schedule of unadjusted differences.''

[45] Letter from K. Michael Conaway, Chair, NASBA, and David A. Costello, President and CEO, NASBA, dated December 23, 2002.

[46] Letter from Donald G. DeBuck, Computer Sciences Corporation, dated December 26, 2002.

[47] *See, e.g.,* letter from BDO Seidman, LLP, dated December 27, 2002; letter from Grant Thornton LLP dated December 27, 2002; letter from KPMG LLP dated December 27, 2002; letter from Deloitte & Touche LLP dated December 27, 2002.

[48] Letter from Ernst & Young LLP, dated December 27, 2002.

process.[49] One commenter stated that the ''cast doubt'' language in the proposed rule might deter auditors from asking legitimate questions.[50]

Some commenters suggested language to replace the provision in subparagraph (c) that documents be retained if they ''cast doubt on the final conclusions reached by the auditor.'' For example, commenters suggested that records be retained only if they would constitute a reportable ''disagreement'' under Item 304 of Regulation S–K.[51] Item 304 indicates that a disagreement is reportable upon a change in an entity's principal accountant if, among other things, the disagreement occurs at the decision-making level on any matter of accounting principles or practices, financial statement disclosure, or auditing scope or procedure, which, if not resolved to the accountant's satisfaction, would cause the auditor to make reference to the matter in connection with his or her audit report.[52]

We are reluctant, however, to follow Item 304 of Regulation S–K, which has a different purpose than the rule being adopted in this release. Item 304 requires disclosure to investors of potential ''opinion shopping'' situations and provides a forum for the registrant, the newly engaged auditor, and the former auditor to provide their views of ''disagreements'' and other ''reportable events.'' New rule 2–06, on the other hand, addresses the retention of documents relevant to enforcement of the securities laws, Commission rules, and criminal laws.

In the proposing release we asked if, in place of the ''cast doubt'' language, a different test for retention of documents would be appropriate. We specifically asked if such a test should be documentation of ''significant differences in professional judgment'' or ''differences of opinion on issues that are material to the issuer's financial statements or to the auditor's final conclusions regarding any audit or review.'' Several commenters supported using one or a combination of these tests.[53]

In consideration of the comments received, we have revised paragraph (c) of the rule. We have removed the phrase ''cast doubt'' to reduce the possibility that the rule mistakenly would be interpreted to reach typographical errors, trivial or ''fleeting'' matters, or errors due to ''on-the-job'' training. We continue to believe, however, that records that either support or contain significant information that is inconsistent with the auditor's final conclusions would be relevant to an investigation of possible violations of the securities laws, Commission rules, or criminal laws and should be retained. Paragraph (c), therefore, now provides that the materials described in paragraph (a) shall be retained whether they support the auditor's final conclusions or contain information or data, relating to a significant matter, that is inconsistent with the final conclusions of the auditor on that matter or on the audit or review. Paragraph (c) also states that the documents and records to be retained include, but are not limited to, those documenting consultations on or resolutions of differences in professional judgment.

The reference in paragraph (c) to ''significant'' matters is intended to refer to the documentation of substantive matters that are important to the audit or review process or to the financial statements of the issuer or registered investment company.[54] Rule 2–06(c) requires that the documentation of such matters, once prepared, must be retained even if it does not ''support'' the auditor's final conclusions, because it may be relevant to an investigation.[55] Similarly, the retention of records regarding a consultation about, and resolution of, differences in professional judgment would be relevant to such an investigation and must be retained. We intend for Rule 2–06 to be incremental to, and not to supersede or otherwise affect, any other legal or procedural requirement related to the retention of records or potential evidence in a legal, administrative, disciplinary, or regulatory proceeding.

Finally, we recognize that audits and reviews of financial statements are interactive processes and views within an accounting firm on accounting, auditing or disclosure issues may evolve as new information or data comes to light during the audit or review. We do not view ''differences in professional judgment'' within subparagraph (c) to include such changes in preliminary views when those preliminary views are based on what is recognized to be incomplete information or data.

Response to Other Significant Comments

In response to our request in the Proposing Release, commenters addressed whether issuers and registered investment companies should be required to retain documents that the auditor examines, reviews or otherwise considers during the audit or review but are not made part of the auditor's records. Commenters generally opposed such a requirement.[56] One commenter indicated that it was unclear whether section 802 of the Sarbanes-Oxley Act applies to such records and that, if such a requirement was imposed, it would go beyond those documents that are relevant to the audit or review or that contain the auditor's conclusions, opinions, or analyses.[57] An accounting firm similarly stated that it was not practical for an issuer to keep track of the documents examined by the auditor and then apply the retention

[49] Letter from Donald D. Pangburn, Director, Gelfond Hochstadt Pangburn, P.C., dated November 26, 2002.

[50] Letter from Sullivan & Cromwell dated December 26, 2002.

[51] *See, e.g.*, letter from Ernst & Young LLP, dated December 27, 2002; letter from PricewaterhouseCoopers dated December 27, 2002; letter from Deloitte & Touche dated December 27, 2002.

[52] Item 304 of Regulation S–K, 17 CFR 229.304.

[53] *See, e.g.*, letter from Sullivan & Cromwell dated December 26, 2002; letter from Lynette Downing, HLB Tautges Redpath, Ltd. dated December 27, 2002; letter from Grant Thornton LLP dated December 27, 2002; letter from KPMG LLP dated December 27, 2002; letter from the American Institute of Certified Public Accountants dated December 27, 2002.

[54] SAS 96 requires the auditor to document findings or issues that in his or her judgment are significant. It states that ''significant audit findings or issues'' include:

- ''Matters that both (a) are significant and (b) involve issues regarding the appropriate selection, application, and consistency of accounting principles with regard to the financial statements, including related disclosures. Such matters often relate to (a) accounting for complex or unusual transactions or (b) estimates and uncertainties and, if applicable, the related management assumptions.
- ''Results of auditing procedures that indicate that (a) the financial statements or disclosures could be materially misstated or (b) auditing procedures need to be significantly modified.
- ''Circumstances that cause significant difficulty in applying auditing procedures that the auditor considered necessary.
- ''Other findings that could result in modification of the auditor's report.'' SAS 96, ¶ 9, AU § 339.09 (Footnote omitted.)

This literature may provide helpful guidance as to the scope of the term ''significant.'' However, the term significant as used in this rule is not limited to items identified in SAS 96. Moreover, we do not intend for the auditor's subjective judgment of whether a matter is significant to be determinative. Instead, we believe that the more objective test of what may be significant to a reasonable investor should be applied in evaluating whether information is ''significant.''

[55] *See* letter from Deloitte & Touche dated December 27, 2002, *quoting* Statement of Senator Orrin Hatch before the Senate Judiciary Committee (April 25, 2002): ''I anticipate that the SEC will exercise its discretion to promulgate only those rules and regulations that are necessary to ensure that documents material to an audit or review, as well as any future investigation, are retained.''

[56] One commenter supported such a requirement. Letter from Lynette Downing, HLB Tautges Redpath, Ltd. dated December 27, 2002.

[57] Letter from Sullivan & Cromwell dated December 26, 2002.

requirements to those documents.[58] An issuer commented that, due to the host of documents, databases, and other material provided to an auditor, it is impossible for an issuer to determine what, if any, documents provided to the auditor were relevant to the auditor or provided the basis for the auditor's conclusions.[59] Accordingly, we are not instituting such a requirement at this time.

We also requested comments on whether a transition period was necessary or appropriate in implementing the rule. Accounting firms[60] and a law firm[61] noted that time may be required to develop systems related to the retention of documents (particularly electronic documents) and to train people to use them. Accordingly, we have indicated in the beginning of this release that accounting firms should comply with the rule no later than October 31, 2003.

Several items were raised in the comment letters that may be addressed more appropriately by the Public Company Accounting Oversight Board. For example, one commenter suggested that the Commission adopt the standard promulgated by the General Accounting Office, or a previously proposed draft auditing standard, related to the form and content of audit workpapers.[62] This commenter also suggested that the Commission adopt standards requiring accounting firms to: Document differences of opinion on issues that are material to the audit; have written documentation and destruction policies; document significant relationships regarding the auditor and issuer; and have auditors performing audit or review work related to the issuer's subsidiaries or foreign affiliates document all work performed and certify in writing that such documentation is complete and available for inspection.[63] These matters are more appropriately within the purview of setting auditing standards and should be addressed, in the first instance, by the Oversight Board.[64]

The same commenter suggested that the Commission provide that if audit work is not documented in the workpapers then the burden of proof shifts to the auditor to prove by a preponderance of evidence that the work in fact was performed.[65] We note that the retention requirements under SAS 96, as discussed above, and new rule 2–06 should provide documentation of all significant matters considered during the audit. If such work is performed but not documented, the auditor generally would violate GAAS or new rule 2–06.

Another commenter suggested that the Commission require that all accounting firms registered with the Public Company Accounting Oversight Board comply with consultation requirements, and related documentation requirements, currently prescribed by the SEC Practice Section of the American Institute of Certified Public Accountants for large accounting firms.[66] We believe these matters relate to quality control standards within the scope of the Oversight Board's standard setting authority and we encourage the Oversight Board to consider adoption of such requirements. This commenter also suggested that the Commission address the application of rule 2–06 to documents prepared for a firm's internal inspection or outside peer review.[67] Such documents generally would not be considered to be created, sent or received in connection with an audit or review engagement and, therefore, would not be within the new rule. We would encourage the Oversight Board to consider, however, whether there are circumstances in which certain of the records prepared for inspection purposes may be considered part of the audit or review workpapers.

III. Paperwork Reduction Act

Certain provisions of rule 2–06 contain ''collections of information'' requirements within the meaning of the Paperwork Reduction Act of 1995 (''PRA'') (44 U.S.C. 3501 *et seq.*), and the Commission submitted them to the Office of Management and Budget (''OMB'') for review in accordance with 44 U.S.C. 3507(d) and 5 CFR 1320.11. The title for the collection of information is ''Regulation S–X—Record Retention.'' The request for approval of the rule's collection of information requirements is pending at OMB.

An agency may not conduct or sponsor, and a person is not required to respond to, a collection of information unless it displays a currently valid control number. Compliance with the proposed requirements would be mandatory. Rule 2–06 requires that accounting firms retain certain records for seven years. Retained information would be kept confidential unless or until made public during an enforcement, disciplinary or other legal or administrative proceeding.

The final rule, which is included in Regulation S-X, requires accountants to retain certain records for a period of seven years after the accountant concludes an audit or review of an issuer's or registered investment company's financial statements. The proposed rules do not require accounting firms to create any new records. It also is important to note that decisions about the retention of records currently are made as a part of each audit or review.

The records to be retained include records relevant to the audit or review, including workpapers and other documents that form the basis of the audit or review, and memoranda, correspondence, communications, other documents, and records (including electronic records), which are created, sent or received in connection with the audit or review, and contain conclusions, opinions, analyses, or financial data related to the audit or review. Records described in the rule are to be retained whether the conclusions, opinions, analyses, or financial data in the records support the final conclusions reached by the auditor, or contain information or data, relating to a significant matter, that is inconsistent with the final conclusions of the auditor on that matter or the audit or review. The required retention of audit and review records should discourage the destruction, and assist in the availability, of records that may be relevant to investigations conducted and litigation brought under the securities laws, Commission rules or criminal laws.

In the proposing release, we estimated that approximately 850 accounting firms audit and review the financial statements of approximately 20,000 public companies and registered

[58] Letter from BDO Seidman, LLP dated December 27, 2002. See also letter from the American Institute of Certified Public Accountants dated December 27, 2002.

[59] Letter from Mr. Donald G. DeBuck, Computer Sciences Corporation, dated December 26, 2002.

[60] *See, e.g.*, letter from BDO Seidman, LLP dated December 27, 2002 and letter from KPMG LLP dated December 27, 2002.

[61] Letter from Sullivan & Cromwell dated December 26, 2002.

[62] Letter from Wendy S. Perez, President, California Board of Accountancy, dated December 23, 2002.

[63] *Id.*

[64] Sections 103(a) and 103(c) of the Sarbanes-Oxley Act empower the Oversight Board to establish auditing standards, including, to the extent it determines appropriate, adopting standards proposed by professional groups of accountants or by expert advisory groups convened by the Oversight Board.

[65] *Id.*

[66] Letter from BDO Seidman, LLP dated December 27, 2002. *See* Section 1000.08(q) of the SECPS membership requirements. This section requires large firms to have policies on internal consultations and to document: the matter, the action taken to address the matter, and the basis for the final conclusion reached. Under this provision, the auditor must either follow the position taken by the person consulted or appeal any disagreement to a higher level of authority within the firm for ultimate resolution.

[67] *Id.*

investment companies filing financial statements with the Commission.[68] Each firm currently is required to perform its audits and reviews in accordance with generally accepted auditing standards (''GAAS''), which require auditors to retain certain documentation of their work.[69] Accounting firms, therefore, currently make decisions about the retention of each record created during the audit or review. GAAS, however, currently does not require explicitly that auditors retain documents that do not support their opinions and GAAS does not set definite retention periods. As a result, rule 2–06 might result in the retention of more records than currently required under GAAS, and might result in some accounting firms keeping those records for a longer period of time.

To cover all increases in burden hours, we estimated in the proposing release that, on average, the incremental burden on firms would be no more than one hour for each public company audit client, or approximately 15,000 hours.[70]

We received comments on the proposed collection of information requirements indicating that, in view of the possible breadth of the proposed rule, the estimated burden hours appeared to be low.[71] These commenters suggested that this burden would be mitigated by revising the portion of the proposed rule related to the retention of records that ''cast doubt'' on the final conclusions reached by the auditor on the audit or review.[72] In view of the revisions made to the rule and the clarifications in this release provided in response to commenters' concerns, we believe that the estimated burden is reasonable.

IV. Cost—Benefit Analysis

The record retention requirements in rule 2–06 implement a congressional mandate. We recognize that any implementation of the Sarbanes-Oxley Act likely will result in costs as well as benefits and will have an effect on the economy. We are sensitive to the costs and benefits imposed by our rules and, in the Proposing Release, we identified certain costs and benefits of the proposed rule.

A. Background

Under section 802 of the Sarbanes-Oxley Act, accountants who audit or review an issuer's financial statements must retain certain records relevant to that audit or review. Rule 2–06 implements this provision and indicates the records to be retained, but it does not require accounting firms to create any new records.

The records to be retained would include those relevant to the audit or review, including workpapers and other documents that form the basis of the audit or review and memoranda, correspondence, communications, other documents, and records (including electronic records), which are created, sent or received in connection with the audit or review, and contain conclusions, opinions, analyses, or financial data related to the audit or review. Records described in the rule would be retained whether the conclusions, opinions, analyses, or financial data in the records support the final conclusions reached by the auditor, or contain information or data, relating to a significant matter, that is inconsistent with the final conclusions of the auditor on that matter or the audit or review. The required retention of audit and review records should discourage the destruction, and assist in the availability, of records that may be relevant to investigations conducted under the securities laws, Commission rules or criminal laws.

B. Potential Benefits of the Retention Requirements

Rule 2–06 requires that accountants retain certain records relevant to an audit or review of an issuer's or registered investment company's financial statements for seven years. To the extent that the rule increases the availability of documents beyond current professional practices, the rule may benefit investigations and litigation conducted by the Commission and others. Increased retention of these records will preserve evidence reflecting significant accounting judgments and may provide important evidence of financial reporting improprieties or deficiencies in the audit process.

One of the most important factors in the successful operation of our securities markets is the trust that investors have in the reliability of the information used to make voting and investment decisions. In addition to providing materials for investigations, the availability of the documents subject to rule 2–06 might facilitate greater oversight of audits and improved audit quality, which, in turn, ultimately could increase investor confidence in the reliability of reported financial information.

C. Potential Costs of the Proposal

In the proposing release, we estimated that approximately 850 accounting firms audit and review the financial statements of approximately 20,000 public companies and registered investment companies filing financial statements with the Commission.[73] Each firm currently is required to perform its audits and reviews in accordance with generally accepted auditing standards (''GAAS''), which require auditors to retain certain documentation of their work.[74] Accounting firms, therefore, currently make decisions about the retention of each record created during the audit or review. GAAS explicitly requires that auditors retain documents that support their audit reports, but it does not set definite retention periods. As noted above, to ensure the purposes of the Act are achieved, the final rule requires the retention of materials that not only support the auditor's report but also records that are inconsistent with that report, and sets a seven-year retention period. As a result, rule 2–06 might result in the retention of more records than currently required under GAAS, and might result in some accounting firms keeping those records for a longer period of time.

It is important to note, however, that the proposed rules do not require the creation of any record; they require only that existing records be maintained for the prescribed time period. It also is important to note that decisions about

[68] These estimates are based on information in Commission databases. The number of public companies includes those filing annual reports and those filing registration statements to conduct initial public offerings. The same auditors also audit the financial statements of approximately 5,587 investment companies.

[69] *See* American Institute of Certified Public Accountants (''AICPA''), Statement on Auditing Standards No. (''SAS'') 96, ''Audit Documentation'; Codification of Statements on Auditing Standards (''AU'') 339. GAAS does not specify a required retention period. The documents to be retained under SAS 96 include those indicating the auditing procedures applied, the evidence obtained during the audit, and the conclusions reached by the auditor in the engagement.

[70] This burden accounts for incidental reading and implementation of the rule. Fifteen thousand burden hours should be sufficient to cover the audits and reviews of not only public companies but also registered investment companies. Because of the nature and scope of the audits of investment companies, there would be an even smaller and insignificant incremental burden imposed on those audits than on the audits of public companies.

[71] *See* letter from Lynette Downing, HLB Tautges Redpath, Ltd. dated December 27, 2002; letter from PricewaterhouseCoopers dated December 27, 2002; letter from Deloitte & Touche dated December 27, 2002.

[72] *See* letter from PricewaterhouseCoopers dated December 27, 2002 and letter from Deloitte & Touche dated December 27, 2002.

[73] These estimates are based on information in Commission databases. The number of public companies includes those filing annual reports and those filing to conduct an initial public offering. The same auditors also audit the financial statements of approximately 5,587 investment companies.

[74] *See* American Institute of Certified Public Accountants (''AICPA''), Statement on Auditing Standards No. (''SAS'') 96, ''Audit Documentation'; Codification of Statements on Auditing Standards (''AU'') 339.

the retention of records currently are made as a part of each audit or review.

In the proposing release, we estimated that adoption of the rule would not result in any significant increase in costs for accounting firms or issuers because the rule would not require the creation of records, would not significantly increase procedures related to the review of documents, and minimal, if any, work would be associated with the retention of these records. We indicated that the disposal of those records, which would occur in any event, merely would be delayed. In addition, because an already large and ever-increasing portion of the records required to be retained are kept electronically, we stated that the incremental increase in storage costs for documents would not be significant for any firm or for any single audit client. We recognize, however, that firms may incur some cost to retain access to older technologies as electronic storage technology advances.

For purposes of the Paperwork Reduction Act, we estimated in the proposing release the total burden to be 15,000 burden hours. We further estimated that, assuming an accounting firm's average cost of in-house staff is $110 per hour,[75] the total cost would be $1,650,000.

We received comments indicating that, based on the proposed rule, our cost estimate was low. Due to revisions made to the rule the cost estimates provided by the commenters, however, may no longer be accurate. For example, a large accounting firm stated that if it would be required to retain all financial data ''received'' from the issuer in the course of the audit, its current document retention costs of approximately $4.5 million would double.[76] This firm questioned whether all of the issuer's financial information, records, databases, and reports that the auditor examines on the issuer's premises, but are not made part of the auditor's workpapers or otherwise retained by the auditor, would be deemed to be ''received'' by the auditor and subject to the retention requirements in rule 2–06. As noted previously in this release, we do not believe that Congress intended for accounting firms to duplicate and retain all of the issuer's financial information, records, databases, and reports that might be read, examined, or reviewed by the auditor. Accordingly, we do not believe that the ''received'' criterion in rule 2–06(a)(1) requires that auditors retain such records and the firm's anticipated document retention costs, therefore, should be significantly reduced.

Another accounting firm indicated that administrative costs of retaining records, based on the proposed rule, could include a one-time cost of $1 million and ongoing annual costs of $500,000 to $1 million.[77] This firm also estimated that increased litigation costs associated with complying with discovery requests and payment of damages would increase annual audit costs by at least five percent and perhaps as much as fifteen to twenty percent.[78] As noted above, we believe that revisions to the rule in response to commenters' concerns should lessen the administrative costs anticipated by this commenter. Regarding the commenter's cost estimates related to potential litigation, we recognize that one purpose of section 802 is to facilitate investigations of potential violations of securities laws and criminal laws,[79] which could impact a firm's litigation costs. Nonetheless, the firm's estimate would appear to be speculative. If the retention requirements lead to more efficient oversight of the accounting profession then they may result in improved audit quality and enhanced investor confidence in the profession.

Other accounting firms noted that many variables would affect the costs related to the rule, and that the ultimate increase in costs is difficult to quantify.[80] One commenter indicated that the amount of changes to be made to current record retention systems, and the related costs, depends on whether the accounting firm has a good record management system already in place.[81] For those firms with established records management programs, this commenter indicated that the rule would require a review and possibly fine-tuning of the firms' existing policies and procedures. This commenter also noted that adopting the proposed five-year retention requirement would have been more costly than adopting the seven-year retention requirement that is consistent with the forthcoming auditing standard to be promulgated by the Public Company Accounting Oversight Board. In this commenter's view, having two retention periods would have increased costs associated with processing the records.[82]

V. Consideration of Impact on the Economy, Burden on Competition, and Promotion of Effeciency, Competition, and Capital Formation

Section 23(a)(2) of the Exchange Act[83] requires the Commission, when adopting rules under the Exchange Act, to consider the anti-competitive effects of any rule it adopts. In addition, Section 2(b) of the Securities Act of 1933,[84] Section 3(f) of the Exchange Act,[85] and Section 2(c) of the Investment Company Act[86] require the Commission, when engaging in rulemaking that requires it to consider or determine whether an action is necessary or appropriate in the public interest, to consider whether the action will promote efficiency, competition, and capital formation.

We believe that rule 2–06 would not have an adverse impact on competition. To the extent the proposed rules would increase the quality of audits and the efficiency of enforcement and disciplinary proceedings, there might be an increase in investor confidence in the efficacy of the audit process and the efficiency of the securities markets.

One commenter agreed that the rule should have no adverse effect on competition.[87] This commenter also noted that those firms with good records management systems should have more efficient services and more secure information.[88]

In any event, to the extent the rule has any anti-competitive effect, or impacts efficiency, competition, or capital formation, we believe those effects are necessary and appropriate in

[75] We estimate that associates would perform three-fourths of the required work, with a partner performing about one-fourth of the work. We also estimate that, on average, an associate's annual salary would be approximately $125,000 and a partner's annual compensation would be approximately $500,000. Based on these amounts, the in-house cost of an associate's time would be approximately $65 per hour, and the in-house cost of a partner's time would be approximately $250 per hour. The average hourly rate, therefore, would be about $110 per hour ([(3 × $65) + $250] / 4).

[76] Letter from PricewaterhouseCoopers dated December 27, 2002.

[77] Letter from BDO Seidman, LLP dated December 27, 2002.

[78] *Id.*

[79] *See* Statement of Senator Leahy on the Senate floor: ''[I]t is intended that the SEC promulgate rules and regulations that require the retention of such substantive material * * * for such a period as is reasonable and necessary for effective enforcement of the securities laws and the criminal laws.* * *'' 148 Cong. Rec. S7419 (July 26, 2002).

[80] *See, e.g.*, letter from Grant Thornton, dated December 27, 2002.

[81] Letter from Lynette Downing, HLB Tautges Redpath, Ltd., dated December 27, 2002. This commenter estimated that, depending on the information systems and staff currently in place, to maintain electronic records ''an investment of $100,000 to $250,000 for each $5 million in net fees is likely with ongoing annual expenses of $50,000 to $100,000.''

[82] *Id.*

[83] 15 U.S.C. 78w(a)(2).

[84] 15 U.S.C. 77b(b).

[85] 15 U.S.C. 78c(f).

[86] 15 U.S.C. 80a–2(c).

[87] Letter from Lynette Downing, HLB Tautges Redpath, Ltd., dated December 27, 2002.

[88] *Id.*

furtherance of the goals of implementing section 802 of the Sarbanes-Oxley Act.

We received no comments indicating that the rule would impact efficiency or capital formation.

VI. Final Regulatory Flexibility Act Analysis

This Final Regulatory Flexibility Act Analysis has been prepared in accordance with 5 U.S.C. 604. It relates to new rule 2–06 of Regulation S–X, which requires auditors to retain certain audit and review documentation.

A. Reasons for and Objectives of the New Rule

The rule generally carries out a congressional mandate. The rule, in general, prohibits the destruction for seven years of certain records related to the audit or review of an issuer's or registered investment company's financial statements.[89] The rule, however, would not require accounting firms to create any new records.

The objective of the rule is to implement section 802 of the Sarbanes-Oxley Act in order to increase investor confidence in the audit process and in the reliability of reported financial information. This is accomplished by defining the records to be retained related to an audit or review of an issuer's financial statements. Having these records available should enhance oversight of corporate reporting and of the performance of auditors and facilitate the enforcement of the securities laws.

B. Significant Issues Raised by Public Comments

One commenter anticipated that the record retention requirements, if adopted as proposed, would have placed an ''enormous'' burden on small accounting firms, and could have resulted in some firms deciding to no longer audit public companies.[90] The final rule, however, contains several revisions designed to lower the costs on all firms, including smaller accounting firms. These revisions include removing the ''cast doubt'' language from the rule, which commenters generally viewed as requiring the auditor to retain virtually all documents generated or reviewed during an audit or review, regardless of their relevance or materiality.[91] We have replaced this language with language that focuses on documents that contain information or data relating to a significant matter that are inconsistent with the auditor's final conclusions regarding that matter or the audit or review. We also have adopted a seven-year retention period to coincide with a forthcoming retention requirement to be promulgated by the Public Company Accounting Oversight Board, which, according to one commenter, should reduce processing costs associated with the rule.[92] Also, as noted above, we have clarified in this release that the auditor need not retain every document read, examined or reviewed as part of the audit or review process. As a result of these revisions and clarifications, we believe that implementation of the revised rule should be less costly for accounting firms than anticipated by the commenters.

Furthermore, one commenter noted that records management procedures for smaller accounting firms should be the same as they are for larger firms.[93] This commenter indicated that ''the cost of implementing a [formalized records management] program at any-sized firm will be surpassed by the benefits received and the future cost savings.''[94]

C. Small Entities Subject to the Rule

Our rules do not define ''small business'' or ''small organization'' for purposes of accounting firms. The Small Business Administration defines small business, for purposes of accounting firms, as those with under $6 million in annual revenues.[95] We have only limited data indicating revenues for accounting firms, and we cannot estimate the number of firms with less than $6 million in revenues that practice before the Commission.

In the Initial Regulatory Flexibility Analysis we requested comment on the number of firms with less than $6 million in revenue in order to determine the number of small firms potentially affected by the rule, but we received no response.

D. Projected Reporting, Recordkeeping and Other Compliance Requirements

Under the new rule,[96] accountants who audit or review an issuer's or registered investment company's financial statements must retain certain records for a period of seven years from conclusion of the audit or review. The records to be retained include records relevant to the audit or review, such as workpapers and other documents that form the basis of the audit or review and memoranda, correspondence, communications, other documents, and records (including electronic records), which are created, sent or received in connection with the audit or review, and contain conclusions, opinions, analyses, or financial data related to the audit or review. Records described in the rule would be retained whether the conclusions, opinions, analyses, or financial data in the records support the final conclusions reached by the auditor, or contain information or data, relating to a significant matter, that is inconsistent with the final conclusions of the auditor on that matter or the audit or review. The required retention of audit and review records should discourage the destruction, and assist in the availability, of records that may be relevant to investigations conducted under the securities laws.

In the Proposing Release, we estimated that adoption of the rule would not result in any significant increase in costs for accounting firms or issuers because the rule would not require the creation of records, would not significantly increase procedures related to the review of documents, and minimal, if any, work would be associated with the retention of these records. We indicated that the disposal of those records, which would occur in any event, merely would be delayed. In addition, because an already large and ever-increasing portion of the records required to be retained are kept electronically, we stated that the incremental increase in storage costs for documents would not be significant for any firm or for any single audit client.

For purposes of the Paperwork Reduction Act, we estimated in the proposing release the total burden to be 15,000 burden hours. We further estimated that, assuming an accounting firm's average cost of in-house staff is $110 per hour,[97] the total cost would be $1,650,000.

We received comments indicating that, based on the proposed rule, our cost estimate was low. Due to revisions made to the rule the cost estimates

[89] *See* section 802 of the Sarbanes-Oxley Act.

[90] Letter from Grant Thornton LLP, dated December 27, 2002.

[91] *See, e.g.*, letter from BDO Seidman, LLP, dated December 27, 2002; letter from Grant Thornton LLP dated December 27, 2002; letter from KPMG LLP dated December 27, 2002; letter from Deloitte & Touche LLP dated December 27, 2002.

[92] Letter from Lynette Downing, HLB Tautges Redpath, Ltd., dated December 27, 2002.

[93] Letter from Lynette Downing, HLB Tautges Redpath, Ltd., dated December 27, 2002.

[94] *Id.*

[95] 13 CFR 121.201.

[96] *See* section 802 of the Sarbanes-Oxley Act of 2002.

[97] We estimate that associates would perform three-fourths of the required work, with a partner performing about one-fourth of the work. We also estimate that, on average, an associate's annual salary would be approximately $125,000 and a partner's annual compensation would be approximately $500,000. Based on these amounts, the in-house cost of an associate's time would be approximately $65 per hour, and the in-house cost of a partner's time would be approximately $250 per hour. The average hourly rate, therefore, would be about $110 per hour ([(3 × $65) + $250] / 4).

provided by the commenters, however, may no longer be accurate. For example, a large accounting firm stated that if it would be required to retain all financial data ''received'' from the issuer in the course of the audit, its current document retention costs of approximately $4.5 million would double.[98] This firm questioned whether all of the issuer's financial information, records, databases, and reports that the auditor examines on the issuer's premises, but are not made part of the auditor's workpapers or otherwise retained by the auditor, would be deemed to be ''received'' by the auditor and subject to the retention requirements in rule 2–06. As noted previously in this release, we do not believe that Congress intended for accounting firms to duplicate and retain all of the issuer's financial information, records, databases, and reports that might be read, examined, or reviewed by the auditor.[99] Accordingly, we do not believe that the ''received'' criterion in rule 2–06(a)(1) requires that the auditor retain such records and the firm's anticipated document retention costs, therefore, should be significantly reduced.

Another accounting firm indicated that administrative costs of retaining records, based on the proposed rule, could include a one-time cost of $1 million and ongoing annual costs of $500,000 to $1 million.[100] This firm also estimated that increased litigation costs associated with complying with discovery requests and payment of damages would increase annual audit costs by at least five percent and perhaps as much as fifteen to twenty percent.[101] As noted above, we believe that revisions to the rule in response to commenters' concerns should lessen the administrative costs anticipated by this commenter. Regarding the commenter's cost estimates related to potential litigation, we recognize that one purpose of section 802 is to facilitate investigations of potential violations of securities laws, Commission rules and criminal laws,[102] which could impact a firm's litigation costs. Nonetheless, the firm's estimate would appear to be speculative. If the retention requirements lead to more efficient oversight of the accounting profession then they may result in improved audit quality and enhanced investor confidence in the profession.

Other accounting firms noted that many variables would affect the costs related to the rule, and that the ultimate increase in costs is difficult to quantify.[103] One commenter indicated that the amount of changes to be made to current record retention systems, and the related costs, depends on whether the accounting firm has a good record management system already in place.[104] For those firms with established records management programs, this commenter indicated that the rule would require a review and possibly fine-tuning of the firms' existing policies and procedures. This commenter also noted that adopting the proposed five-year retention requirement would have been more costly than adopting the seven-year retention requirement that is consistent with the forthcoming auditing standard to be promulgated by the Public Company Accounting Oversight Board. In this commenter's view, having two retention periods would have increased costs associated with processing the records.[105]

E. Agency Action To Minimize Effect on Small Entities

The Regulatory Flexibility Act directs us to consider significant alternatives that would accomplish the stated objective, while minimizing any significant adverse impact on small entities. In connection with the proposed amendments, we considered the following alternatives:

1. The establishment of differing compliance or reporting requirements or timetables that take into account the resources of small entities;

2. The clarification, consolidation, or simplification of compliance and reporting requirements under the rule for small entities;

3. The use of performance rather than design standards; and

4. An exemption from coverage of the proposed amendments, or any part thereof, for small entities.

The Sarbanes-Oxley Act provides the basis for the requirements and timetables for the record retention rules. The rule is designed to require the retention of those records necessary for oversight of the audit process, to enhance the reliability and credibility of financial statements for all public companies, and to facilitate enforcement of the securities laws.

We considered not applying the proposals to small accounting firms. We believe, however, that investors would benefit if accountants subject to the proposed record retention rules, regardless of their size, audit all companies. We do not believe that it is feasible to further clarify, consolidate, or simplify the proposed rules for small entities.

VII. Codification Update

The ''Codification of Financial Reporting Policies'' announced in Financial Reporting Release No. 1 (April 15, 1982) is amended as follows:

By amending section 602 to add a new discussion at the end of that section under Financial Reporting Release Number 66 (FR–66) that includes the text in Section II of this release.

The Codification is a separate publication of the Commission. It will not be published in the Code of Federal Regulations.

VIII. Statutory Bases and Text of Amendments

We are adopting amendments to Regulation S–X under the authority set forth in sections 3(a) and 802 of the Sarbanes-Oxley Act, and Schedule A and sections 7, 8, 10, 19 and 28 of the Securities Act, sections 3, 10A, 12, 13, 14, 17, 23 and 36 of the Exchange Act, sections 5, 10, 14 and 20 of the Public Utility Holding Company Act of 1935, sections 8, 30, 31, 32 and 38 of the Investment Company Act of 1940.

List of Subjects in 17 CFR Part 210

Accountants, Accounting.

Text of Amendments

In accordance with the foregoing, Title 17, Chapter II of the Code of Federal Regulations is amended as follows:

1. The authority citation for Part 210 is revised to read as follows:

Authority: 15 U.S.C. 77f, 77g, 77h, 77j, 77s, 77z–2, 77aa(25), 77aa(26), 78j–1, 78*l*, 78m, 78n, 78o(d), 78u–5, 78w(a), 78*ll*(d), 79e(b), 79j(a), 79n, 79t(a), 80a–8, 80a–20, 80a–29,

[98] Letter from PricewaterhouseCoopers dated December 27, 2002.

[99] See letter from Deloitte & Touche dated December 27, 2002, *quoting* Statement of Senator Orrin Hatch before the Senate Judiciary Committee (April 25, 2002): ''I anticipate that the SEC will exercise its discretion to promulgate only those rules and regulations that are necessary to ensure that documents material to an audit or review, as well as any future investigation, are retained.''

[100] Letter from BDO Seidman, LLP dated December 27, 2002.

[101] *Id.*

[102] *See* Statement of Senator Leahy on the Senate floor: ''[I]t is intended that the SEC promulgate rules and regulations that require the retention of such substantive material * * * for such a period as is reasonable and necessary for effective enforcement of the securities laws and the criminal laws * * *.'' 148 Cong. Rec. S7419 (July 26, 2002).

[103] Letter from Grant Thornton, dated December 27, 2002.

[104] Letter from Lynette Downing, HLB Tautges Redpath, Ltd., dated December 27, 2002. This commenter estimated that, depending on the information systems and staff currently in place, to maintain electronic records ''an investment of $100,000 to $250,000 for each $5 million in net fees is likely with ongoing annual expenses of $50,000 to $100,000.''

[105] *Id.*

80a–30, 80a–31, 80a–37(a), unless otherwise noted.

2. By adding § 210.2–06 to read as follows:

§ 210.2–06 Retention of audit and review records.

(a) For a period of seven years after an accountant concludes an audit or review of an issuer's financial statements to which section 10A(a) of the Securities Exchange Act of 1934 (15 U.S.C. 78j-1(a)) applies, or of the financial statements of any investment company registered under section 8 of the Investment Company Act of 1940 (15 U.S.C. 80a-8), the accountant shall retain records relevant to the audit or review, including workpapers and other documents that form the basis of the audit or review, and memoranda, correspondence, communications, other documents, and records (including electronic records), which:

(1) Are created, sent or received in connection with the audit or review, and

(2) Contain conclusions, opinions, analyses, or financial data related to the audit or review.

(b) For the purposes of paragraph (a) of this section, *workpapers* means documentation of auditing or review procedures applied, evidence obtained, and conclusions reached by the accountant in the audit or review engagement, as required by standards established or adopted by the Commission or by the Public Company Accounting Oversight Board.

(c) Memoranda, correspondence, communications, other documents, and records (including electronic records) described in paragraph (a) of this section shall be retained whether they support the auditor's final conclusions regarding the audit or review, or contain information or data, relating to a significant matter, that is inconsistent with the auditor's final conclusions regarding that matter or the audit or review. Significance of a matter shall be determined based on an objective analysis of the facts and circumstances. Such documents and records include, but are not limited to, those documenting a consultation on or resolution of differences in professional judgment.

(d) For the purposes of paragraph (a) of this section, the term *issuer* means an issuer as defined in section 10A(f) of the Securities Exchange Act of 1934 (15 U.S.C. 78j–1(f)).

By the Commission.

Dated: January 24, 2003.

Margaret H. McFarland,

Deputy Secretary.

[FR Doc. 03–2118 Filed 1–29–03; 8:45 am]

BILLING CODE 8010–01–P

Federal Register

Thursday,
January 30, 2003

Part V

Department of Defense
General Services Administration
National Aeronautics and Space Administration

48 CFR Parts 2, 12, and 52

Federal Acquisition Regulation; Commercially Available Off-the-Shelf Items; Proposed Rule

DEPARTMENT OF DEFENSE

GENERAL SERVICES ADMINISTRATION

NATIONAL AERONAUTICS AND SPACE ADMINISTRATION

48 CFR Parts 2, 12, and 52

[FAR Case 2000–305]

RIN 9000–AJ55

Federal Acquisition Regulation; Commercially Available Off-the-Shelf Items

AGENCIES: Department of Defense (DoD), General Services Administration (GSA), and National Aeronautics and Space Administration (NASA).

ACTION: Advance notice of proposed rulemaking.

SUMMARY: The Federal Acquisition Regulatory Council is soliciting comments regarding the implementation of section 4203 of the Federal Acquisition Reform Act (the Act) with respect to Commercially Available Off-the-Shelf Item Acquisitions. The Act requires the Federal Acquisition Regulation (FAR) to list certain provisions of law that are inapplicable to contracts for acquisition of commercially available off-the-shelf items. The statute excludes section 15 of the Small Business Act and bid protest procedures from the list. The list of statutes cannot include a provision of law that provides for criminal or civil penalties.

Certain laws have already been determined to be inapplicable to all commercial items as a result of the implementation of the Federal Acquisition Streamlining Act of 1994 (see FAR 12.503). The additional provisions of law that could be determined inapplicable to commercially available off-the-shelf items are listed under **SUPPLEMENTARY INFORMATION** below.

DATES: Comments are due on or before March 31, 2003.

ADDRESSES: Interested parties should submit written comments to—General Services Administration, FAR Secretariat (MVA), 1800 F Street, NW., Room 4035, *Attn:* Laurie Duarte, Washington, DC 20405.

Submit electronic comments via the Internet to—*farcase.2000–305@gsa.gov.*

Please submit comments only and cite FAR case 2000–305 in all correspondence related to this case.

FOR FURTHER INFORMATION CONTACT: The FAR Secretariat, Room 4035, GS Building, Washington, DC 20405, at (202) 501–4755 for information pertaining to status or publication schedules. For clarification of content, contact Ms. Victoria Moss, Procurement Analyst, at (202) 501–4764. Please cite FAR case 2000–305.

SUPPLEMENTARY INFORMATION: The provisions of law that could be determined inapplicable to commercially available off-the-shelf items are: 5 U.S.C. 552a, Privacy Act (*see* 52.239–1); 29 U.S.C. 793, Affirmative Action for Handicapped Workers (*see* 52.222–36); 31 U.S.C. 529, Restriction on Advance Payments (allow agencies to modify paragraph (i) in the clause at 52.212–4 to require payment upon notice of shipping); 38 U.S.C. 4212, Affirmative Action for Special Disabled Vietnam Era Veterans (*see* 52.222–35); 38 U.S.C. 4212(d)(1), Employment Reports on Special disabled Veterans and Veterans of the Vietnam Era (*see* 52.222–37); 41 U.S.C. 10, Buy American Act—Supplies (*see* 52.225–1 and 52.225–3); 41 U.S.C. 253d, Validation of Proprietary Data Restrictions (*see* section 12.211); 41 U.S.C. 253g and 10 U.S.C. 2482, Prohibition on Limiting Subcontractor Direct Sales to the United States (*see* 52.203–6); 41 U.S.C. 254d(c) and 10 U.S.C. 2513(c), Examination of Records of Contractor (*see* 52.215–2); 41 U.S.C. 418a, Rights in Technical Data (*see* section 12.211); 41 U.S.C. 442, Cost Accounting Standards (*see* section 12.214 and the FAR Appendix, 48 CFR Chapter 99); 41 U.S.C. 423(e)(3), Administrative Actions (*see* 3.104); 46 U.S.C. 1241(b), Transportation in American Vessels of Government Personnel and Certain Cargo (*see* 52.247–64); and 42 U.S.C. 6962(c)(3)(A)(ii), Estimate of Percentage of Recovered Material Content for EPA-Designated Products (see 52.223–9).

For purposes of this notice, a ''commercially available off-the-shelf item''—

(a) Means any item of supply, other than real property, that—

(1) Is of a type customarily used by the general public for nongovernmental purposes;

(2) Has been sold in substantial quantities in the commercial marketplace; and

(3) Is offered to the Government, without modification, in the same form in which it is sold in the commercial marketplace.

(b) This does not include bulk cargo, as defined in 46 U.S.C. App. 1702, such as agricultural and petroleum products.

Dated: January 23, 2003.

Al Matera,

Director, Acquisition Policy Division.

[FR Doc. 03–1961 Filed 1–29–03; 8:45 am]

BILLING CODE 6820–EP–P

Federal Register

Thursday,
January 30, 2003

Part VI

Department of Defense
General Services Administration
National Aeronautics and Space Administration

48 CFR Parts 2 and 31

Federal Acquisition Regulation; Depreciation Cost Principle; Proposed Rule

DEPARTMENT OF DEFENSE

GENERAL SERVICES ADMINISTRATION

NATIONAL AERONAUTICS AND SPACE ADMINISTRATION

48 CFR Parts 2 and 31

[FAR Case 2001–026]

RIN 9000–AJ56

Federal Acquisition Regulation; Depreciation Cost Principle

AGENCIES: Department of Defense (DoD), General Services Administration (GSA), and National Aeronautics and Space Administration (NASA).

ACTION: Proposed rule.

SUMMARY: The Civilian Agency Acquisition Council and the Defense Acquisition Regulations Council (Councils) are proposing to amend the Federal Acquisition Regulation (FAR) to revise the depreciation cost principle.

DATES: Interested parties should submit comments in writing on or before March 31, 2003 to be considered in the formulation of a final rule.

ADDRESSES: Submit written comments to—General Services Administration, FAR Secretariat (MVA), 1800 F Street, NW., Room 4035, Attn: Laurie Duarte, Washington, DC 20405.

Submit electronic comments via the Internet to—*farcase.2001–026@gsa.gov.*

Please submit comments only and cite FAR case 2001–026 in all correspondence related to this case.

FOR FURTHER INFORMATION CONTACT: The FAR Secretariat, Room 4035, GS Building, Washington, DC 20405, at (202) 501–4755 for information pertaining to status or publication schedules. For clarification of content, contact Mr. Ralph De Stefano at (202) 501–1758. Please cite FAR case 2001–026.

SUPPLEMENTARY INFORMATION:

A. Background

The Councils performed a comprehensive review of the cost principle at FAR 31.205–11, Depreciation, to evaluate the need for each specific requirement. As a result of the review, the Councils are proposing to revise the cost principle as follows:

1. *Definition of depreciation.* The language currently at FAR 31.205–11(a) is a definition for the term ''depreciation.'' Since the term is used throughout the FAR, the definition was moved to FAR 2.101, Definitions.

2. *Residual values.* The depreciation cost principle is more restrictive than cost accounting standards (CAS) because it requires a contractor to use residual values in establishing depreciation costs, while the cost accounting standard for depreciation of tangible capital assets at 48 CFR 9904.409–50(h) allows contractors to ignore residual values under 10 percent for tangible personal property. The rule adds language at FAR 31.205–11(a) to make the policy on residual values consistent with CAS.

3. *Depreciation claimed for tax purposes.* Currently, FAR 31.205–11(e) limits allowable depreciation to the lesser of the depreciation used for Federal income tax purposes or for financial statements. This policy encourages contractors to use the same depreciation for both tax and financial reporting purposes. The Councils have eliminated all references to Federal income tax accounting since it is unnecessary to tie allowable depreciation to depreciation claimed for tax purposes, and to penalize contractors because they use an acceptable depreciation method for tax purposes that is different from that used for financial purposes.

4. *Write-down due to business combinations/impaired assets.* The Councils added ''except as indicated in paragraphs (g) and (h) of this subsection'' to FAR 31.205–11(c) of the proposed rule to eliminate any potential inequity caused among these paragraphs. In the proposed rule, the language currently in paragraphs FAR 31.205–11(n) and (o) are moved to new paragraphs (g) and (h) to specifically disallow the effect on depreciation when contractors are involved in the write-down of assets from carrying value to fair market value as a result of business combinations or impairments. In effect, these paragraphs require contractors to continue to use their depreciation schedules as if the business combination (paragraph (g)) or impaired asset write-down (paragraph (h)) never occurred. However, if there is an asset write-down due to either of these events, the depreciation calculated based on generally accepted accounting principles (GAAP) will be lower than the depreciation generated by the use of the contractor's previous depreciation schedule. Without a stated exception to the general rule in the proposed paragraph (c) that allowable depreciation cannot exceed the amount calculated based on GAAP, one might misinterpret the cost principle and inappropriately disallow the depreciation in excess of GAAP when a write-down of an asset due to a business combination or impairment occurs.

5. *Emergency facilities.* The current paragraph at FAR 31.205–11(i) has been deleted since the Councils are not aware of any existing contracts supporting the operation of emergency facilities covered by certificates of necessity.

6. The rule makes other changes to clarify, improve the structure, and remove redundancies throughout the cost principle.

This is not a significant regulatory action and, therefore, was not subject to review under section 6(b) of Executive Order 12866, Regulatory Planning and Review, dated September 30, 1993. This rule is not a major rule under 5 U.S.C. 804.

B. Regulatory Flexibility Act

The Councils do not expect this proposed rule to have a significant economic impact on a substantial number of small entities within the meaning of the Regulatory Flexibility Act, 5 U.S.C. 601, *et seq.*, because most contracts awarded to small entities use simplified acquisition procedures or are awarded on a competitive, fixed-price basis, and do not require application of the cost principles discussed in this rule. An Initial Regulatory Flexibility Analysis has, therefore, not been performed. We invite comments from small businesses and other interested parties. The Councils will consider comments from small entities concerning the affected FAR parts in accordance with 5 U.S.C. 610. Interested parties must submit such comments separately and should cite 5 U.S.C. 601, *et seq.* (FAR case 2001–026), in correspondence.

C. Paperwork Reduction Act

The Paperwork Reduction Act does not apply because the proposed changes to the FAR do not impose information collection requirements that require the approval of the Office of Management and Budget under 44 U.S.C. 3501, *et seq.*

List of Subjects in 48 CFR Parts 2 and 31

Government procurement.

Dated: January 23, 2003.

Al Matera,

Director, Acquisition Policy Division.

Therefore, DoD, GSA, and NASA propose amending 48 CFR parts 2 and 31 as set forth below:

1. The authority citation for 48 CFR parts 2 and 31 continues to read as follows:

Authority: 40 U.S.C. 486(c); 10 U.S.C. chapter 137; and 42 U.S.C. 2473(c).

PART 2—DEFINITIONS OF WORDS AND TERMS

2. Amend section 2.101 in paragraph (b) by adding, in alphabetical order, the definition ''Depreciation'' to read as follows:

2.101 Definitions.

* * * * *

Depreciation means a charge to current operations that distributes the cost of a tangible capital asset, less estimated residual value, over the estimated useful life of the asset in a systematic and logical manner. It does not involve a process of valuation. Useful life refers to the prospective period of economic usefulness in a particular contractor's operations as distinguished from physical life; it is evidenced by the actual or estimated retirement and replacement practice of the contractor.

* * * * *

PART 31—CONTRACT COST PRINCIPLES AND PROCEDURES

3. Revise section 31.205–11 to read as follows:

31.205–11 Depreciation.

(a) Depreciation on a contractor's plant, equipment, and other capital facilities is an allowable contract cost, subject to the limitations contained in this cost principle. For tangible personal property, only estimated residual values that exceed 10 percent of the capitalized cost of the asset shall be used in establishing depreciable costs. Depreciation cost that would reduce the book value of a tangible capital asset below its residual value is unallowable.

(b) Contractors having contracts subject to 48 CFR 9904.409, Depreciation of Tangible Capital Assets, shall adhere to the requirement of that standard for all fully CAS-covered contracts and may elect to adopt the standard for all other contracts. All requirements of 48 CFR 9904.409 are applicable if the election is made, and contractors shall continue to follow it until notification of final acceptance of all deliverable items on all open negotiated Government contracts.

(c) For contracts to which 48 CFR 9904.409 is not applied: Except as indicated in paragraphs (g) and (h) of this subsection, allowable depreciation shall not exceed the amount used for financial accounting purposes and shall be determined in a manner consistent with the depreciation policies and procedures followed in the same segment on non-Government business.

(d) Depreciation, rental, or use charges are unallowable on property acquired from the Government at no cost by the contractor or by any division, subsidiary, or affiliate of the contractor under common control.

(e) The depreciation on any item that meets the criteria for allowance at price under 31.205–26(e) may be based on that price, provided the same policies and procedures are used for costing all business of the using division, subsidiary, or organization under common control.

(f) No depreciation or rental is allowed on property fully depreciated by the contractor or by any division, subsidiary, or affiliate of the contractor under common control. However, a reasonable charge for using fully depreciated property may be agreed upon and allowed (but see 31.109(h)(2)). In determining the charge, the contractor shall consider cost, total estimated useful life at the time of negotiations, effect of any increased maintenance charges or decreased efficiency due to age, and the amount of depreciation previously charged to Government contracts or subcontracts.

(g) Whether or not the contract is otherwise subject to CAS, the contractor shall comply with the requirements of 31.205–52, which limit the allowability of depreciation.

(h) In the event of a write-down from carrying value to fair value as a result of impairments caused by events or changes in circumstances, allowable depreciation of the impaired assets is limited to the amounts that would have been allowed had the assets not been written down (see 31.205–16(g)). However, this does not preclude a change in depreciation resulting from other causes such as permissible changes in estimates of service life, consumption of services, or residual value.

(i) A ''capital lease'' as defined in Statement of Financial Accounting Standard No. 13 (FAS–13), Accounting for Leases, is subject to the requirements of this cost principle. FAS–13 requires that capital leases be treated as purchased assets; *i.e.*, be capitalized, and the capitalized value of such assets be distributed over their useful lives as depreciation charges, or over the leased life as amortization charges, as appropriate. Capital leases under FAS–13 are subject to the requirements of 31.205–11. Operating leases are subject to the requirements of 31.205–36. The standards of financial accounting and reporting prescribed by FAS–13 are incorporated into this principle and govern its application, except as follows:

(1) Rental costs under a sale and leaseback arrangement are allowable up to the amount that would have been allowed had the contractor retained title to the asset.

(2) If it is determined that the terms of the capital lease have been significantly affected by the fact that the lessee and lessor are related, depreciation charges are not allowable in excess of those that would have occurred if the lease contained terms consistent with those found in a lease between unrelated parties.

(j) The undepreciated balance of assets acquired before the effective date of this cost principle need not be retroactively adjusted if the assets were properly depreciated on Government contracts at the time the depreciation was charged. However, the remaining undepreciated balance as of the effective date of this cost principle shall be depreciated using the same method as used for financial statement purposes.

31.205–16 [Amended]

4. Amend section 31.205–16 in the first sentence of paragraph (b) by removing ''31.205–11(m))'' and adding ''31.205–11(i))'' in its place.

5. Amend section 31.205–36 by revising paragraph (a); and removing paragraph (b)(4) to read as follows:

31.205–36 Rental costs.

(a) This subsection is applicable to the cost of renting or leasing real or personal property acquired under ''operating leases'' as defined in Statement of Financial Accounting Standards No. 13 (FAS–13), Accounting for Leases. Compliance with 31.205–11(i) requires that assets acquired by means of capital leases, as defined in FAS–13, be treated as purchased assets; *i.e.*, be capitalized and the capitalized value of such assets be distributed over their useful lives as depreciation charges, or over the lease term as amortization charges, as appropriate.

* * * * *

[FR Doc. 03–1962 Filed 1–29–03; 8:45 am]

BILLING CODE 6820–EP–P

Federal Register

Thursday,
January 30, 2003

Part VII

Department of Defense
General Services Administration
National Aeronautics and Space Administration

48 CFR Parts 31 and 52

Federal Acquisition Regulation; Insurance and Pension Costs; Proposed Rule

DEPARTMENT OF DEFENSE

GENERAL SERVICES ADMINISTRATION

NATIONAL AERONAUTICS AND SPACE ADMINISTRATION

48 CFR Parts 31 and 52

[FAR Case 2001–037]

RIN 9000–AJ57

Federal Acquisition Regulation; Insurance and Pension Costs

AGENCIES: Department of Defense (DoD), General Services Administration (GSA), and National Aeronautics and Space Administration (NASA).

ACTION: Proposed rule.

SUMMARY: The Civilian Agency Acquisition Council and the Defense Acquisition Regulations Council (Councils) are proposing to amend the Federal Acquisition Regulation (FAR) to amend the insurance and indemnification cost principle and the portion of the compensation cost principle relating to pension costs.

DATES: Interested parties should submit comments in writing on or before March 31, 2003 to be considered in the formulation of a final rule.

ADDRESSES: Submit written comments to—General Services Administration, FAR Secretariat (MVA), 1800 F Street, NW., Room 4035, *Attn:* Laurie Duarte, Washington, DC 20405.

Submit electronic comments via the Internet to—*farcase.2001–037@gsa.gov.*

Please submit comments only and cite FAR case 2001–037 in all correspondence related to this case.

FOR FURTHER INFORMATION CONTACT: The FAR Secretariat, Room 4035, GS Building, Washington, DC 20405, at (202) 501–4755 for information pertaining to status or publication schedules. For clarification of content, contact Mr. Ralph De Stefano at (202) 501–1758. Please cite FAR case 2001–037.

SUPPLEMENTARY INFORMATION:

A. Background

The Councils have performed an analysis of FAR 31.205–6(j), Pension costs, and FAR 31.205–19, Insurance and indemnification, and propose the following revisions:

1. Substitute the term ''assign'' for the term ''account'' in the newly renumbered paragraphs (j)(1) and (j)(5) of FAR 31.205–6 in order to be consistent with the terminology used in 48 CFR 9904.412, Cost Accounting Standard for Composition and Measurement of Pension Cost (CAS 412), and 48 CFR 9904.413, Adjustment and Allocation of Pension Cost (CAS 413).

2. Revise the current paragraph (j)(4)(i) (renumbered as (j)(3)(i)) at FAR 31.205–6 and the contract clause at FAR 52.215–15 to specifically address how the Government will receive the pension cost adjustment amount when there is a segment closing, a pension plan termination, or a curtailment of benefits for CAS–covered and non-CAS-covered contracts.

3. Move and revise the current paragraph FAR 31.205–6(j)(8) that addresses employee stock ownership plans (ESOPs).

a. Move the discussion of ESOPs out of the current paragraph FAR 31.205–6(j) that addresses pension plans to a new paragraph FAR 31.205–6(q) so that the discussion of ESOPs is included in the coverage addressing all deferred compensation plans, both pension and nonpension.

b. Delete the term ''individual'' from the phrase ''individual stock bonus plan'' to preclude misinterpretation that a separate plan is required for each employee.

c. Add the term ''primarily'' to the phrase ''invest in the stock of the employer corporation'' to clarify that an ESOP does not have to invest 100 percent in the stock of the employer corporation.

d. Consistent with current policies and recent developments in applicable case law, clarify that ESOP costs are to be measured, assigned and allocated in accordance with 48 CFR 9904.412 for ESOPs that meet the definition of a pension plan, and in accordance with 48 CFR 9904.415, Accounting for the Cost of Deferred Compensation, for all other ESOPs. As ESOP accounting techniques continue to evolve, this FAR provision may require further modifications, *e.g.*, if the present CAS treatment of this topic is changed as a result of the current ESOP project being pursued by the CAS Board.

e. Increase the limitation of ESOP contributions in any one year from 15 percent to 25 percent, which is consistent with the Internal Revenue Code limitation on ESOP contributions for corporations.

f. Remove the requirement for the contracting officer to approve the contribution rate in order to be consistent with the requirements for defined contribution pension and deferred compensation plans that are not ESOPs.

4. Eliminate the discount rate provision at the current paragraph FAR 31.205–19(a)(3)(i). The CAS Board revised 48 CFR 9904.416, Accounting for Insurance Costs, to use the Treasury Rate, which is the same rate currently contained in the insurance and indemnification cost principle. Therefore, it is no longer necessary for the cost principle to specify the discount rate.

5. Other editorial changes. The rule makes other editorial changes, including deleting—

a. The current paragraph FAR 31.205–6(j)(1) since FAR 31.001 already has a definition of ''pension plan'' that is the same as the definition in CAS 412 and 413;

b. The descriptions of defined-benefit pension plans at FAR 31.205–6(j)(3) and defined-contribution pension plans at FAR 31.205–6(j)(5) since the definitions of these terms are currently at FAR 31.001.

c. References to ''reasonableness'' and ''allocability'' currently found at FAR 31.205–6(j)(2)(ii) and (j)(3)(ii) because these general allowability standards are already addressed at FAR 31.201–2 and FAR 31.201–3. The Councils do not intend to make these changes to alter any current policy.

This is not a significant regulatory action and, therefore, was not subject to review under section 6(b) of Executive Order 12866, Regulatory Planning and Review, dated September 30, 1993. This rule is not a major rule under 5 U.S.C. 804.

B. Regulatory Flexibility Act

The Councils do not expect this proposed rule to have a significant economic impact on a substantial number of small entities within the meaning of the Regulatory Flexibility Act, 5 U.S.C. 601, *et seq.*, because most contracts awarded to small entities use simplified acquisition procedures or are awarded on a competitive, fixed-price basis, and do not require application of the cost principles that are discussed in this rule. An Initial Regulatory Flexibility Analysis has, therefore, not been performed. We invite comments from small businesses and other interested parties. The Councils will consider comments from small entities concerning the affected FAR parts in accordance with 5 U.S.C. 610. Interested parties must submit such comments separately and should cite 5 U.S.C. 601, *et seq.* (FAR case 2001–037), in correspondence.

C. Paperwork Reduction Act

The Paperwork Reduction Act does not apply because the proposed changes to the FAR do not impose information collection requirements that require the

approval of the Office of Management and Budget under 44 U.S.C. 3501, *et seq.*

List of Subjects in 48 CFR Parts 31 and 52

Government procurement.

Dated: January 23, 2003.

Al Matera,

Director, Acquisition Policy Division.

Therefore, DoD, GSA, and NASA propose amending 48 CFR parts 31 and 52 as set forth below:

1. The authority citation for 48 CFR parts 31 and 52 continues to read as follows:

Authority: 40 U.S.C. 486(c); 10 U.S.C. chapter 137; and 42 U.S.C. 2473(c).

PART 31—CONTRACT COST PRINCIPLES AND PROCEDURES

2. Amend section 31.205–6 by—

a. Removing from the second sentence of paragraph (g)(1) ''(j)(7)'' and adding ''(j)(6)'' in its place;

b. Revising paragraph (j);

c. Removing from the second parenthetical in paragraph (p)(2)(i) ''paragraphs (j)(5) and (j)(8)'' and adding ''paragraphs (j)(4) and (q)'' in its place; and

d. Adding paragraph (q) to read as follows:

31.205–6 Compensation for personal services.

* * * * *

(j) *Pension costs.* (1) Pension plans are normally segregated into two types of plans: defined-benefit and defined-contribution pension plans. The contractor shall measure, assign, and allocate the costs of all defined-benefit pension plans and the costs of all defined-contribution pension plans in compliance with 48 CFR 9904.412—Cost Accounting Standard for Composition and Measurement of Pension Cost, and 48 CFR 9904.413—Adjustment and Allocation of Pension Cost. Pension costs are allowable subject to the referenced standards and the cost limitations and exclusions set forth in paragraph (j)(1)(i) and in paragraphs (j)(2) through (j)(6) of this section.

(i) Except for nonqualified pension plans using the pay-as-you-go cost method, to be allowable in the current year, the contractor shall fund pension costs by the time set for filing of the Federal income tax return or any extension. Pension costs assigned to the current year, but not funded by the tax return time, are not allowable in any subsequent year. For nonqualified pension plans using the pay-as-you-go method, to be allowable in the current year, the contractor shall allocate pension costs in the cost accounting period that the pension costs are assigned.

(ii) Pension payments must be paid pursuant to an agreement entered into in good faith between the contractor and employees before the work or services are performed; and the terms and conditions of the established plan. The cost of changes in pension plans are not allowable if the changes are discriminatory to the Government or are not intended to be applied consistently for all employees under similar circumstances in the future.

(iii) Except as provided for early retirement benefits in paragraph (j)(6) of this subsection, one-time-only pension supplements not available to all participants of the basic plan are not allowable as pension costs, unless the supplemental benefits represent a separate pension plan and the benefits are payable for life at the option of the employee.

(iv) Increases in payments to previously retired plan participants covering cost-of-living adjustments are allowable if paid in accordance with a policy or practice consistently followed.

(2) *Defined-benefit pension plans.* The cost limitations and exclusions pertaining to defined-benefit plans are as follows:

(i)(A) Except for nonqualified pension plans, pension costs (see 48 CFR 9904.412–40(a)(1)) assigned to the current accounting period, but not funded during it, are not allowable in subsequent years (except that a payment made to a fund by the time set for filing the Federal income tax return or any extension thereof is considered to have been made during such taxable year). However, any portion of pension cost computed for a cost accounting period, that exceeds the amount required to be funded pursuant to a waiver granted under the provisions of the Employee Retirement Income Security Act of 1974 (ERISA), will be allowable in those future accounting periods in which the funding of such excess amounts occurs (see 48 CFR 9904.412–50(c)(5)).

(B) For nonqualified pension plans, except those using the pay-as-you-go cost method, allowable costs are limited to the amount allocable in accordance with 48 CFR 9904.412–50(d)(2).

(C) For nonqualified pension plans using the pay-as-you-go cost method, allowable costs are limited to the amounts allocable in accordance with 48 CFR 9904.412–50(d)(3).

(ii) Any amount funded in excess of the pension cost assigned to a cost accounting period is not allowable in that period and shall be accounted for as set forth at 48 CFR 9904.412–50(a)(4). The excess amount is allowable in the future period to which it is assigned, to the extent it is not otherwise unallowable.

(iii) Increased pension costs are unallowable if the increase is caused by a delay in funding beyond 30 days after each quarter of the year to which they are assignable. If a composite rate is used for allocating pension costs between the segments of a company and if, because of differences in the timing of the funding by the segments, an inequity exists, allowable pension costs for each segment will be limited to that particular segment's calculation of pension costs as provided for in 48 CFR 9904.413–50(c). The contractor shall make determinations of unallowable costs in accordance with the actuarial method used in calculating pension costs.

(iv) The contracting officer will consider the allowability of the cost of indemnifying the Pension Benefit Guaranty Corporation (PBGC) under ERISA section 4062 or 4064 arising from terminating an employee deferred compensation plan on a case-by-case basis, provided that if insurance was required by the PBGC under ERISA section 4023, it was so obtained and the indemnification payment is not recoverable under the insurance. Consideration under the foregoing circumstances will be primarily for the purpose of appraising the extent to which the indemnification payment is allocable to Government work. If a beneficial or other equitable relationship exists, the Government will participate, despite the requirements of 31.205–19(c)(3) and (d)(3), in the indemnification payment to the extent of its fair share.

(v) Increased pension costs resulting from the withdrawal of assets from a pension fund and transfer to another employee benefit plan fund, or transfer of assets to another account within the same fund, are unallowable except to the extent authorized by an advance agreement. If the withdrawal of assets from a pension fund is a plan termination under ERISA, the provisions of paragraph (j)(3) of this subsection apply. The advance agreement shall—

(A) State the amount of the Government's equitable share in the gross amount withdrawn or transferred; and

(B) Provide that the Government receive a credit equal to the amount of the Government's equitable share of the gross withdrawal or transfer.

(3) *Pension adjustments and asset reversions.* (i) For segment closings, pension plan terminations, or

curtailment of benefits, the amount of the adjustment shall be—

(A) For contracts and subcontracts that are subject to full coverage under the Cost Accounting Standards (CAS) Board rules and regulations, the amount measured, assigned, and allocated in accordance with 48 CFR 9904.413–50(c)(12);

(B) For contracts and subcontracts that are not subject to full coverage under the CAS, the amount measured, assigned, and allocated in accordance with 48 CFR 9904.413–50(c)(12), except the numerator of the fraction at 48 CFR 9904.413–50(c)(12)(vi) is the sum of the pension plan costs allocated to all non-CAS-covered contracts and subcontracts that are subject to Subpart 31.2 or for which cost or pricing data were submitted; and

(C) Credited to the Government either as a cost reduction or by cash refund, at the option of the Government.

(ii) For all other situations where assets revert to the contractor, or such assets are constructively received by it for any reason, the contractor shall, at the Government's option, make a refund or give a credit to the Government for its equitable share of the gross amount withdrawn. The Government's equitable share shall reflect the Government's participation in pension costs through those contracts for which cost or pricing data were submitted or that are subject to Subpart 31.2. Excise taxes on pension plan asset reversions or withdrawals under this paragraph (j)(3)(ii) are unallowable in accordance with 31.205–41(b)(6).

(4) *Defined-Contribution Pension Plans.* In addition to defined-contribution pension plans, this paragraph also covers profit sharing, savings plans, and other such plans, provided the plans fall within the definition of a pension plan at 31.001.

(i) Allowable pension cost is limited to the net contribution required to be made for a cost accounting period after taking into account dividends and other credits, where applicable. However, any portion of pension cost computed for a cost accounting period that exceeds the amount required to be funded pursuant to a waiver granted under the provisions of ERISA will be allowable in those future accounting periods in which the funding of such excess amounts occurs (see 48 CFR 9904.412–50(c)(5)).

(ii) The provisions of paragraphs (j)(2)(ii) and (iv) of this subsection apply to defined-contribution plans.

(5) *Pension plans using the pay-as-you-go cost method.* When using the pay-as-you-go cost method, the contractor shall measure, assign, and allocate the cost of pension plans in accordance with 48 CFR 9904.412 and 9904.413. Pension costs for a pension plan using the pay-as-you-go cost method are allowable to the extent they are not otherwise unallowable.

(6) *Early Retirement Incentives.* An early retirement incentive is an incentive given to an employee to retire early. For contract costing purposes, costs of early retirement incentives are allowable subject to the pension cost criteria contained in paragraphs (j)(2)(i) through (iv) of this section provided—

(i) The contractor measures, assigns, and allocates the costs in accordance with the contractor's accounting practices for pension costs;

(ii) The incentives are in accordance with the terms and conditions of an early retirement incentive plan;

(iii) The contractor applies the plan only to active employees. The cost of extending the plan to employees who retired or were terminated before the adoption of the plan is unallowable; and

(iv) The present value of the total incentives given to any employee in excess of the amount of the employee's annual salary for the previous fiscal year before the employee's retirement is unallowable. The contractor shall compute the present value in accordance with its accounting practices for pension costs. The contractor shall account for any unallowable costs in accordance with 48 CFR 9904.412–50(a)(2).

* * * * *

(q) *Employee stock ownership plans (ESOP).* (1) An ESOP is a stock bonus plan designed to invest primarily in the stock of the employer corporation. The contractor's contributions to an Employee Stock Ownership Trust (ESOT) may be in the form of cash, stock, or property.

(2) Costs of ESOPs are allowable subject to the following conditions:

(i) For ESOPs that meet the definition of a pension plan at 31.001, the contractor—

(A) Measures, assigns, and allocates the costs in accordance with 48 CFR 9904.412;

(B) Funds the pension costs by the time set for filing of the Federal income tax return or any extension. Pension costs assigned to the current year, but not funded by the tax return time, are not allowable in any subsequent year; and

(C) Meets the requirements of paragraph (j)(2)(ii) of this section.

(ii) For ESOPs that do not meet the definition of a pension plan at 31.001, the contractor measures, assigns, and allocated costs in accordance with 48 CFR 9904.415.

(iii) Contributions by the contractor in any one year that exceed 25 percent of salaries and wages of employees participating in the plan in that year are unallowable.

(iv) When the contribution is in the form of stock, the value of the stock contribution is limited to the fair market value of the stock on the date that title is effectively transferred to the trust.

(v) When the contribution is in the form of cash—

(A) Stock purchases by the ESOT in excess of fair market value are unallowable; and

(B) When stock purchases are in excess of fair market value, the contractor shall credit the amount of the excess to the same indirect cost pools that were charged for the ESOP contributions in the year in which the stock purchase occurs. However, when the trust purchases the stock with borrowed funds which will be repaid over a period of years by cash contributions from the contractor to the trust, the contractor shall credit the excess price over fair market value to the indirect cost pools pro rata over the period of years during which the contractor contributes the cash used by the trust to repay the loan.

(vi) When the fair market value of unissued stock or stock of a closely held corporation is not readily determinable, the valuation will be made on a case-by-case basis taking into consideration the guidelines for valuation used by the IRS.

* * * * *

3. Revise section 31.205–19 to read as follows:

31.205–19 Insurance and indemnification.

(a) Insurance by purchase or by self-insuring includes—

(1) Coverage the contractor is required to carry or to have approved, under the terms of the contract; and

(2) Any other coverage the contractor maintains in connection with the general conduct of its business.

(b) For purposes of applying the provisions of this subsection, the Government considers insurance provided by captive insurers (insurers owned by or under control of the contractor) as self-insurance, and charges for it shall comply with the provisions applicable to self-insurance costs in this subsection. However, if the captive insurer also sells insurance to the general public in substantial quantities and it can be demonstrated that the charge to the contractor is based on competitive market forces, the Government will consider the insurance as purchased insurance.

(c) Whether or not the contract is subject to CAS, self-insurance charges

are allowable subject to paragraph (e) of this subsection and the following limitations:

(1) The contractor shall measure, assign, and allocate costs in accordance with 48 CFR 9904.416, Accounting for Insurance Costs.

(2) The contractor shall comply with FAR Part 28. However, approval of a contractor's insurance program in accordance with FAR Part 28 does not constitute a determination as to the allowability of the program's cost.

(3) If purchased insurance is available, any self-insurance charge plus insurance administration expenses in excess of the cost of comparable purchased insurance plus associated insurance administration expenses is unallowable.

(4) Self-insurance charges for risks of catastrophic losses (large dollar coverage with a very low frequency of loss) are unallowable (*see* 48 CFR 28.308(e)).

(d) Purchased insurance costs are allowable, subject to paragraph (e) of this subsection and the following limitations:

(1) For contracts subject to full CAS coverage, the contractor shall measure, assign, and allocate costs in accordance with 48 CFR 9904.416.

(2) For all contracts, premiums for insurance purchased from fronting insurance companies (insurance companies not related to the contractor but who reinsure with a captive insurer of the contractor) are unallowable to the extent they exceed the sum of—

(i) The amount that would have been allowed had the contractor insured directly with the captive insurer; and

(ii) Reasonable fronting company charges for services rendered.

(3) Actual losses are unallowable unless expressly provided for in the contract, except—

(i) Losses incurred under the nominal deductible provisions of purchased insurance, in keeping with sound business practice, are allowable; and

(ii) Minor losses, such as spoilage, breakage, and disappearance of small hand tools that occur in the ordinary course of business and that are not covered by insurance are allowable.

(e) Self-insurance and purchased insurance costs are subject to the cost limitations in the following paragraphs:

(1) Costs of insurance required or approved pursuant to the contract are allowable.

(2) Costs of insurance maintained by the contractor in connection with the general conduct of its business are allowable subject to the following limitations:

(i) Types and extent of coverage shall follow sound business practice, and the rates and premiums shall be reasonable.

(ii) Costs allowed for business interruption or other similar insurance shall be limited to exclude coverage of profit.

(iii) The cost of property insurance premiums for insurance coverage in excess of the acquisition cost of the insured assets is allowable only when the contractor has a formal written policy assuring that in the event the insured property is involuntarily converted, the new asset shall be valued at the book value of the replaced asset plus or minus adjustments for differences between insurance proceeds and actual replacement cost. If the contractor does not have such a formal written policy, the cost of premiums for insurance coverage in excess of the acquisition cost of the insured asset is unallowable.

(iv) Costs of insurance for the risk of loss of, or damage to, Government property are allowable only to the extent that the contractor is liable for such loss or damage and such insurance does not cover loss or damage which results from willful misconduct or lack of good faith on the part of any of the contractor's directors or officers, or other equivalent representatives.

(v) Costs of insurance on the lives of officers, partners, proprietors, or employees are allowable only to the extent that the insurance represents additional compensation (see 31.205–6).

(3) The cost of insurance to protect the contractor against the costs of correcting its own defects in materials and workmanship is unallowable. However, insurance costs to cover fortuitous or casualty losses resulting from defects in materials or workmanship are allowable as a normal business expense.

(4) Premiums for retroactive or backdated insurance written to cover losses that have occurred and are known are unallowable.

(5) The Government is obligated to indemnify the contractor only to the extent authorized by law, as expressly provided for in the contract, except as provided in paragraph (d)(3) of this subsection.

(6) Late premium payment charges related to employee deferred compensation plan insurance incurred pursuant to Section 4007 (29 U.S.C. 1307) or Section 4023 (29 U.S.C. 1323) of the Employee Retirement Income Security Act of 1974 are unallowable.

PART 52—SOLICITATION PROVISIONS AND CONTRACT CLAUSES

4. Amend section 52.215–15 by revising the date of the clause and paragraph (b) to read as follows:

52.215–15 Pension Adjustments and Asset Reversions.

* * * * *

Pension Adjustments and Asset Reversions (Date)

* * * * *

(b) For segment closings, pension plan terminations, or curtailment of benefits, the amount of the adjustment shall be—

(1) For contracts and subcontracts that are subject to full coverage under the Cost Accounting Standards (CAS) Board rules and regulations (48 CFR Chapter 99), the amount measured, assigned, and allocated in accordance with 48 CFR 9904.413–50(c)(12);

(2) For contracts and subcontracts that are not subject to full coverage under the CAS, the amount measured, assigned, and allocated in accordance with 48 CFR 9904.413–50(c)(12), except the numerator of the fraction at 48 CFR 904.413–50(c)(12)(vi) shall be the sum of the pension plan costs allocated to all non-CAS covered contracts and subcontracts that are subject to Federal Acquisition Regulation (FAR) Subpart 31.2 or for which cost or pricing data were submitted; and

(3) Credited to the Government either as a cost reduction or by cash refund, at the option of the Government.

* * * * *

(End of Clause)

[FR Doc. 03–1963 Filed 1–29–03; 8:45 am]

BILLING CODE 6820–EP–P

Federal Register

Thursday,
January 30, 2003

Part VIII

The President

Proclamation 7643—National Consumer Protection Week, 2003

Federal Register
Vol. 68, No. 20
Thursday, January 30, 2003

Presidential Documents

Title 3—

The President

Proclamation 7643 of January 27, 2003

National Consumer Protection Week, 2003

By the President of the United States of America

A Proclamation

Few technologies have become fixtures in our daily lives as quickly as computers and the Internet. Today, more than half of all Americans log on to the Internet, and that number is growing. Our access to information, entertainment, credit and banking, products, and services from every corner of the world is greater than ever before. As our personal information becomes more accessible, consumers, corporations, and government agencies must take precautions against the misuse of that information.

Computer technology and the Internet have revolutionized our ability to communicate and share knowledge. This new freedom offers incredible opportunities; but as individuals and as a Nation, we must guard against the misuse of personal information and identity theft. The theme of this year's National Consumer Protection Week is ''Information Security,'' and during this week we resolve to help all Americans learn how to keep personal information secure.

For consumers, securing a computer is a matter of routine maintenance and caution. Effective passwords, firewalls, and up-to-date antivirus software can help protect computers, and the personal or business information we store on them, from those who would damage a network operation or steal personal information to commit a crime. By practicing effective information security measures, all citizens can contribute to the protection of our national information infrastructure.

To assist consumers, public and private entities have joined forces to highlight the importance of information security. They include the Federal Trade Commission, the U.S. Postal Service, the U.S. Postal Inspection Service, the Federal Consumer Information Center, the National Association of Attorneys General, the National Consumers League, the American Association of Retired Persons, the Better Business Bureau, the Consumer Federation of America, and the National Association of Consumer Agency Administrators. The National Strategy to Secure Cyberspace also offers guidance for the full range of computer users on information security. By working together, we can help consumers and businesses understand how information security affects their decisions at home and in the marketplace.

During National Consumer Protection Week, I encourage all Americans to take the appropriate steps to ensure the security of their personal or sensitive information. By learning ways to safeguard this data, individuals can help ensure their financial security, and contribute to the strength and prosperity of our Nation.

NOW, THEREFORE, I, GEORGE W. BUSH, President of the United States of America, by virtue of the authority vested in me by the Constitution and laws of the United States, do hereby proclaim February 2 through 8, 2003, as National Consumer Protection Week. I call upon Government officials, industry leaders, and consumer advocates to provide consumers with information about how we can help safeguard the economic future of all Americans by keeping our personal information secure.

IN WITNESS WHEREOF, I have hereunto set my hand this twenty-seventh day of January, in the year of our Lord two thousand three, and of the Independence of the United States of America the two hundred and twenty-seventh.

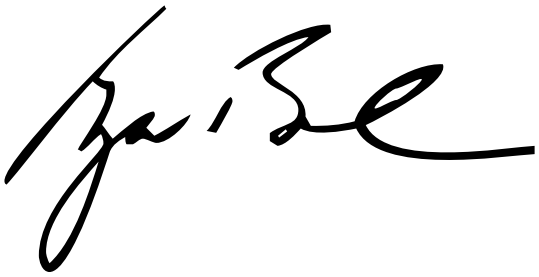

[FR Doc. 03–2366
Filed 1–29–03; 9:52 am]
Billing code 3195–01–P

Reader Aids

Federal Register

Vol. 68, No. 20

Thursday, January 30, 2003

CUSTOMER SERVICE AND INFORMATION

Federal Register/Code of Federal Regulations	
General Information, indexes and other finding aids	**202–741–6000**
Laws	**741–6000**
Presidential Documents	
Executive orders and proclamations	**741–6000**
The United States Government Manual	**741–6000**
Other Services	
Electronic and on-line services (voice)	**741–6020**
Privacy Act Compilation	**741–6064**
Public Laws Update Service (numbers, dates, etc.)	**741–6043**
TTY for the deaf-and-hard-of-hearing	**741–6086**

ELECTRONIC RESEARCH

World Wide Web

Full text of the daily Federal Register, CFR and other publications is located at: **http://www.access.gpo.gov/nara**

Federal Register information and research tools, including Public Inspection List, indexes, and links to GPO Access are located at: **http://www.archives.gov/federal__register/**

E-mail

FEDREGTOC-L (Federal Register Table of Contents LISTSERV) is an open e-mail service that provides subscribers with a digital form of the Federal Register Table of Contents. The digital form of the Federal Register Table of Contents includes HTML and PDF links to the full text of each document.

To join or leave, go to **http://listserv.access.gpo.gov** and select *Online mailing list archives, FEDREGTOC-L, Join or leave the list (or change settings);* then follow the instructions.

PENS (Public Law Electronic Notification Service) is an e-mail service that notifies subscribers of recently enacted laws.

To subscribe, go to **http://hydra.gsa.gov/archives/publaws-l.html** and select *Join or leave the list* (or change settings); then follow the instructions.

FEDREGTOC-L and **PENS** are mailing lists only. We cannot respond to specific inquiries.

Reference questions. Send questions and comments about the Federal Register system to: **info@fedreg.nara.gov**

The Federal Register staff cannot interpret specific documents or regulations.

FEDERAL REGISTER PAGES AND DATE, JANUARY

1–254 2
255–458 3
459–662 6
663–994 7
995–1142 8
1143–1358 9
1359–1512 10
1513–1792 13
1793–1954 14
1955–2174 15
2175–2408 16
2409–2678 17
2679–2868 21
2869–3162 22
3163–3370 23
3371–3802 24
3803–4074 27
4075–4360 28
4361–4680 29
4681–4888 30

CFR PARTS AFFECTED DURING JANUARY

At the end of each month, the Office of the Federal Register publishes separately a List of CFR Sections Affected (LSA), which lists parts and sections affected by documents published since the revision date of each title.

3 CFR

Proclamations:
6641 (See Proc. 7641) 3163
7636 995
7637 1951
7638 2173
7639 2409
7640 2869
7641 3163
7642 3169
7643 4887

Executive orders:
10865 (Amended by 13284) 4075
11423 (Amended by 13284) 4075
11958 (Amended by 13284) 4075
12260 (Amended by 13284) 4075
12333 (See EO 13283) 3371
12333 (Amended by 13284) 4075
12543 (See Notice of January 2, 2003) 661
12544 (See Notice of January 2, 2003) 661
12590 (Amended by 13284) 4075
12829 (See 13284) 4075
12859 (Amended by 13284) 4075
12881 (Amended by 13284) 4075
12947 (Continued by Notice of January 20, 2003) 3161
12958 (See 13284) 4075
12968 (See 13284) 4075
12992 (Amended by 13284) 4075
13011 (Amended by 13284) 4075
13048 (Amended by 13284) 4075
13099 (Continued by Notice of January 20, 2003) 3161
13122 (Amended by 13284) 4075
13151 (Amended by 13284) 4075
13224 (Amended by 13284) 4075
13228 (Amended by 13284) 4075
13231 (Amended by 13284) 4075
13234 (Amended by 13284) 4075
13249 (Superseded by 13282) 1133
13282 1133
13283 3371
13284 4075

Administrative orders:
Memorandums:
Memorandum of January 17, 2003 3157
Notices:
Notice of January 2, 2003 661
Notice of January 20, 2003 3161

Presidential Determinations:
No. 2003-09 of January 7, 2003 1513
No. 2003-10 of January 10, 2003 2411
No. 2003-11 of January 10, 2003 2419
No. 2003-12 of January 17, 2003 3803

5 CFR

532 ..... 459, 460, 1515
550 4681
831 2175
837 2175
842 2175
843 2175
844 2175
847 2175
2641 4681

Proposed Rules:
735 1987
2606 2923

6 CFR

Ch. 1 4056
5 4056
7 4056

7 CFR

97 1359
301 ..... 1360, 2679, 3373
318 2681
319 ..... 2681, 2684
354 3375
905 4361
906 1362
989 ..... 1143, 4079, 4085
996 1145
997 1145
998 1145
999 1145
1208 ..... 1364, 2108
1738 4684

Proposed Rules:
56 1169
300 69
723 1556
1464 1556

1794 1988
1951 1170
1962 1170
1965 1170

8 CFR

103 3798
236 4364
241 4364
286 4090
Proposed Rules:
217 292
231 292
251 292

9 CFR

82 ....1515, 3375
317 460
381 460
Proposed Rules:
Ch. 1 2703
71 3826
94 2711

10 CFR

72 ....463, 2686

11 CFR

100 ....404, 421, 3970
101 3970
102 421
104 ....404, 611, 2871, 3970
105 404
108 404
109 ....404, 421
110 ....421, 1793, 2871, 3970
114 421
116 3970
400 3970
9035 3970

12 CFR

201 1793
208 4092
211 1158
550 2108
563 1218
Proposed Rules:
19 1116
24 1394
263 1116
308 1116
513 1116
1730 3194

14 CFR

1 ....1955, 3096
21 ....1512, 2183
23 ....1, 3
25 ....255, 1955, 3096
29 2183
36 ....1512, 2402
39 ....5, 10, 14, 16, 18, 23, 25, 27, 28, 31, 35, 257, 471, 473, 476, 479, 481, 483, 485, 486, 488, 997, 999, 1001, 1517, 1519, 1521, 1523, 1525, 1528, 1955, 1961, 2687, 2872, 3171, 3377, 3379, 3805, 3808, 4096, 4367, 4370, 4371, 4374, 4378
61 ....39, 3772
63 3772
65 3772
71 ....43, 44, 259, 260, 261, 262, 263, 490, 1657, 2185, 2186, 2187, 2421, 2422, 2423, 24247, 2875, 3808, 3934, 4097
73 ....3173, 3174
91 1512
97 ....264, 491, 1794, 1955, 1962, 3096, 3809, 3810
Proposed Rules:
25 1932
39 ....71, 302, 305, 308, 311, 315, 317, 320, 322, 324, 516, 518, 1016, 1017, 1566, 1802, 1805, 2714, 3475, 3826, 3829, 3832, 3836, 4116, 4398, 4725, 4727, 4730, 4731, 4737, 4739
71 ....328, 2460, 2461, 2462, 2463, 3196, 3778, 3837, 3934, 4555, 4741, 4742
73 ....3198, 4118
91 3778
95 3778
121 ....1942, 3778
125 3778
129 3778
135 3778
158 1807
255 1172
399 1172

15 CFR

6 4380
270 4693
744 1796
774 1796
806 ....1531, 3811
902 ....204, 2188, 2636

16 CFR

303 3813
310 4580
801 2425
803 2425
1500 4697
Proposed Rules:
Ch. 1 2465

17 CFR

210 4862
228 4820
229 4820
230 188
240 ....188, 4338
244 4820
245 4338
249 ....4338, 4820
270 3142
420 402
Proposed Rules:
4 2254
210 160
228 2638
229 2638
239 160
240 2638
249 ....160, 2638
270 160
274 ....160, 2638

18 CFR

Ch. 1 45
260 266
357 266
385 266
390 1964
1301 4699
Proposed Rules:
35 ....3842, 4401
157 4120

19 CFR

4 1801
101 3381
201 3175
Proposed Rules:
101 1172
103 1173

20 CFR

404 4700

21 CFR

207 2689
510 ....1161, 4712
520 3816
524 ....3817, 4712
807 2689
1271 2689
1308 1964
Proposed Rules:
1 1568
1308 4127

23 CFR

450 3176
Proposed Rules:
970 1080
971 1088
972 1096
973 ....1105, 4744

24 CFR

401 3362
2004 3366
Proposed Rules:
25 1766
92 648
203 1766
570 648
572 648
574 648
576 648
582 648
583 648
585 648

25 CFR

170 1003
Proposed Rules:
Ch. 1 2465

26 CFR

1 ....1534, 3384
301 ....2691, 2695
602 ....1534, 2695
Proposed Rules:
1 ....1020, 2466, 2930, 3477

27 CFR

46 3744
47 3744
55 3744
178 3744
179 3744
447 3744
478 3744
479 3744
555 3744
646 3744
Proposed Rules:
9 ....1020, 2262, 3199
55 ....4402, 4406

28 CFR

2 3389
16 3392
Proposed Rules:
16 3847

29 CFR

2520 3716
2560 3729
2570 3729
2575 2875
4022 1965
4044 1965
Proposed Rules:
1910 ....1023, 1399
1915 ....1023, 1808
1926 1023
2550 992

30 CFR

18 2879
250 45
917 ....2196, 2199
936 2447
Proposed Rules:
18 2941
75 3936
250 1808
901 2263
916 2265
920 2268
938 721
944 521

31 CFR

103 493
321 2666
351 2666
352 2666
353 2666
359 2666
360 2666
Proposed Rules:
103 2716
501 4422
515 4422

32 CFR

700 2697

33 CFR

117 ....1366, 2201, 2883, 2884, 3181, 3183, 4382
147 ....4098, 4100
165 ....1005, 1162, 1967, 2201, 2451, 2884, 2886, 3185, 3187, 3395, 3397, 3399, 4383
Proposed Rules:
110 4130
151 523
165 2946
328 1991
334 ....1790, 1791

34 CFR

200 1008

36 CFR

Proposed Rules:
7 2466

251....2948
261....2948
295....2948

37 CFR

Proposed Rules:
260....4744

38 CFR

17....1009, 2670, 3401

Proposed Rules:
3....2476, 4132

39 CFR

111....4713
501....2697
3001....46

Proposed Rules:
111....530
3001....2272

40 CFR

9....848
22....2203
50....614
52....663, 1366, 1370, 1970, 1972, 2204, 2206, 2208, 2211, 2217, 2454, 2891, 2909, 2912, 3190, 3404, 3817
62....48, 50, 52, 53, 4103
63....2227
69....1162
70....1974
81....1370, 1657, 2217, 3410, 4836
82....238, 2820, 4004, 4385
112....1348, 4385
180....269, 274, 283, 2242, 3425, 4385
268....4392
271....3429
312....3430
300....1537, 2247, 2699
710....848
723....848
1610....4392

Proposed Rules:
Ch. 1....3786
52....723, 1414, 1998, 2275, 2276, 2476, 2722, 2953, 2954, 2969, 3202, 3478, 3847, 3848, 4141, 4842, 4847
55....1570
61....3848
62....76, 77, 3848, 4158
63....77, 78, 329, 1276, 1660, 1888, 2110, 2276, 2970
69....1175
81....1414, 4847
82....4012
110....1991
112....1352, 1991
116....1991
117....1991
122....1991
180....1575
230....1991
232....1991
258....2276
260....2276
261....531, 2276
264....2276
265....2276
266....2276
270....2276
271....2276
279....2276
281....329
300....1580, 1991, 2277, 2726, 4429
312....3478
401....1991

41 CFR

102-75....1167
Ch. 301....196
301-10....493, 2402

42 CFR

403....1374
416....1374
418....1374
433....3586
438....3586
460....1374
482....1374, 3435
483....1374
485....1374
493....3640

Proposed Rules:
Ch. IV....3482

43 CFR

1860....494

44 CFR

65....1540, 1543
67....1547, 1549, 1550, 2477, 2479

Proposed Rules:
67....1581, 1585

46 CFR

Proposed Rules:
401....3202

47 CFR

0....4105
2....3455
20....2252, 2914
21....3455
54....4105
73....503, 504, 670, 1554, 1555, 1985, 1986, 2700, 2701, 3819, 4107, 4393
76....670
101....3455

Proposed Rules:
Ch. 1....723, 730
15....2730
20....3214
2....1999
73....532, 533, 1586, 1587, 1657, 2278, 2733, 2734, 4158
76....1657, 2278
90....1999

48 CFR

Chap. 1....4051
2....4048
10....4048
12....4048
13....4048
19....4048
25....4048
801....3465
806....3465
812....3465
837....3465
852....3465
873....3465
904....55
952....55
970....55

Proposed Rules:
2....4874, 4876
12....4874
31....4054, 4876, 4880
52....4874, 4880
505....1358
532....3220
538....3220
552....3220
1151....2988
1152....2988

49 CFR

107....13425
192....56
195....56
219....57
383....4394
571....504, 2993, 4107
579....4111
590....4107
1420....4718
1510....3192
1540....3756, 3762

Proposed Rules:
10....2002
171....1013, 2734
172....2734
173....2734
177....2734
178....2734
179....2734
180....2734
192....4278
571....2003, 2480

50 CFR

17....1220, 2919
20....1388
300....1392
622....2188
635....711
648....57, 60, 533, 2919, 4113
660....908, 3819, 4719
679....715, 1392, 2636, 2920, 2921, 2922, 3823, 3824, 4115

Proposed Rules:
216....4747
17....331, 2283, 3000, 4159, 4160
18....1175
216....3483
223....4433
224....4433
229....1414
402....3786
600....4161
635....1024, 1430, 3853
648....1587, 2303
660....936, 4162, 4441
679....3225, 3485

REMINDERS

The items in this list were editorially compiled as an aid to Federal Register users. Inclusion or exclusion from this list has no legal significance.

RULES GOING INTO EFFECT JANUARY 30, 2003

AGRICULTURE DEPARTMENT

Rural Utilities Service

Broadband loans:

Rural Broadband Access Loan and Loan Guarantee Program; published 1-30-03

COMMERCE DEPARTMENT

National Institute of Standards and Technology

National Construction Safety Team Act; implementation; published 1-30-03

COMMERCE DEPARTMENT

National Oceanic and Atmospheric Administration

Fishery conservation and management:

West Coast States and Western Pacific fisheries—

Coastal pelagic species; published 12-31-02

CONSUMER PRODUCT SAFETY COMMISSION

Federal Hazardous Substances Act:

Model rocket propellant devices used with lightweight surface vehicles; exemptions; published 1-30-03

ENVIRONMENTAL PROTECTION AGENCY

Air programs:

Stratospheric ozone protection—

Montreal Protocol; decisions incorporation and petition criteria reconsideration; published 12-31-02

Air quality planning purposes; designation of areas:

Missouri and Illinois; published 1-30-03

FEDERAL COMMUNICATIONS COMMISSION

Radio stations; table of assignments:

Georgia; published 1-6-03

Indiana; published 1-6-03

Minnesota and North Dakota; published 1-13-03

GOVERNMENT ETHICS OFFICE

Government Ethics:

Post-employment conflict of interest restrictions; departmental component designations revision; published 1-30-03

HEALTH AND HUMAN SERVICES DEPARTMENT

Food and Drug Administration

Animal drugs, feeds, and related products:

Ivermectin pour-on; published 1-30-03

NUCLEAR REGULATORY COMMISSION

Federal Advisory Committee Act regulations; published 12-31-02

POSTAL SERVICE

Domestic Mail Manual:

Outside-country periodicals co-palletization drop-ship classification; experimental testing; published 1-30-03

SOCIAL SECURITY ADMINISTRATION

Social security benefits:

Federal old age, survivors, and disability insurance—

Changes in retirement age; published 1-30-03

TENNESSEE VALLEY AUTHORITY

Freedom of Information Act; implementation; published 1-30-03

TRANSPORTATION DEPARTMENT

Federal Aviation Administration

Airworthiness directives:

Bell; published 1-15-03

Honeywell; published 1-15-03

TRANSPORTATION DEPARTMENT

Transportation Statistics Bureau

Motor carrier reports:

Obsolete references and clarifications; published 1-30-03

COMMENTS DUE NEXT WEEK

AGRICULTURE DEPARTMENT

Animal and Plant Health Inspection Service

Exportation and importation of animals and animal products:

Horse importation quarantine facilities; stall reservations; comments due by 2-7-03; published 12-9-02 [FR 02-31009]

AGRICULTURE DEPARTMENT

Food Safety and Inspection Service

Meat and poultry inspection:

Food labeling—

Nutrient content claims; definition of term healthy; comments due by 2-5-03; published 1-6-03 [FR 02-33150]

COMMERCE DEPARTMENT

National Oceanic and Atmospheric Administration

Fishery conservation and management:

Alaska; fisheries of Exclusive Economic Zone—

Cape Sarichef waters; seasonal area closure to trawl, pot, and hook-and-line fishing; comments due by 2-7-03; published 1-23-03 [FR 03-01466]

Atlantic highly migratory species—

Atlantic bluefin tuna; comments due by 2-7-03; published 1-8-03 [FR 03-00323]

Bluefin tuna; comments due by 2-7-03; published 12-24-02 [FR 02-32431]

COMMERCE DEPARTMENT

National Oceanic and Atmospheric Administration

Fishery conservation and management:

West Coast States and Western Pacific fisheries—

Pacific Coast groundfish; comments due by 2-6-03; published 1-7-03 [FR 02-32755]

COMMERCE DEPARTMENT

National Oceanic and Atmospheric Administration

Fishery conservation and management:

West Coast States and Western Pacific fisheries—

Pacific Coast groundfish; comments due by 2-6-03; published 1-7-03 [FR 02-32756]

COMMERCE DEPARTMENT

National Oceanic and Atmospheric Administration

Marine mamals:

Incidental taking—

Southern California; drift gillnet fishing prohibition; loggerhead sea turtles; comments due by 2-7-03; published 12-24-02 [FR 02-32302]

ENVIRONMENTAL PROTECTION AGENCY

Air pollutants, hazardous; national emission standards:

Automobile and light-duty truck surface coating operations; comments due by 2-7-03; published 12-24-02 [FR 02-31420]

Plastic parts and products surface coating operations; comments due by 2-3-03; published 12-4-02 [FR 02-29073]

Air programs; approval and promulgation; State plans for designated facilities and pollutants:

Delaware, District of Columbia, and Pennsylvania; comments due by 2-3-03; published 1-2-03 [FR 02-33097]

ENVIRONMENTAL PROTECTION AGENCY

Air programs; approval and promulgation; State plans for designated facilities and pollutants:

Delaware, District of Columbia, and Pennsylvania; comments due by 2-3-03; published 1-2-03 [FR 02-33094]

Delaware, District of Columbia, Pennsylvania; comments due by 2-3-03; published 1-2-03 [FR 02-33096]

ENVIRONMENTAL PROTECTION AGENCY

Air programs; approval and promulgation; State plans for desnated facilities and pollutants:

Delaware, District of Columbia, Pennsylvania; comments due by 2-3-03; published 1-2-03 [FR 02-33095]

ENVIRONMENTAL PROTECTION AGENCY

Air programs; approval and promulgation; State plans for designated facilities and pollutants:

District of Columbia; comments due by 2-3-03; published 1-2-03 [FR 02-33098]

ENVIRONMENTAL PROTECTION AGENCY

Air programs; approval and promulgation; State plans foir designated facilities and pollutants:

District of Columbia; comments due by 2-3-03;

published 1-2-03 [FR 02-33099]

ENVIRONMENTAL PROTECTION AGENCY

Air programs; approval and promulgation; State plans for designated facilities and pollutants:

District of Columbia and Pennsylvania; comments due by 2-3-03; published 1-2-03 [FR 02-33100]

ENVIRONMENTAL PROTECTION AGENCY

Air programs; approval and promulgation; State plans for designated facilities and pollutants:

District of Columbia and Pennsylvania; comments due by 2-3-03; published 1-2-03 [FR 02-33101]

ENVIRONMENTAL PROTECTION AGENCY

Air quality implementation plans; approval and promulgation; various States:

Virginia; comments due by 2-6-03; published 1-7-03 [FR 03-00093]

ENVIRONMENTAL PROTECTION AGENCY

Air quality implementation plans; approval and promulgation; various States:

Virginia; comments due by 2-6-03; published 1-7-03 [FR 03-00094]

Hazardous waste:

Identification and listing—

Exclusions; comments due by 2-6-03; published 1-6-03 [FR 03-00174]

ENVIRONMENTAL PROTECTION AGENCY

Pesticides; tolerances in food, animal feeds, and raw agricultural commodities:

Antimicrobial formulations; comments due by 2-3-03; published 12-3-02 [FR 02-30473]

ENVIRONMENTAL PROTECTION AGENCY

Pesticides; tolerances in food, animal feeds, and raw agricultural commodities:

Carboxin; comments due by 2-7-03; published 12-9-02 [FR 02-31010]

FEDERAL COMMUNICATIONS COMMISSION

Common carrier services:

Commercial mobile radio services—

Basic and enhanced 911 provision by currently exempt wireless and wireline services; comments due by 2-3-03; published 1-23-03 [FR 03-01458]

Wireless telecommunications services—

Advanced wireless services; service rules; comments due by 2-7-03; published 12-23-02 [FR 02-32213]

Digital television stations; table of assignments:

Wyoming; comments due by 2-3-03; published 12-23-02 [FR 02-32284]

Practice and procedure:

Spectrum-based services provision to rural areas and opportunities for rural telephone companies to provide these services; comments due by 2-3-03; published 1-7-03 [FR 03-00219]

FEDERAL EMERGENCY MANAGEMENT AGENCY

Disaster assistance:

National Urban Search and Rescue Response System; financing, administration, and operation standardization; comments due by 2-3-03; published 12-18-02 [FR 02-31658]

FEDERAL RESERVE SYSTEM

Practice and procedure:

Accountants performing audit services; removal, suspension, and debarment; comments due by 2-7-03; published 1-8-03 [FR 03-00098]

HEALTH AND HUMAN SERVICES DEPARTMENT

Food and Drug Administration

Animal drugs, feeds, and related products:

Ruminant feed; animal proteins prohibition; comments due by 2-4-03; published 11-6-02 [FR 02-28373]

HEALTH AND HUMAN SERVICES DEPARTMENT

Exchange Visitor Program:

Two-year foreign residence requirement; waiver request; comments due by 2-3-03; published 12-19-02 [FR 02-31972]

HEALTH AND HUMAN SERVICES DEPARTMENT

Federal claims collection:

Tax refund offset; comments due by 2-3-03; published 12-4-02 [FR 02-30657]

HEALTH AND HUMAN SERVICES DEPARTMENT

Inspector General Office, Health and Human Services Department

Medicare and medicaid beneficiaries; civil monetary penalty prohibition; comments due by 2-7-03; published 12-9-02 [FR 02-31040]

Safe harbor and special fraud alerts; comments due by 2-7-03; published 12-9-02 [FR 02-31039]

INTERIOR DEPARTMENT

Fish and Wildlife Service

Endangered and threatened species:

Florida manatee; protection areas; comments due by 2-6-03; published 11-8-02 [FR 02-28279]

Mountain plover; comments due by 2-3-03; published 12-5-02 [FR 02-30801]

INTERIOR DEPARTMENT

Surface Mining Reclamation and Enforcement Office

Permanent program and abandoned mine land reclamation plan submissions:

Pennsylvania; comments due by 2-6-03; published 1-7-03 [FR 03-00157]

Utah; comments due by 2-5-03; published 1-6-03 [FR 03-00158]

JUSTICE DEPARTMENT

Immigration and Naturalization Service

Enhanced Border Security and Visa Entry Reform Act of 2002; implementation:

Arrival and departure manifests; advance electronic submission requirements; comments due by 2-3-03; published 1-3-03 [FR 02-33145]

LABOR DEPARTMENT

Employment and Training Administration

Birth and adoption unemployment compensation; CFR part removal proposed; comments due by 2-3-03; published 12-4-02 [FR 02-30316]

LIBRARY OF CONGRESS

Copyright Office, Library of Congress

Copyright office and procedures:

Transfers and licenses of copyright granted after 1977; notices of termination; comments due by 2-3-03; published 12-20-02 [FR 02-32136]

NATIONAL AERONAUTICS AND SPACE ADMINISTRATION

Grant and Cooperative Agreement Handbook:

Unclassified information technology resources; security requirements; comments due by 2-3-03; published 12-4-02 [FR 02-30652]

NATIONAL CREDIT UNION ADMINISTRATION

Credit unions:

Organization and operations—

Chartering and field of membership policies; update; comments due by 2-3-03; published 12-5-02 [FR 02-30400]

Organization, functions, and authority delegations:

Government regulations; development and review; small entity definition; interpretive ruling and policy statement; comments due by 2-3-03; published 12-4-02 [FR 02-30090]

POSTAL SERVICE

Domestic Mail Manual:

Apartment house mailboxes; design standards; Consensus Committee establishment and meeting; comments due by 2-5-03; published 1-6-03 [FR 03-00139]

SMALL BUSINESS ADMINISTRATION

Business loans:

Certified Development Company Loan Program; comments due by 2-4-03; published 12-6-02 [FR 02-30905]

TRANSPORTATION DEPARTMENT

Coast Guard

Drawbridge operations:

Florida; comments due by 2-3-03; published 12-4-02 [FR 02-30739]

Ports and waterways safety:

San Pedro Bay, CA; liquefied hazardous gas tank vessels; security zones; comments due by 2-7-03; published 12-27-02 [FR 02-32722]

TRANSPORTATION DEPARTMENT

Federal Aviation Administration

Air carrier certification and operations:

Aging airplane safety; inspections and records reviews; comments due by 2-4-03; published 12-6-02 [FR 02-30111]

TRANSPORTATION DEPARTMENT

Federal Aviation Administration

Air carrier certification and operations:

Fuel tank system safety assessments; comments due by 2-7-03; published 12-9-02 [FR 02-30997]

TRANSPORTATION DEPARTMENT

Federal Aviation Administration

Airworthiness directives:

Airbus; comments due by 2-3-03; published 1-3-03 [FR 03-00025]

TRANSPORTATION DEPARTMENT

Federal Aviation Administration

Airworthiness directives:

Boeing; comments due by 2-3-03; published 12-3-02 [FR 02-30344]

TRANSPORTATION DEPARTMENT

Federal Aviation Administration

Airworthiness directives:

Boeing; comments due by 2-7-03; published 1-3-03 [FR 03-00023]

TRANSPORTATION DEPARTMENT

Federal Aviation Administration

Airworthiness directives:

Bombardier; comments due by 2-3-03; published 1-2-03 [FR 02-32878]

Dornier; comments due by 2-3-03; published 1-2-03 [FR 02-32879]

TRANSPORTATION DEPARTMENT

Federal Aviation Administration

Airworthiness directives:

Rolls-Royce Deutschland Ltd.; comments due by 2-3-03; published 12-3-02 [FR 02-30345]

TRANSPORTATION DEPARTMENT

Federal Aviation Administration

Airworthiness standards:

Special conditions—

Raytheon Aircraft Co. Model HS.125 Series 700A airplanes; comments due by 2-3-03; published 1-3-03 [FR 03-00063]

TRANSPORTATION DEPARTMENT

Federal Aviation Administration

Airworthiness standards:

Special conditions—

Raytheon Aircraft Model B300/B300C; comments due by 2-3-03; published 1-2-03 [FR 02-33126]

TRANSPORTATION DEPARTMENT

Federal Aviation Administration

Class E airspace; comments due by 2-3-03; published 1-3-03 [FR 03-00068]

TRANSPORTATION DEPARTMENT

Research and Special Programs Administration

Hazardous materials:

Hazardous materials transportation—

Harmonization with UN recommendations, International Maritime Dangerous Goods Code, and International Civil Aviation Organization's technical instructions; comments due by 2-3-03; published 12-3-02 [FR 02-29897]

TREASURY DEPARTMENT

Internal Revenue Service

Procedure and administration:

User fees; compromise offer processing; comments due by 2-4-03; published 11-6-02 [FR 02-28249]

LIST OF PUBLIC LAWS

This is a continuing list of public bills from the current session of Congress which have become Federal laws. It may be used in conjunction with ''P L U S'' (Public Laws Update Service) on 202–741–6043. This list is also available online at *http://www.nara.gov/fedreg/plawcurr.html*.

The text of laws is not published in the **Federal Register** but may be ordered in ''slip law'' (individual pamphlet) form from the Superintendent of Documents, U.S. Government Printing Office, Washington, DC 20402 (phone, 202–512–1808). The text will also be made available on the Internet from GPO Access at *http://www.access.gpo.gov/nara/nara005.html*. Some laws may not yet be available.

H.R. 11/P.L. 108–3

National Flood Insurance Program Reauthorization Act of 2003 (Jan. 13, 2003; 117 Stat. 7)

Last List January 14, 2003

Public Laws Electronic Notification Service (PENS)

PENS is a free electronic mail notification service of newly enacted public laws. To subscribe, go to *http://hydra.gsa.gov/archives/publaws-l.html* or send E-mail to **listserv@listserv.gsa.gov** with the following text message:

SUBSCRIBE PUBLAWS-L Your Name.

Note: This service is strictly for E-mail notification of new laws. The text of laws is not available through this service. **PENS** cannot respond to specific inquiries sent to this address.