AUTHENTICATED
U.S. GOVERNMENT
INFORMATION
GPO

Federal Register

1–21–03 Tuesday
Vol. 68 No. 13 Jan. 21, 2003
Pages 2679–2868

The **FEDERAL REGISTER** is published daily, Monday through Friday, except official holidays, by the Office of the Federal Register, National Archives and Records Administration, Washington, DC 20408, under the Federal Register Act (44 U.S.C. Ch. 15) and the regulations of the Administrative Committee of the Federal Register (1 CFR Ch. I). The Superintendent of Documents, U.S. Government Printing Office, Washington, DC 20402 is the exclusive distributor of the official edition.

The **Federal Register** provides a uniform system for making available to the public regulations and legal notices issued by Federal agencies. These include Presidential proclamations and Executive Orders, Federal agency documents having general applicability and legal effect, documents required to be published by act of Congress, and other Federal agency documents of public interest.

Documents are on file for public inspection in the Office of the Federal Register the day before they are published, unless the issuing agency requests earlier filing. For a list of documents currently on file for public inspection, see http://www.nara.gov/fedreg.

The seal of the National Archives and Records Administration authenticates the Federal Register as the official serial publication established under the Federal Register Act. Under 44 U.S.C. 1507, the contents of the **Federal Register** shall be judicially noticed.

The **Federal Register** is published in paper and on 24x microfiche. It is also available online at no charge as one of the databases on GPO Access, a service of the U.S. Government Printing Office.

The online edition of the **Federal Register** is issued under the authority of the Administrative Committee of the Federal Register as the official legal equivalent of the paper and microfiche editions (44 U.S.C. 4101 and 1 CFR 5.10). It is updated by 6 a.m. each day the **Federal Register** is published and it includes both text and graphics from Volume 59, Number 1 (January 2, 1994) forward.

GPO Access users can choose to retrieve online **Federal Register** documents as TEXT (ASCII text, graphics omitted), PDF (Adobe Portable Document Format, including full text and all graphics), or SUMMARY (abbreviated text) files. Users should carefully check retrieved material to ensure that documents were properly downloaded.

On the World Wide Web, connect to the **Federal Register** at http://www.access.gpo.gov/nara. Those without World Wide Web access can also connect with a local WAIS client, by Telnet to swais.access.gpo.gov, or by dialing (202) 512–1661 with a computer and modem. When using Telnet or modem, type swais, then log in as guest with no password.

For more information about GPO Access, contact the GPO Access User Support Team by E-mail at gpoaccess@gpo.gov; by fax at (202) 512–1262; or call (202) 512–1530 or 1–888–293–6498 (toll free) between 7 a.m. and 5 p.m. Eastern time, Monday–Friday, except Federal holidays.

The annual subscription price for the **Federal Register** paper edition is $699, or $764 for a combined **Federal Register, Federal Register** Index and List of CFR Sections Affected (LSA) subscription; the microfiche edition of the **Federal Register** including the **Federal Register** Index and LSA is $264. Six month subscriptions are available for one-half the annual rate. The charge for individual copies in paper form is $10.00 for each issue, or $10.00 for each group of pages as actually bound; or $2.00 for each issue in microfiche form. All prices include regular domestic postage and handling. International customers please add 25% for foreign handling. Remit check or money order, made payable to the Superintendent of Documents, or charge to your GPO Deposit Account, VISA, MasterCard or Discover. Mail to: New Orders, Superintendent of Documents, P.O. Box 371954, Pittsburgh, PA 15250–7954.

There are no restrictions on the republication of material appearing in the **Federal Register.**

How To Cite This Publication: Use the volume number and the page number. Example: 68 FR 12345.

SUBSCRIPTIONS AND COPIES

PUBLIC

Subscriptions:

Paper or fiche	**202–512–1800**
Assistance with public subscriptions	**202–512–1806**

General online information **202–512–1530; 1–888–293–6498**

Single copies/back copies:

Paper or fiche	**202–512–1800**
Assistance with public single copies	**1–866–512–1800 (Toll-Free)**

FEDERAL AGENCIES

Subscriptions:

Paper or fiche	**202–741–6005**
Assistance with Federal agency subscriptions	**202–741–6005**

What's NEW!

Federal Register Table of Contents via e-mail

Subscribe to FEDREGTOC, to receive the **Federal Register** Table of Contents in your e-mail every day.

If you get the HTML version, you can click directly to any document in the issue.

To subscribe, go to **http://listserv.access.gpo.gov** and select:

Online mailing list archives
FEDREGTOC-L
Join or leave the list

Then follow the instructions.

Printed on recycled paper.

Contents

Federal Register

Vol. 68, No. 13

Tuesday, January 21, 2003

Agriculture Department
See Animal and Plant Health Inspection Service
See Food and Nutrition Service
See Natural Resources Conservation Service
See Rural Business-Cooperative Service

Animal and Plant Health Inspection Service
RULES
Hawaiian and territorial quarantine notices; and plant-related quarantine, foreign:
Fruits and vegetables; movement and importation, 2681–2684
Plant-related quarantine, domestic:
Mexican fruit fly, 2679–2680
Plant-related quarantine, foreign:
Corpus Christi, TX; fresh fruits; cold treatment, 2684–2686
PROPOSED RULES
Exportation and importation of animals and animal products:
Downer cattle and dead stock of cattle and other species; potential bovine spongiform encephalopathy pathways; risk reduction strategies, 2703–2711
Pork and pork products imported from regions affected with swine vesicular disease; pork-filled pasta, 2711–2714

Centers for Disease Control and Prevention
NOTICES
Agency information collection activities:
Proposed collection; comment request, 2777–2778
Submission for OMB review; comment request, 2778–2780
Grants and cooperative agreements; availability, etc.:
National Cancer Prevention and Control Program, 2780–2783

Centers for Medicare & Medicaid Services
See Inspector General Office, Health and Human Services Department

Commerce Department
See International Trade Administration
See National Oceanic and Atmospheric Administration

Comptroller of the Currency
NOTICES
Agency information collection activities:
Submission for OMB review; comment request, 2815–2816

Defense Department
See Navy Department

Education Department
NOTICES
Grants and cooperative agreements; availability, etc.:
Elementary and secondary education—
State Flexibility Program, 2753–2754

Energy Department
See Federal Energy Regulatory Commission
NOTICES
Electricity export and import authorizations, permits, etc,:
NorthPoint Energy Solutions Inc., 2754–2755

Environmental Protection Agency
RULES
Air programs:
Stratospheric ozone protection—
Hydrochlorofluorocarbons (HCFCs); production and consumption control; allowance system, 2819–2863
Superfund program:
National oil and hazardous substances contingency plan—
National priorities list update, 2699–2700
PROPOSED RULES
Air quality implementation plans; approval and promulgation; various States:
Connecticut, 2722–2726
Superfund program:
National oil and hazardous substances contingency plan—
National priorities list update, 2726–2730
NOTICES
Air pollution control:
State operating permits programs—
New York, 2763–2765
Meetings:
Science Advisory Board, 2765
Superfund; response and remedial actions, proposed settlements, etc.:
Jack Goins Waste Oil Site, TN, 2766
Superfund program:
Federal Agency Hazardous Waste Compliance Docket; Federal facilities; list update; correction, 2814

Federal Aviation Administration
RULES
Airworthiness directives:
MD Helicopters, Inc., 2687–2689
PROPOSED RULES
Airworthiness directives:
Eurocopter France, 2714–2715
NOTICES
Antidrug and alcohol misuse prevention programs for personnel engaged in specified aviation activities:
Random alcohol and drug testing; minimum annual percentage rates, 2813

Federal Communications Commission
RULES
Digital television stations; table of assignments:
Arkansas, 2700–2701
Georgia, 2701
North Carolina, 2701
Radio stations; table of assignments:
Various States, 2701–2702
PROPOSED RULES
Radio frequency devices:
Unlicensed devices operating in additional frequency bands; feasibility, 2730–2733
Radio stations; table of assignments:
Hawaii, 2733–2734

Texas, 2734
NOTICES
Agency information collection activities:
Proposed collection; comment request, 2766–2769
Common carrier services:
Federal-State Joint Board on Universal Service—
Schools and libraries; universal service support mechanism; review applications, 2769–2771
Meetings; Sunshine Act, 2771–2772
Privacy Act:
Systems of records, 2772–2774

Federal Energy Regulatory Commission
NOTICES
Electric rate and corporate regulation filings:
Calpine Energy Services, L.P., et al., 2757–2759
Hydroelectric applications, 2759–2763
Applications, hearings, determinations, etc.:
Alliance Pipeline L.P., 2755
Columbia Gulf Transmission Co., 2755
Crossroads Pipeline Co., 2756
MIGC, Inc., 2756
Tennessee Gas Pipeline Co., 2756–2757
Williston Basin Interstate Pipeline Co., 2757

Federal Highway Administration
NOTICES
Environmental statements; notice of intent:
Mills County, IA, and Cass and Sarpy Counties, NE, 2814
Mills County, IA, and Sarpy County, NE, 2813–2814

Federal Reserve System
NOTICES
Banks and bank holding companies:
Change in bank control, 2775
Formations, acquisitions, and mergers, 2775

Federal Retirement Thrift Investment Board
NOTICES
Meetings; Sunshine Act; correction, 2814

Federal Trade Commission
NOTICES
Prohibited trade practices:
Quicken Loans Inc., 2775–2776

Fish and Wildlife Service
PROPOSED RULES
Environmental statements; availability, etc.:
Incidental take permits—
El Paso County, CA; Preble's meadow jumping mouse, 2792–2793

Food and Drug Administration
RULES
Biological products:
Human cells, tissues, and cellular and tissue-based products; establishment registration and listing, 2689–2691
NOTICES
Agency information collection activities:
Reporting and recordkeeping requirements, 2783–2784
Debarment orders:
Fiddes, Robert A.; correction, 2784
Meetings:
Vaccine and Related Biological Products Advisory Committee, 2784

Food and Nutrition Service
NOTICES
Food distribution programs:
Donated beef and pork substitution with commercial beef and pork; demonstration project, 2748–2749

General Services Administration
NOTICES
Federal Management Regulation:
Federal facilities location in rural areas, 2776–2777

Health and Human Services Department
See Centers for Disease Control and Prevention
See Food and Drug Administration
See Inspector General Office, Health and Human Services Department
See National Institutes of Health

Housing and Urban Development Department
NOTICES
Agency information collection activities:
Proposed collection; comment request, 2790
Grants and cooperative agreements; availability, etc.:
Community development and affordable housing; capacity building, 2865–2868
Low income housing:
Housing assistance payments (Section 8)—
Operating cost adjustment factors, 2790–2792

Inspector General Office, Health and Human Services Department
NOTICES
Program exclusions; list, 2784–2787

Interior Department
See Fish and Wildlife Service
See Land Management Bureau

Internal Revenue Service
RULES
Procedure and administration:
Census Bureau; return information disclosure, 2691–2695
Returns and return information disclosure by other agencies, 2695–2696

International Trade Administration
NOTICES
Meetings:
Environmental Technologies Trade Advisory Committee, 2751

International Trade Commission
NOTICES
Import investigations:
Lawn and garden steel fence posts from—
China, 2794–2795

Land Management Bureau
NOTICES
Withdrawal and reservation of lands:
Alaska, 2793

Legal Services Corporation
NOTICES
Meetings; Sunshine Act, 2795

Maritime Administration
NOTICES
Agency information collection activities:
Submission for OMB review; comment request, 2814–2815

National Aeronautics and Space Administration
NOTICES
Meetings:
Advisory Council
Biological and Physical Research Advisory Committee, 2795
U.S. Centennial of Flight Commission, 2795–2796

National Credit Union Administration
NOTICES
Meetings; Sunshine Act, 2796

National Institutes of Health
NOTICES
Meetings:
National Cancer Institute, 2787–2788
National Institute of Neurological Disorders and Stroke, 2789
National Institute on Deafness and Other Communication Disorders, 2789
National Institute on Drug Abuse, 2788–2789
Reports and guidance documents; availability:
Drugs for which pediatric studies are needed; list, 2789–2790

National Oceanic and Atmospheric Administration
NOTICES
Permits:
Marine mammals, 2751–2753

Natural Resources Conservation Service
NOTICES
Environmental statements; availability, etc.:
West Fork Kickapoo River Watershed, WI, 2749–2750

Navy Department
RULES
Agency regulations; amendments, 2697
NOTICES
Meetings:
Naval Postgraduate School Board of Advisors to Superintendent, 2753

Nuclear Regulatory Commission
RULES
Spent nuclear fuel and high-level radioactive waste; independent storage; licensing requirements:
Approved spent fuel storage casks; list, 2686–2687
NOTICES
Meetings:
Reactor Safeguards Advisory Committee, 2810–2811
Source Term Modeling Peer Review Committee, 2811
Operating licenses, amendments; no significant hazards considerations; biweekly notices, 2796–2810

Postal Service
RULES
Postage meters:
Manufacture and distribution; authorization, 2697–2699

Public Health Service
See Centers for Disease Control and Prevention
See Food and Drug Administration
See National Institutes of Health

Research and Special Programs Administration
PROPOSED RULES
Hazardous materials:
Miscellaneous amendments, 2734–2747

Rural Business-Cooperative Service
NOTICES
Loan guarantee authority; maximum portion available (2003 FY), 2751

Securities and Exchange Commission
NOTICES
Meetings; Sunshine Act, 2811–2812

Small Business Administration
NOTICES
Disaster loan areas:
South Carolina, 2812

Transportation Department
See Federal Aviation Administration
See Federal Highway Administration
See Maritime Administration
See Research and Special Programs Administration
NOTICES
Aviation proceedings:
Certificates of public convenience and necessity and foreign air carrier permits; weekly applications, 2812–2813

Treasury Department
See Comptroller of the Currency
See Internal Revenue Service
PROPOSED RULES
Currency and foreign transactions; financial reporting and recordkeeping requirements:
Bank Secrecy Act; implementation—
Suspicious transactions; mutual funds reporting requirements, 2716–2721
NOTICES
Organization, functions, and authority delegations:
Payroll office to service District of Columbia's retired Superior Court and Court of Appeals justices, 2815

Veterans Affairs Department
NOTICES
Inventions, Government-owned; availability for licensing, 2816

Separate Parts In This Issue

Part II
Environmental Protection Agency, 2819–2863

Part III
Housing and Urban Development Department, 2865–2868

Reader Aids
Consult the Reader Aids section at the end of this issue for phone numbers, online resources, finding aids, reminders, and notice of recently enacted public laws.

To subscribe to the Federal Register Table of Contents LISTSERV electronic mailing list, go to http://listserv.access.gpo.gov and select Online mailing list archives, FEDREGTOC-L, Join or leave the list (or change settings); then follow the instructions.

CFR PARTS AFFECTED IN THIS ISSUE

A cumulative list of the parts affected this month can be found in the Reader Aids section at the end of this issue.

7 CFR
301.....2679
318.....2681
319 (2 documents) 2681, 2684

9 CFR
Proposed Rules:
Ch. I.....2703
94.....2711

10 CFR
72.....2686

14 CFR
39.....2687
Proposed Rules:
39.....2714

21 CFR
1271.....2689

26 CFR
301 (2 documents) 2691, 2695
602.....2695

31 CFR
Proposed Rules:
103.....2716

32 CFR
700.....2697

39 CFR
501.....2697

40 CFR
82.....2820
300.....2699
Proposed Rules:
52.....2722
300.....2726

47 CFR
73 (4 documents) 2700, 2701
Proposed Rules:
15.....2730
73 (2 documents) 2733, 2734

49 CFR
Proposed Rules:
171.....2734
172.....2734
173.....2734
177.....2734
178.....2734
179.....2734
180.....2734

Rules and Regulations

Federal Register
Vol. 68, No. 13
Tuesday, January 21, 2003

This section of the FEDERAL REGISTER contains regulatory documents having general applicability and legal effect, most of which are keyed to and codified in the Code of Federal Regulations, which is published under 50 titles pursuant to 44 U.S.C. 1510.

The Code of Federal Regulations is sold by the Superintendent of Documents. Prices of new books are listed in the first FEDERAL REGISTER issue of each week.

DEPARTMENT OF AGRICULTURE

Animal and Plant Health Inspection Service

7 CFR Part 301

[Docket No. 02–129–1]

Mexican Fruit Fly; Regulated Areas

AGENCY: Animal and Plant Health Inspection Service, USDA.

ACTION: Interim rule and request for comments.

SUMMARY: We are amending the Mexican fruit fly regulations by designating a portion of San Diego County, CA, as a regulated area and restricting the interstate movement of regulated articles from that area. This action is necessary to prevent the spread of the Mexican fruit fly into noninfested areas of the United States.

DATES: This interim rule was effective January 15, 2003. We will consider all comments that we receive on or before March 24, 2003.

ADDRESSES: You may submit comments by postal mail/commercial delivery or by e-mail. If you use postal mail/commercial delivery, please send four copies of your comment (an original and three copies) to: Docket No. 02–129–1, Regulatory Analysis and Development, PPD, APHIS, Station 3C71, 4700 River Road Unit 118, Riverdale, MD 20737–1238. Please state that your comment refers to Docket No. 02–129–1. If you use e-mail, address your comment to *regulations@aphis.usda.gov.* Your comment must be contained in the body of your message; do not send attached files. Please include your name and address in your message and ''Docket No. 02–129–1'' on the subject line.

You may read any comments that we receive on this docket in our reading room. The reading room is located in room 1141 of the USDA South Building, 14th Street and Independence Avenue SW., Washington, DC. Normal reading room hours are 8 a.m. to 4:30 p.m., Monday through Friday, except holidays. To be sure someone is there to help you, please call (202) 690–2817 before coming.

APHIS documents published in the **Federal Register**, and related information, including the names of organizations and individuals who have commented on APHIS dockets, are available on the Internet at *http://www.aphis.usda.gov/ppd/rad/webrepor.html.*

FOR FURTHER INFORMATION CONTACT: Mr. Stephen A. Knight, Senior Staff Officer, PPQ, APHIS, 4700 River Road Unit 134, Riverdale, MD 20737–1236; (301) 734–8247.

SUPPLEMENTARY INFORMATION:

Background

The Mexican fruit fly *(Anastrepha ludens)* is a destructive pest of citrus and many other types of fruit. The short life cycle of the Mexican fruit fly allows rapid development of serious outbreaks that can cause severe economic losses in commercial citrus-producing areas.

The Mexican fruit fly regulations, contained in 7 CFR 301.64 through 301.64–10 (referred to below as the regulations), were established to prevent the spread of the Mexican fruit fly to noninfested areas of the United States. The regulations impose restrictions on the interstate movement of regulated articles from the regulated areas.

Section 301.64–3 provides that the Deputy Administrator for Plant Protection and Quarantine, Animal and Plant Health Inspection Service (APHIS), shall list as a regulated area each quarantined State, or each portion of a quarantined State, in which the Mexican fruit fly has been found by an inspector, in which the Deputy Administrator has reason to believe the Mexican fruit fly is present, or that the Deputy Administrator considers necessary to regulate because of its proximity to the Mexican fruit fly or its inseparability for quarantine enforcement purposes from localities in which the Mexican fruit fly occurs.

Less than an entire quarantined State is designated as a regulated area only if the Deputy Administrator determines that the State has adopted and is enforcing a quarantine or regulation that imposes restrictions on the intrastate movement of the regulated articles that are substantially the same as those that are imposed with respect to the interstate movement of the articles and the designation of less than the entire State as a regulated area will otherwise be adequate to prevent the artificial interstate spread of the Mexican fruit fly.

Recent trapping surveys by inspectors of California State and county agencies and by APHIS inspectors reveal that a portion of San Diego County, CA, is infested with the Mexican fruit fly.

Accordingly, to prevent the spread of the Mexican fruit fly to noninfested areas of the United States, we are amending the regulations in § 301.64–3 by designating that portion of San Diego County, CA, as a regulated area for the Mexican fruit fly. The regulated area is described in detail in the rule portion of this document. The Deputy Administrator has determined that it is not necessary to designate the entire State of California as a regulated area.

Emergency Action

This rulemaking is necessary on an emergency basis to prevent the Mexican fruit fly from spreading to noninfested areas of the United States. Under these circumstances, the Administrator has determined that prior notice and opportunity for public comment are contrary to the public interest and that there is good cause under 5 U.S.C. 553 for making this rule effective less than 30 days after publication in the **Federal Register**.

We will consider comments we receive during the comment period for this interim rule (*see* **DATES** above). After the comment period closes, we will publish another document in the **Federal Register**. The document will include a discussion of any comments we receive and any amendments we are making to the rule.

Executive Order 12866 and Regulatory Flexibility Act

This rule has been reviewed under Executive Order 12866. For this action, the Office of Management and Budget has waived its review under Executive Order 12866.

This rule amends the Mexican fruit fly regulations by designating a portion of San Diego County, CA, as a regulated area and restricting the interstate movement of regulated articles from that area. This action is necessary to prevent

the spread of the Mexican fruit fly into noninfested areas of the United States.

This emergency situation makes timely compliance with section 604 of the Regulatory Flexibility Act (5 U.S.C. 601 *et seq.*) impracticable. We are currently assessing the potential economic effects of this action on small entities. Based on that assessment, we will either certify that the rule will not have a significant economic impact on a substantial number of small entities or publish a final regulatory flexibility analysis.

Executive Order 12372

This program/activity is listed in the Catalog of Federal Domestic Assistance under No. 10.025 and is subject to Executive Order 12372, which requires intergovernmental consultation with State and local officials. (See 7 CFR part 3015, subpart V.)

Executive Order 12988

This rule has been reviewed under Executive Order 12988, Civil Justice Reform. This rule: (1) Preempts all State and local laws and regulations that are inconsistent with this rule; (2) has no retroactive effect; and (3) does not require administrative proceedings before parties may file suit in court challenging this rule.

National Environmental Policy Act

An environmental assessment and finding of no significant impact have been prepared for this interim rule. The site-specific environmental assessment provides a basis for the conclusion that the implementation of integrated pest management to eradicate the Mexican fruit fly will not have a significant impact on human health and the natural environment. Based on the finding of no significant impact, the Administrator of the Animal and Plant Health Inspection Service has determined that an environmental impact statement need not be prepared.

The environmental assessment and finding of no significant impact were prepared in accordance with: (1) The National Environmental Policy Act of 1969 (NEPA), as amended (42 U.S.C. 4321 *et seq.*), (2) regulations of the Council on Environmental Quality for implementing the procedural provisions of NEPA (40 CFR parts 1500–1508), (3) USDA regulations implementing NEPA (7 CFR part 1b), and (4) APHIS' NEPA Implementing Procedures (7 CFR part 372).

Copies of the environmental assessment and finding of no significant impact are available for public inspection in our reading room (information on the location and hours of the reading room is provided under the heading **ADDRESSES** at the beginning of this document). In addition, copies may be obtained from the individual listed under **FOR FURTHER INFORMATION CONTACT.**

Paperwork Reduction Act

This interim rule contains no information collection or recordkeeping requirements under the Paperwork Reduction Act of 1995 (44 U.S.C. 3501 *et seq.*).

List of Subjects in 7 CFR Part 301

Agricultural commodities, Plant diseases and pests, Quarantine, Reporting and recordkeeping requirements, Transportation.

Accordingly, we are amending 7 CFR part 301 as follows:

PART 301—DOMESTIC QUARANTINE NOTICES

1. The authority citation for part 301 continues to read as follows:

Authority: 7 U.S.C. 7711, 7712, 7714, 7731, 7735, 7751, 7752, 7753, 7754, and 7760; 7 CFR 2.22, 2.80, and 371.3.

Section 301.75–15 also issued under Sec. 204, Title II, Pub. L. 106–113, 113 Stat. 1501A–293; sections 301.75–15 and 301.75–16 also issued under Sec. 203, Title II, Pub. L. 106–224, 114 Stat. 400 (7 U.S.C. 1421 note).

2. In § 301.64–3, paragraph (c) is amended by adding, in alphabetical order, under the heading ''California,'' an entry for San Diego County to read as follows:

§ 301.64–3 Regulated areas.

* * * * *

(c) * * *

California

* * * * *

San Diego County: That portion of San Diego County in the Valley Center area bounded by a line as follows: Beginning at the intersection of State Highway 76 and Rice Canyon Road; then north on Rice Canyon Road to Huntley Road; then northeast on Huntley Road to Alex Road; then northeast on Alex Road to Rainbow Crest Road; then north, northwest, and north on Rainbow Crest Road to Rainbow Heights Road; then north on Rainbow Heights Road to Arouba Road; then southeast on Arouba Road to Aruba Road; then northeast on Aruba Road to Pala Temecula Road; then north on Pala Temecula Road to the San Diego County boundary line; then east along the San Diego County boundary line to the Cleveland National Forest boundary line; then south, east, south, east, south, east, northeast, and southeast along the Cleveland National Forest boundary line to Nate Harrison Grade Road; then southwest, northwest, southeast, west, southeast, and southwest on Nate Harrison Grade Road to Mesa Drive North; then southeast, northeast, southwest, northeast, and southwest on Mesa Drive North to State Highway 76; then northwest on State Highway 76 to Lazy H Drive; then west and south on Lazy H Drive to its southernmost point; then southwest along an imaginary line from the southernmost point of Lazy H Drive to the northernmost point of The Yellow Brick Road; then south on The Yellow Brick Road to Fruitvale Road; then west on Fruitvale Road to Mac Tan Road; then south on Mac Tan Road to Valley Center Road; then west, northwest, west, and south on Valley Center Road to Mirar De Valle Road; then west on Mirar De Valle Road to Alps Way; then west on Alps Way to Cougar Pass Road; then northwest on Cougar Pass Road to Meadow Glen Way East; then west, north, west, and southwest on Meadow Glen Way East to Mountain Meadow Road; then north on Mountain Meadow Road to Glenmeade Way; then west and southwest on Glenmeade Way to Sage Hill Way; then west on Sage Hill Way to Meadow Glen Way West; then north, west, and northwest on Meadow Glen Way West to Welk Highland Drive; then northwest on Welk Highland Drive to Welk View Drive; then west, north, southwest, north, southwest, and west on Welk View Drive to Champagne Boulevard; then north on Champagne Boulevard to Old Highway 395; then north on Old Highway 395 to Dulin Road; then northeast on Dulin Road to Shearer Crossing; then north on Shearer Crossing to Pankey Road; then north on Pankey Road to State Highway 76; then northeast on State Highway 76 to the point of beginning.

* * * * *

Done in Washington, DC, this 15th day of January 2003.

Peter Fernandez,

Acting Administrator, Animal and Plant Health Inspection Service.

[FR Doc. 03–1214 Filed 1–17–03; 8:45 am]

BILLING CODE 3410–34–P

DEPARTMENT OF AGRICULTURE

Animal and Plant Health Inspection Service

7 CFR Parts 318 and 319

[Docket No. 00–059–1]

Movement and Importation of Fruits and Vegetables

AGENCY: Animal and Plant Health Inspection Service.

ACTION: Interim rule and request for comments.

SUMMARY: We are amending the regulations that govern the movement of fruits and vegetables from Puerto Rico and the U.S. Virgin Islands to require the treatment of pigeon peas (fresh shelled or in the pod) from Puerto Rico for movement into any other area of the United States. In addition, we are amending the regulations to require the treatment of pigeon peas (fresh shelled or in the pod) from the Dominican Republic for importation into any area of the United States except Puerto Rico, and to prohibit the importation of mangoes from the British Virgin Islands into the U.S. Virgin Islands. These actions are necessary to prevent the introduction and dissemination of plant pests that are new to or not widely distributed within the United States.

DATES: This interim rule is effective January 21, 2003. We will consider all comments that we receive on or before March 24, 2003.

ADDRESSES: You may submit comments by postal mail/commercial delivery or by e-mail. If you use postal mail/commercial delivery, please send four copies of your comment (an original and three copies) to: Docket No. 00–059–1, Regulatory Analysis and Development, PPD, APHIS, Station 3C71, 4700 River Road Unit 118, Riverdale, MD 20737–1238. Please state that your comment refers to Docket No. 00–059–1. If you use e-mail, address your comment to *regulations@aphis.usda.gov.* Your comment must be contained in the body of your message; do not send attached files. Please include your name and address in your message and ''Docket No. 00–059–1'' on the subject line.

You may read any comments that we receive on this docket in our reading room. The reading room is located in room 1141 of the USDA South Building, 14th Street and Independence Avenue SW., Washington, DC. Normal reading room hours are 8 a.m. to 4:30 p.m., Monday through Friday, except holidays. To be sure someone is there to help you, please call (202) 690–2817 before coming.

APHIS documents published in the **Federal Register**, and related information, including the names of organizations and individuals who have commented on APHIS dockets, are available on the Internet at *http://www.aphis.usda.gov/ppd/rad/webrepor.html.*

FOR FURTHER INFORMATION CONTACT: Mr. Hesham A. Abuelnaga, Import Specialist, Phytosanitary Issues Management Team, PPQ, APHIS, 4700 River Road Unit 140, Riverdale, MD 20737–1236; (301) 734–5334.

SUPPLEMENTARY INFORMATION:

Background

The regulations in ''Subpart—Fruits and Vegetables from Puerto Rico or Virgin Islands'' (7 CFR 318.58 through 318.58–16) are designed to prevent the dissemination of plant pests, including diseases, from Puerto Rico and the U.S. Virgin Islands into other parts of the United States. The regulations in ''Subpart—Fruits and Vegetables'' (7 CFR 319.56 through 319.56–8) prohibit or restrict the importation of fruits and vegetables into the United States from certain parts of the world to prevent the introduction and dissemination of plant pests that are new to or not widely distributed within the United States.

In this document, we are amending the regulations in ''Subpart—Fruits and Vegetables from Puerto Rico or Virgin Islands'' to require the treatment of pigeon peas (fresh shelled or in the pod) from Puerto Rico for movement into any other area of the United States. In addition, we are amending the regulations in ''Subpart—Fruits and Vegetables'' to require the treatment of pigeon peas (fresh shelled or in the pod) from the Dominican Republic for importation into any area of the United States, except Puerto Rico, and to prohibit the importation of mangoes from the British Virgin Islands into the U.S. Virgin Islands. We believe that these actions are necessary to protect the United States from the introduction or spread of injurious plant pests.

Pigeon Peas From Puerto Rico

In ''Subpart—Fruits and Vegetables from Puerto Rico or Virgin Islands,'' § 318.58–2, among other things, lists the fruits and vegetables that are considered regulated articles and that must be moved in accordance with the requirements of that section because they present a pest risk to other parts of the United States.

Pigeon peas in the pod are among the fruits and vegetables listed in § 318.58–2(b)(1) that may be moved interstate from Puerto Rico or the U.S. Virgin Islands when they are free from plant litter, meet the container marking requirements of § 318.58–6, and have either been inspected and certified by an inspector of the Animal and Plant Health Inspection Service (APHIS) as being free from injurious insect infestation or have been subjected to a prescribed treatment. Further, § 318.58–2(b)(1) provides that pigeon peas in the pod from Puerto Rico and the U.S. Virgin Islands may be moved to Baltimore, MD, and Atlantic Coast ports north of Baltimore, MD, without treatment, but must undergo a prescribed treatment under supervision of an inspector if moved to Pacific Coast ports or to Atlantic Coast ports south of Baltimore, MD. The Plant Protection and Quarantine (PPQ) Treatment Manual, which is incorporated by reference at 7 CFR 300.1, lists methyl bromide fumigation as the prescribed treatment for pigeon peas (fresh shelled or in the pod). The pest of concern has been *Maruca testulalis* (the bean pod borer).

Similarly, fresh shelled pigeon peas from Puerto Rico and the U.S. Virgin Islands are among the fruits and vegetables listed in § 318.58–2(b)(2) that may be moved interstate from Puerto Rico and the U.S. Virgin Islands without meeting the certification, marking, treatment, or other requirements of the subpart as long as they are free from plant litter and soil. The fruits and vegetables listed in § 318.58–2(b)(2) are, however, subject to inspection, either in the field or when presented for shipment, as an inspector may require; if injurious insects are detected in the course of an inspection, the movement of the fruit or vegetable may be prohibited or certification and treatment measures may be required.

Individuals leaving Puerto Rico and the U.S. Virgin Islands by aircraft sometimes take pigeon peas (fresh shelled or in the pod) to other parts of the United States. In accordance with § 318.58–10(a), all air passengers must offer their carry-on and check-in baggage and other personal effects for inspection by APHIS inspectors prior to boarding flights from Puerto Rico or the U.S. Virgin Islands to other parts of the United States, except Guam. The purpose of the inspections is to ensure that the baggage does not contain any agricultural articles that could carry plant pests to other parts of the United States.

During these required inspections, inspectors have detected *Melanagromyza obtusa* (pigeon pea pod fly) in untreated pigeon peas (fresh shelled and in the pod) from Puerto Rico. In fact, since February 2000,

inspectors have intercepted the pigeon pea pod fly over 300 times during domestic terminal predeparture inspections of baggage from passengers destined for the United States from Puerto Rico. The pigeon pea pod fly is currently widely distributed in Asia and Australasia, and surveys are ongoing to determine the extent of its distribution in the Caribbean basin. The pigeon pea pod fly is a serious pest of pigeon pea in its natural range and could be of economic concern if it becomes established in North America outside the Caribbean basin.

The natural range for the pigeon pea pod fly is in the warmest climatic zones—equatorial and tropical, so areas of the United States other than Puerto Rico and the U.S. Virgin Islands most at risk for the introduction and establishment of this pest are the warmer southwestern States, southern Florida, and Hawaii. Recent studies have shown that eggs, larvae, and pupae can develop in temperatures ranging from 52 to 56 degrees Fahrenheit, however, and the pigeon pea pod fly has also been found in high concentrations in northern India and Nepal, both of which experience cold winters where the temperatures range from 20 to 50 degrees Fahrenheit. This wide geographic distribution outside its natural range demonstrates some adaptability to adverse climatic conditions, so there exists a moderate risk for the introduction and establishment of the pigeon pea pod fly in the more temperate, northern States as well.

Although the pigeon pea pod fly's primary host is the pigeon pea, it has been reported on alternate host plants in other countries when pigeon pea is unavailable. Since pigeon pea is grown to a limited extent only in southern Florida, the potential impact of this pest on the continental United States would depend upon its ability to find a suitable, alternate host. Studies into potential alternate hosts for the pigeon pea pod fly present in the continental United States, including kidney bean, chick pea, and black-eyed pea, are ongoing but no findings have been confirmed.

Considering that the pigeon pea pod fly is now established in the Caribbean even though its natural range is Asia and Australasia, this pest has demonstrated an ability to disperse and to establish itself readily if suitable hosts and climate are present. The pest's apparent climatic adaptability, as discussed above, combined with its ability to survive on secondary hosts, could lead to its establishment in the continental United States despite the fact that pigeon pea is not commercially grown here. The potential impact of the establishment of this pest is difficult to predict, but it has a devastating effect on its primary host in its natural range.

To prevent the spread of the pigeon pea pod fly into additional areas of the United States, this interim rule requires all pigeon peas (fresh shelled or in the pod) from Puerto Rico to be treated with methyl bromide, which is known to be effective against the pigeon pea pod fly, for movement into any other part of the United States. This rule places the mandatory treatment requirement for pigeon peas from Puerto Rico in a new paragraph (b)(4) in § 318.58–2. In conjunction with this change, we have amended § 318.58–2(b)(1) and (b)(2) so that the requirements for pigeon peas in those paragraphs now apply only to pigeon peas from the U.S. Virgin Islands.

Prior to this interim rule, § 318.58(c) allowed unrestricted movement of all fruits or vegetables in either direction between Puerto Rico and the U.S. Virgin Islands. At this time, the pigeon pea pod fly has not been detected in the U.S. Virgin Islands; therefore, we are amending § 318.58(c) to specify that the movement of pigeon peas (fresh shelled or in the pod) from Puerto Rico to the U.S. Virgin Islands is restricted, in accordance with § 318.58–2(b)(4).

Pigeon Peas From the Dominican Republic

In ''Subpart—Fruits and Vegetables,'' paragraph (e) of § 319.56–2 provides conditions under which fruits or vegetables that are not otherwise restricted by quarantines or other orders may be imported. Under § 319.56–2(e), such fruits and vegetables may be imported under a permit if, among other things, the fruits or vegetables are not attacked in the country of origin by injurious insects, including fruit and melon flies (*Tephritidae*).

Until recently, untreated pigeon peas (fresh shelled or in the pod) from the Dominican Republic were allowed to be imported into the United States under permit in accordance with § 319.56–2(e). Although no commercial shipments of pigeon peas have been exported to the United States from the Dominican Republic in over a decade, individuals arriving in the United States from the Dominican Republic sometimes bring pigeon peas in their baggage, which is subject to inspection by USDA inspectors in accordance with § 319.56–7. During these inspections, USDA inspectors have detected the pigeon pea pod fly in pigeon peas (fresh shelled and in the pod) from the Dominican Republic.

To prevent the introduction of the pigeon pea pod fly from the Dominican Republic into noninfested areas of the United States, this interim rule requires that pigeon peas (fresh shelled or in the pod) from the Dominican Republic be treated with methyl bromide for importation into the United States. We are adding this requirement to § 319.56–2x(a), which lists fruits and vegetables that may be imported only if treated in accordance with the PPQ Treatment Manual. However, because pigeon pea pod fly exists in Puerto Rico, we will not require pigeon peas (fresh shelled or in the pod) from the Dominican Republic to be treated for importation into Puerto Rico.

Mangoes From the British Virgin Islands

In accordance with § 319.56–2(d), fruits and vegetables from the British Virgin Islands may be imported into the U.S. Virgin Islands without a permit, or other restriction, subject to the requirements in § 319.56–6. Under § 319.56–6, all imported fruits and vegetables, as a condition of entry, are subject to inspection, disinfection, or both, at the port of first arrival, as may be required by a USDA inspector to detect and eliminate plant pests.

The mango seed weevil (*Sternochetus mangiferae*) is a pest of mangoes that is undetectable until the larvae tunnel their way out of the seed, which can make visual detection difficult. However, USDA inspectors in the U.S. Virgin Islands have detected the mango seed weevil on a regular basis in shipments of mangoes from the British Virgin Islands.

In order to ensure that the mango seed weevil is not introduced into the U.S. Virgin Islands, we are amending § 319.56–2(d) to prohibit the importation of mangoes from the British Virgin Islands into the U.S. Virgin Islands. Although we recently approved an irradiation treatment for mangoes, which has been shown to eliminate the mango seed weevil, we chose prohibition in this case because there does not appear to be commercial shipment of mangoes or other fruits and vegetables from the British Virgin Islands to the U.S. Virgin Islands that would support an irradiation facility in the British Virgin Islands. If, at a later date, an approved irradiation facility is built and operated under a compliance agreement in accordance with the regulations in § 305.2, we will reconsider this prohibition.

Emergency Action

This rulemaking is necessary on an emergency basis to prevent the introduction of the pigeon pea pod fly

and the mango seed weevil into noninfested areas of the United States where those pests could become established. Under these circumstances, the Administrator has determined that prior notice and opportunity for public comment are contrary to the public interest and that there is good cause under 5 U.S.C. 553 for making this rule effective less than 30 days after publication in the **Federal Register**.

We will consider comments we receive during the comment period for this interim rule (see **DATES** above). After the comment period closes, we will publish another document in the **Federal Register**. The document will include a discussion of any comments we receive and any amendments we are making to the rule.

Executive Order 12866 and Regulatory Flexibility Act

This rule has been reviewed under Executive Order 12866. The rule has been determined to be not significant for the purposes of Executive Order 12866 and, therefore, has not been reviewed by the Office of Management and Budget.

This rule requires the treatment of pigeon peas (fresh shelled and in the pod) from Puerto Rico for movement into any other area of the United States. In addition, this rule requires the treatment of pigeon peas (fresh shelled and in the pod) from the Dominican Republic for importation into the United States, except Puerto Rico. This rule also prohibits the importation of mangoes from the British Virgin Islands into the U.S. Virgin Islands. We believe that these actions are necessary to protect the United States from the spread of injurious plant pests.

Pigeon Peas From Puerto Rico

Prior to this interim rule, pigeon peas (in the pod) from Puerto Rico were required to be treated only if they were moved to Pacific Coast ports or to Atlantic Coast ports south of Baltimore, MD, and pigeon peas (fresh shelled) from Puerto Rico were required to be treated only if found to be infested with injurious insects. This rule requires the treatment of pigeon peas (fresh shelled or in the pod) from Puerto Rico for movement into any other area of the United States to prevent the spread of the pigeon pea pod fly.

We do not believe that this change will have a significant economic effect on small entities in the United States. In Puerto Rico, pigeon peas are a backyard product and are consumed domestically. During the last 9 years of reported data, the production of pigeon peas in Puerto Rico fluctuated from 2,119 metric tons in 1993, to 454 metric tons in 1996, to 1,062 metric tons in 1998 and 1999, and then remained steady at 1,060 metric tons in 2000 and 2001. In 1993, there were 1,166 farms in Puerto Rico planted with pigeon peas; however, the 1998 U.S. Census of Agriculture reported that there were 660 farms in Puerto Rico planted with pigeon peas, a 43 percent decline in 5 years in the number of farms planted with pigeon peas. During this time, there were no reported commercial shipments from Puerto Rico into other areas of the United States or to foreign destinations.

Pigeon Peas From the Dominican Republic

Prior to this interim rule, untreated pigeon peas (fresh shelled or in the pod) from the Dominican Republic could be imported into the United States subject to inspection and disinfection at the port of first arrival. This rule requires the treatment of pigeon peas (fresh shelled or in the pod) from the Dominican Republic for importation into any area of the United States except Puerto Rico, to prevent the introduction of the pigeon pea pod fly into noninfested areas of the United States.

We do not believe that this change will have a significant economic effect on small entities in the United States. In 1986, 734 metric tons of pigeon peas from the Dominican Republic were imported into the United States, and in 1991, 12 metric tons of pigeon peas from the Dominican Republic were imported into the United States. Since 1991, there have been no reported commercial imports of pigeon peas from the Dominican Republic into the United States.

Mangoes From the British Virgin Islands

Until recently, mangoes from the British Virgin Islands were allowed to be imported into the U.S. Virgin Islands without treatment. However, due to the detection of the mango seed weevil in mangoes from the British Virgin Islands, we are prohibiting the importation of mangoes from the British Virgin Islands into the U.S. Virgin Islands. Although we recently approved an irradiation treatment that is effective for mango seed weevil, there is currently no irradiation treatment facility in the British Virgin Islands capable of treating the mangoes in accordance with the phytosanitary regulations in § 305.2.

We do not believe that this change will have a significant economic effect on small entities in the United States because there is apparently no commercial movement of mangoes from the British Virgin Islands to the U.S. Virgin Islands.

Under these circumstances, the Administrator of the Animal and Plant Health Inspection Service has determined that this action will not have a significant economic impact on a substantial number of small entities.

Executive Order 12988

This rule has been reviewed under Executive Order 12988, Civil Justice Reform. This rule: (1) Preempts all State and local laws and regulations that are inconsistent with this rule; (2) has no retroactive effect; and (3) does not require administrative proceedings before parties may file suit in court challenging this rule.

Paperwork Reduction Act

This rule contains no new information collection or recordkeeping requirements under the Paperwork Reduction Act of 1995 (44 U.S.C. 3501 *et seq.*).

List of Subjects

7 CFR Part 318

Cotton, Cottonseeds, Fruits, Guam, Hawaii, Plant diseases and pests, Puerto Rico, Quarantine, Transportation, Vegetables, Virgin Islands.

7 CFR Part 319

Bees, Coffee, Cotton, Fruits, Honey, Imports, Logs, Nursery Stock, Plant diseases and pests, Quarantine, Reporting and recordkeeping requirements, Rice, Vegetables.

Accordingly, we are amending 7 CFR parts 318 and 319 as follows:

PART 318—HAWAIIAN AND TERRITORIAL QUARANTINE NOTICES

1. The authority citation for part 318 continues to read as follows:

Authority: 7 U.S.C. 7711, 7712, 7714, 7731, 7754, and 7756; 7 CFR 2.22, 2.80, and 371.3.

2. In § 318.58, paragraph (c) is revised to read as follows:

§ 318.58 Notice of quarantine.

* * * * *

(c) Except for pigeon peas (fresh shelled or in the pod) moved from Puerto Rico to the U.S. Virgin Islands, which must meet the requirements of § 318.58–2(b)(4), no restrictions are placed on the movement of fruits or vegetables in either direction between Puerto Rico and the U.S. Virgin Islands.

* * * * *

3. Section 318.58–2 is amended as follows:

a. By revising paragraph (b)(1) to read as set forth below.

b. In paragraph (b)(2), by removing from the list the words ''Pigeonpea

(fresh shelled)'' and adding the words ''Pigeon peas (fresh shelled) from the U.S. Virgin Islands'' in their place.

c. By adding a new paragraph (b)(4) to read as set forth below.

§ 318.58–2 Regulated articles.

* * * * *

(b) * * *

(1) Subject to the conditions provided in this section, and to any treatment prescribed by the Administrator, the following fruits and vegetables may be moved when they are free from plant litter, are marked in compliance with § 318.58–6, and have been inspected by an inspector and certified by the inspector to be free from injurious insect infestation (including the West Indian fruit fly and the bean pod borer) or to have been given prescribed treatment:

Citrus fruits (orange, grapefruit, lemon, citron, and lime);

Corn (sweet corn on cob);

Mangoes (*Mangifera* spp.), no larger than size 8 (no more than 700 g each), when treated as prescribed in the Plant Protection and Quarantine Treatment Manual, which is incorporated by reference at § 300.1 of this chapter;

Peppers;

Pigeon peas (in the pod) from the U.S. Virgin Islands and string beans, lima beans, faba beans, and fresh okra from Puerto Rico or the U.S. Virgin Islands.[1]

* * * * *

(4) Pigeon peas (fresh shelled or in the pod) from Puerto Rico may be moved to any other area of the United States only if treated in accordance with the Plant Protection and Quarantine Treatment Manual.

§ 318.58–4a [Amended]

4. Section 318.58–4a is amended by redesignating footnote 1 and its reference in the text as footnote 2.

§ 318.58–12 [Amended]

5. Section 318.58–12 is amended by redesignating footnotes 2 and 3 and their references in the text as footnotes 3 and 4, respectively.

PART 319—FOREIGN QUARANTINE NOTICES

6. The authority citation for part 319 continues to read as follows:

Authority: 7 U.S.C. 166, 450, 7711–7714, 7718, 7731, 7732, and 7751–7754; 21 U.S.C. 136 and 136a; 7 CFR 2.22, 2.80, and 371.3.

7. In § 319.56–2, paragraph (d) is revised to read as follows:

§ 319.56–2 Restrictions on entry of fruits and vegetables.

* * * * *

(d) Fruits and vegetables grown in the British Virgin Islands may be imported into the U.S. Virgin Islands without further permit other than the authorization contained in this paragraph but subject to the requirements of paragraph (a) of this section, and of §§ 319.56–5, 319.56–6, and 319.56–7, except that:

(1) Such fruits and vegetables are exempted from the notice of arrival requirements of § 319.56–5 when an inspector finds that equivalent information is obtainable from the U.S. Customs Service; and

(2) Mangoes grown in the British Virgin Islands are prohibited entry into the U.S. Virgin Islands.

* * * * *

8. In § 319.56–2x, paragraph (a), the table is amended by adding, in alphabetical order, an entry for pigeon peas from the Dominican Republic to read as follows:

§ 319.56–2x Administrative instructions; conditions governing the entry of certain fruits and vegetables for which treatment is required.

(a) * * *

Country/locality	Common name	Botanical name	Plant part(s)
*	*	*	*
Dominican Republic	Pigeon peas	*Cajanus cajan*	Pod of shelled (Treatment not required for pigeon peas (in the pod or fresh shelled) imported into Puerto Rico.)
*	*	*	*

* * * * *

Done in Washington, DC, this 14th day of January 2003.

Peter Fernandez,

Acting Administrator, Animal and Plant Health Inspection Service.

[FR Doc. 03–1211 Filed 1–17–03; 8:45 am]

BILLING CODE 3410–34–P

DEPARTMENT OF AGRICULTURE

Animal and Plant Health Inspection Service

7 CFR Part 319

[Docket No. 00–068–3]

Cold Treatment for Fresh Fruits; Port of Corpus Christi, TX

AGENCY: Animal and Plant Health Inspection Service, USDA.

ACTION: Final rule.

SUMMARY: We are amending the regulations to allow, under certain conditions, the cold treatment of imported fruit upon arrival at the maritime port of Corpus Christi, TX. We have determined that there are biological barriers at this port that, along with certain safeguards, would prevent the introduction of fruit flies and other insect pests into the United States in the unlikely event that they escape from shipments of fruit before the fruit undergoes cold treatment. This action will facilitate the importation of fruit requiring cold treatment while continuing to provide protection against fruit flies and other insect pests into the United States.

EFFECTIVE DATE: January 21, 2003.

FOR FURTHER INFORMATION CONTACT: Dr. Inder P. Gadh, Import Specialist, PPQ, APHIS, 4700 River Road Unit 140, Riverdale, MD 20737–1236; (301) 734–6799.

[1] These products will be certified for movement to Pacific Coast ports or to Atlantic Coast ports south of Baltimore, MD, only when they have been treated as prescribed in the Plant Protection and Quarantine Treatment Manual. Such products may be certified for movement to Baltimore, MD, and Atlantic Coast ports north of Baltimore without such treatment, but untreated fresh okra may be so certified only for immediate processing or consumption in these northern areas.

SUPPLEMENTARY INFORMATION:

Background

The fruits and vegetables regulations in 7 CFR 319.56 through 319.56–8 (referred to below as the regulations), prohibit or restrict the importation of fruits and vegetables to prevent the introduction or dissemination of quarantine pests, including fruit flies, that are new or not widely distributed in the United States. The Animal and Plant Health Inspection Service (APHIS) of the U.S. Department of Agriculture administers these regulations.

Under the regulations, APHIS allows certain fruits to be imported into the United States if they undergo sustained refrigeration (cold treatment) sufficient to kill certain insect pests. Cold treatment temperatures and the duration of treatment vary according to the type of fruit and the pests involved. Detailed cold treatment procedures may be found in the Plant Protection and Quarantine Treatment Manual, which is incorporated by reference into the regulations at 7 CFR 300.1.

Most imported fruit that requires cold treatment undergoes cold treatment while in transit to the United States. However, APHIS also allows imported fruit to undergo cold treatment at an approved cold treatment facility in either the country of origin or after arrival in the United States at certain ports designated by APHIS in § 319.56–2d(b)(1) of the regulations.

On June 1, 2001, we published in the **Federal Register** (66 FR 29735–29739, Docket No. 00–068–1), a proposal to amend the regulations to allow, under certain conditions, the cold treatment of imported fruit upon arrival at the port of Corpus Christi, TX. The proposal was based on our determination that there are biological barriers at this port that, along with certain safeguards, would prevent the introduction of fruit flies and other insect pests into the United States in the unlikely event that they escape from shipments of fruit before the fruit undergoes cold treatment. In that proposed rule, we also proposed to correct several outdated references in the regulations to the ''Bureau of Customs'' and ''Collector of Customs'' and to correct the locations provided for Baltimore-Washington International and Dulles International Airports.

We solicited comments concerning our proposal for 60 days ending July 31, 2001. We received three comments by that date. They were from the director of the Port of Corpus Christi, TX, an importer, and a representative of State government. Two commenters were in favor of our proposal and agreed with the rationale we presented in the proposed rule.

The third commenter suggested that the treatment of imported fruit should be forbidden anywhere in the southern United States because this region is especially vulnerable to fruit fly infestation. Also, this commenter noted that many U.S. trading partners require, as a condition of entry, that treatment of all commodity imports be completed in the country of origin or en route, and do not permit treatment at the port of entry.

We have carefully considered the potential risks associated with allowing the cold treatment of imported fruits and vegetables at the Port of Corpus Christi, TX, and have determined that the biological barriers present in the area of this port, along with the safeguards described in the proposed rule, would prevent the introduction of fruit flies and other insect pests in the unlikely event that they escape from a shipment of imported fruit before the fruit undergoes cold treatment. As noted in the proposed rule, this determination is based on a 1994 document prepared by APHIS assessing the pest risks associated with allowing cold treatment of tropical fruit fly host materials at certain U.S. ports, as well as on a specific analysis of conditions at the Port of Corpus Christi. The 1994 document established risk groups for many ports in the United States, including Corpus Christi, TX. Assignment of a port to a particular risk group was based on a number of criteria, including the individual port's latitude, microclimate, immediate host availability, and past fruit fly introductions. The proposed risk mitigation measures for the Port of Corpus Christi were tailored to the level of risk assigned by that 1994 document. (Copies of this risk assessment document may be obtained by writing to the person listed under **FOR FURTHER INFORMATION CONTACT**.) Although other countries may have different requirements regarding where and when treatments are to be conducted, APHIS' regulations have provided for cold treatment after arrival for more than 30 years. We acknowledge that conducting cold treatment of imported fruit at a port in the southern United States such as Corpus Christi, TX, presents different risks than at ports in the northern United States, but we have found through experience that those risks can be successfully managed.

Therefore, for the reasons given in the proposed rule and in this document, we are adopting the proposed rule as a final rule, without change.

Effective Date

This is a substantive rule that relieves restrictions and, pursuant to the provisions of 5 U.S.C. 553, may be made effective less than 30 days after publication in the **Federal Register**. This rule allows, under certain conditions, the cold treatment of imported fruit upon arrival at the Port of Corpus Christi, TX. Making this action effective immediately will facilitate the importation of imported fruit requiring cold treatment while continuing to provide protection against the introduction of fruit flies and other quarantine pests into the United States. Therefore, the Administrator of the Animal and Plant Health Inspection Service has determined that this rule should be effective upon publication in the **Federal Register**.

Executive Order 12866 and Regulatory Flexibility Act

This rule has been reviewed under Executive Order 12866. For this action, the Office of Management and Budget has waived its review under Executive Order 12866.

This final rule amends the regulations governing the importation of fruits and vegetables to allow, under certain conditions, the cold treatment of imported fruit at the Port of Corpus Christi, TX, where a new cold treatment facility has been constructed. This action will facilitate the importation of fruit requiring cold treatment while continuing to provide protection against the introduction of fruit flies and other quarantine pests into the United States.

In accordance with 5 U.S.C. 603, we have performed a final regulatory flexibility analysis, which is set out below, regarding the effects of this rule on small entities. The initial regulatory flexibility analysis in our proposed rule stated that we did not have all the data necessary for a comprehensive analysis of the potential effects of this rule on small entities. Therefore, we invited comments concerning potential economic effects, particularly the number and kind of small entities that might incur benefits or costs. We did not receive any comments providing the data we requested.

The port of Corpus Christi, located along the Texas coast on the Gulf of Mexico, is connected to both U.S. and Mexican markets through several State and interstate highways as well as by rail service from three rail carriers, which all have access to the docks. The facility at the port of Corpus Christi that would be used for cold treatment has 295,500 square feet of covered dockside storage and a state-of-the-art refrigerated

warehouse with a 100,000 square-foot capacity. This cold storage and treatment facility, completed in August 2000, includes three rooms with freezing and chilling capacities, and temperature-controlled rail and truck docks. A study conducted by the port authority of Corpus Christi predicts that by the year 2010, national container traffic will top 2.75 million transit and exit units (TEU's) and that the port of Corpus Christi could capture a throughput of 820,000 TEU's.

The port authority expects that it would receive commodity imports from several countries throughout Central and South America in addition to New Zealand and South Africa. The annual collective estimated value of commodities expected to be cold treated at the facility is nearly $131.7 million.

Effect on Small Entities

According to the Small Business Administration, a small entity involved in the wholesale trade of fresh fruits is one that employs no more than 100 people. While small entities will likely benefit from being able to cold treat commodities at the port of Corpus Christi, the number of these entities and the extent to which they might benefit are unknown. Additionally, import and transport companies in the region can be expected to handle increased traffic in fruits and vegetables, as indicated by the projected figures provided by exporters in Latin America and South Africa; consequently, we expect local employment opportunities to increase. Given these considerations, we expect that the overall economic effect of this rule will be positive.

This rule contains no information collection or recordkeeping requirements (see ''Paperwork Reduction Act'' below).

Executive Order 12988

This final rule allows fresh fruit to be imported into the United States for cold treatment at the maritime port of Corpus Christi, TX. State and local laws and regulations regarding fruit imported under this rule would be preempted while the fruit is in foreign commerce. Fresh fruit is generally imported for immediate distribution and sale to the consuming public and would remain in foreign commerce until sold to the ultimate consumer. The question of when foreign commerce ceases in other cases must be addressed on a case-by-case basis. No retroactive effect will be given to this rule, and this rule will not require administrative proceedings before parties may file suit in court challenging this rule.

Paperwork Reduction Act

This final rule contains no information collection or recordkeeping requirements under the Paperwork Reduction Act of 1995 (44 U.S.C. 3501 *et seq.*).

List of Subjects in 7 CFR Part 319

Bees, Coffee, Cotton, Fruits, Honey, Imports, Nursery Stock, Plant Diseases and pest, Quarantine, Reporting and recordkeeping requirements, Rice, Vegetables.

Accordingly, we are amending 7 CFR part 319 as follows:

PART 319—FOREIGN QUARANTINE NOTICES

1. The authority citation for part 319 continues to read as follows:

Authority: 7 U.S.C. 166, 450, 7711–7714, 7718, 7731, 7732, and 7751–7754; 21 U.S.C. 136 and 136a; 7 CFR 2.22, 2.80, and 371.3.

2. Section 319.56–2d is amended as follows:

a. In paragraph (b)(1), the words ''Corpus Christi, TX,'' are added immediately before the words ''and Gulfport, MS''; the words ''Airport, Baltimore, MD,'' are added after the words ''Baltimore-Washington International''; and the words ''airports, Washington, DC'' are removed and the words ''Airport, Chantilly, VA'' added in their place.

b. In paragraph (b)(5)(iii), the words ''Collector of Customs'' is removed and the words ''Customs Service'' added in their place.

c. In paragraphs (b)(5)(iv)(B), (b)(5)(v)(B), and (b)(5)(vi)(B), the words ''Bureau of Customs'' are removed each time they occur and the words ''U.S. Customs Service'' added in their place.

d. The introductory text of paragraph (b)(5)(vii) is revised.

e. In paragraph (b)(5)(vii)(A), the words ''at the port of Gulfport, MS'' are removed.

f. In paragraph (b)(5)(vii)(C), the words ''Bureau of Customs'' are removed and the words ''U.S. Customs Service'' added in their place.

g. Paragraph (b)(5)(vii)(H) is revised.

The amended text reads as follows:

§ 319.56–2d Administrative instructions for cold treatment of certain imported fruits.

* * * * *

(b) * * *

(5) * * *

(vii) *Special requirements for the maritime ports of Gulfport, MS, and Corpus Christi, TX.* Shipments of fruit arriving at the ports of Gulfport, MS, and Corpus Christi, TX, for cold treatment, in addition to meeting all of the requirements in paragraphs (b)(5)(i) through (b)(5)(iii) of this section, must meet the following special conditions:

* * * * *

(H) Blacklights or sticky paper must be used within the cold treatment facility, and other trapping methods, including Jackson/methyl eugenol and McPhail traps, must be used within the 4 square miles surrounding the cold treatment facility at the maritime port of Gulfport, MS, and within the 5 square miles surrounding the cold treatment facility at the maritime port of Corpus Christi, TX.

* * * * *

Done in Washington, DC, this 14th day of January 2003.

Peter Fernandez,

Acting Administrator, Animal and Plant Health Inspection Service.

[FR Doc. 03–1212 Filed 1–17–03; 8:45 am]

BILLING CODE 3410–34–P

NUCLEAR REGULATORY COMMISSION

10 CFR Part 72

RIN 3150–AH05

List of Approved Spent Fuel Storage Casks: VSC–24 Revision; Confirmation of Effective Date

AGENCY: Nuclear Regulatory Commission.

ACTION: Direct final rule; confirmation of effective date.

SUMMARY: The Nuclear Regulatory Commission (NRC) is confirming the effective date of February 3, 2003, for the direct final rule that appeared in the **Federal Register** of November 20, 2002 (67 FR 69987). This direct final rule amended the NRC's regulations by revising the Pacific Sierra Nuclear Associates VSC–24 system listing within the ''List of approved spent fuel storage casks'' to include Amendment No. 4 to Certificate of Compliance No. 1007. This document confirms the effective date.

DATES: The effective date of February 3, 2003, is confirmed for this direct final rule.

ADDRESSES: Documents related to this rulemaking, including comments received, may be examined at the NRC Public Document Room, 11555 Rockville Pike, Rockville, MD. These same documents may also be viewed and downloaded electronically via the rulemaking Web site (http://ruleforum.llnl.gov). For information about the interactive rulemaking Web

site, contact Ms. Carol Gallagher (301) 415–5905; e-mail *CAG@nrc.gov.*

FOR FURTHER INFORMATION CONTACT: Jayne M. McCausland, Office of Nuclear Material Safety and Safeguards, U.S. Nuclear Regulatory Commission, Washington, DC 20555, telephone (301) 415–6219 (email: *jmm2@nrc.gov*).

SUPPLEMENTARY INFORMATION: On November 20, 2002 (67 FR 69987), the NRC published in the **Federal Register** a direct final rule amending its regulations in 10 CFR Part 72 to revise the Pacific Sierra Nuclear Associates VSC–24 system listing within the ''List of approved spent fuel storage casks'' to include Amendment No. 4 to Certificate of Compliance No. 1007. Amendment No. 4 modifies the present cask system design to permit the storage of different specific fuel control elements as integral components to fuel assemblies under a general license. In addition, Amendment No. 4 amends Technical Specification (TS) 1.1.1 to change the flood condition velocity from 7.62 meters per second (m/s) [25 feet per second (ft/s)] to 5.39 m/s (17.7 ft/s); TS 1.2.1, 1.2.4, and 1.2.6 to address the additional fuel control elements approved for storage, and deletes TS 1.2.10 to eliminate redundant requirements for controlling moderator density.

In the direct final rule, NRC stated that if no significant adverse comments were received, the direct final rule would become final on the date noted above. The NRC did not receive any comments that warranted withdrawal of the direct final rule. Therefore, this rule will become effective as scheduled.

Dated at Rockville, Maryland, this 15th day of January, 2003.

For the Nuclear Regulatory Commission.

Michael T. Lesar,

Chief, Rules and Directives Branch, Division of Administrative Services, Office of Administration.

[FR Doc. 03–1219 Filed 1–17–03; 8:45 am]

BILLING CODE 7590–01–P

DEPARTMENT OF TRANSPORTATION

Federal Aviation Administration

14 CFR Part 39

[Docket No. 2001–SW–40–AD; Amendment 39–13022; AD 2002–13–05 R1]

RIN 2120–AA64

Airworthiness Directives; MD Helicopters, Inc. Model 369D, 369E, 369F, and 369FF Helicopters

AGENCY: Federal Aviation Administration, DOT.

ACTION: Final rule.

SUMMARY: This amendment revises an airworthiness directive (AD) for the specified MD Helicopters, Inc. (MDHI) helicopters that currently requires identifying the part number (P/N) of the bolts that attach the tail rotor gearbox to the tailboom and replacing any bolt of inadequate grip length with an airworthy bolt. That AD also requires adding an additional washer if more than four threads protrude from the nutplate. This amendment requires the same actions as the existing AD but reduces the applicability to only certain tailboom serial numbers and parts modified in accordance with either Supplemental Type Certificate (STC) SH5055NM or SH4801NM. This amendment also corrects a typographical error and clarifies that a slippage mark needs to be reapplied to each bolt regardless of the outcome of the required torque test. This amendment is prompted by the need to correct and clarify the applicability and other portions of the existing AD. The actions specified by this AD are intended to prevent loss of a tail rotor gearbox due to bolts of inadequate grip length and subsequent loss of control of the helicopter.

DATES: Effective February 25, 2003.

FOR FURTHER INFORMATION CONTACT: John Cecil, Aviation Safety Engineer, FAA, Los Angeles Aircraft Certification Office, Airframe Branch, 3960 Paramount Blvd., Lakewood, California 90712–4137, telephone (562) 627–5228, fax (562) 627–5210.

SUPPLEMENTARY INFORMATION: A proposal to amend 14 CFR part 39 by revising AD 2002–13–05, Amendment 39–12793 (67 FR 43227, June 27, 2002), for the specified MDHI model helicopters with a tailboom modified according to either Aerometals STC SH5055NM or SH4801NM, was published in the **Federal Register** on September 24, 2002 (67 FR 185).

Before issuing AD 2002–13–05, the FAA solicited comments by a Notice of Proposed Rulemaking, published in the **Federal Register** on December 27, 2001 (66 FR 66821). A commenter stated that the applicability of the AD should be limited to certain part-numbered tailbooms with serial number (S/N) 5001–5032 specified in the FAA-approved Aerometals service bulletin. We did not agree with the commenter and, except for minor editorial changes, issued the AD as proposed (67 FR 43227, June 27, 2002). Since issuing AD 2002–13–05, we have determined that we inappropriately responded to the comment and that the commenter's concern was valid. We are now reducing the applicability of AD 2002–13–05 to include only certain tailboom S/N's and parts that are modified in accordance with either STC SH5055NM or SH4801NM. We are also correcting the P/N for the washer to P/N AN960D416 in Figure 1 of this AD and clarifying that a slippage mark needs to be reapplied to each bolt regardless of the outcome of the required torque test.

Interested persons have been afforded an opportunity to participate in the making of this amendment. No comments were received on the proposal or the FAA's determination of the cost to the public. The FAA has determined that air safety and the public interest require the adoption of the rule as proposed.

The FAA estimates that this AD will affect 500 helicopters of U.S. registry. Also, the FAA estimates this AD will require ½ work hour per helicopter to determine whether a helicopter has been modified by either STC and 1 work hour to inspect and replace the bolts for each of approximately 40 helicopters modified by the STC's. The average labor rate is $60 per work hour. Required parts will cost approximately $40 per helicopter. Based on these figures, we estimate the total cost impact of the AD on U.S. operators to be $19,000.

The regulations adopted herein will not have a substantial direct effect on the States, on the relationship between the national Government and the States, or on the distribution of power and responsibilities among the various levels of government. Therefore, it is determined that this final rule does not have federalism implications under Executive Order 13132.

For the reasons discussed above, I certify that this action (1) Is not a ''significant regulatory action'' under Executive Order 12866; (2) is not a ''significant rule'' under DOT Regulatory Policies and Procedures (44 FR 11034, February 26, 1979); and (3) will not have a significant economic impact, positive or negative, on a substantial number of small entities under the criteria of the Regulatory Flexibility Act. A final evaluation has been prepared for this action and it is contained in the Rules Docket. A copy of it may be obtained from the FAA, Office of the Regional Counsel, Southwest Region, 2601 Meacham Blvd., Room 663, Fort Worth, Texas.

List of Subjects in 14 CFR Part 39

Air transportation, Aircraft, Aviation safety, Safety.

Adoption of the Amendment

Accordingly, pursuant to the authority delegated to me by the Administrator, the Federal Aviation Administration amends part 39 of the Federal Aviation Regulations (14 CFR part 39) as follows:

PART 39—AIRWORTHINESS DIRECTIVES

1. The authority citation for part 39 continues to read as follows:

Authority: 49 U.S.C. 106(g), 40113, 44701.

§ 39.13 [Amended]

2. Section 39.13 is amended by removing Amendment 39–12793 (67 FR 43227, June 27, 2002), and by adding a new airworthiness directive to read as follows:

2002–13–05 R1 MD Helicopters, Inc.: Amendment 39–13022, Docket No. 2001–SW–40–AD. Revises AD 2002–13–05, Amendment 39–12793.

Applicability: The following MD Helicopters, Inc. helicopter models, certificated in any category:

Helicopter model	With	Modified In accordance with
(1) 369D, 369E, 369F, 369FF	Tailboom, serial number (S/N) 5001–5032	Aerometals Supplemental Type Certificate (STC) SH5055NM
(2) 369D and 369E	Tail Rotor Gearbox Attach Bolts	Aerometals STC SH4801NM

Note 1: This AD applies to each helicopter identified in the preceding applicability provision, regardless of whether it has been otherwise modified, altered, or repaired in the area subject to the requirements of this AD. For helicopters that have been modified, altered, or repaired so that the performance of the requirements of this AD is affected, the owner/operator must request approval for an alternative method of compliance in accordance with paragraph (c) of this AD. The request should include an assessment of the effect of the modification, alteration, or repair on the unsafe condition addressed by this AD; and if the unsafe condition has not been eliminated, the request should include specific proposed actions to address it.

Compliance: Required as indicated, unless accomplished previously.

To prevent loss of the tail rotor gearbox due to attaching bolts of inadequate grip length and subsequent loss of control of the helicopter, accomplish the following:

(a) Within 25 hours time-in-service (TIS):

(1) For each tail rotor gearbox attaching bolt (bolt):

(i) Determine the part number (P/N).

(ii) If the P/N cannot be determined or if the bolt is not P/N NAS1304–26, before further flight, replace the bolt with bolt, P/N NAS1304–26.

(iii) Torque the bolt to 100–110 in-lbs and apply a slippage mark.

(2) Remove the tailboom control rod and determine the number of bolt threads protruding from each nutplate on the internal surface of the aft tailboom frame casting, P/N 369D23503, as shown in Figure 1 of this AD. At least one thread must protrude. If more than four threads protrude, add an additional washer, P/N AN960D416, under the bolt head. Torque the bolt to 100–110 in-lbs, and reapply a slippage mark. *See Figure 1:*

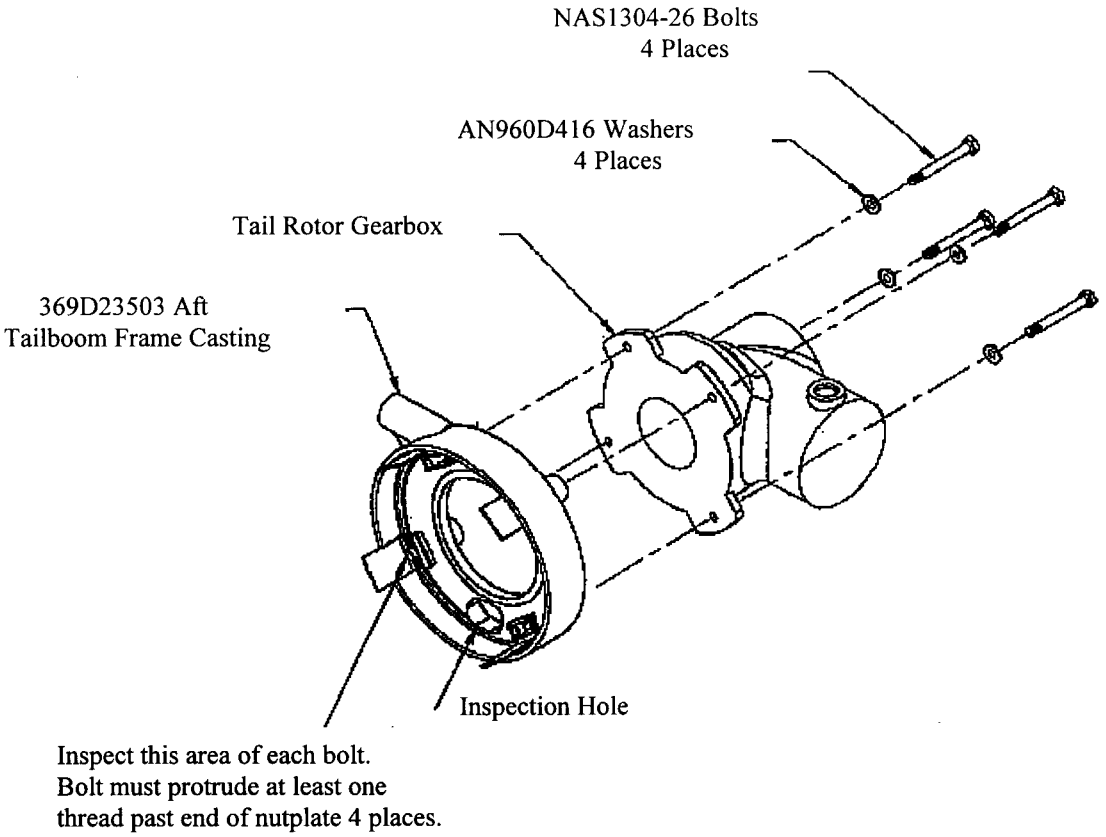

Figure 1 - Inspection Location

(b) Between 2 and 10 hours TIS after accomplishing the requirements of paragraph (a) of this AD, inspect the torque on each bolt by applying 100 in-lbs. If any bolt movement occurs, retorque the bolt to 100–110 in-lbs. Reapply a slippage mark to the bolt regardless of the outcome of the torque test. Reinspect the torque between 2 and 10 hours TIS thereafter until no bolt movement occurs.

Note 2: Aerometals Service Bulletin SB–001, dated August 3, 2000, pertains to the subject of this AD.

(c) An alternative method of compliance or adjustment of the compliance time that provides an acceptable level of safety may be used if approved by the Manager, Los Angeles Aircraft Certification Office (LAACO), FAA. Operators shall submit their requests through an FAA Principal Maintenance Inspector, who may concur or comment and then send it to the Manager, LAACO.

Note 3: Information concerning the existence of approved alternative methods of compliance with this AD, if any, may be obtained from the LAACO.

(d) Special flight permits will not be issued.

(e) This amendment becomes effective on February 25, 2003.

Issued in Fort Worth, Texas, on January 11, 2003.

David A. Downey,

Manager, Rotorcraft Directorate, Aircraft Certification Service.

[FR Doc. 03–1189 Filed 1–17–03; 8:45 am]

BILLING CODE 4910–13–U

DEPARTMENT OF HEALTH AND HUMAN SERVICES

Food and Drug Administration

21 CFR Part 1271

[Docket No. 97N–484R]

Human Cells, Tissues, and Cellular and Tissue-Based Products; Establishment Registration and Listing

AGENCY: Food and Drug Administration, HHS.

ACTION: Final rule; delay of effective date.

SUMMARY: The Food and Drug Administration (FDA) is further delaying, until January 21, 2004, the effective date for requiring establishments that engage in the recovery, screening, testing, processing, storage, or distribution of all human cells, tissues, and cellular and tissue-

based products (HCT/Ps) not currently regulated under section 361 of the Public Health Service Act (PHS Act) and part 1270 (21 CFR part 1270) to register with FDA and list their HCT/Ps. FDA is taking this action to help ensure that the effective date for this rule is closer to the effective date of the anticipated finalization of the remaining proposed rules involving HCT/Ps.

DATES: The effective date for 21 CFR 207.20(f), 807.20(d), and 1271.3(d)(2) that published in the **Federal Register** on January 19, 2001 (66 FR 5447) is delayed from January 21, 2003, to a new effective date of January 21, 2004.

FOR FURTHER INFORMATION CONTACT: Paula S. McKeever, Center for Biologics Evaluation and Research (HFM–17), Food and Drug Administration, 1401 Rockville Pike, suite 200N, Rockville, MD 20852–1448, 301–827–6210.

SUPPLEMENTARY INFORMATION:

I. Background

We, FDA, are putting in place a new comprehensive approach to the regulation of HCT/Ps. The goal of the new approach is to improve protection of the public health without imposing unnecessary restrictions on research, development, or the availability of new products. The new comprehensive approach to the regulation of different types of HCT/Ps is intended to be commensurate with the public health risks presented, enabling us to use our resources more effectively, increase consistency, and improve efficiency.

Since 1997, when we announced our comprehensive regulatory approach for HCT/Ps, we have published three proposed rules and finalized one of them:

• *The registration proposed rule*: ''Establishment Registration and Listing for Manufacturers of Human Cellular and Tissue-Based Products (63 FR 26744, May 14, 1998);

• *The registration final rule*: ''Human Cells, Tissues, and Cellular and Tissue-Based Products; Establishment Registration and Listing'' (66 FR 5447, January 19, 2001);

• *The donor-suitability proposed rule*: ''Suitability Determination for Donors of Human Cellular and Tissue-Based Products'' (64 FR 52696, September 30, 1999); and

• *The GTP (good tissue practices) proposed rule*: ''Current Good Tissue Practice for Manufacturers of Human Cellular and Tissue-Based Products; Inspection and Enforcement'' (66 FR 1508, January 8, 2000).

When the donor-suitability and the GTP proposed rules are finalized, the implementation of the comprehensive regulatory approach for HCT/Ps will be complete.

In all three proposed rules, we used the term ''human cellular and tissue-based products.'' In the registration final rule, we changed this term to ''human cells, tissues, and cellular and tissue-based products'' (HCT/Ps) in response to public comment. This change in terminology is a clarification and does not affect the scope of the definition in 21 CFR 1271.3(d), which continues to encompass an array of articles containing or consisting of human cells or tissues, and intended for implantation, transplantation, infusion, or transfer into human recipients, including investigational products. In the final rule, HCT/P is defined to include HCT/Ps at all stages of manufacture, from recovery through distribution.

Initially, we had intended to finalize and implement the registration proposed rule at the same time we finalized and implemented the two other HCT/P rules that would make up part 1271 (21 CFR part 1271) in its entirety. However, we issued the registration final rule, before finalizing the two remaining portions of part 1271 because of concerns raised about the safety of human tissue, which led us to believe that accelerating the collection of basic information about the rapidly growing tissue industry was vital. Because the registration final rule was published before the other two final rules, we decided to implement staggered effective dates so that certain HCT/Ps would fall within the scope of the new rule later when GTP requirements and enforcement provisions are finalized. This would ensure that certain products, such as heart valves and dura mater that are currently regulated as devices, would not be unintentionally and prematurely shifted into an incomplete regulatory scheme. Therefore, in the final registration rule, we required registration and listing first by those establishments that engage in the recovery, screening, testing, processing, storage, or distribution of human tissue intended for transplantation currently regulated under section 361 of the PHS Act (42 U.S.C. 264) and the regulations in part 1270. Establishments that manufactured HCT/Ps described in § 1271.3(d)(1) were required to register within 30 days after the effective date of the registration final rule, i.e., May 4, 2001. Establishments that manufacture all other HCT/Ps, as described in § 1271.3(d)(2), were required to register 2 years after publication of the registration final rule, by January 21, 2003.

The registration final rule also established §§ 207.20(f) and 807.20(d) (21 CFR 207.20(f) and 807.20(d)), which required establishments that manufacture HCT/Ps regulated as drugs, biological products, and devices to register and list their products following the procedures in part 1271 instead of the procedures in 21 CFR parts 207 and 807. The effective date of §§ 207.20(f) and 807.20(d) is also staggered until January 21, 2003, because §§ 207.20(f) and 807.20(d) is not applicable until § 1271.3(d)(2) becomes effective. We expected to have finalized the donor suitability and the GTP proposed rules by this date. However, we will not complete the rulemaking process for the proposed donor suitability and GTP rules by January 21, 2003.

II. Reason for Staggered Effective Dates

Staggering the effective dates of this regulation permitted us to begin collecting important registration and listing information from those establishments currently regulated under part 1270, while continuing to proceed through rulemaking to develop the remainder of part 1271. We believed that this action would prevent an unintentional gap in the regulation of certain currently regulated HCT/Ps, permit an orderly implementation process, and avoid duplicative information collection. If we instead implemented the registration final rule for all HCT/Ps at the same time, certain HCT/Ps, such as heart valves and dura mater that are currently regulated as devices, would no longer be regulated as devices but rather would shift into the regulatory scheme under part 1271. By implementing a staggered effective date for such products, we avoided a premature shift that essentially would have left these products unregulated until the donor suitability and GTP rulemaking process is completed. FDA also staggered the effective dates of the registration final rule to ensure the orderly implementation of the HCT/P regulations.

III. Need for Further Delay of Effective Date

In the registration final rule, we stated that unanticipated delays in completing the rulemaking for the remainder of part 1271 could occur, and if so, we would consider whether to extend the staggered effective date for some or all of the affected HCT/Ps. Due to the numerous comments submitted to FDA regarding the proposed donor suitability and GTP rules, we will not be able to finalize these rules by January 21, 2003. We have concluded that implementing the registration final rule under the

staggered effective date for the remaining HCT/Ps would be contrary to the public interest in that certain products would become unregulated unless and until the GTP and donor suitability rules are finalized. For HCT/Ps subject to the staggered effective date, requiring registration without adequate enforcement provisions, such as those proposed in the GTP rule, would be premature and possibly ineffective. Establishments that manufacture HCT/Ps covered by the staggered effective date have been registering voluntarily, and FDA is willing to continue accepting such voluntary registrations.

FDA, for good cause based on the reasons stated previously, finds that notice and public procedure to delay the effective date are unnecessary and contrary to the public interest (5 U.S.C. 553(b)(3)(B)). Therefore, we are delaying the effective date of §§ 207.20(f), 807.20(d), and 1271.3(d)(2) for 1 year. The new effective date is January 21, 2004.

Dated: January 8, 2003.

Margaret M. Dotzel,

Assistant Commissioner for Policy.

[FR Doc. 03–1207 Filed 1–17–03; 8:45 am]

BILLING CODE 4160–01–S

DEPARTMENT OF THE TREASURY

Internal Revenue Service

26 CFR Part 301

[TD 9037]

RIN 1545–AY52

Disclosure of Return Information to the Bureau of the Census

AGENCY: Internal Revenue Service (IRS), Treasury.

ACTION: Final regulations and removal of temporary regulations.

SUMMARY: This document contains regulations relating to the list of items of tax information disclosed to the Bureau of the Census. These regulations reflect an agreement between the IRS and the Bureau of the Census as to items of tax information needed to more effectively meet the Bureau of the Census' program objectives as authorized under chapter 5 of title 13, United States Code (U.S.C.), including the Longitudinal Employer-Household Dynamics (LEHD) project and the Survey of Income and Program Participation (SIPP) project.

DATES: *Effective Date:* These regulations are effective January 21, 2003.

FOR FURTHER INFORMATION CONTACT: Christine Irwin, (202) 622–4570 (not a toll-free number).

SUPPLEMENTARY INFORMATION:

Background

This document contains amendments to 26 CFR part 301 under section 6103(j) of the Internal Revenue Code (Code). On February 13, 2001, the **Federal Register** published temporary regulations (TD 8943) regarding tax information disclosed to the Bureau of the Census for use in the LEHD and SIPP projects (66 FR 9957), and a notice of proposed rulemaking (REG–121109–00) cross-referencing the temporary regulations (66 FR 9991). A correction to the notice of proposed rulemaking by cross-reference to the temporary regulations was published on March 23, 2001 (66 FR 16161). Three comments on these temporary regulations were received and considered, but no public hearing was requested or held. After consideration of the comments, the Treasury decision adopts the regulations as proposed with certain changes and removes the corresponding temporary regulations.

The changes include corrections to punctuation and clarification of certain terms used in the regulations, *e.g.*, references to Form SS–4 as a ''form'' as opposed to a tax ''return.'' Additional changes include adopting the generic term ''location code'' to refer to locations of IRS offices from which tax information is retrieved. Changes also include using the terms ''area/district office'' and ''campus/service'' center as examples of location codes. The tax information disclosed to the Bureau of the Census is retrieved from older files, as well as current files. The older information is retrieved from files which contain the terms ''district offices'' and ''service centers'' as the location codes, while the more recent information is retrieved from files that use the terms ''area offices'' and ''campuses'' (in addition to other location codes). Although the terms ''district offices'' and ''service centers'' are no longer used by the IRS, having been replaced by the terms ''area offices'' and ''campuses'' respectively, as a result of the IRS reorganization mandated by section 1001 of the IRS Restructuring and Reform Act of 1998, the regulations' reference to ''location code'' will encompass all of these terms to ensure that tax information may be retrieved from both older and more current files.

Also, the final regulations narrow the tax information to be disclosed to the Bureau of the Census under § 301.6103(j)(1)–1(b)(3)(xxviii) pertaining to ''Gross Distributions from Form 1099–R.'' Although the temporary regulations authorized the disclosure of all gross distributions from Form 1099–R under § 301.6103(j)(1)–1T(b)(3)(xxviii), the Bureau of the Census needs only tax information related to distributions from employer-sponsored and individual retirement plans, according to a letter sent to the IRS from the Secretary of Commerce dated October 4, 2002. Therefore, the final regulations authorize the disclosure only of distributions from employer-sponsored and individual retirement plans from the Forms 1099–R under § 301.6103(j)(1)–1(b)(3)(xxviii).

The final regulations also clarify the phrase ''return information reflected on returns''—language that was incorporated into § 301.6103(j)(1)–1 when the regulations were first promulgated in 1980 (*see* 45 FR 65561). The phrase ''return information reflected on returns'' is used in the regulations to describe the type of return information that may be disclosed to agencies under sections 6103(j)(1)(A) and (B) of the Code. (The phrase ''return information reflected on returns'' encompasses the phrases used in the statute under section 6103(j)(1)(A) and (B) of the Code that refer to ''return information reflected thereon'' and ''return information reflected on returns of corporations.'') The legislative history of section 6103(j)(1)(A) of the Code, authorizing the disclosure of ''returns'' and ''return information reflected thereon'' to officers and employees of the Bureau of the Census, does not specifically define the phrase ''return information reflected thereon.'' Nor does the legislative history of section 6103(j)(1)(B) of the Code, authorizing the disclosure of ''return information reflected on returns of corporations'' to officers and employees of the Bureau of Economic Analysis, define the phrase ''return information reflected on returns of corporations.'' These final regulations clarify the concept of ''return information reflected on returns.'' Although the legislative history does not explicitly define the concept of ''return information reflected on returns,'' it does use the term ''information from tax returns'' and expresses Congress' intent that only ''limited information'' for statistical purposes should be provided to the Bureau of the Census and the Bureau of Economic Analysis. The legislative history does describe the type of information that the IRS provided to agencies when section 6103(j)(1) and (2) of the Code was enacted in the Tax Reform Act of 1976. This information included IRS transcript cards that

summarized information from 500 to 1,000 returns of the largest corporations, taxpayer names, addresses, employer identification numbers, gross receipts, accounting periods, industry codes, and sample codes. (*See* Staff of Joint Committee on Internal Revenue Taxation, 94th Cong., 2d Sess., Tax Revision Issues—1976 (H.R. 10612), No. 6: Administrative Matters, at 40–41 (Comm. Print, April 14, 1976) (Joint Committee Report)). According to the legislative history, the ''sample code'' provided the ''sampling process used by the IRS with respect to its Statistics of Income (not with respect to audit, etc.). * * * '' *See* Joint Committee Report at 41. These sample codes were not information submitted by taxpayers on tax returns filed with the IRS. Rather, these codes were information generated by the IRS in conjunction with returns and disclosed by the IRS to at least one agency for statistical purposes. Therefore, when Congress enacted section 6103(j)(1)(A) and (B) of the Code in 1976, adopting the language ''return information reflected thereon'' and ''such return information reflected on returns of corporations'' to describe the type of information that could be disclosed to agencies for statistical purposes, the information described includes not only information on returns, but also information derived from the processing of such returns, and/or information related to the establishment and maintenance of taxpayer information in IRS data bases, such as sample codes. Therefore, these final regulations clarify the phrase ''return information reflected on returns'' by stating that it includes, but is not limited to, information on returns, information derived from processing such returns, and information derived from the Social Security Administration (SSA) and other sources for the purposes of establishing and maintaining taxpayer information relating to returns. This includes information derived from returns and Forms SS–4 ''Application for Employer Identification Number,'' monthly corrections of, and additions to, taxpayer information contained in IRS and SSA databases (*e.g.*, taxpayer address and name changes) that are obtained from SSA and other sources, and computer codes compiled by the IRS and the SSA derived from returns and/or tax forms and integrated within taxpayer data bases.

Further, these final regulations clarify a restriction that was imposed by the temporary regulations with respect to the disclosure of tax information to the Bureau of the Census. Specifically, the explanation of provisions section to the temporary regulations stated that information will be furnished under the temporary regulations only for the purposes of conducting the LEHD project and/or SIPP/SSA project as specified in the request letters and with the understanding that the information will be used strictly in accordance with the provisions of the Code pertaining to confidentiality (*see* 66 FR 9958 under ''Explanation of Provisions'' of the preamble). These tax disclosure restrictions to the LEHD and SIPP projects were included during the inception of an agreement entered into between the IRS and the Bureau of the Census that provides detailed criteria for the review and approval by the IRS of Census Bureau projects that use Federal tax information. This inter-agency agreement between the IRS and the Bureau of the Census dated September 15, 2000, is entitled ''Criteria for the Review and Approval of Census Projects that Use Federal Tax Information'' (inter-agency agreement) and provides detailed procedures for implementing the requirements set forth in § 301.6103(j)(1)–1(d) of the regulations. According to § 301.6103(j)(1)–1(d) of the regulations and the inter-agency agreement, the IRS must approve the proposed uses for tax information disclosed on a project-by-project basis. The implementation of this inter-agency agreement has strengthened the IRS' review process for approving proposed uses for tax information disclosed to the Bureau of the Census. It has also improved the ability of the IRS and the Bureau of the Census to ensure that appropriate procedures, especially relating to safeguards and approved usage documentation, are employed for access to, and use of, Federal tax information.

Although the explanation of provisions section to the temporary regulations stated that the additional tax information authorized for disclosure under the temporary regulations under § 301.6103(j)(1)–1T(b)(2), (3), and (5) would be disclosed only for purposes of conducting the LEHD and/or SIPP projects, the actual language of the temporary regulations under § 301.6103(j)(1)–1T(b)(2), (3), and (5) did not contain such a limitation. Rather, the temporary regulations adopted the same language describing the authorized use of the tax information by the Bureau of the Census that appeared in § 301.6103(j)(1)–1(b)(2), (3), and (5) of the previous regulations (prior to the implementation of the temporary regulations). This language authorizes a broader use of the disclosed tax information by the Bureau of the Census for demographic and economic statistics programs, censuses, and surveys authorized by chapter 5 of title 13, U.S.C. These final regulations do not change this language pertaining to the authorized uses of the tax information by the Bureau of the Census in § 301.6103(j)(1)–1 (b)(2), (3), and (5). Accordingly, these final regulations permit the disclosure of tax information to the Bureau of the Census, not only for the LEHD and SIPP projects, but also to the extent necessary in conducting and preparing demographic and economic statistics programs, censuses, and surveys, as authorized by chapter 5 of title 13, U.S.C., and as approved for these purposes by the IRS according to procedures reflected in the September 15, 2000 inter-agency agreement described above and § 301.6103(j)(1)–1(d) of the regulations.

Summary of Comments

With respect to the three comments received in response to the temporary regulations, two strongly supported, and one objected to, the additional disclosure of tax information to the Bureau of the Census. Specifically, two of the comments supported the additions to the list of items of tax information disclosed to the Bureau of the Census for use in the SIPP project. One comment stated that these additional disclosures to the Census Bureau will make it possible to provide an accurate measure of prospective pension benefits that is critically important in providing estimates of the future economic well-being of an increasingly large segment of the population and will provide legislators, policy analysts, and researchers with a much more useful measure of the net government transfers to different households than that provided by the current SIPP. These additional disclosures will also provide a crucial source of information for assessing potential reforms of the Social Security System, according to the comment.

The third comment expressed opposition to the compiling of data by the Bureau of Census beyond that necessary to determine population distribution for the purpose of legislative redistricting. This objection does not recognize that the Bureau of the Census is authorized under chapter 5 of title 13, U.S.C., to conduct various demographic, economic, and agricultural statistics programs and censuses and related program evaluation that includes the LEHD and SIPP projects. Therefore, the comment was not adopted.

Special Analyses

It has been determined that this Treasury decision is not a significant regulatory action as defined in Executive Order 12866. Therefore, a regulatory assessment is not required. It also has been determined that section 553(b) of the Administrative Procedure Act (5 U.S.C. chapter 5) does not apply to these regulations, and because the regulations do not impose a collection of information on small entities, the Regulatory Flexibility Act (5 U.S.C. chapter 6) does not apply. Pursuant to section 7805(f) of the Code, the notice of proposed rulemaking preceding these regulations was submitted to the Chief Counsel for Advocacy of the Small Business Administration for comment on its impact on small business.

Drafting Information

The principal author of these regulations is Christine Irwin, Office of the Associate Chief Counsel, Procedure & Administration (Disclosure & Privacy Law Division).

List of Subjects in 26 CFR Part 301

Employment taxes, Estate taxes, Excise taxes, Gift taxes, Income taxes, Penalties, Reporting and record keeping requirements.

Adoption of Amendments to the Regulations

Accordingly, 26 CFR part 301 is amended as follows:

PART 301—PROCEDURE AND ADMINISTRATION

Paragraph 1. The authority citation for part 301 is amended by removing the entry for ''Section 301.6103(j)(1)–lT'' and continues to read in part as follows:

Authority: 26 U.S.C. 7805 * * *

Par. 2. Section 301.6103(j)(1)–1 is revised to read as follows:

§ 301.6103(j)(1)–1 Disclosures of return information reflected on returns to officers and employees of the Department of Commerce for certain statistical purposes and related activities.

(a) *General rule.* Pursuant to the provisions of section 6103(j)(1) of the Internal Revenue Code and subject to the requirements of paragraph (d) of this section, officers or employees of the Internal Revenue Service will disclose return information (as defined by section 6103(b)(2) but not including return information described in section 6103(o)(2)) reflected on returns to officers and employees of the Department of Commerce to the extent, and for such purposes as may be, provided by paragraphs (b) and (c) of this section. Further, in the case of any disclosure of return information reflected on returns so provided by paragraphs (b) and (c) of this section, the tax period or accounting period to which such information relates will also be disclosed. ''Return information reflected on returns'' includes, but is not limited to, information on returns, information derived from processing such returns, and information derived from the Social Security Administration and other sources for the purposes of establishing and maintaining taxpayer information relating to returns.

(b) *Disclosure of return information reflected on returns to officers and employees of the Bureau of the Census.*

(1) Officers or employees of the Internal Revenue Service will disclose the following return information reflected on returns of individual taxpayers to officers and employees of the Bureau of the Census for purposes of, but only to the extent necessary in, conducting and preparing, as authorized by chapter 5 of title 13, United States Code, intercensal estimates of population and income for all geographic areas included in the population estimates program and demographic statistics programs, censuses, and related program evaluation:

(i) Taxpayer identity information (as defined in section 6103(b)(6) of the Internal Revenue Code), validity code with respect to the taxpayer identifying number (as described in section 6109), and taxpayer identity information of spouse and dependents, if reported.

(ii) Location codes (including area/district office and campus/service center codes).

(iii) Marital status.

(iv) Number and classification of reported exemptions.

(v) Wage and salary income.

(vi) Dividend income.

(vii) Interest income.

(viii) Gross rent and royalty income.

(ix) Total of—

(A) Wages, salaries, tips, etc.;

(B) Interest income;

(C) Dividend income;

(D) Alimony received;

(E) Business income;

(F) Pensions and annuities;

(G) Income from rents, royalties, partnerships, estates, trusts, etc.;

(H) Farm income;

(I) Unemployment compensation; and

(J) Total Social Security benefits.

(x) Adjusted gross income.

(xi) Type of tax return filed.

(xii) Entity code.

(xiii) Code indicators for Form 1040, Form 1040 (Schedules A, C, D, E, F, and SE), and Form 8814.

(xiv) Posting cycle date relative to filing.

(xv) Social Security benefits.

(2) Officers or employees of the Internal Revenue Service will disclose to officers and employees of the Bureau of the Census for purposes of, but only to the extent necessary in, conducting, as authorized by chapter 5 of title 13, United States Code, demographic, economic, and agricultural statistics programs and censuses and related program evaluation—

(i) From the business master files of the Internal Revenue Service—the taxpayer name directory and entity records consisting of taxpayer identity information (as defined in section 6103(b)(6)) with respect to taxpayers engaged in a trade or business, the principal industrial activity code, the filing requirement code, the employment code, the physical location, the location codes (including area/district office and campus/service center codes), and monthly corrections of, and additions to, such entity records;

(ii) From Form SS–4—all information reflected on such form;

(iii) From an employment tax return—

(A) Taxpayer identifying number (as described in section 6109) of the employer;

(B) Total compensation reported;

(C) Master file tax account code (MFT);

(D) Taxable period covered by such return;

(E) Employer code;

(F) Document locator number;

(G) Record code;

(H) Total number of individuals employed in the taxable period covered by the return;

(I) Total taxable wages paid for purposes of chapter 21; and

(J) Total taxable tip income reported for purposes of chapter 21;

(iv) From Form 1040 (Schedule SE)—

(A) Taxpayer identifying number of self-employed individual;

(B) Business activities subject to the tax imposed by chapter 21;

(C) Net earnings from farming;

(D) Net earnings from nonfarming activities;

(E) Total net earnings from self-employment; and

(F) Taxable self-employment income for purposes of chapter 2;

(v) Total Social Security taxable earnings; and

(vi) Quarters of Social Security coverage.

(3) Officers or employees of the Internal Revenue Service will disclose the following business related return information reflected on returns of taxpayers to officers and employees of

the Bureau of the Census for purposes of, but only to the extent necessary in, conducting and preparing, as authorized by chapter 5 of title 13, United States Code, demographic and economic statistics programs, censuses, and surveys. (The ''returns of taxpayers'' include, but are not limited to: Form 941; Form 990 series; Form 1040 series and Schedules C and SE; Form 1065 and all attending schedules and Form 8825; Form 1120 series and all attending schedules and Form 8825; Form 851; Form 1096; and other business returns, schedules and forms that the Internal Revenue Service may issue.):

(i) Taxpayer identity information (as defined in section 6103(b)(6)) including parent corporation, shareholder, partner, and employer identity information.

(ii) Gross income, profits, or receipts.

(iii) Returns and allowances.

(iv) Cost of labor, salaries, and wages.

(v) Total expenses or deductions.

(vi) Total assets.

(vii) Beginning- and end-of-year inventory.

(viii) Royalty income.

(ix) Interest income, including portfolio interest.

(x) Rental income, including gross rents.

(xi) Tax-exempt interest income.

(xii) Net gain from sales of business property.

(xiii) Other income.

(xiv) Total income.

(xv) Percentage of stock owned by each shareholder.

(xvi) Percentage of capital ownership of each partner.

(xvii) End-of-year code.

(xviii) Months actively operated.

(xix) Principal industrial activity code, including the business description.

(xx) Total number of documents and the total amount reported on the Form 1096 transmitting Forms 1099–MISC.

(xxi) Form 941 indicator and business address on Form 1040 (Schedule C).

(xxii) Consolidated return indicator.

(xxiii) Wages, tips, and other compensation.

(xxiv) Social Security wages.

(xxv) Deferred wages.

(xxvi) Social Security tip income.

(xxvii) Total Social Security taxable earnings.

(xxviii) Gross distributions from employer-sponsored and individual retirement plans from Form 1099–R.

(4) Officers or employees of the Internal Revenue Service will disclose return information reflected on returns of taxpayers contained in the exempt organization master files of the Internal Revenue Service to officers and employees of the Bureau of the Census for purposes of, but only to the extent necessary in, conducting and preparing, as authorized by chapter 5 of title 13, United States Code, economic censuses. This return information reflected on returns of taxpayers consists of taxpayer identity information (as defined in section 6103(b)(6)), activity codes, and filing requirement code, and monthly corrections of, and additions to, such information.

(5) Subject to the requirements of paragraph (d) of this section and § 301.6103(p)(2)(B)–1, officers or employees of the Social Security Administration to whom the following return information reflected on returns has been disclosed as provided by section 6103(l)(1)(A) or (l)(5) may disclose such information to officers and employees of the Bureau of the Census for necessary purposes described in paragraph (b)(2) or (3) of this section:

(i) From Form SS–4—all information reflected on such form.

(ii) From Form 1040 (Schedule SE)—

(A) Taxpayer identifying number of self-employed individual;

(B) Business activities subject to the tax imposed by chapter 21;

(C) Net earnings from farming;

(D) Net earnings from nonfarming activities;

(E) Total net earnings from self-employment; and

(F) Taxable self-employment income for purposes of chapter 2.

(iii) From Form W–2, and related forms and schedules—

(A) Social Security number;

(B) Employer identification number;

(C) Wages, tips, and other compensation;

(D) Social Security wages; and

(E) Deferred wages.

(iv) Total Social Security taxable earnings.

(v) Quarters of Social Security coverage.

(6)(i) Officers or employees of the Internal Revenue Service will disclose the following return information (but not including return information described in section 6103(o)(2)) reflected on returns of corporations with respect to the tax imposed by chapter 1 to officers and employees of the Bureau of the Census for purposes of, but only to the extent necessary in, developing and preparing, as authorized by law, the Quarterly Financial Report:

(A) From the business master files of the Internal Revenue Service—

(*1*) Taxpayer identity information (as defined in section 6103(b)(6)), including parent corporation identity information;

(*2*) Document code;

(*3*) Location codes (including area/district office and campus/service center codes);

(*4*) Consolidated return and final return indicators;

(*5*) Principal industrial activity code;

(*6*) Partial year indicator;

(*7*) Annual accounting period;

(*8*) Gross receipts less returns and allowances; and

(*9*) Total assets.

(B) From Form SS–4—

(*1*) Month and year in which such form was executed;

(*2*) Taxpayer identity information; and

(*3*) Principal industrial activity, geographic, firm size, and reason for application codes.

(ii) Subject to the requirements of paragraph (d) of this section and § 301.6103(p)(2)(B)–1, officers or employees of the Social Security Administration to whom return information reflected on returns of corporations described in paragraph (b)(6)(i)(B) of this section has been disclosed as provided by section 6103(l)(1)(A) or (l)(5) may disclose such information to officers and employees of the Bureau of the Census for a purpose described in this paragraph (b)(6). (iii) Return information reflected on employment tax returns disclosed pursuant to paragraphs (b)(2)(iii) (A), (B), (D), (I) and (J) of this section may be used by officers and employees of the Bureau of the Census for the purpose described in and subject to the limitations of this paragraph (b)(6).

(c) *Disclosure of return information reflected on returns of corporations to officers and employees of the Bureau of Economic Analysis.* (1) Officers or employees of the Internal Revenue Service will disclose to officers and employees of the Bureau of Economic Analysis for purposes of, but only to the extent necessary in, conducting and preparing, as authorized by law, statistical analyses return information consisting of Statistics of Income transcript-edit sheets containing return information reflected on returns of designated classes or categories of corporations with respect to the tax imposed by chapter 1 of the Internal Revenue Code and microfilmed records of return information reflected on such returns where needed for further use in connection with such conduct or preparation.

(2) Subject to the requirements of paragraph (d) of this section and § 301.6103(p)(2)(B)–1, officers and employees of the Social Security Administration to whom the following return information reflected on returns of designated classes or categories of corporations has been disclosed as

provided by section 6103(l)(1)(A) or (l)(5) may disclose such information to officers and employees of the Bureau of Economic Analysis for necessary purposes described in paragraph (c)(1) of this section:

(i) From Form SS–4—Principal industrial activity and geographic codes.

(ii) From an employment tax return—

(A) Total compensation reported; and

(B) Taxable wages paid for purposes of chapter 21 to each employee.

(d) *Procedures and restrictions.* Disclosure of return information reflected on returns by officers or employees of the Internal Revenue Service or the Social Security Administration as provided by paragraphs (b) and (c) of this section will be made only upon written request to the Commissioner of Internal Revenue by the Secretary of Commerce describing—

(1) The particular return information reflected on returns to be disclosed;

(2) The taxable period or date to which such return information reflected on returns relates; and

(3)(i) The particular purpose for which the return information reflected on returns is to be used, and designating by name and title the officers and employees of the Bureau of the Census or the Bureau of Economic Analysis to whom such disclosure is authorized.

(ii) No such officer or employee to whom return information reflected on returns is disclosed pursuant to the provisions of paragraph (b) or (c) of this section shall disclose such information to any person, other than the taxpayer to whom such return information reflected on returns relates or other officers or employees of such bureau whose duties or responsibilities require such disclosure for a purpose described in paragraph (b) or (c) of this section, except in a form which cannot be associated with, or otherwise identify, directly or indirectly, a particular taxpayer. If the Internal Revenue Service determines that the Bureau of the Census or the Bureau of Economic Analysis, or any officer or employee thereof, has failed to, or does not, satisfy the requirements of section 6103(p)(4) of the Internal Revenue Code or regulations or published procedures thereunder (see § 601.601(d)(2) of this chapter), the Internal Revenue Service may take such actions as are deemed necessary to ensure that such requirements are or will be satisfied, including suspension of disclosures of return information reflected on returns otherwise authorized by section 6103 (j)(1) and paragraph (b) or (c) of this section, until the Internal Revenue Service determines that such requirements have been or will be satisfied.

(e) *Effective date.* This section is applicable to the Bureau of the Census on January 21, 2003.

§ 301.6103(j)(1)–1T [Removed]

Par. 3. Section 301.6103(j)(1)–1T is removed.

David A. Mader,

Assistant Deputy Commissioner of Internal Revenue.

Approved: December 20, 2002.

Pamela F. Olson,

Assistant Secretary of the Treasury (Tax Policy).

[FR Doc. 03–871 Filed 1–17–03; 8:45 am]

BILLING CODE 4830–01–P

DEPARTMENT OF THE TREASURY

Internal Revenue Service

26 CFR Parts 301 and 602

[TD 9036]

RIN 1545–AY77

Disclosure of Returns and Return Information by Other Agencies

AGENCY: Internal Revenue Service (IRS), Treasury.

ACTION: Final regulations and removal of temporary regulations.

SUMMARY: This document contains a final regulation relating to the disclosure of returns and return information by Federal, state and local agencies other than the IRS. The final regulation permits the IRS to authorize agencies with access to returns and return information under section 6103 of the Internal Revenue Code (Code) to redisclose returns and return information, with the approval of the Commissioner of Internal Revenue (Commissioner), to any authorized recipient set forth in section 6103, subject to the same conditions and restrictions, and for the same purposes, as if the recipient had received the information from the IRS directly.

DATES: This regulation is effective January 21, 2003.

FOR FURTHER INFORMATION CONTACT: Julie C. Schwartz, 202–622–4570 (not a toll-free number).

SUPPLEMENTARY INFORMATION:

Paperwork Reduction Act

The collection of information contained in this final regulation has been reviewed and approved by the Office of Management and Budget in accordance with the Paperwork Reduction Act of 1995 (44 U.S.C. 4507(d)) under control number 1545–1757. The collection of information in this regulation is in § 301.6103(p)(2)(B)–1. This information is required for the Commissioner to authorize the disclosure of returns and return information from agencies with access to returns and return information under section 6103 to other authorized recipients of returns and return information in accordance with section 6103.

An agency may not conduct or sponsor, and a person is not required to respond to, a collection of information unless the collection of information displays a valid OMB control number.

The estimated annual burden per respondent varies from one half-hour to two hours, depending on individual circumstances, with an estimated average of one hour.

Comments concerning the accuracy of this burden estimate and suggestions for reducing this burden should be sent to the Internal Revenue Service, Attn: IRS Reports Clearance Officer, W:CAR:MP:FP:S Washington, DC 20224, and to the Office of Management and Budget, Attn: Desk Officer for the Department of the Treasury, Office of Information and Regulatory Affairs, Washington, DC 20503.

Books or records relating to a collection of information must be retained as long as their contents may become material in the administration of any internal revenue law. Generally, tax returns and return information are confidential, as required by 26 U.S.C. 6103.

Background

This document contains amendments to 26 CFR parts 301 and 602. On December 13, 2001, a notice of proposed rulemaking (REG–105344–01) was published in the **Federal Register** (66 FR 64386). No comments were received from the public in response to the notice of proposed rulemaking. No public hearing was requested or held. The proposed regulations are adopted by this Treasury decision.

Explanation of Provisions

The final regulation expands the number of agencies that may redisclose returns and return information if authorized by the Commissioner to any Federal, state or local agency that receives such information under section 6103. Similarly, it expands the universe of authorized recipients of returns and return information pursuant to this redisclosure authority to any recipient authorized to receive returns and return information in accordance with section

6103. All redisclosures by agencies pursuant to this regulation will be made subject to the same conditions, restrictions, safeguards, recordkeeping requirements, and civil and criminal penalties that would apply if the disclosure were made by the IRS. Federal, state and local agencies making disclosures of return information under the final regulation will continue to provide to the IRS certain information regarding disclosures made pursuant to this authority, in order for the IRS to fulfill its reporting requirements under section 6103(p).

Special Analyses

It has been determined that this Treasury decision is not a significant regulatory action as defined in Executive Order 12866. Therefore, a regulatory assessment is not required. It has also been determined that section 553(b) of the Administrative Procedure Act (5 U.S.C. chapter 5) does not apply to these regulations. Pursuant to the Regulatory Flexibility Act (5 U.S.C. chapter 6), it is hereby certified that this final rule will not have a significant economic impact on a substantial number of small entities. The disclosure authorized by the rule is voluntary on the part of small governmental jurisdictions and, as discussed earlier in this preamble, the burden associated with requesting authorization from the Commissioner to disclose returns and return information, and to maintain the necessary records concerning the disclosure of return information, is minimal. Accordingly, a Regulatory Flexibility Analysis is not required. Pursuant to section 7805(f) of the Code, the proposed regulations preceding these regulations were submitted to the Chief Counsel of the Small Business Administration for comment on their impact on small businesses.

Drafting Information

The principal author of these regulations is Julie C. Schwartz, Office of the Associate Chief Counsel (Procedure and Administration), Disclosure and Privacy Law Division.

List of Subjects

26 CFR Part 301

Employment taxes, Estate taxes, Excise taxes, Gift taxes, Income taxes, Penalties, Reporting and Recordkeeping requirements.

26 CFR Part 602

Reporting and recordkeeping requirements.

Amendments to the Regulations

Accordingly, 26 CFR parts 301 and 602 are amended as follows:

PART 301—PROCEDURE AND ADMINISTRATION

Paragraph 1. The authority citation for part 301 is amended by adding an entry in numerical order to read as follows:

Authority: 26 U.S.C. 7805 * * *

Section 301.6103(p)(2)(B)-1 also issued under 26 U.S.C. 6103(p)(2); * * *

Par. 2. Section 301.6103(p)(2)(B)–1 is added to read as follows:

§ 301.6103(p)(2)(B)–1 Disclosure of Returns and Return Information by Other Agencies.

(a) *General rule.* Subject to the requirements of paragraphs (b), (c), and (d) of this section, returns or return information that have been obtained by a Federal, state or local agency, or its agents or contractors, in accordance with section 6103 (the first recipient) may be disclosed by the first recipient to another recipient authorized to receive such returns or return information under section 6103 (the second recipient).

(b) *Approval by Commissioner.* A disclosure described in paragraph (a) of this section may be made if the Commissioner of Internal Revenue (the Commissioner) determines, after receiving a written request under this section, that such returns or return information are more readily available from the first recipient than from the Internal Revenue Service (IRS). The disclosure authorization by the Commissioner shall be directed to the head of the first recipient and may contain such conditions or restrictions as the Commissioner may prescribe. The disclosure authorization may be revoked by the Commissioner at any time.

(c) *Requirements and restrictions.* The second recipient may receive only returns or return information as authorized by the provision of section 6103 applicable to such second recipient. Any returns or return information disclosed may be used by the second recipient only for a purpose authorized by and subject to any conditions imposed by section 6103 and the regulations thereunder, including, if applicable, safeguards imposed by section 6103(p)(4).

(d) *Records and reports of disclosure.* The first recipient shall maintain to the satisfaction of the IRS a permanent system of standardized records regarding such disclosure authorization described in paragraph (a) of this section and any disclosure of returns and return information made pursuant to such authorization, and shall provide such information as prescribed by the Commissioner in order to enable the IRS to comply with its obligations under section 6103(p)(3) to keep accountings for disclosures and to make annual reports of disclosures to the Joint Committee on Taxation. The information required for reports to the Joint Committee on Taxation must be provided within 30 days after the close of each calendar year. The requirements of this paragraph do not apply to the disclosure of returns and return information as provided by paragraph (a) of this section which, had such disclosures been made directly by the IRS, would not have been subject to the recordkeeping requirements imposed by section 6103(p)(3)(A).

(e) *Effective date.* This section is applicable on January 21, 2003.

§ 301.6103(p)(2)(B)–1T [Removed]

Par. 3. Section 301.6103(p)(2)(B)–1T is removed.

PART 602—OMB CONTROL NUMBERS UNDER THE PAPERWORK REDUCTION ACT

Par. 4. The authority citation for part 602 continues to read as follows:

Authority: 26 U.S.C. 7805.

Par. 5. In § 602.101, paragraph (b) is amended by removing the entry ''301.6103(p)(2)(B)–1T'' from the table and adding the entry ''301.6103(p)(2)(B)–1'' in numerical order to read as follows:

§ 602.101 OMB Control numbers.

* * * * *

(b) * * *

CFR part or section where identified and described	Current OMB control No.
* * * * *	
301.6103(p)(2)(B)–1	1545–1757
* * * * *	

David A. Mader,

Assistant Deputy Commissioner of Internal Revenue.

Approved: December 20, 2002.

Pamela F. Olson,

Assistant Secretary (Tax Policy), Department of the Treasury.

[FR Doc. 03–1158 Filed 1–17–03; 8:45 am]

BILLING CODE 4830–01–P

DEPARTMENT OF DEFENSE

Department of the Navy

32 CFR Part 700

RIN 0703–AA71

United States Navy Regulations

AGENCY: Department of the Navy, DOD.

ACTION: Final rule.

SUMMARY: The Department of the Navy is amending the Navy Regulations, incorporating new subparts, and modifying some existing subparts. This revision will allow the published Navy Regulations to comport with the 1990 Navy Regulations currently in use.

DATES: Effective January 21, 2003.

FOR FURTHER INFORMATION CONTACT: LCDR Jason Baltimore, Legislation and Regulations Branch, Administrative Law Division (Code 13), Office of the Judge Advocate General, 1322 Patterson Avenue SE., Suite 3000, Washington Navy Yard, DC 20374–5066, (703) 604–8208.

SUPPLEMENTARY INFORMATION: On 14 September 1990, the Secretary of the Navy (SECNAV) issued, revised, and amended Navy Regulations (NAVREGS) in accordance with 10 U.S.C Section 6011. These regulations superseded the NAVREGS that were amended in 1978. Since that time, one revision, which reflected changes to the NAVREGS, was published in the **Federal Register**, 64 FR 56061, Oct. 15, 1999. Since the 1999 revision, no additional changes have been published to reflect the current NAVREGS. In accordance with 5 U.S.C. Section 552, the Department of the Navy seeks to publish additional changes to these regulations. It has been determined that invitation of public comment on these changes to the NAVREGS prior to adoption would be impractical and unnecessary, and is therefore not required under the public rule—making provisions of 32 CFR parts 336 and 701. However, interested persons are invited to comment in writing. Written comments received will be considered in making amendments or revisions to 32 CFR 700 or the NAVREGS upon which it is derived. It has been determined that this final rule is not a major rule within the criteria specified in Executive Order 12291 and does not have substantial impact on the public. This submission is a statement of policy and as such can be effective upon publication in the **Federal Register**.

Matters of Regulatory Procedure

Executive Order 12866, Regulatory Planning and Review

This rule does not meet the definition of ''significant regulatory action'' for purposes of E.O. 12866.

Regulatory Flexibility Act

This rule will not have a significant economic impact on a substantial number of small entities for purposes of the Regulatory Flexibility Act (5 U.S.C. Chapter 6).

Paperwork Reduction Act

This rule does not impose collection of information requirements for purposes of the Paperwork Reduction Act (44 U.S.C. Chapter 35, 5 CFR part 1320).

List of Subjects in 32 CFR Part 700

Armed Forces.

For the reasons set forth in the preamble, the Department of the Navy revises 32 CFR part 700 to read as follows:

PART 700—[AMENDED]

1. Section 700.405, paragraph (c)(9) is amended by removing the ''.'' and adding a '';'' at the end of the paragraph; by adding paragraph (c)(10); and by revising paragraph (d)(3) to read as follows:

§ 700.405 Delegated authority and responsibility.

* * * * *

(c) * * *

(10) To exercise authority for intelligence within the Navy.

(d) * * *

(3) Matters essential to naval military administration, such as:

(i) Security;

(ii) Discipline;

(iii) Communications; and

(iv) Matters related to the customs and traditions of the naval service.

* * * * *

2. Section 700.505 is amended by redesignating paragraph (b)(5) as paragraph (b)(6); and adding a new (b)(5) to read as follows:

§ 700.505 Delegated authority and responsibility.

* * * * *

(b)* * *

(5) To exercise authority for intelligence within the Marine Corps.

* * * * *

3. Section 700.701 is amended by revising paragraph (a) to read as follows:

§ 700.701 Titles of Commanders.

(a) The commander of a principal organization of the operating forces of the Navy, as determined by the Chief of Naval Operations, or the officer who has succeeded to such command as provided elsewhere in these regulations, shall have the title ''Commander.'' The name of the organization under the command of such an officer shall be added to form his or her official title, *e.g.*, ''Commander, U.S. Atlantic Fleet.'' Commander, U.S. Atlantic Fleet, Commander, U.S. Pacific Fleet, and Commander, U.S. Naval Forces Europe, may also be referred to as a ''Geographic Fleet Commander.''

* * * * *

4. Section 700.1053 is amended by revising paragraph (a) to read as follows:

§ 700.1053 Commander of a task force.

(a) A geographic fleet commander, and any other naval commander, may detail in command of a task force, or other task command, any eligible officer within his or her command whom he or she desires. All other officers ordered to the task force or the task command shall be considered subordinate to the designated commander.

* * * * *

Dated: January 7, 2003.

J.T. Baltimore,

Lieutenant Commander, Judge Advocate General's Corps, U.S. Navy, Alternate Federal Register Liaison Officer.

[FR Doc. 03–1045 Filed 1–17–03; 8:45 am]

BILLING CODE 3810–FF–P

POSTAL SERVICE

39 CFR Part 501

Authorization To Manufacture and Distribute Postage Meters

AGENCY: Postal Service.

ACTION: Final rule.

SUMMARY: This final rule amends the regulations for postage meter inventory control and for the protection and control of security-related processes and components. A desire to enhance the security of Postal Service revenues motivates these changes. The rule will improve the secure handling of postage meters and their security components by the approved postage meter manufacturers, and will extend the regulations to third-party agents and representatives of the manufacturers.

DATES: The rule is effective January 21, 2003.

FOR FURTHER INFORMATION CONTACT: Wayne Wilkerson, manager of Postage Technology Management, at 703–292–3691, or by fax at 703–292–4050.

SUPPLEMENTARY INFORMATION: The proposed rule was published in the **Federal Register** on April 24, 2002 (67 FR 20077), with a request for submission of comments by May 24, 2002. We received three submissions in response to the solicitation of public comments. The Postal Service gave thorough consideration to the comments it received, modified the proposed rule as appropriate in response to the comments, and now announces adoption of the final rule. We will amend the remaining sections of title 39 CFR part 501 in the near future so that they reflect the changes in the postage meter population and recent changes to regulations published in the *Domestic Mail Manual* regarding postage meters and other postage evidencing systems.

Discussion of Comments

1. One commenter noted that since the Postal Service has control over all distributors of postage meters through the manufacturers, the amendments to the existing regulations make sense only if the manufacturer is allowed to transfer ownership of meters to distributors. The commenter suggested that revising the proposed regulation to allow transfer of ownership would increase competition in the marketplace and put an end to regulations that the commenter perceived as favoring manufacturers who operate a vertically integrated operation over those who use third parties to distribute meters. The commenter suggested that this change would make the regulation by the Postal Service of the security of postage meters in the custody of distributors and other third parties the same whether or not the third party owns, repairs, or distributes the meters.

Any control the Postal Service exercises over a person or concern that controls, distributes, maintains, replaces, repairs, or disposes of meters is currently exercised through the manufacturer. The Postal Service is seeking to standardize and strengthen the level of manufacturer control. The Postal Service does not now allow the transfer of ownership of meters to a third party. Any entity wanting to own meters now must qualify under 39 CFR part 501 to become an approved manufacturer. The entity must be capable of performing all functions required by part 501, including performance of inspections and identifying meters that are defective or tampered. The entity must also be capable of protecting and controlling internal and security components within the scope of § 501.28, as amended by this rule. No substantive change is made to the proposed rule in response to this comment.

2. One commenter requested that the Postal Service provide standard written terms and conditions for manufacturers to include in all future third-party distributor agreements.

Given the variety of relationships that could exist between a manufacturer and a third party that controls, distributes, maintains, replaces, repairs, or disposes of meters, the Postal Service does not believe it is feasible to provide standard written terms and conditions for manufacturers to include in a third-party agreement. All third parties must adhere to applicable regulations, just as the manufacturer does. The applicable regulations include title 39, *Code of Federal Regulations,* part 501, Authorization to Manufacture and Distribute Postage Meters, and *Domestic Mail Manual,* Issue 57, especially section P030, Postage Meters (Postage Evidencing Systems). Manufacturers could consider requiring adherence to these regulations, and any others that may be applicable, in any third-party agreement. No change is made to the proposed rule in response to this comment.

3. One manufacturer with existing third-party relationships to distribute, replace, and dispose of meters suggested in its comment that such existing relationships should be grandfathered and exempt from the new regulations.

The manufacturer is responsible for controlling any third party in accordance with all applicable regulations. Postage Technology Management has the authority to review all existing relationships and the manufacturer's internal controls to ensure compliance. In this final rule, the Postal Service is clarifying the proposed rule in response to this comment.

4. One commenter asked that changes in field distribution relationships not require preapproval by the Postal Service. The time required to obtain such approval would unfairly burden the company and hinder its competitiveness. The commenter suggested that new third-party relationships, with the exception of new field sales relationships, should be presented for approval.

The Postal Service will review and approve third-party relationships only when the relationship has the potential to affect meter security or the security of Postal Service revenue. The Postal Service will not review those relationships commonly known as field sales or dealer relationships unless there is a particular security concern with the dealer or its operations. However, manufacturers must exercise control over their dealers in accordance with Postal Service regulations. In this final rule, the Postal Service is clarifying the proposed rule with respect to relationships with dealers and field sales representatives.

List of Subjects in 39 CFR Part 501

Administrative practice and procedure, Postal Service.

The Amendment

For the reasons set out in this document, the Postal Service is amending 39 CFR part 501 as follows:

PART 501—AUTHORIZATION TO MANUFACTURE AND DISTRIBUTE POSTAGE METERS

1. The authority citation for part 501 continues to read as follows:

Authority: 5 U.S.C. 552(a); 39 U.S.C. 101, 401, 403, 404, 410, 2601, 2605; Inspector General Act of 1978, as amended (Pub. L. 95–452, as amended); 5 U.S.C. App. 3.

2. Revise § 501.22 to read as follows:

§ 501.22 Inventory control.

(a) An authorized manufacturer must maintain sufficient facilities for and records of the distribution, control, storage, maintenance, repair, replacement, and destruction or disposal of all meters and their components to enable accurate accounting thereof throughout the entire meter life cycle. Recordkeeping is required for all meters including newly produced meters, active leased meters, inactive meters, unleased meters, and lost or stolen meters. All such facilities and records are subject to inspection by Postal Service representatives.

(b) If the manufacturer uses a third party to perform functions that may affect meter security, including, but not limited to meter repair, maintenance, and disposal, the manager of Postage Technology Management, Postal Service Headquarters, must review in advance all aspects of the relationship, as they relate to the custody and control of meters, and must specifically authorize in writing the arrangement between the parties.

(1) Postal Service authorization of a third-party relationship for a given function does not extend to any other function. Extension of the third-party relationship to another function must be implemented and approved as if it were a new relationship.

(2) No third-party relationship shall compromise the security of the meter, or of any of its components, including, but not limited to, the hardware, software, communications, and security components, or of any system with

which it interfaces, including, but not limited to, the resetting system, reporting systems, and Postal Service support systems. The functions of the third party with respect to a meter, its components, and the systems with which it interfaces are subject to the same scrutiny as the equivalent functions of the manufacturer.

(3) Any authorized third party must keep adequate facilities for and records of meters and their components in accordance with paragraph (a) of this section. All such facilities and records are subject to inspection by Postal Service representatives, insofar as they are used to distribute, control, store, maintain, repair, replace, destroy, or dispose of meters.

(4) The manufacturer must ensure that any party acting in its behalf in any of the functions described in paragraph (a) of this section maintains adequate facilities, records, and procedures for the security of the meters. Deficiencies in the operations of a third party relating to the custody and control of postage meters, unless corrected in a timely manner, can place at risk a manufacturer's approval to manufacture and/or distribute postage meters.

(5) The Postal Service reserves the right to review all aspects of any third-party relationship when it becomes aware that the relationship poses a threat to meter security under paragraph (b)(2) of this section, whether or not that relationship required authorization under paragraph (b) of this section.

3. Revise § 501.28 to read as follows:

§ 501.28 Protection and control of internal and security components.

Any physical or electronic access to the internal components of a meter, as well as any access to software or security parameters, must be conducted within an approved factory or meter repair facility under the manufacturer's direct control and active supervision. The Postal Service must have checked a meter out of service before any component, software, or security parameter is accessed or modified in any way, or internal repairs are undertaken. This does not apply to Postal Service-approved user, field, or Postal Service access to a specific internal component or software. To prevent unauthorized use, the manufacturer or any third party acting on its behalf must keep secure any equipment or other component that can be used to open or access the internal, electronic, or secure components of a meter.

Stanley F. Mires,

Chief Counsel, Legislative.

[FR Doc. 03–1156 Filed 1–17–03; 8:45 am]

BILLING CODE 7710–12–P

ENVIRONMENTAL PROTECTION AGENCY

40 CFR Part 300

[FRL–7435–2]

National Oil and Hazardous Substances Pollution Contingency Plan; National Priorities List

AGENCY: Environmental Protection Agency.

ACTION: Notice of partial deletion of the Rocky Mountain Arsenal National Priorities List Site from the National Priorities List.

SUMMARY: The Environmental Protection Agency (EPA) Region 8 announces the deletion of the Western Tier Parcel of the Rocky Mountain Arsenal National Priorities List (RMA/NPL) Site from the National Priorities List (NPL). The NPL constitutes appendix B of 40 CFR part 300, which is the National Oil and Hazardous Substances Pollution Contingency Plan (NCP), which EPA promulgated pursuant to section 105 of the Comprehensive Environmental Response, Compensation, and Liability Act (CERCLA), as amended. EPA and the State of Colorado, through the Colorado Department of Public Health and Environment (CDPHE), have determined that the Western Tier Parcel of the RMA/NPL Site poses no significant threat to public health or the environment and, therefore, no further remedial measures pursuant to CERCLA are appropriate. This partial deletion pertains only to the Western Tier Parcel of the RMA/NPL Site and does not include the other portions of the Site, which will remain on the NPL.

EFFECTIVE DATE: January 21, 2003.

FOR FURTHER INFORMATION CONTACT: Ms. Laura Williams, Remedial Project Manager (8EPR–F), U.S. EPA, Region 8, 999 18th Street, Suite 300, Denver, Colorado 80202–2466, (303) 312–6660. Information on the RMA/NPL Site as well as the Deletion Docket and the Responsiveness Summary for this partial deletion are available at EPA's Region 8 Superfund Records Center in Denver, Colorado. Documents are available for viewing by appointment from 8 a.m. to 4 p.m., Monday through Friday excluding holidays by calling (303) 312–6473. The Administrative Record for the RMA/NPL Site, which includes the Deletion Docket and Responsiveness Summary for the partial deletion of the Western Tier Parcel, is maintained at the Joint Administrative Records Document Facility, Rocky Mountain Arsenal, Building 129, Room 2024, Commerce City, Colorado 80022–1748, (303) 289–0362. Documents are available for viewing from 12 p.m. to 4 p.m., Monday through Friday or by appointment.

SUPPLEMENTARY INFORMATION: The RMA/NPL Site is located approximately ten miles northeast of downtown Denver, Colorado and is comprised of two operable units (OU), the On-Post and Off-Post. The On-Post OU is encompassed by the boundaries of the Rocky Mountain Arsenal proper and occupies 27 square miles. The Off-Post OU addresses contamination north and northwest of the RMA proper boundaries. The Western Tier Parcel consists of 940 acres on the western perimeter of the On-Post OU of the RMA/NPL Site along Quebec Street in Commerce City, Colorado. The NPL partial deletion pertains only to the Western Tier Parcel which is a small portion of the On-Post OU. The Off-Post OU and the rest of the On-Post OU will remain on the NPL.

On October 2, 1998, EPA published a Notice of Intent for Partial Deletion (NOIDp) in the **Federal Register** (63 FR 53005) and local newspapers which proposed to delete the Western Tier Parcel from the RMA/NPL Site. Comments received during the public comment period primarily focused on the potential future placement of a child daycare facility at the Parcel and reiterated previous concerns that RMA, and hence the Western Tier Parcel, might be contaminated with dioxins. Based upon consideration of these concerns, EPA postponed action on the partial deletion until additional soil sampling and analysis of the Western Tier Parcel could be conducted.

The additional soil studies have been completed and, taken together with previous site-wide risk studies, address the community concerns regarding any future child daycare facility and potential dioxin contamination. These studies include the (1) Confirmation Soil Sampling Risk Report (EPA 2002a), (2) Denver Front Range Soil Dioxin Study, which consists of four separate studies including one specific to the Parcel (EPA 2001), (3) Section 9 Borrow Area Report (PMRMA 2000), and (4) Site Reconnaissance Report (EPA 2002b). Additional studies and reports developed include (1) Surface Flux Chamber Testing (CDPHE 1998), (2)

Geophysical Survey on Section 9 (PMRMA 2000), (3) Vapor Pathway Analysis (EPA 1998), (4) Assessment of Residual Ecological Risk Report (PMRMA 2002), and (5) Potential Ordnance/Explosives and Recovered Chemical Warfare Materiel (OE/RCWM) Hazards Report (PMRMA 2002).

EPA proposed the partial deletion of the Western Tier Parcel on September 23, 2002, by publishing a second NOIDp in the **Federal Register** (67 FR 59487). Comments received during the public comment period, which ended November 22, 2002, were primarily focused on how potential contamination or munitions would be addressed if found during development of the Parcel. EPA also received nine letters of support for proceeding with the partial deletion.

In our Responsiveness Summary, EPA explained that the Tri-County Health Department (TCHD) is coordinating with Commerce City, the most likely purchaser of the Parcel, to provide personnel who will be available to brief contractors about the RMA/NPL Site history before any activity begins on the Parcel. As the local regulatory agency overseeing remediation of the RMA/NPL Site, TCHD has direct knowledge of the possible construction hazards associated with RMA lands. If any unusual material, stained soil, unusual objects, or odors are discovered, TCHD may call upon local Emergency Response resources (including Fire, Law Enforcement, and the bomb squad) or Army technicians to assist in identifying the nature of the anomaly.

The nine entities who support the partial deletion cite the thoroughness of investigations conducted by EPA, the U.S. Army, and CDPHE to ensure the Parcel is fully protective of public health and the environment. EPA agrees that the numerous studies conducted for the Parcel demonstrate that the Parcel does not present a threat to the environment or human health and it is appropriate to delete the Western Tier Parcel from the RMA/NPL Site.

EPA identifies sites that appear to present a significant risk to public health, welfare, or the environment and maintains the NPL as the list of those sites. Any site deleted from the NPL remains eligible for Fund-financed actions in the unlikely event that conditions at the site warrant such action. Section 300.425(e)(3) of the NCP states that Fund-financed actions may be taken at sites deleted from the NPL. Deletion of a site from the NPL does not affect responsible party liability or impede Agency efforts to recover costs associated with response efforts.

List of Subjects in 40 CFR Part 300 Lists of Subjects

Environmental protection, Air pollution control, Chemicals, Hazardous substances, Hazardous waste, Intergovernmental relations, Penalties, Reporting and recordkeeping requirements, Superfund, Water pollution control, Water supply.

Dated: January 8, 2003.

Robert E. Roberts,

Regional Administrator, Region 8.

PART 300—[AMENDED]

1. The authority citation for part 300 continues to read as follows:

Authority: 33 U.S.C. 1321(c)(2); 42 U.S.C. 9601–9657; E.O. 12777, 56 FR 54757, 3CFR 1991 Comp., p. 351; E.O. 12580, 52 FR 2923, 3CFR1987 Comp., p. 193.

Appendix B—[Amended]

2. Table 2 of appendix B to part 300 is amended by revising the entry for ''Rocky Mountain Arsenal (USARMY)'' by adding a note ''P'' so that it reads as follows:

Appendix B to Part 300—National Priorities List

TABLE 2.—FEDERAL FACILITIES SECTION

State	Site name	City/County	Notes (a)
*	*	*	*
CO	Rocky Mountain Arsenal (USARMY)	Adams County	P
*	*	*	*

(a) * * *

* * * * * * *

P=Sites with partial deletion(s).

[FR Doc. 03–958 Filed 1–17–03; 8:45 am]

BILLING CODE 6561–07–P

FEDERAL COMMUNICATIONS COMMISSION

47 CFR Part 73

[DA 03–86, MM Docket No. 00–139, RM–9915]

Digital Television Broadcast Service; Little Rock, AR

AGENCY: Federal Communications Commission.

ACTION: Final rule.

SUMMARY: The Commission, at the request of River City Broadcasting, Inc. (formerly Channel 42 of Little Rock, Inc.), substitutes DTV channel 44 for DTV channel 43c. *See* 65 FR 51277, August 23, 2000. DTV channel 44 can be allotted to Little Rock, Arkansas, in compliance with the principle community coverage requirements of Section 73.625(a) at reference coordinates 34–47–56 N. and 92–29–44 W. with a power of 1000, HAAT of 334 meters and with a DTV service population of 866 thousand. With this action, this proceeding is terminated.

DATES: Effective March 3, 2003.

FOR FURTHER INFORMATION CONTACT: Pam Blumenthal, Media Bureau, (202) 418–1600.

SUPPLEMENTARY INFORMATION: This is a synopsis of the Commission's Report and Order, MM Docket No. 00–139, adopted January 13, 2003, and released January 17, 2003. The full text of this document is available for public inspection and copying during regular business hours in the FCC Reference Information Center, Portals II, 445 12th Street, SW., Room CY–A257, Washington, DC. This document may also be purchased from the Commission's duplicating contractor, Qualex International, Portals II, 445 12th Street, SW, CY–B402, Washington, DC, 20554, telephone 202–863–2893, facsimile 202–863–2898, or via e-mail *qualexint@aol.com*.

List of Subjects in 47 CFR Part 73

Digital television broadcasting, Television.

Part 73 of Title 47 of the Code of Federal Regulations is amended as follows:

PART 73—[AMENDED]

1. The authority citation for part 73 continues to read as follows:

Authority : 47 U.S.C. 154, 303, 334 and 336.

§ 73.622 [Amended]

2. Section 73.622(b), the Table of Digital Television Allotments under Arkansas, is amended by removing DTV channel 43c and adding DTV channel 44 at Little Rock.

Federal Communications Commission.

Barbara A. Kreisman,

Chief, Video Division, Media Bureau.

[FR Doc. 03–1198 Filed 1–17–03; 8:45 am]

BILLING CODE 6712–01–U

FEDERAL COMMUNICATIONS COMMISSION

47 CFR Part 73

[DA 03–85, MB Docket No. 02–281, RM–10563]

Digital Television Broadcast Service; Macon, GA

AGENCY: Federal Communications Commission.

ACTION: Final rule.

SUMMARY: The Commission, at the request of Macon Urban Ministries, Inc. d/b/a Good News Television, substitutes DTV channel 45 for DTV channel 50 at Macon, Georgia. *See* 67 FR 61572, October 1, 2002. DTV channel 45 can be allotted to Macon, Georgia, in compliance with the principle community coverage requirements of Section 73.625(a) at reference coordinates 32–45–51 N. and 83–33–32 W. with a power of 1000, HAAT of 223 meters and with a DTV service population of 608 thousand. With this action, this proceeding is terminated.

DATES: Effective March 3, 2003.

FOR FURTHER INFORMATION CONTACT: Pam Blumenthal, Media Bureau, (202) 418–1600.

SUPPLEMENTARY INFORMATION: This is a synopsis of the Commission's Report and Order, MB Docket No. 02–281, adopted January 13, 2003, and released January 17, 2003. The full text of this document is available for public inspection and copying during regular business hours in the FCC Reference Information Center, Portals II, 445 12th Street, S.W., Room CY–A257, Washington, DC. This document may also be purchased from the Commission's duplicating contractor, Qualex International, Portals II, 445 12th Street, SW, CY–B402, Washington, DC, 20554, telephone 202–863–2893, facsimile 202–863–2898, or via e-mail *qualexint@aol.com*.

List of Subjects in 47 CFR Part 73

Digital television broadcasting, Television.

Part 73 of Title 47 of the Code of Federal Regulations is amended as follows:

PART 73—[AMENDED]

1. The authority citation for Part 73 continues to read as follows:

Authority : 47 U.S.C. 154, 303, 334 and 336.

§ 73.622 [Amended]

2. Section 73.622(b), the Table of Digital Television Allotments under Georgia, is amended by removing DTV channel 50 and adding DTV channel 45 at Macon.

Federal Communications Commission.

Barbara A. Kreisman,

Chief, Video Division, Media Bureau.

[FR Doc. 03–1197 Filed 1–17–03; 8:45 am]

BILLING CODE 6712–01–U

FEDERAL COMMUNICATIONS COMMISSION

47 CFR Part 73

[DA 03–79, MB Docket No. 02–129, RM–10437]

Digital Television Broadcast Service; Wilmington, NC

AGENCY: Federal Communications Commission.

ACTION: Final rule.

SUMMARY: The Commission, at the request of Raycom America, Inc., licensee of station WECT(TV), substitutes DTV channel 44 for DTV channel 54 at Wilmington, North Carolina. *See* 67 FR 39933, June 11, 2002. DTV channel 44 can be allotted to Wilmington in compliance with the principle community coverage requirements of Section 73.625(a) at reference coordinates 34–19–16 N. and 78–13–43 W. with a power of 33, HAAT of 290 meters and with a DTV service population of 328 thousand. With this action, this proceeding is terminated.

DATES: Effective March 3, 2003.

FOR FURTHER INFORMATION CONTACT: Pam Blumenthal, Media Bureau, (202) 418–1600.

SUPPLEMENTARY INFORMATION: This is a synopsis of the Commission's Report and Order, MB Docket No. 02–129, adopted January 10, 2003, and released January 16, 2003. The full text of this document is available for public inspection and copying during regular business hours in the FCC Reference Information Center, Portals II, 445 12th Street, SW., Room CY–A257, Washington, DC. This document may also be purchased from the Commission's duplicating contractor, Qualex International, Portals II, 445 12th Street, SW., CY–B402, Washington, DC, 20554, telephone 202–863–2893, facsimile 202–863–2898, or via e-mail *qualexint@aol.com*.

List of Subjects in 47 CFR Part 73

Digital television broadcasting, Television.

Part 73 of Title 47 of the Code of Federal Regulations is amended as follows:

PART 73—[AMENDED]

1. The authority citation for Part 73 continues to read as follows:

Authority: 47 U.S.C. 154, 303, 334 and 336.

§ 73.622 [Amended]

2. Section 73.622(b), the Table of Digital Television Allotments under North Carolina, is amended by removing DTV channel 54 and adding DTV channel 44 at Wilmington.

Federal Communications Commission.

Barbara A. Kreisman,

Chief, Video Division, Media Bureau.

[FR Doc. 03–1196 Filed 1–10–03; 8:45 am]

BILLING CODE 6712–01–U

FEDERAL COMMUNICATIONS COMMISSION

47 CFR Part 73

[DA 02–3419]

Radio Broadcasting Services; Various Locations

AGENCY: Federal Communications Commission.

ACTION: Final rule.

SUMMARY: The Commission, on its own motion, editorially amends the Table of FM Allotments to specify the actual classes of channels allotted to various communities. The changes in channel classifications have been authorized in response to applications filed by licensees and permittees operating on these channels. This action is taken pursuant to *Revision of Section 73.3573(a)(1) of the Commission's Rules Concerning the Lower Classification of an FM Allotment,* 4 FCC Rcd 2413 (1989), and the *Amendment of the Commission's Rules to Permit FM*

Channel and Class Modifications [Upgrades] by Applications, 8 FCC Rcd 4735 (1993).

DATES: Effective January 21, 2003.

FOR FURTHER INFORMATION CONTACT: Kathleen Scheuerle, Media Bureau, (202) 418–2180.

SUPPLEMENTARY INFORMATION: This is a summary of the Commission's Report and Order, adopted December 13, 2002, and released December 16, 2002. The full text of this Commission decision is available for inspection and copying during regular business hours at the FCC Reference Information Center, Portals II, 445 12th Street, SW., Room CY–A257, Washington, DC 20554. This document may also be purchased from the Commission's duplicating contractor, Qualex International, Portals II, 445 12th Street, SW., Room CY–B402, Washington, DC 20554, telephone 202–863–2893, facsimile 202–863–2898, or via e-mail *qualexint@aol.com.*

List of Subjects in 47 CFR Part 73

Radio, Radio broadcasting.

Part 73 of title 47 of the Code of Federal Regulations is amended as follows:

PART 73—RADIO BROADCAST SERVICES

1. The authority citation for part 73 continues to read as follows:

Authority: 47 U.S.C. 154, 303, 334 and 336.

§ 73.202 [Amended]

2. Section 73.202(b), the Table of FM Allotments under Alabama, is amended by removing Channel 279A and adding Channel 279C3 at Andalusia.

3. Section 73.202(b), the Table of FM Allotments under Arizona, is amended by removing Channel 264A and adding Channel 264C1 at Duncan.

4. Section 73.202(b), the Table of FM Allotments under Colorado, is amended by removing Channel 222A and adding Channel 222C1 at Holyoke and by removing Channel 243A and adding Channel 243C1 at Julesburg.

5. Section 73.202(b), the Table of FM Allotments under Florida, is amended by removing Channel 253C and adding Channel 253C0 at Panama City and by removing Channel 254C2 and adding Channel 254C1 at Pensacola.

6. Section 73.202(b), the Table of FM Allotments under Louisiana, is amended by removing Channel 241C and adding Channel 241C1 at Lake Charles.

7. Section 73.202(b), the Table of FM Allotments under Missouri, is amended by removing Channel 223C1 and adding Channel 223C0 at Joplin.

8. Section 73.202(b), the Table of FM Allotments under South Carolina, is amended by removing Channel 244A and adding Channel 244C3 at Cayce and by removing Channel 221C2 and adding Channel 221C1 at Myrtle Beach.

9. Section 73.202(b), the Table of FM Allotments under Texas, is amended by removing Channel 295A and adding Channel 295C3 at Kerens.

Federal Communications Commission.

John A. Karousos,

Assistant Chief, Audio Division, Media Bureau.

[FR Doc. 03–1202 Filed 1–17–03; 8:45 am]

BILLING CODE 6712–01–P

Proposed Rules

Federal Register

Vol. 68, No. 13

Tuesday, January 21, 2003

This section of the FEDERAL REGISTER contains notices to the public of the proposed issuance of rules and regulations. The purpose of these notices is to give interested persons an opportunity to participate in the rule making prior to the adoption of the final rules.

DEPARTMENT OF AGRICULTURE

Animal and Plant Health Inspection Service

9 CFR Ch. I

[Docket No. 01–068–1]

RIN 0579–AB43

Risk Reduction Strategies for Potential BSE Pathways Involving Downer Cattle and Dead Stock of Cattle and Other Species

AGENCY: Animal and Plant Health Inspection Service, USDA.

ACTION: Advance notice of proposed rulemaking.

SUMMARY: We are soliciting public comment to help us develop approaches to control the risk that dead stock and nonambulatory animals could serve as potential pathways for the spread of bovine spongiform encephalopathy, if that disease should ever be introduced into the United States.

DATES: We will consider all comments that we receive on or before March 24, 2003.

ADDRESSES: You may submit comments by postal mail/commercial delivery or by e-mail. If you use postal mail/commercial delivery, please send four copies of your comment (an original and three copies) to: Docket No. 01–068–1, Regulatory Analysis and Development, PPD, APHIS, Station 3C71, 4700 River Road Unit 118, Riverdale, MD 20737–1231. Please state that your comment refers to Docket No. 01–068–1. If you use e-mail, address your comment to *regulations@aphis.usda.gov*. Your comment must be contained in the body of your message; do not send attached files. Please include your name and address in your message and ''Docket No. 01–068–1'' on the subject line.

You may read any comments that we receive on this docket in our reading room. The reading room is located in room 1141 of the USDA South Building, 14th Street and Independence Avenue SW., Washington, DC. Normal reading room hours are 8 a.m. to 4:30 p.m., Monday through Friday, except holidays. To be sure someone is there to help you, please call (202) 690–2817 before coming.

APHIS documents published in the **Federal Register**, and related information, including the names of organizations and individuals who have commented on APHIS dockets, are available on the Internet at *http://www.aphis.usda.gov/ppd/rad/webrepor.html.*

FOR FURTHER INFORMATION CONTACT: Dr. Lisa Ferguson, Emergency Programs, VS, APHIS, 4700 River Road, Unit 41, Riverdale, MD 20737–1237; (301) 734–8073.

SUPPLEMENTARY INFORMATION:

Background

We are soliciting comments to help us develop an approach to control risks associated with disposal of nonambulatory and dead livestock. These animals could serve as potential pathways for the spread of bovine spongiform encephalopathy (BSE), if that disease should ever be introduced into the United States.

It is well established that domestic and wild animals may contract diseases—especially viral and bacterial diseases—from animals that die on the farm and do not receive proper disposal. Direct exposure to improperly buried dead stock [1] and consumption of feed or grass contaminated by run-off that passed over such animals are some of the routes of potential exposure for these diseases.

Bovine spongiform encephalopathy (BSE) is a disease of cattle and is a member of a class called transmissible spongiform encephalopathies (TSE's). Other TSE's also cause various diseases in animals and humans. BSE was first documented in the United Kingdom in 1986 and has since spread to approximately 21 other countries in Europe, and to Israel and Japan. There has never been a case of BSE identified in the United States. However, other types of TSE diseases have affected U.S. livestock and wildlife, including scrapie in sheep and goats and chronic wasting disease (CWD) in both captive and free-ranging elk and deer.

In many ways, TSE diseases present a more difficult problem than other animal diseases with regard to controlling the spread of disease through dead stock. This is due to the nature of TSE diseases, the general lack of live-animal tests for them, and the extreme hardiness of TSE agents. These issues are discussed in some detail below.

Surveillance programs in European countries where BSE exist have found that BSE is present in a higher percentage of nonambulatory and dead livestock than in the general cattle populations. An animal at the point of death from BSE is also generally in its most infectious state, with a high concentration of the BSE agent in certain tissues. Studies by the U.S. Department of Agriculture (USDA), independent researchers, and the Harvard Center for Risk Analysis (discussed below) concur that if BSE were introduced into the United States, dead stock that were rendered and allowed into the animal feed chain would pose a risk of spreading the disease. In January 2001, the Food and Agriculture Organization of the United Nations issued a press release urging countries to take steps to reduce BSE risks; one of the recommended practices was correct disposal of dead stock. Diseases other than BSE are also an issue in the disposal of dead stock.

The BSE agent is remarkably hardy and resistant to destruction by standard cooking practices, sterilization procedures, and rendering processes. Generally, the rendering processes used in the United States will reduce the infectivity of a TSE agent in the rendered material by a factor of 1 to 3 logs.[2] The continuous rendering processes most widely used in the United States reduce infectivity by 2 logs or less; batch processing, used for less than 5 percent of rendered animals, can reduce infectivity by 3 logs. Since some BSE agent survives rendering, if BSE were to be present in a rendered product that is used in cattle feed (in deliberate or accidental violation of the feed ban imposed by the U.S. Food and Drug Administration (FDA)) it could lead to the amplification and spread of

[1] Dead stock are livestock that die or are killed before being sent to slaughter; they are sometimes referred to as ''on-farm deads.'' When used in this notice in reference to cattle, this term refers to adult cattle over 24 months of age, since cattle that die at a younger age present a greatly reduced likelihood of harboring BSE infectivity.

[2] A 1-log reduction is reduction by a factor of 10, 2 logs = 100, 3 logs = 1000, etc.

BSE among cattle consuming that feed. There is also a possibility that animal feed containing a TSE agent from the rendered protein of one species (*e.g.*, scrapie in sheep) could cause development of disease in animals of another species consuming that feed (*e.g.*, cause BSE in cattle). This is, in fact, the leading theory for how BSE originated in the United Kingdom.

Given this situation, the Animal and Plant Health Inspection Service (APHIS) wants to take steps to limit the potential pathways through which BSE could spread in U.S. animal populations, in case it is introduced despite efforts to keep it out of the United States.

TSE Disease Surveillance

Data from APHIS animal disease surveillance programs can be used to detect occurrences of disease, provide information for better policy decisions, and better understand the diseases. Most surveillance programs are based on data from live-animal tests; however, since such tests are generally unavailable for TSE's, in this area APHIS generally relies on observation of animals exhibiting signs of TSE's and tissue samples from dead animals. Since 1990, animals targeted for BSE surveillance by APHIS include cattle exhibiting signs of neurological disease in the field (*i.e.*, prior to being brought to slaughter), cattle condemned at slaughter for neurologic reasons, rabies-negative cattle submitted to public health laboratories,[3] neurologic cases submitted to veterinary diagnostic laboratories and teaching hospitals, nonambulatory cattle (''downer cattle'') over 24 months of age at slaughter, and adult cattle dying from unknown causes on farms. The primary reason we target downer animals is that surveillance data from European countries in which BSE has been detected indicate that downer cattle have a greater incidence of BSE.[4] If BSE enters the United States, downer cattle testing programs are likely to first reveal it.

APHIS' current approach to BSE surveillance takes into account regional differences in the movement of animals, *i.e.*, surveillance is scaled to take into account where most cattle are raised and where they are slaughtered. On this basis the United States is divided into eight regions[5] for BSE surveillance. For years, APHIS has calculated regional surveillance goals for BSE to exceed international standards recommended by the Office International des Epizooties, the world organization for animal health. APHIS continues to increase postmortem testing for BSE, with more than 19,990 cattle samples tested in fiscal year 2002'up from 5,200 during fiscal year 2001. Overall, our surveillance program targets the segment of the cattle population where BSE would most likely be found if it were to occur, *i.e.*, downer animals and dead stock.

Limiting Possible Pathways for Spread of BSE

By their nature, downer animals and dead stock include many animals dead or dying from communicable diseases. They therefore represent a significant pathway for spread of disease if they are not handled or disposed of with appropriate safeguards. Over time, USDA and industry have developed methods to mitigate, if imperfectly, the risks presented by dead stock and downer animals affected by the older, better-known animal diseases.

With regard to limiting the potential pathways through which BSE could spread in U.S. animal populations if it were introduced, we believe that dead stock and downer animals represent the most significant potential pathway that has not been addressed in previous efforts to reduce BSE risks. The remainder of this advance notice of proposed rulemaking discusses why we think this is so and identifies topic areas where we are seeking more information in order to develop rulemaking on the subject of dead stock.

The Harvard Risk Analysis

In April 1998, in order to better characterize the potential for BSE to be introduced and spread in the United States, and the potential threat to human health should this happen, USDA commissioned the Harvard Center for Risk Analysis to conduct a risk analysis (referred to below as the Harvard study). The Harvard study was completed and released on November 30, 2001.[6] The summary of the Harvard study stated its findings that the United States is highly resistant to any introduction of BSE or a similar disease. It also found that BSE is extremely unlikely to become established in the United States, and if introduced, it is likely to be quickly eliminated following its introduction.

The Harvard study investigated potential pathways by which BSE or other TSE's could enter U.S. cattle populations, using a quantitative simulation model to characterize how the introduction of BSE would spread over time, and the extent to which it could result in human exposure to contaminated food products. The study's model quantified some aspects of BSE's potential progress if introduced into the United States—*e.g.*, the number of animals that would be infected over time, and the resulting quantity of the BSE agent in food that would potentially be available for human consumption—but it did not quantify the probability that BSE will be introduced, nor did it estimate how many people would contract vCJD if BSE were introduced. The study omitted quantitative treatment of both of these issues because the available information is inadequate.

The Harvard study has helped APHIS identify those risk management control options that most influence the introduction and spread of disease, and to identify those sources of uncertainty that have the greatest impact on our programs to control BSE risks. This information can be used to help identify the most important control measures and to prioritize data collection and research efforts.

The Harvard study finds that the United States is highly resistant to the introduction of BSE. In addition, should BSE occur in this country, measures taken by government and industry make

[3] We test rabies-negative cattle because these animals often have clinical signs that could be consistent with BSE. If the public health tests show the animal does not have rabies, the samples may be forwarded to APHIS for BSE testing.

[4] For instance, surveillance in Germany in 2001 showed that animals subjected to normal slaughter had a BSE incidence of 0.002 percent, while fallen animals (in the United States, these would be called dead stock, or animals not presented for slaughter for human consumption) had an incidence of 0.02 percent, and emergency slaughters (in the United States, animals presented for slaughter for human consumption and found to show signs of neurological illness) had an incidence of 0.48 percent. ''Final Report of a Mission Carried Out in Germany from 28/05/2001 to 01/06/2001 in Order to Evaluate the Implementation of Protective Measures Against Bovine Spongiform Encephalopathy,'' available at *http://europa.eu.int/comm/food/fs/inspections/vi/reports/germany/vi_rep_germ_3302–2001_en.pdf*.

[5] These divisions were established essentially for epidemiological surveillance reasons and are not intended for the purposes of Chapter 1.3.4 of the International Animal Health Code, *i.e.*, ''defining geographical areas of different animal health status within its territory for the purpose of international trade.'' The regions were established because State-by-State reporting did not provide very useful data, and caused underestimation and overestimation of States' cattle populations, due to the common practice of moving cattle interstate for feeding and slaughter. Often an animal actually comes from one state (*e.g.*, New Jersey) but is slaughtered in another state (*e.g.*, Pennsylvania), so therefore slaughter surveillance on a State-by-State basis would report the animal as originating from Pennsylvania. To make our estimations and calculations as scientifically sound as possible, we changed to a regional system, with States grouped into regions based on typical animal populations and their movement to regional slaughterhouses.

[6] Evaluation of the Potential for Bovine Spongiform Encephalopathy in the United States; Harvard University and Tuskegee University, November 26, 2001. Available at http://www.aphis.usda.gov/oa/bse/.

the United States robust against the spread of BSE to animals or humans.

The report identified three pathways or practices that could contribute most either to increased human exposure to the BSE agent or to the spread of BSE if it should be introduced into the United States. The three pathways are:

- Noncompliance with the FDA feed ban, including misfeeding on the farm and the mislabeling of prohibited feed and feed products;
- Inclusion of high risk material, such as brain and spinal cord, in edible products;
- Rendering of animals that die on the farm and use (through illegal diversion or cross-contamination) of the rendered product in ruminant feed.

FDA and FSIS are taking action to address the first two pathways. FDA is enhancing its enforcement of the feed ban and is evaluating whether further rulemaking is needed. FSIS published a notice in the **Federal Register** on January 17, 2002 (67 FR 2399, Docket No. 01–027N) announcing the availability of a BSE Current Thinking Paper that discusses measures that it is considering implementing to minimize human exposure to bovine materials that could potentially contain the BSE agent. Measures under consideration by FSIS include prohibiting certain high risk materials, such as brain and spinal cord, from specified cattle for use as human food and prohibiting the incorporation of CNS tissue in boneless beef products, including meat from advance meat recovery (AMR) systems. Commenters on this advance notice of proposed rulemaking may wish to explore whether there are cross-cutting issues between safe disposal of these specified risk materials and safe disposal options for downer and on-farm dead animals.

Because APHIS has primary authority [7] for animal disease risks posed by both live and dead animals on the farm, including matters where carcass disposal may pose animal health risks, APHIS is publishing this advance notice of proposed rulemaking to open discussion concerning the third pathway, rendered material from animals that die on the farm and its possible inclusion in ruminant feed. We are publishing this notice to fulfill the Secretary's statement, upon release of the Harvard study, that ''USDA will publish an advance notice of proposed rulemaking to consider disposal options for dead and downer animals, because such cattle are considered an important potential pathway for the spread of BSE in the animal chain.''

The Harvard study considers dead stock to be an especially significant potential pathway for BSE. The base case for the Harvard study's model examined what would happen if 10 animals infected with BSE were imported into the United States, assuming current Government regulations and controls are in place. In this scenario, it could be likely that one or more of these animals will succumb to the disease on the farm, or become sick enough to be killed rather than sent to slaughter. The worst possible outcome at this point in the scenario would be for an animal with BSE to be rendered, and for the rendered product to be mixed into ruminant feed (in violation of the FDA feed ban). Rendering an animal that has reached the clinical stage of BSE introduces the maximum amount of infectivity into rendering and potentially into feed. This could result in many more cattle contracting BSE through consuming that contaminated feed, or consuming feed that was cross-contaminated during production or storage, if the feed ban was violated.

The Harvard study's model estimates that keeping this from occurring, by prohibiting the rendering of animals that die on the farm or by ensuring that no rendered product from such animals is ever mixed with ruminant feed, would greatly reduce the potential for contamination in the animal feed chain and reduce the average predicted new cases of BSE following introduction of 10 infected cattle from 2.9 new cases to 0.68 new cases. The Harvard study found that safely disposing of on-farm dead livestock is predicted to greatly reduce BSE spread due to the high levels of BSE agent expected in animals that die from BSE on the farm. It is important to keep such animals from directly entering animal feed chains (*e.g.*, through using rendered products derived from them in feed), and it is important to dispose of their carcasses in ways that keep other livestock and wildlife from contacting them.

Note that the Harvard study by design considered risk factors for BSE one at a time, not in combination. In other words, the prediction that keeping rendered dead stock out of ruminant feed would lower new cases of BSE following introduction of 10 infected cattle from 2.9 to 0.68 new cases does not take into account the marginal and cumulative effects of other BSE risk reduction activities. Other actions by Federal agencies and industry—*e.g.*, more effective enforcement of the feed ban and import restrictions applied to countries with BSE—will also be acting to mitigate BSE risks, to a cumulative degree not calculated by the Harvard study.

The Harvard study suggests prohibiting rendering of dead stock as one way to mitigate this risk, but it does not go on to evaluate the associated negative effects such a policy could have on preventing the spread of BSE and other diseases. Eliminating rendering as a disposal option for dead stock would mean owners would have to find other disposal options, many of which pose their own risks of spreading disease. These risks are discussed later in this document.

Issues in Disposal of Downer Cattle and Dead Stock

Downer Cattle

Downer cattle—animals that cannot rise from a recumbent position due to injury or illness—may be sent for slaughter at plants inspected by FSIS.[8] Sometimes the FSIS antemortem inspection reveals that the downer animal clearly is affected by a particular disease, but more often diseases are revealed only when characteristic lesions (*e.g.*, of tuberculosis, swine erysipelas, or infectious anemia) are seen within the carcass after slaughter. However, TSE diseases do not cause grossly observable lesions, so FSIS inspectors instead observe the live downer animals for signs of a CNS disorder. FSIS has the lead role in ensuring that downer cattle presented for slaughter that exhibit clinical signs of BSE are diverted from slaughter. Cattle with clinical signs of a CNS disorder and cattle that died otherwise than by slaughter are already prohibited from use as human food. All downer cattle presented for slaughter are

[7] Generally, APHIS does not directly regulate businesses engaged in animal disposal through rendering, incineration, burial, or other methods. However, such businesses could be affected if APHIS regulates how the owners of animals may move or dispose of dead stock; *e.g.*, disposal businesses could choose to alter their practices to provide the types of disposal APHIS requires the owners of animals to employ. See the Animal Health Protection Act of 2002 (Subtitle E of the Farm Security and Rural Investment Act of 2002, Pub. L. 107–171). Section 10406 states that the Secretary of Agriculture may prohibit or restrict ''the movement in interstate commerce of any animal, article, or means of conveyance if the Secretary determines that the prohibition or restriction is necessary to prevent the introduction or dissemination of any pest or disease of livestock.'' Section 10409 states that the Secretary ''may carry out operations and measures to detect, control, or eradicate any pest or disease of livestock * * * including animals at a slaughterhouse, stockyard, or other point of concentration.''

[8] Any FSIS-inspected facility may slaughter downer cattle if the animal passes ante mortem inspection. Although some slaughter facilities will not accept downers for slaughter, FSIS does not restrict or approve where downers may be slaughtered.

automatically suspected of being affected with a disease or condition that may require condemnation of the animal, in whole or in part, and are identified as ''U.S. Suspects.'' Such cattle must be examined by an FSIS veterinarian, and a record of the veterinarian's clinical findings must accompany the carcass to postmortem inspection if the animal is not condemned. Post mortem inspection on the carcasses of all cattle classified as ''US Suspects,'' including downer cattle, must be performed by a veterinarian rather than a food inspector, and the results of this inspection must be recorded as well.

Downer cattle presented for slaughter that pass antemortem inspection may be slaughtered and, if passed on postmortem inspection, the meat and meat products from such cattle can be used for human food. However, surveillance for BSE in Europe has shown that downer cattle infected with BSE often cannot be found by looking for the typical clinical signs associated with BSE, because the signs of BSE often cannot be differentiated from the signs of the many other diseases and conditions affecting downer cattle. Thus, if BSE were present in the United States, downer cattle infected with BSE could potentially be offered for slaughter and, if the clinical signs of the disease were not detected, pass antemortem inspection. These cattle could then be slaughtered for human or animal food. Although the muscle tissue from BSE-infected downer cattle has not been found to contain the BSE agent, other tissues could contain the BSE agent and the muscle tissue could be cross-contaminated during slaughter and processing.

As noted above, FSIS is considering placing restrictions on specified risk materials from certain categories of slaughtered cattle, including downer cattle, to address this scenario. We are seeking suggestions on actions APHIS could take to prevent downer animals potentially affected by BSE (should it be introduced) from spreading the disease; *i.e.*, actions that could be taken on the farm or at other stages prior to slaughter. We are looking for actions we could take now, rather than actions to be taken if and when BSE is ever introduced. Commenters may wish to describe how risk factors should be considered when sending downer cattle to slaughter, *e.g.*, age, physical condition, source and type of cattle, etc.

Commenters should bear in mind that we currently rely on collecting samples from downer animals, at slaughter and other locations, as a key part of BSE surveillance. We would like commenters to address how APHIS could continue to obtain samples for testing from downer cattle, since such cattle are an important part of our surveillance program for BSE.

Dead Stock

In addition to comments regarding downer animals, we seek comments regarding dead stock. Disposal methods for dead stock is the most important issue addressed by this advance notice of proposed rulemaking. Dead stock are a potential source of infection for many animal diseases, including BSE. Past experience with disease outbreaks in livestock has demonstrated the need for carcass disposal methods that are cost-effective, safe, fast, complete, and environmentally acceptable.

If an animal dies on the farm, or becomes so sick or injured that it must be destroyed on the farm, it immediately loses most or all of its economic value. It is prohibited from being sold for human food. It might be sold to be rendered, or to be processed as pet food, but in most cases the fee for picking up and transporting a dead animal exceeds the salvage value (*i.e.*, the payment for its value as rendered product or pet food). Thus, producers have a strong business reason for finding ways to dispose of dead stock as cheaply as possible.

This incentive to find cheap means of disposal for dead stock is directly in conflict with certain public interest needs. We will note, but not directly address in this advance notice of proposed rulemaking, that dead stock disposal can have significant impacts on environmental quality and on the capacity of existing solid waste management disposal systems (landfills, incinerators, etc.). We are also aware that there are varying costs associated with different methods of dead stock disposal, but we have not analyzed these costs because we have insufficient data, and we request commenters to submit data on these costs. The focus of this advance notice of proposed rulemaking is on how dead stock disposal relates to the public interest in controlling animal disease risks.

Many animal health programs depend on collecting good data about how livestock become sick and die. This data collection would obviously become even more important if BSE were introduced into the United States. When dead stock is treated as an economic burden and disposed of as cheaply as possible, this data collection suffers. The cheapest methods for dead stock disposal include ignoring the carcass (possible in some cattle range situations) or burying it on-site. Both of these means are legal in some States, and in other States that have specific disposal requirements, the requirements are often loosely enforced. Some producers have disposed of dead stock creatively and illegally by abandoning it on public or private land in ravines, rivers, culverts, dumpsters, and other locations. In all of these situations, information about the animal and its possible cause of death is unlikely to make its way to State or Federal animal health authorities.

In addition to making it harder to collect animal health data, inappropriate disposal of dead stock increases the possibility that humans, livestock, or wildlife will come into contact with pathogens associated with the dead stock. Human and animal health concerns, along with environmental quality concerns, are the major reasons existing State laws on carcass disposal were enacted.

While State laws regarding dead stock disposal vary widely, most have the following features in common. They establish a time limit within which disposal must take place—usually 24 or 48 hours after death. They limit disposal methods to those authorized by law, and sometimes rank the methods in the order the State prefers they be used. Typically, this is the preferred order:

Rendering at a licensed and approved rendering facility. This method maximizes the government's ability to monitor and regulate dead stock disposal, by working with relatively few companies that pick up and render the dead stock. However, as discussed below, dead stock pickup by renderers has become less available in many areas and has become more expensive. (In the past renderers would pick up dead cattle for free, or pay the producer for the dead animals; now there is typically a fee of $20 or more for this service, when it is available at all.) There are also TSE risk issues associated with rendering, and with the renderers' ability to segregate higher-risk materials and divert them to products that are not for use in humans or animals.

However, the existence of markets for use of rendered products for industrial purposes that present no risk of contact with animal or human products does provide a possible avenue for disposal of rendered products from animals that may be infected with a TSE. Such products may be diverted into production of paints, adhesives, or other products. Rendered fat products and meat and bone meal (MBM) may also be used as either a primary fuel or a fuel supplement for heat and power production (especially co-combustion in coal-fired plants), or as an ingredient in cement (MBM is currently used in

cement production in Belgium, France, Germany, Japan, and possibly other countries.) Naturally, diversion of large quantities of rendered products into new uses raises significant economic issues, and many diversion uses may not currently make sense in purely economic terms, as other nations that practice such diversion have found.[9] For example, MBM, when burned, generates only about half the energy obtained from burning coal, yet MBM sells for about 12 times the price of coal.

Although many industrial products are produced mainly from rendered fats and oils, rather than rendered protein, some products utilize rendered protein. In other cases, a percentage of rendered protein can be included as a harmless additive with the rendered fat or oil product. If such diversion into non-food uses is effectively accomplished, it could provide a safe means of dead stock disposal for animals that might spread TSE's if disposed of in other ways.

Composting of dead stock in a properly designed and sized dead animal composter. Composting of dead stock allows the end product to be recycled back to the land as a fertilizer. Poultry and swine industries use this technology effectively. Composting is used to dispose of some cattle and other large species, but large-scale cost-effective approaches are still under development. Composting requires careful planning and monitoring to be successful. Issues include moisture and temperature control and proper admixture of plant matter (often straw or old feedstuffs) to raise the carbon-nitrogen level to a point where proper composting can occur. Composting also takes time; decomposition of a mature cattle carcass takes about 6 to 8 months. The remaining bony matter is soft and easily broken for land application or other final disposal. One successful composting approach uses a three-bin system, which is best located downwind from nearby residences and away from waterways and ponds. Permanent composting facilities have significant start-up costs of $5,000 or more. Composting operations must also take steps to control the potential risk of disease spread by wild and feral animals.

Composting is problematic with regard to BSE infectivity; it may be effective, or it may reduce but not destroy infectivity. Composting does not usually raise material temperatures over 160 °F, a temperature the BSE agent is known to survive for long periods. Further research is needed to characterize the effectiveness of composting with regard to BSE. The United Kingdom's Department for Environment, Food, and Rural Affairs is currently preparing a risk assessment, to be completed in the near future, that may help resolve this question.

Dead stock disposal in an approved sanitary landfill. Most municipal landfills are permitted to accept dead animals but may limit their numbers. To minimize pathogen contamination of groundwater, modern sanitary landfills are designed and operated to prevent leaching into groundwater or surface waters. Drawbacks include limited capacity and expense—many landfills charge over $100 a head to dispose of cattle. However, properly operated landfills will keep infectious material away from livestock.

Incinerating dead stock. Incineration is very effective but is costly and energy intensive, and it may pollute the environment if the incinerator is not operated and maintained properly. Incinerators generally must be licensed by a State government. Open burning of dead animals is not allowed in most States without a permit.

A subset of incineration technology that is gaining popularity is on-site disposal using either complete mobile incinerators or air curtain trench burners. There are cost and air quality issues associated with both of these technologies, and they are usually considered most suitable for short-term disposal projects (such as depopulating a herd) rather than long-term use. However, air curtain trench burners in particular have been gaining use in recent years for on-site disposal of diseased animals. They have been used in Great Britain for disposal of animals during the recent foot-and-mouth disease outbreak, and they have been used in Montana and Colorado to dispose of elk implicated in CWD outbreaks. When properly used, this technology produces ash that presents no disease risk when disposed of properly.

Air curtain trench burners are essentially giant blowers that direct powerful airstreams onto trenches in which carcasses are burned on firewood fuel. This superheats the fire to temperatures steadily above 1,000 °C., resulting in total carcass incineration in approximately 20 minutes. (Cadaver incineration times will vary with factors such as fat content, moisture content, firebox or pit temperature, type of wood waste used, etc.) Site selection is important for air curtain trench burners, and soil type, underground water table, and prevailing wind direction should be carefully considered. High water table areas and sandy soil types should be avoided. Stable vertical trench walls with minimum entry of underground water into the burn area are needed for steady high incineration temperatures.

Burial on premises. Many States specify requirements for owners who bury their dead stock on their own premises. Typically, State laws limit the number of animals that may be buried, require adequate topsoil covering the animals (usually 2 or 3 feet), and attempt to restrict burials in areas where runoff passing over the animals would contaminate groundwater or aquifers.

Tissue digestion. Because this is a new and relatively expensive technology, most State laws do not yet recognize or recommend it as a means of dead stock disposal. Tissue digesters are essentially large ''pressure cooker'' devices that use boiling sodium hydroxide solutions to degrade proteins and fats and result in a sterile liquid suitable for municipal sewage systems, and a sterile, crumbling calcium phosphate residue from the bones and teeth of the animals. Research has shown this method to very effectively reduce levels of TSE infectivity. A typical digester costs several hundred thousand dollars, could process several cattle cadavers simultaneously, and takes several hours to complete a processing cycle. Currently, most digesters in the United States are located at major veterinary research centers or veterinary teaching hospitals.

Preferred Methods for Dead Stock Disposal

APHIS is seeking comments on which approaches for safe disposal of dead stock should be encouraged or required. The primary issue we would like commenters to address is how to develop a combination of regulatory requirements, incentives, and cooperative relationships with production and disposal industries that

[9] ''In Germany all fallen animals and all animals unfit for human consumption must be disposed of at rendering plants. The renderers collect the animals. All fallen and sick bovines over 24 months are BSE tested * * * If the results of the test have not come through then the whole carcass must be processed into MBM under the standard procedure at 133°C and 3 bar. Since the introduction of the MBM feed ban all MBM must be burnt either in waste incinerators, power stations, or as fuel for cement producers * * * Since the introduction of the MBM feed ban rendering operations run at a loss. Federal and Land Governments are still discussing the coverage of the extra costs brought about by the BSE crisis. The Federal Government has so far resisted the wish of the Land Governments that the Federal Government should pay all BSE follow-up costs including the disposal costs of MBM.''—British Embassy Bonn Office Agriculture Note: September 2001, available at *http://www.britischebotschaft.de/en/embassy/agriculture/Agni-Note-Fallen%20Stock.htm.*

will result in sustainable procedures for the safe disposal of dead stock.

Commenters are also asked to consider the costs associated with any such solutions, and any trade-offs that might result by requiring particularly stringent disposal methods to protect against BSE, when easier disposal methods might be adequate protection against other animal diseases. Such comments could also address whether moving to a disposal system designed with BSE in mind might reduce the availability of other types of disposal services which might be needed in situations where it is necessary to dispose of large quantities of carcasses that do not present a BSE risk (*e.g.,* an FMD or pseudorabies outbreak).

Commenters should bear in mind that our current BSE surveillance includes collecting samples from cattle that die on-farm. We would like commenters to address how APHIS could continue to obtain and increase our samples for testing from dead stock.

When dead stock are disposed of unsafely, it is because safe disposal is unavailable, expensive, or inconvenient. One approach to dead stock disposal could be to require certain methods of disposal (*e.g.*, incineration, landfill burial, digestion, or composting, at licensed facilities) under Federal or State laws. But requiring certain disposal methods does not automatically make them available, inexpensive, or convenient. Also, some disposal methods have been very useful for disposing of small numbers of animal carcasses, but their use for the disposal of large numbers of carcasses may result in an increased disease risk to other livestock producers in an area. The short term savings from these methods can easily result in an increased cost later on, which could have been reduced or eliminated if the right techniques had been used initially.

As discussed above, different disposal methods result in different levels and types of risk that cattle could contract BSE from a disposed animal. There are very effective and usually expensive disposal methods that reliably inactivate any infectious agent, including BSE, in a destroyed cadaver. These methods include incineration (on-farm or at a remote incinerator) and tissue digestion. Other disposal methods are known to be partially effective in deactivating the BSE agent, thus reducing but not eliminating risk. These methods include rendering (known to reduce BSE infectivity, with the extent of reduction related to the process used) and composting (apparently reduces infectivity, but to what degree is not well characterized). In both of these methods, an important element may be diversion of the end-product to uses that will not bring it into contact with animal feed. Other methods such as open burning, burial, and landfill disposal have great variations in their effectiveness due to the great variations in how they are implemented at different times and places.

An important aspect of disposal methods is that they can achieve the desired end either by deactivating the BSE agent or by isolating it. The BSE agent in dead stock need not be inactivated if it is reliably kept from contact with animals that it might infect. Another aspect to consider regarding disposal methods is the extent to which they create further disposal problems downstream. Incineration reduces animals to a small volume of ash, but the ash must be spread somewhere. Tissue digesters produce innocuous liquid waste and some calcium phosphate. Burial and landfill disposal do not immediately reduce the volume of the animal and create enduring concerns about scavengers and leaching into the water table. Rendering greatly reduces the volume of the processed product by removing water content and places the end-product in containers, but it has labeling and use concerns because the product may still be infectious.

We are seeking comments to help us balance these considerations in developing good dead stock disposal practices. We have better information on the issues associated with rendering, compared to other disposal methods, because rendering businesses are few in number and uniform in operation compared to the great variety of businesses operating landfills, incinerators, and composting services. While the following discussion directly addresses some issues associated with rendering, we hope commenters will help us develop similar data regarding other disposal methods.

Here are some of the questions regarding whether rendering is a useful disposal method for dead stock that could harbor TSE's: Since rendering does not completely destroy TSE agents, can we be sure rendered products from possibly-infected dead stock would all be used in ways that would not spread TSE's? Given the capacity and distribution of rendering plants, is rendering of dead stock a viable option nationwide, or are there areas where it is practically unavailable? If rendering is a desirable disposal method, what sorts of requirements, partnerships, or incentives could increase its use?

There are approximately 100 million cattle in the United States, including beef, dairy, and other categories. Over a million post-weaning calves and adult cattle die or are killed each year before being sent to slaughter. The National Renderers Association estimates that about 44 percent of these carcasses were sent for rendering last year but notes that this percentage is declining, as the profitability of rendering dead stock declines. North American renderers process more than 50 billion pounds of animal and poultry material each year, including dead stock, offal, and waste from slaughter and packing plants, and animal waste from food processing, supermarket, and restaurant industries. Rendering reduces the volume of this material by 64 percent, mostly by reducing the water content, which makes the resultant products much easier to package and transport—whether for sale, or for disposal. The value of rendered products in the United States in 1998 was approximately $3.2 billion, and consisted of 9 billion pounds of protein concentrate (largely meat and bone meal, or MBM) and 9 billion pounds of animal fat such as tallow.

Historically, the bulk of rendered products has been used by the feed industry, which adds MBM and high-energy fats to feed mixes for cattle, swine, poultry, and pets. MBM is an attractive feed supplement because it is high in protein, calcium, and phosphorus. The chief supplements that compete with MBM are soybean meal and corn gluten meal. Neither of these plant-based supplements has significant levels of calcium or phosphorus, although corn gluten meal has a higher crude protein content than MBM (60 percent compared to 50 percent). Wholesale prices for MBM and soybean meal have traditionally tracked each other closely, but with MBM commanding a slight premium presumably due to its better mineral content. From January 1988 through February 1996, ruminant MBM sold for an average of $16.05 per ton above the price of soybean meal, but since March 1996, the average price of ruminant MBM has been $1.20 below the price of soybean meal. This price reduction probably results largely from the FDA feed ban, although greater production of soy and corn may also be a factor.

Steady decreases in the price brought by MBM, coupled with increases in transportation and processing costs, act to reduce renderers' traditional role as the primary means for producers to dispose of dead stock. In the past, renderers paid farmers for their dead stock, but recovered that cost by selling the byproducts at a profit. Farmers got rid of their dead animals without cost or

difficulty. Now, however, the rendered product derived from a dead stock cow is worth perhaps $20; to cover collection and processing costs and profit, renderers charge the owner a pickup fee of from $15 to $35 for each animal. This causes producers to seek cheaper means of disposal. It has also caused some renderers to stop offering dead stock pickup when they do not find it cost effective; renderer pickup is very difficult to arrange in Ohio and Michigan, among other places.

We have not yet been able to obtain accurate national figures to indicate the fall-off in renderer pickup of dead stock, but we do have illustrative data from one State, California. The California Department of Food and Agriculture recently required renderers to submit annual reports on how much of their raw material came from dead stock. These reports show that between fiscal years 1999–2000 and 2000–2001, the number of dead stock (poultry excluded) that was collected by renderers declined by 20 percent—from 686,434 head to 553,974 head.

To help commenters focus their comments on the role of rendering in dead stock disposal, we are providing certain basic information about how rendering industries are regulated, their business situation, and certain rendering industry initiatives relevant to dead stock disposal. Persons interested in obtaining more information on rendering industries may wish to visit the National Renderers Association website at *http://www.renderers.org*.

Renderers generally must be licensed by each State in which they do business. Licensing and operating requirements for renderers vary from State to State. With regard to Federal regulations, renderers, like any business, must comply with numerous regulations regarding employment, worker safety, environmental quality, and so on. Renderers of livestock species subject to the FMIA are required to register their businesses with the FSIS, in accordance with 21 U.S.C. 643 and 9 CFR 320.5. (Renderers who do business solely at official slaughter, packing, or other establishments inspected by FSIS are exempt from this registration requirement.) Renderers are also subject to FDA regulations at 21 CFR 589.2000—the ''feed ban'' regulations—that impose requirements on renderers that produce products for use in animal feed. The FDA regulations include requirements for labeling, recordkeeping, separation of raw materials based on species type, and related matters to ensure mammalian protein (with certain exceptions) does not go into ruminant feed.

The rendering industry and individual renderers have taken several actions affecting dead stock disposal and TSE issues. Starting in 1991, most renderers elected not to pick up dead sheep, due to the possible scrapie/BSE link, as a means of keeping sheep dead stock protein out of ruminant feed. That industry-elected action became irrelevant in 1997 with the FDA ruminant feed ban, but dead sheep pickup is still not happening because: (1) Many contracts from product end-users specify that no adult ovine protein is allowed in the product, and (2) the same economic conditions that make it marginal for renderers to pick up any dead stock (cattle, swine, etc.) make it a low priority for renderers to resume picking up sheep. However, renderers have stated that they could reinstitute sheep pickup if it becomes economically viable to do so.

Rendering industry representatives cooperated with FDA in developing the feed ban regulations and have monitored compliance with the ban within the rendering industry. Beginning in April 2001, the Animal Protein Producers Industry (the biosecurity arm of the rendering industry) started an inspection audit of all animal protein producers to ascertain compliance with the FDA feed ban. This was a third-party audit performed by an independent auditing firm, Cook & Thurber of Madison, WI.

Currently, a major concern of renderers is identifying markets for MBM and other rendered protein products that contain ruminant protein. Year 2000 production of MBM was nearly 6.7 billion pounds, of which 5 billion pounds, or 75 percent, contained ruminant protein. All of the ruminant protein MBM production has been diverted from use in ruminant feed, with most going to swine, poultry, and pet feed. Export markets for MBM have also increased more than four-fold in the past 10 years, to 979 million pounds in the year 2000. However, oversupply of MBM compared to the demand for its allowed uses continues to drive MBM prices down. The industry believes it would be physically possible for independent rendering plants to install separate processing lines that would allow them to reduce the amount of MBM containing ruminant protein, and increase the amount of ruminant-free MBM, by roughly 1.5 billion pounds a year. However, the capital expenditure and operating costs to do this would mean that renderers would lose money with each year additional separate processing lines are operated, given prevailing prices for MBM.

Renderers continue to seek new, non-feed markets for their rendered product. However, the market opportunities seem to be much greater for rendered fat and oil product lines than for rendered protein product lines. For example, there is a growing market for biodiesel fuels that can be produced from animal (as well as plant) fats and oils. The USDA's Foreign Agricultural Service has reported that, to address MBM disposal in Europe, ''New uses are being pursued, such as burning MBM in power plants to produce electricity or burning it in kilns to produce construction materials such as cement.''[10]

We are interested in receiving comments that discuss whether rendering can be an effective means for safely disposing of dead stock in a manner that minimizes risks of spreading BSE and other animal diseases. We hope that commenters will address the full range of technical, economic, regional, environmental, and practical business issues associated with this question. At this time, APHIS believes that the key issues associated with using rendering as a safe means of disposal for dead stock are:

- Should dead stock ruminants be segregated at rendering from material being rendered for animal feed use?
- If so, can the rendering industry successfully implement this degree of raw material and product segregation and labeling? What would the cost implications be?
- If the cost of rendering dead stock exceeds the value of the rendered product, who should pay the excess cost? The producer, State or local government, Federal Government, or someone else?
- What could be done through cooperation between industry and government to decrease the cost of picking up dead stock for rendering (*e.g.*, harmonization of licensing and regulations, creation of regional pickup centers, etc.)?

Compliance, Enforcement, and Incentive Issues

We are also interested in receiving comments on ways to ensure compliance with any dead stock disposal requirements that may eventually be established through rulemaking. Vigorous enforcement, with civil and criminal penalties for violators, is one means to encourage compliance. However, there are obvious limits to APHIS' ability to directly monitor and enforce dead stock disposal

[10] ''International Agricultural Trade,'' February 5, 2002, p.3. Foreign Agricultural Service, USDA.

requirements. Our inspectors cannot directly observe, or even be aware of, all the thousands of animal disposal incidents that occur each day. In addition to enforcement and penalties, there may be a role for incentives to help achieve compliance in dead stock disposal practices.

One possible incentive may be a program to help owners pay for the cost of dead stock disposal under certain circumstances. In a January 2002 report [11] about strengthening regulatory efforts to prevent BSE in the United States, the Government Accounting Office (GAO) noted that USDA sometimes subsidizes animal disposal costs in order to obtain sufficient tissue samples for its BSE surveillance program. The report notes that ''In 1998 USDA implemented a cooperative program with the rendering industry to ensure that carcasses of animals condemned at slaughter for signs of neurological disease are held until test results are completed. Under this program, USDA may share the expenses to store or dispose of carcasses during the testing period.''

Similar programs haves used State, Federal, and industry subsidies to obtain surveillance samples and to encourage responsible dead stock disposal. For example, when cattle with neurological signs of illness are identified at ante mortem inspection in several States, the costs of sample collection and carcass disposal are shared between State government, Federal agencies, and renderers. We are seeking more data on the rationale and operations of these and similar programs, especially including any studies of their overall costs and benefits. We hope to assemble enough data to evaluate the costs and benefits associated with possible dead stock disposal programs that could be designed to maximize benefits to the general public, cattle producers, disposal industries, and others. One possible design for a voucher-subsidized ''multi-benefit'' dead stock disposal program is discussed below.

Consider a program where the Federal or State Government issues qualifying producers a certain number of ''stock disposal vouchers'' each year. If one of the producer's animals dies on-farm, or becomes so ill or injured the producer decides to euthanize it, the producer could use a voucher to cover some or all of the costs of disposing of the animal. The government that issued the vouchers may make arrangements with incinerator operators or other disposal businesses that will honor the vouchers. Dead stock transporters may also be involved in the voucher system. In all cases, businesses may benefit from increased formal disposal of dead stock that, without the voucher system, might be buried on-farm. Solid waste disposal systems may benefit as fewer animals are taken to limited landfill spaces and more animals are incinerated. Public health and environmental values may benefit from fewer casual or illegal animal disposals that pollute groundwater and spread disease.

Such a voucher system could also benefit USDA disease surveillance programs if it includes a requirement to allow USDA to examine and collect samples from the animals for which vouchers are used. USDA staff or accredited veterinarians could be used to examine animals prior to euthanasia and to collect samples from dead animals prior to their disposal.

As an alternative to a predefined voucher system for dead stock disposal, Federal or State agencies could concentrate on identifying, and paying disposal costs for, downer animals that would be euthanized on the farm. This approach might offer a bounty or reward payment for owners who report certain types of animals in their herds—*e.g.*, adult cattle showing certain signs indicative of CNS conditions. The Federal or State agency could then examine the animal, euthanize it, take samples if the examination showed a reason to do so, and arrange to dispose of the cadaver. The owner would receive a small bounty payment and would avoid any disposal costs he might otherwise have faced if he euthanized the animal without government assistance.

The above are just two examples of a design for a ''multi-benefit'' dead stock disposal program; we encourage commenters to suggest others. If your comment suggests a system for dead stock disposal, please include your thoughts on what businesses, levels of government, or other parties should be involved. We are particularly interested in hearing comments on whether such programs should be organized on the county or State level, a regional level, or a national level, and what role the Federal Government should play.

Dead Stock Disposal for Species Other Than Cattle

While this notice primarily addresses disposal of cattle, there are obviously related issues for other species. In particular, commenters may wish to address disposal of sheep and goats with regard to scrapie, disposal of captive elk and deer with regard to CWD, and disposal of all types of livestock with regard to communicable non-TSE diseases. We hope commenters will help us to understand what dead stock disposal issues are common to all of these species, what issues are of particular importance to different types of producers, and the possible costs to involved parties (including producers and taxpayers) of addressing these issues.

Summary of Issues Open for Comment

- What is the preferred approach and associated costs to affected parties for controlling risks associated with disposal of nonambulatory and dead livestock?
- Are there any cross-cutting issues between safe disposal of specified risk materials such as brain and spinal cord and safe disposal options for downer and on-farm dead animals?
- Are there practical ways to cull higher-risk downer cattle, *e.g.* cattle that may have a non-obvious CNS condition, before they are sent to slaughter? How should risk factors such as age, physical condition, and the source and type of cattle be considered when sending downer cattle to slaughter? What would such culling cost affected parties?
- Since APHIS currently relies on collecting samples from downer animals, at slaughter and other locations, as a key part of BSE surveillance, how could we continue to obtain samples for testing from downer cattle if they are not sent to slaughter?
- What carcass disposal methods are safe, fast, complete, and environmentally acceptable? What combination of regulatory requirements, incentives, and cooperative relationships with production and disposal industries would result in sustainable procedures for the safe disposal of dead stock, and what are the costs associated with such solutions?
- Can rendering be an effective means for safely disposing of dead stock in a manner that minimizes risks of spreading BSE and other animal diseases? Under what conditions? What are the associated technical, economic, regional, environmental, and practical business issues?
- What are equitable ways to share the costs of dead stock disposal, to concentrate and increase economic opportunities and social benefits that can be associated with responsible dead stock disposal?
- What businesses, levels of government, or other parties should be involved in dead stock disposal? Should such programs be organized on the

[11] ''MAD COW DISEASE: Improvements in the Animal Feed Ban and Other Regulatory Areas Would Strengthen U.S. Prevention Efforts,'' GAO–02–183, Government Accounting Office, January 2002.

county or State level, a regional level, or a national level, and what role should the Federal Government play?

• Is there a need to particularly address disposal of sheep and goats with regard to scrapie, and disposal of captive elk and deer with regard to CWD? What dead stock disposal issues are common to all species, and what issues are of particular importance to different types of producers?

Done in Washington, DC, this 15th day of January 2003.

Bill Hawks,

Under Secretary for Marketing and Regulatory Programs.

[FR Doc. 03–1210 Filed 1–17–03; 8:45 am]

BILLING CODE 3410–34–P

DEPARTMENT OF AGRICULTURE

Animal and Plant Health Inspection Service

9 CFR Part 94

[Docket No. 02–003–1]

Importation of Pork-Filled Pasta

AGENCY: Animal and Plant Health Inspection Service, USDA.

ACTION: Proposed rule.

SUMMARY: We are proposing to amend the regulations regarding the importation of pork and pork products from regions affected with swine vesicular disease by establishing procedures for the importation of pork-filled pasta into the United States. The proposed procedures would require that the product contain only cooked or dry-cured pork otherwise eligible to enter the United States under the current regulations; that the product not be commingled, directly or indirectly, with products ineligible to enter the United States; and that the product be accompanied by an official veterinary certificate confirming that the product has been prepared in accordance with the regulations. This action would provide for the importation of pork-filled pasta under conditions designed to prevent the introduction of swine vesicular disease into the United States.

DATES: We will consider all comments that we receive on or before March 24, 2003.

ADDRESSES: You may submit comments by postal mail/commercial delivery or by e-mail. If you use postal mail/commercial delivery, please send four copies of your comment (an original and three copies) to: Docket No. 02–003–1, Regulatory Analysis and Development, PPD, APHIS, Station 3C71, 4700 River Road Unit 118, Riverdale, MD 20737–1238. Please state that your comment refers to Docket No. 02–003–1. If you use e-mail, address your comment to *regulations@aphis.usda.gov.* Your comment must be contained in the body of your message; do not send attached files. Please include your name and address in your message and ''Docket No. 02–003–1'' on the subject line.

You may read any comments that we receive on this docket in our reading room. The reading room is located in room 1141 of the USDA South Building, 14th Street and Independence Avenue SW., Washington, DC. Normal reading room hours are 8 a.m. to 4:30 p.m., Monday through Friday, except holidays. To be sure someone is there to help you, please call (202) 690–2817 before coming.

APHIS documents published in the **Federal Register**, and related information, including the names of organizations and individuals who have commented on APHIS dockets, are available on the Internet at *http://www.aphis.usda.gov/ppd/rad/webrepor.html.*

FOR FURTHER INFORMATION CONTACT: Dr. Masoud Malik, Senior Staff Veterinarian, Technical Trade Services, National Center for Import and Export, VS, APHIS, 4700 River Road Unit 39, Riverdale, MD 20737–1231; (301) 734–3277.

SUPPLEMENTARY INFORMATION:

Background

The regulations in 9 CFR part 94 (referred to below as the regulations) prohibit or restrict the importation of specified animals and animal products into the United States to prevent the introduction into the U.S. livestock population of certain contagious animal diseases, including swine vesicular disease (SVD). Section 94.12 of the regulations provides requirements for the importation into the United States of pork and pork products from regions where SVD is known to exist. Section 94.17 of the regulations provides requirements for the importation into the United States for dry-cured pork products from regions where SVD, hog cholera (also known as classical swine fever), foot-and-mouth disease (FMD), rinderpest, and African swine fever exist.

SVD is a highly contagious disease caused by an enterovirus that shows extraordinary resistance to both environmental factors and common disinfectants. SVD rarely results in mortality in infected swine and does not cause severe production losses. Still, the disease can have a major economic impact because eradication is costly and because SVD-free regions often prohibit imports of swine, pork, and pork products from affected regions.

Italy is considered to be affected with SVD and thus is not among those regions designated in § 94.12 as free of the disease. Similarly, Italy is not included among the regions designated in §§ 94.9 and 94.10 as free of hog cholera. Therefore, cooked and dry-cured pork and pork products imported from Italy are subject to the requirements set forth in §§ 94.12 and 94.17.

The Italian Government has requested that facilities in Italy be allowed to export to the United States tortellini (pasta) that is filled with pork. In order to allow this product to enter the United States without increasing the risk of the introduction of SVD, we are proposing to amend § 94.12 to establish procedures that processing facilities in SVD-affected regions would have to follow to ensure that this particular product would be safe to import into the United States. While a specific request from Italy provided the impetus for this proposed rule, the requirements we are proposing would apply to pork-filled pasta products imported into the United States from any region affected by SVD.

Specifically, we are proposing to add a new paragraph (c) to § 94.12 that would delineate processing, recordkeeping, and certification requirements for pork-filled pasta products exported to the United States from SVD-affected regions. Paragraph (c)(1) would stipulate that pork-filled pasta products processed for export to the United States would have to contain only pork or pork products that are otherwise eligible for importation into the United States, *i.e.,* that meet all requirements that apply to cooked pork products under § 94.12 (b)(1)(i), (ii), or (v)[1] or to dry-cured pork products under § 94.17.

The provisions of proposed paragraphs (c)(2), (c)(3), and (c)(4) are intended to prevent contamination via the commingling of ineligible pork or other meat products with pork or pork products eligible for use in pork-filled pasta products for export to the United States. Paragraph (c)(2) would stipulate that pork intended to be used for pork-filled pasta products for export to the

[1] While pork and pork products that meet the requirement of § 94.12(b)(1)(iii) and (iv) are also eligible for importation into the United States, proposed paragraph (c)(1) would not provide for their use in pork-filled pasta products. As neither paragraph requires the pork or pork products to be fully processed in the region of origin, such pork and pork products are not suitable for inclusion in a completed product such as pork-filled pasta.

United States must be stored in a separate room or facility from any meat or meat products not eligible for export to the United States. Paragraph (c)(3) would state that all equipment and machinery that will come in contact with the pork or other ingredients of pork-filled pasta products intended for export to the United States must be cleaned and disinfected before each use. Paragraph (c)(4) would state that processing lines working with pork-filled pasta products for export to the United States must process only pasta containing pork eligible for such exports and that when such lines are working with these pasta products, the remaining lines may work only on pasta products that do not contain meat.

Paragraph (c)(5) would set out cooking and other requirements for pork-filled pasta being exported to the United States to ensure that the product would be shelf stable without refrigeration. Specifically, we would require that during processing, the pork-filled pasta would have to be steam-heated to a minimum internal temperature of 90 °C, then dried, cooled, and packed to make the product shelf stable without refrigeration.

Paragraph (c)(6) would give the Animal and Plant Health Inspection Service the right to conduct periodic inspections of establishments that manufacture pork-filled pasta products for export to the United States in order to verify compliance by these establishments with the regulations in this section.

Paragraph (c)(7) would set out recordkeeping requirements for pork or pork products used in pork-filled pasta products being exported to the United States. A processing facility would have to maintain under lock and key, for a minimum of 2 years, an original record of each lot of pork or pork products used for meat-filled pasta products for U.S. export. Each record would have to include the date that the cooked or dry-cured pork product was received in the processing facility; information on the number of packages, the number of hams or cooked pork products per package, and the weight of each package; a lot number or other identification marks; the health certificate that accompanied the cooked or dry-cured pork product from the slaughter/processing facility to the meat-filled pasta product processing facility; and the date that the product started dry curing (if the product used is a dry-cured ham) or the date that the product was cooked (if the product used is a cooked pork product). These recordkeeping requirements would be consistent with those set out in § 94.17 for exports of dry-cured pork products to the United States.

Finally, paragraph (c)(8) would require that pork-filled pasta arriving in the United States be accompanied by a certificate issued by an official veterinarian of the National Government of the region in which the pasta product is processed stating that the product has been processed in accordance with the requirements discussed in the preceding paragraphs. This certificate would provide further assurance that the processing facilities are complying with our regulations.

Executive Order 12866 and Regulatory Flexibility Act

This proposed rule has been reviewed under Executive Order 12866. The rule has been determined to be not significant for the purposes of Executive Order 12866 and, therefore, has not been reviewed by the Office of Management and Budget.

This proposed rule would amend the regulations in § 94.12 that deal with the importation of pork and pork products from regions affected with SVD by establishing procedures for the safe importation of pork-filled pasta into the United States from Italy and other affected regions. These proposed procedures would allow the importation of this product into the United States while ensuring that the health of the U.S. swine population and the economic viability of the U.S. swine and pork and pork products industries would not be threatened by an incursion of SVD.

These industries play an important role in the U.S. economy. There was a total inventory of 58.698 million swine in the United States as of March 1, 2002.[2] Cash receipts from swine farming in 2001 were about $12.1 billion.[3] The industry marketed 26.7 billion pounds of pork in 2001. Additionally, the United States earned a substantial amount of money from exports of swine and swine products. The United States exported 1.075 billion pounds of pork, valued at $1.283 billion, in 2001. Also 64,912 live swine were exported, which were valued at about $12 million. The United States also imported 717 million pounds of pork in 2001, valued at $771 million, and imported 5,337,088 live swine, all from Canada, valued at $349 million. Domestically, other related agricultural and non-agricultural sectors are dependent on the swine and the swine-product industries for their economic activity. These activities provide employment and income to many households. Maintaining the stability of these industries depends in part on continued efforts to prevent any introduction of SVD into the United States.

The Regulatory Flexibility Act requires that agencies specifically consider the economic impact of their rules on small entities. The domestic entities most likely to be affected by allowing importation of pork-filled pasta products from Italy are durum wheat producers and pasta manufacturing companies.

In 1997, 6,887 farms, over 99 percent of which were considered small,[4] produced about 5.160 billion pounds of durum wheat.[5] In 2001 durum wheat production was estimated at about 5.013 billion pounds on 2.789 million harvested acres.[6] In 2001, the United States exported 3 billion pounds of durum wheat, valued at $215 million. The major destinations were Italy (39 percent), Tunisia (10 percent), Algeria (9 percent), and Mexico (7 percent).[7]

As a new product, dry, shelf-stable, pork-filled tortellini is expected to have a small market. The impact, if any, on durum wheat producers of importation of this product into the United States is also likely to be small. Producers of durum wheat could benefit in the future from any expansion of product range that results from these imports.

There were 141 pasta manufacturing plants in the United States in 2000. Of these, five companies accounted for 55 percent of the sales. The total domestic capacity is estimated to be about 3.4 billion pounds of pasta.[8] Pasta producers are considered small businesses if they employ 500 workers or fewer.[9] Most U.S. pasta manufacturers can be considered small.

[2] USDA/NASS, Quarterly Hogs and Pigs, Agricultural Statistics Board, March 2002.

[3] USDA/ERS, U.S. farm sector cash receipts from sales of agricultural commodities, 1998–2002, February 2002.

[4] North American Industry Classification System (NAICS) code 111140, Wheat Farming. The Small Business Administration has established guidelines for determining which types of firms are to be considered small under the Regulatory Flexibility Act. A wheat farm is considered small if it has annual receipts of $750,000 or less.

[5] USDA/NASS, 1997 Census of Agriculture (for AZ, CA, MN, MT, ND, and SD). These are durum wheat-producing States.

[6] USDA/NASS, Crop Production 2001 Summary, Agricultural Statistics Board, January 2002.

[7] Global Trade Information Services, Inc., World Trade Atlas, United States Edition, December 2001.

[8] Michael Boland and David Barton, ''How Dakota Growers Pasta co-op found success in a highly competitive market,'' July 2001 (*www.rurdev.usda.gov/rbs/pub/jul01/niche.htm*). About 80 million bushels of durum wheat were allocated for food use in 2001. Assuming a bushel of wheat yields 42 pounds of pasta, the amount of wheat in food use equals 3,360 million pounds of pasta.

[9] NAICS code 311823, dry pasta manufacturers.

Compared to total imports of pasta, valued at $324 million in 2001, imports of stuffed pasta make up a relatively small proportion.[10] Additionally, tortellini is just one of the many varieties of stuffed pasta. Other varieties include agnolotti, calazoncelli, cappelletti, fazzoletti, ravioli, and tordelli. Each of these has variations, depending on whether the filling ingredients are fish-based, ground meat, vegetables, cheese, mushrooms, or herbs and spices. Although information on the exact amount of each type imported is not available, the share of each is likely to be small.

As a new variant of these products, dry, shelf-stable, pork-filled tortellini is also likely to have a small market. Imports of this product are likely to be too small to have any price effect at the industry level. No direct price competition would be expected if imports were to be initiated because there are no known domestic producers of pork-filled tortellini. Price competition with other filled pasta products is also considered unlikely because, as a new product with a small market, pork-filled tortellini is unlikely to have a major impact on consumer demand for those other products. Allowing imports of pork-filled tortellini may eventually stimulate new competition by encouraging domestic pasta manufacturers to develop a similar product. Consumers could also benefit from having their choices of pasta products expanded.

Under these circumstances, the Administrator of the Animal and Plant Health Inspection Service has determined that this action would not have a significant economic impact on a substantial number of small entities.

Executive Order 12988

This proposed rule has been reviewed under Executive Order 12988, Civil Justice Reform. If this proposed rule is adopted: (1) All State and local laws and regulations that are inconsistent with this rule will be preempted; (2) no retroactive effect will be given to this rule; and (3) administrative proceedings will not be required before parties may file suit in court challenging this rule.

Paperwork Reduction Act

In accordance with section 3507(d) of the Paperwork Reduction Act of 1995 (44 U.S.C. 3501 *et seq.*), the information collection or recordkeeping requirements included in this proposed rule have been submitted for approval to the Office of Management and Budget (OMB). Please send written comments to the Office of Information and Regulatory Affairs, OMB, Attention: Desk Officer for APHIS, Washington, DC 20503. Please state that your comments refer to Docket No. 02–003–1. Please send a copy of your comments to: (1) Docket No. 02–003–1, Regulatory Analysis and Development, PPD, APHIS, Station 3C71, 4700 River Road Unit 118, Riverdale, MD 20737–1238, and (2) Clearance Officer, OCIO, USDA, room 404–W, 14th Street and Independence Avenue SW., Washington, DC 20250. A comment to OMB is best assured of having its full effect if OMB receives it within 30 days of publication of this proposed rule.

Under this proposed rule, a processing facility that produces pork-filled pasta products for export to the United States would have to keep an original record of each lot of pork or pork products used in such pasta products. In addition, the pork-filled pasta would have to be accompanied by a certificate issued by an official of the National Government of the region in which the pasta product is processed who is authorized to issue the foreign meat inspection certificate required under 9 CFR 327.4, stating that the pork-filled pasta product has been processed in accordance with the requirements of paragraphs (c)(1) through (c)(5) of § 94.12.

We are soliciting comments from the public (as well as affected agencies) concerning our proposed information collection and recordkeeping requirements. These comments will help us:

(1) Evaluate whether the proposed information collection is necessary for the proper performance of our agency's functions, including whether the information will have practical utility;

(2) Evaluate the accuracy of our estimate of the burden of the proposed information collection, including the validity of the methodology and assumptions used;

(3) Enhance the quality, utility, and clarity of the information to be collected; and

(4) Minimize the burden of the information collection on those who are to respond (such as through the use of appropriate automated, electronic, mechanical, or other technological collection techniques or other forms of information technology; *e.g.*, permitting electronic submission of responses).

Estimate of burden: Public reporting burden for this collection of information is estimated to average 1.25 hours per response.

Respondents: Officials of the National Government of the region in which the meat-filled pasta product is processed.

Estimated annual number of respondents: 5.

Estimated annual number of responses per respondent: 20.

Estimated annual number of responses: 100.

Estimated total annual burden on respondents: 125 hours. (Due to averaging, the total annual burden hours may not equal the product of the annual number of responses multiplied by the reporting burden per response.)

Copies of this information collection can be obtained from Mrs. Celeste Sickles, APHIS' Information Collection Coordinator, at (301) 734–7477.

Government Paperwork Elimination Act Compliance

The Animal and Plant Health Inspection Service is committed to compliance with the Government Paperwork Elimination Act (GPEA), which requires Government agencies in general to provide the public the option of submitting information or transacting business electronically to the maximum extent possible. For information pertinent to GPEA compliance related to this proposed rule, please contact Mrs. Celeste Sickles, APHIS' Information Collection Coordinator, at (301) 734–7477.

List of Subjects in 9 CFR Part 94

Animal diseases, Imports, Livestock, Meat and meat products, Milk, Poultry and poultry products, Reporting and recordkeeping requirements.

Accordingly, we propose to amend 9 CFR part 94 as follows:

PART 94—RINDERPEST, FOOT-AND-MOUTH DISEASE, FOWL PEST (FOWL PLAGUE), EXOTIC NEWCASTLE DISEASE, AFRICAN SWINE FEVER, HOG CHOLERA, AND BOVINE SPONGIFORM ENCEPHALOPATHY: PROHIBITED AND RESTRICTED IMPORTATIONS

1. The authority citation for part 94 would continue to read as follows:

Authority: 7 U.S.C. 450, 7711–7714, 7751, 7754, 8303, 8306, 8308, 8310, 8311, and 8315; 21 U.S.C. 136 and 136a; 31 U.S.C. 9701; 42 U.S.C. 4331 and 4332; 7 CFR 2.22, 2.80, and 371.4.

2. In § 94.12, a new paragraph (c) would be added to read as follows:

§ 94.12 Pork and pork products from regions where swine vesicular disease exists.

* * * * *

(c) *Requirements for pork-filled pasta products from regions affected with*

[10] Global Trade Information Services, Inc., World Trade Atlas, United States Edition, December 2001.

swine vesicular disease. (1) Pork-filled pasta products processed for export to the United States may only be filled with pork or pork products that are otherwise eligible to be exported to the United States and that meet the requirements of paragraph (b)(1)(i), (ii), or (v) of this section or of § 94.17.

(2) At the pasta processing establishment, pork intended to be used for pork-filled pasta products for export to the United States must be stored in a separate room or facility from any meat or meat products not eligible for export to the United States.

(3) All equipment and machinery that will come in contact with the pork or other ingredients of pork-filled pasta products intended for export to the United States must be cleaned and disinfected before each use.

(4) Processing lines working with pork-filled pasta products for export to the United States must process only pasta containing pork eligible for export to the United States. When such processing lines are working with pasta products containing pork for export to the United States, other lines may work only on pasta products that do not contain meat.

(5) During processing, the pork-filled pasta must be steam-heated to a minimum internal temperature of 90 °C, then dried, cooled, and packed to make the product shelf stable without refrigeration.

(6) The processing facility must allow periodic inspections by inspectors from the Animal and Plant Health Inspection Service of its facilities, records, and operations.

(7) The processing facility must maintain under lock and key, for a minimum of 2 years, an original record of each lot of pork or pork products used for pork-filled pasta products for export to the United States. Each record must include the following:

(i) The date that the cooked or dry-cured pork product was received in the processing facility;

(ii) The number of packages, the number of hams or cooked pork products per package, and the weight of each package;

(iii) A lot number or other identification marks;

(iv) The health certificate that accompanied the cooked or dry-cured pork product from the slaughter/processing facility to the meat-filled pasta product processing facility; and

(v) The date that the pork or pork product used in the pasta started dry curing (if the product used is a dry-cured ham) or the date that the product was cooked (if the product used is a cooked pork product).

(8) The pork-filled pasta must be accompanied by a certificate issued by an official of the National Government of the region in which the pasta product is processed who is authorized to issue the foreign meat inspection certificate required under § 327.4 of this title, stating that the pork-filled pasta product has been processed in accordance with the requirements of paragraphs (c)(1) through (c)(5) of this section. Upon arrival of the pork-filled pasta in the United States, the certificate must be presented to an inspector at the port of arrival.

Done in Washington, DC, this 14th day of January 2003.

Peter Fernandez,

Acting Administrator, Animal and Plant Health Inspection Service.

[FR Doc. 03–1213 Filed 1–17–03; 8:45 am]

BILLING CODE 3410–34–P

DEPARTMENT OF TRANSPORTATION

Federal Aviation Administration

14 CFR Part 39

[Docket No. 2002–SW–05–AD]

RIN 2120–AA64

Airworthiness Directives; Eurocopter France Model AS350B3 Helicopters

AGENCY: Federal Aviation Administration, DOT.

ACTION: Notice of proposed rulemaking (NPRM).

SUMMARY: This document proposes adopting a new airworthiness directive (AD) for Eurocopter France (Eurocopter) Model AS350B3 helicopters. This proposal would require inspecting the ASU No. 2 printed circuit board (PCB) to determine if the resistor R8 is installed, and if it is not installed, replacing the PCB with an airworthy PCB with that resistor installed. This proposal is prompted by the discovery of a PCB without a critical resistor that polarizes the voltage regulator that regulates electrical power to a critical warning light, a critical caution light, and the main rotor revolutions per minute (RPM) signal to the vehicle engine management display (VEMD). The actions specified by the proposed AD are intended to prevent the malfunction of the two critical lights and the rotor RPM signal to the VEMD, failure of these components to timely alert the pilot to the associated malfunctions, further helicopter damage because of these malfunctions, and subsequent loss of control of the helicopter.

DATES: Comments must be received on or before March 24, 2003.

ADDRESSES: Submit comments in triplicate to the Federal Aviation Administration (FAA), Office of the Regional Counsel, Southwest Region, Attention: Rules Docket No. 2002–SW–05–AD, 2601 Meacham Blvd., Room 663, Fort Worth, Texas 76137. You may also send comments electronically to the Rules Docket at the following address: *9-asw-adcomments@faa.gov.* Comments may be inspected at the Office of the Regional Counsel between 9 a.m. and 3 p.m., Monday through Friday, except Federal holidays.

FOR FURTHER INFORMATION CONTACT: Carroll Wright, Aviation Safety Engineer, FAA, Rotorcraft Directorate, Regulations Group, Fort Worth, Texas 76193–0111, telephone (817) 222–5120, fax (817) 222–5961.

SUPPLEMENTARY INFORMATION:

Comments Invited

Interested persons are invited to participate in the making of the proposed rule by submitting such written data, views, or arguments as they may desire. Communications should identify the Rules Docket number and be submitted in triplicate to the address specified above. All communications received on or before the closing date for comments will be considered before taking action on the proposed rule. The proposals contained in this document may be changed in light of the comments received.

Comments are specifically invited on the overall regulatory, economic, environmental, and energy aspects of the proposed rule. All comments submitted will be available, both before and after the closing date for comments, in the Rules Docket for examination by interested persons. A report summarizing each FAA-public contact concerned with the substance of this proposal will be filed in the Rules Docket.

Commenters wishing the FAA to acknowledge receipt of their mailed comments submitted in response to this proposal must submit a self-addressed, stamped postcard on which the following statement is made: ''Comments to Docket No. 2002–SW–05–AD.'' The postcard will be date stamped and returned to the commenter.

Discussion

The Direction Generale De L'Aviation Civile (DGAC), the airworthiness authority for France, notified the FAA that an unsafe condition may exist on Eurocopter Model AS350B3 helicopters.

The DGAC advises that the absence of a resistor R8 on the ASU No. 2 boards can lead to a malfunction of the electric circuits supplying the ''BATT. TEMP.'' red warning light, the ''ENGINE CHIP'' amber caution light, and the rotor RPM signal output to the VEMD.

This proposal is prompted by an anomaly discovered by the manufacturer. The actions specified by this proposed AD are intended to prevent failure of the ''BATT. TEMP.'' warning light, which, if combined with a battery overheat, can result in a battery thermal runaway without the pilot's knowledge. An uncontrolled battery thermal runaway can result in an explosion that could cause loss of the control of the helicopter.

Eurocopter has issued Service Bulletin No. 77.00.07, dated March 27, 2000, which specifies checking to determine if the resistor R8 is installed on the PCB within 25 hours time-in-service (TIS) and, if a resistor R8 is not installed, replacing the PCB with one that has a resitor R8 installed within 50 hours TIS. The DGAC classified this service bulletin as mandatory and issued AD No. 2001–319–083(A), dated July 25, 2001, to ensure the continued airworthiness of these helicopters in France.

This helicopter model is manufactured in France and is type certificated for operation in the United States under the provisions of 14 CFR 21.29 and the applicable bilateral agreement. Pursuant to the applicable bilateral agreement, the DGAC has kept the FAA informed of the situation described above. The FAA has examined the findings of the DGAC, reviewed all available information, and determined that AD action is necessary for products of this type design that are certificated for operation in the United States.

This unsafe condition is likely to exist or develop on other helicopters of the same type design registered in the United States. Therefore, the proposed AD would require, within 15 hours time-in-service (TIS), inspecting the ASU No. 2 PCB on helicopters with serial numbers 3062 and earlier to determine if the resistor R8 is installed, and if it is not installed, replacing the PCB with an airworthy PCB with resistor R8 installed within 50 hours TIS.

The FAA estimates that 30 helicopters of U.S. registry would be affected by this proposed AD, that it would take approximately 1 work hour per helicopter to accomplish the proposed actions, and that the average labor rate is $60 per work hour. Required parts would cost $1,200. The manufacturer states in its service bulletin that PCB's will be replaced free of charge. Based on these figures, the total cost impact of the proposed AD on U.S. operators is estimated to be $37,800, if a PCB is replaced in the entire fleet and there is no free replacement by the manufacturer.

The regulations proposed herein would not have a substantial direct effect on the States, on the relationship between the national Government and the States, or on the distribution of power and responsibilities among the various levels of government. Therefore, it is determined that this proposal would not have federalism implications under Executive Order 13132.

For the reasons discussed above, I certify that this proposed regulation (1) is not a ''significant regulatory action'' under Executive Order 12866; (2) is not a ''significant rule'' under the DOT Regulatory Policies and Procedures (44 FR 11034, February 26, 1979); and (3) if promulgated, will not have a significant economic impact, positive or negative, on a substantial number of small entities under the criteria of the Regulatory Flexibility Act. A copy of the draft regulatory evaluation prepared for this action is contained in the Rules Docket. A copy of it may be obtained by contacting the Rules Docket at the location provided under the caption **ADDRESSES.**

List of Subjects in 14 CFR Part 39

Air transportation, Aircraft, Aviation safety, Safety.

The Proposed Amendment

Accordingly, pursuant to the authority delegated to me by the Administrator, the Federal Aviation Administration proposes to amend part 39 of the Federal Aviation Regulations (14 CFR part 39) as follows:

PART 39—AIRWORTHINESS DIRECTIVES

1. The authority citation for part 39 continues to read as follows:

Authority: 49 U.S.C. 106(g), 40113, 44701.

§ 39.13 [Amended]

2. Section 39.13 is amended by adding a new airworthiness directive to read as follows:

Eurocopter France: Docket No. 2002–SW–05–AD.

Applicability: Model AS350B3 helicopters, serial numbers (S/N) 3062 and earlier, certificated in any category.

Note 1: This AD applies to each helicopter identified in the preceding applicability provision, regardless of whether it has been otherwise modified, altered, or repaired in the area subject to the requirements of this AD. For helicopters that have been modified, altered, or repaired so that the performance of the requirements of this AD is affected, the owner/operator must request approval for an alternative method of compliance in accordance with paragraph (c) of this AD. The request should include an assessment of the effect of the modification, alteration, or repair on the unsafe condition addressed by this AD; and if the unsafe condition has not been eliminated, the request should include specific proposed actions to address it.

Compliance: Required as indicated, unless accomplished previously.

To prevent malfunction of the electrical circuits controlling the ''BATT. TEMP.'' red warning light, the ''ENGINE CHIP'' amber caution and the rotor revolutions-per-minute (RPM) signal output to the vehicle engine management display (VEMD), accomplish the following:

(a) Within 15 hours time-in-service (TIS), inspect the ASU No. 2 printed circuit board (PCB), part number SE 03022, to determine if resistor R8 is installed.

(b) If the resistor R8 is not installed, within 50 hours TIS, replace the PCB with an airworthy PCB that has resistor R8 installed.

Note 2: Eurocopter Service Bulletin No. 77.00.07, dated March 27, 2000, pertains to the subject of this AD.

(c) An alternative method of compliance or adjustment of the compliance time that provides an acceptable level of safety may be used if approved by the Manager, Regulations Group, Rotorcraft Directorate, FAA. Operators shall submit their requests through an FAA Principal Maintenance Inspector, who may concur or comment and then send it to the Manager, Regulations Group.

Note 3: Information concerning the existence of approved alternative methods of compliance with this AD, if any, may be obtained from the Regulations Group.

(d) Special flight permits may be issued in accordance with 14 CFR 21.197 and 21.199 to operate the helicopter to a location where the requirements of this AD can be accomplished.

Note 4: The subject of this AD is addressed in Direction Generale De L'Aviation Civile (France) AD 2001–319–083(A), dated July 25, 2001.

Issued in Fort Worth, Texas, on January 11, 2003.

David A. Downey,

Manager, Rotorcraft Directorate, Aircraft Certification Service.

[FR Doc. 03–1191 Filed 1–17–03; 8:45 am]

BILLING CODE 4910–13–P

DEPARTMENT OF THE TREASURY

31 CFR Part 103

RIN 1506–AA37

Financial Crimes Enforcement Network; Amendment to the Bank Secrecy Act Regulations—Requirement That Mutual Funds Report Suspicious Transactions

AGENCY: Financial Crimes Enforcement Network (''FinCEN''), Treasury.

ACTION: Notice of proposed rulemaking.

SUMMARY: This document contains an amendment to the regulations implementing the statute generally known as the Bank Secrecy Act. The amendment would require mutual funds to report suspicious transactions to the Department of the Treasury. The amendment constitutes a further step in the creation of a comprehensive system for the reporting of suspicious transactions by the major categories of financial institutions operating in the United States, as a part of the counter-money laundering program of the Department of the Treasury.

DATES: Written comments on all aspects of the notice of proposed rulemaking are welcome and must be received on or before March 24, 2003.

ADDRESSES: Commenters are encouraged to submit comments by electronic mail because paper mail in the Washington, DC, area may be delayed. Comments submitted by electronic mail may be sent to *regcomments@fincen.treas.gov,* with the caption, in the body of the text, ''ATTN: NPRM—Suspicious Transaction Reporting—Mutual Funds.'' Comments also may be submitted by paper mail to FinCEN, P.O. Box 39, Vienna, Virginia 22183–0039, ATTN: NPRM—Suspicious Transaction Reporting—Mutual Funds. Comments should be sent by one method only. For additional instructions on the submission of comments, *see* **SUPPLEMENTARY INFORMATION** under the heading ''Submission of Comments.''

FOR FURTHER INFORMATION CONTACT: Office of Regulatory Programs, FinCEN, (202) 354–6400; and Office of Chief Counsel, FinCEN, at (703) 905–3590 (not toll-free numbers).

SUPPLEMENTARY INFORMATION:

I. Background

A. Statutory Provisions

The Bank Secrecy Act [1] authorizes the Secretary of the Treasury, *inter alia,* to issue regulations requiring financial institutions to keep records and file reports that are determined to have a high degree of usefulness in criminal, tax, and regulatory matters, or in the conduct of intelligence or counter-intelligence activities, to protect against international terrorism, and to implement counter-money laundering programs and compliance procedures.[2] Regulations implementing title II of the Bank Secrecy Act (codified at 31 U.S.C. 5311–5330) appear at 31 CFR part 103. The authority of the Secretary to administer the Bank Secrecy Act has been delegated to the Director of FinCEN.

With the enactment of 31 U.S.C. 5318(g) in 1992,[3] Congress authorized the Secretary of the Treasury to require financial institutions to report suspicious transactions. As amended by the USA Patriot Act, subsection (g)(1) states generally:

> The Secretary may require any financial institution, and any director, officer, employee, or agent of any financial institution, to report any suspicious transaction relevant to a possible violation of law or regulation.

Subsection (g)(2)(A) provides further:

> If a financial institution or any director, officer, employee, or agent of any financial institution, voluntarily or pursuant to this section or any other authority, reports a suspicious transaction to a government agency—
>
> (i) The financial institution, director, officer, employee, or agent may not notify any person involved in the transaction that the transaction has been reported; and
>
> (ii) No officer or employee of the Federal government or of any State, local, tribal, or territorial government within the United States, who has any knowledge that such report was made may disclose to any person involved in the transaction that the transaction has been reported, other than as necessary to fulfill the official duties of such officer or employee.

Subsection (g)(3)(A) provides that neither a financial institution, nor any director, officer, employee, or agent of any financial institution—

> That makes a voluntary disclosure of any possible violation of law or regulation to a government agency or a makes a disclosure pursuant to this subsection or any other authority * * * shall * * * be liable to any person under any law or regulation of the United States or any constitution, law or regulation of any State or political subdivision of any State, or under any contract or other legally enforceable agreement (including any arbitration agreement), for such disclosure or for any failure to provide notice of such disclosure to the person who is the subject of such disclosure or any other person identified in the disclosure.

Finally, subsection (g)(4) requires the Secretary of the Treasury, ''to the extent practicable and appropriate,'' to designate ''a single officer or agency of the United States to whom such reports shall be made.''[4] The designated agency is in turn responsible for referring any report of a suspicious transaction to ''any appropriate law enforcement, supervisory agency, or United States intelligence agency for use in the conduct of intelligence or counterintelligence activities, including analysis, to protect against international terrorism.'' [5]

B. Overview of Mutual Funds

The application of the proposed rule would be limited to investment companies that are ''mutual funds,'' which are open-end management investment companies as described in the Investment Company Act. Mutual funds are by far the predominant type of investment company. In 2001, approximately $7 trillion was invested in U.S. mutual funds, representing more than 95 percent of the assets held by investment companies regulated by the Securities and Exchange Commission (''SEC'').[6] Currently, more than 3000 active mutual funds are registered with the SEC.[7]

---

[1] Public Law 91–508, as amended, codified at 12 U.S.C. 1829b, 12 U.S.C. 1951–1959, and 31 U.S.C. 5311–5331.

[2] Language expanding the scope of the Bank Secrecy Act to intelligence or counter-intelligence activities to protect against international terrorism was added by section 358 of the Uniting and Strengthening America by Providing Appropriate Tools Required to Intercept and Obstruct Terrorism (USA PATRIOT Act) Act of 2001 (the ''USA Patriot Act''), Public Law 107–56.

[3] 31 U.S.C. 5318(g) was added to the Bank Secrecy Act by section 1517 of the Annunzio-Wylie Anti-Money Laundering Act (the ''Annunzio-Wylie Anti-Money Laundering Act''), title XV of the Housing and Community Development Act of 1992, Public Law 102–550; it was expanded by section 403 of the Money Laundering Suppression Act of title IV of the Riegle Community Development and Regulatory Improvement Act of 1994, Public Law 103–325, to require designation of a single government recipient for reports of suspicious transactions.

[4] This designation does not preclude the authority of supervisory agencies to require financial institutions to submit other reports to the same agency or another agency ''pursuant to any applicable provision of law.'' 31 U.S.C. 5318(g)(4)(C).

[5] 31 U.S.C. 5318(g)(4)(B).

[6] The staff of the SEC estimates, based on filings with the SEC, that as of December 2001, approximately $6.97 trillion was invested in U.S. mutual funds (including $741 billion invested in open-end management companies that fund variable life insurance and variable annuity contracts, and $23 billion invested in open-end management companies that are exchange-traded funds).

[7] Approximately 1400 of these funds are ''series companies'' with an aggregate 7200 portfolios. A ''series company'' is a registered investment company that issues two or more classes or series of preferred or special stock, each of which is

A mutual fund is typically governed by a board of directors or trustees, which is responsible for overseeing the management of the fund's business affairs. Mutual funds are typically organized and operated by an investment adviser responsible for the day-to-day operations of the fund. In most cases, the investment adviser is a separate and distinct legal entity from the investment company. The investment adviser is primarily responsible for selecting portfolio investments consistent with the objectives and policies stated in the investment company's prospectus. The investment adviser or a third party may provide administrative services to the fund. Mutual funds also employ transfer agents to conduct recordkeeping and related functions.[8]

A mutual fund offers its shares continuously and is required to provide its shareholders the right to redeem at net asset value on a daily basis.[9] Most mutual funds sell their shares to investors through broker-dealers, banks, and other financial intermediaries.[10] Some funds are sold directly through affiliates of the fund itself. If fund shares are sold through an intermediary, the intermediary may maintain an omnibus account with the fund, in which case neither the fund nor its transfer agent has direct contact with the shareholders. The intermediary receives and processes individual investment and redemption requests from its customers, and has access to individuals' trading activity. Although neither the mutual fund nor its transfer agent necessarily knows the identity of individual investors that hold fund shares through a financial intermediary's omnibus account, the intermediary does have access to that information, and may itself have anti-money laundering responsibilities.[11] A foreign broker-dealer without independent anti-money laundering requirements may also maintain omnibus accounts with the fund. This kind of omnibus account falls within the definition of ''correspondent account'' under section 312 of the Act and as such is subject to due diligence and possibly enhanced due diligence requirements under that section of the Act and implementing regulations.[12]

C. Money Laundering Risks Associated with Mutual Funds

Mutual funds present real opportunities for money laundering. They are widely held, easy to access, and can be redeemed quickly.[13] Indeed, money market funds, which typically offer check writing privileges, function much like bank checking accounts.[14] But because mutual funds rarely receive from or disburse to shareholders significant amounts of currency, they are not as likely as other types of financial institutions (*e.g.*, banks) to be used during the initial (or ''placement'') stage of the money laundering process.[15] Money laundering is more likely to occur through mutual funds at the later stages of the money laundering process (the ''layering'' and ''integration'' stages).[16]

The proposed rule contained in this document is just one of several steps taken by the Department of the Treasury to address comprehensively the risk of money laundering through mutual funds. In April 2002, FinCEN issued an interim final rule requiring mutual funds to develop and implement an anti-money laundering program to prevent them from being used to launder money or finance terrorist activities, which includes achieving and monitoring compliance with the applicable requirements of the Bank Secrecy Act and the Department of the Treasury's implementing regulations.[17] In July 2002, the Department of the Treasury and the SEC jointly issued a proposed regulation to require mutual funds to implement reasonable procedures to (1) verify the identity of any person seeking to open an account, to the extent reasonable and practicable, (2) maintain records of the information used to verify the person's identity, and (3) determine whether the person appears on any lists of known or suspected terrorists or terrorist organizations provided to investment companies by any government agency.[18]

This notice of proposed rulemaking follows other recent actions that expand the application of requirements that financial institutions report suspicious transactions. For example, since April 1996, rules issued by FinCEN under the authority contained in 31 U.S.C. 5318(g) have required banks, thrifts, and other banking organizations to report suspicious transactions.[19] In collaboration with FinCEN, the federal bank supervisors concurrently issued suspicious transaction reporting rules

preferred over all other classes or series with respect to assets specifically allocated to that class or series. 17 CFR 270.18f–2. The assets allocated to such a class or series are commonly known as a ''portfolio.'' The series or portfolios of a series company operate, for many purposes, as separate investment companies.

[8] Transfer agents maintain records of shareholder accounts, calculate and disburse dividends, and prepare and mail shareholder account statements, federal income tax information, and other shareholder notices. Some transfer agents prepare and mail statements confirming shareholder transactions and account balances, and maintain customer service departments to respond to shareholder inquiries.

[9] Section 5(a) of the Investment Company Act defines an open-end investment company as a management investment company that issues or has outstanding any ''redeemable security.'' 15 U.S.C. 80a–5(a). A redeemable security entitles the holder to receive, upon presentation to the issuer, the holder's approximate proportionate share of the issuer's current net assets, or the cash such share represents. 15 U.S.C. 80a–2(a)(32).

[10] Mutual funds usually offer their shares to the public through a principal underwriter, which is in most cases regulated as a broker-dealer and is subject to rules promulgated by the National Association of Securities Dealers, Inc. With respect to transactions occurring after December 30, 2002, brokers and dealers in securities are required to report suspicious transactions to the Treasury under 31 U.S.C. 5318(g). *See* 31 CFR 103.19 (suspicious transaction reports by securities brokers or dealers).

[11] Broker-dealers in securities and futures commission merchants are subject to the anti-money laundering compliance requirements of the Bank Secrecy Act.

[12] Pursuant to section 312, regulations have been proposed that would require U.S. financial institutions offering correspondent accounts to perform due diligence and, in appropriate circumstances, enhanced due diligence on their correspondents. *See* 67 FR 37736 (May 30, 2002) and 67 FR 48348 (July 23, 2002).

[13] Section 22(e) of the Investment Company Act requires a mutual fund to redeem the value of shares within seven days of receiving a redemption request. 15 U.S.C. 80a–22(e).

[14] *See* Investment Company Act Release No. 17589 (July 17, 1990) (55 FR 30240 (July 25, 1990)).

[15] It is possible that some structuring schemes used in the placement stage will involve monetary instruments such as money orders, and that money launderers could attempt to use mutual funds that accept this form of payment. Although the known experience of depository institutions with significant money laundering is greater than the known experience of mutual funds, this difference may reflect the fact that criminal funds enter mutual funds at a later stage in the laundering process, when those funds are less immediately identifiable than at the placement stage. Past investigative attention, however, has focused more intensively on the ''placement'' stage of money laundering (especially the suspicious placement into the financial system of large amounts of currency) than on transfers or conversions of illicit funds once they are already in the financial system.

[16] ''Layering'' involves the distancing of illegal proceeds from their criminal source through the creation of complex layers of financial transactions. Money launderers could use mutual fund accounts to layer their funds by, for example, sending and receiving money and wiring it quickly through several accounts and multiple institutions, or by redeeming fund shares purchased with illegal proceeds and then reinvesting the proceeds received in anther fund. Layering could also involve purchasing funds in the name of a fictitious corporation or an entity designed to conceal the true owners. Mutual funds could also be used to integrate illicit income into legitimate assets. ''Integration'' occurs when illegal proceeds appear to have been derived from a legitimate source.

[17] *See* 76 FR 21117 (April 29, 2002).

[18] *See* 67 FR 48318 (July 23, 2002). Under the proposed rule, a mutual fund may contractually delegate the implementation and operation of its customer identification program to a service provider such as a transfer agent although the mutual fund would continue to be responsible for its compliance with applicable requirements.

[19] *See* 31 CFR 103.18 (requiring banks, thrifts, and other banking organizations to report suspicious transactions).

under their own authority.[20] The bank supervisory agency rules apply to banks, bank holding companies, and non-depository institution affiliates and subsidiaries of banks and bank holding companies. Money services businesses have been required to report suspicious transactions to the Department of the Treasury since the beginning of 2002. In July 2002, FinCEN took a further step in the creation of a comprehensive system for the reporting of suspicious transactions by the major categories of financial institutions operating in the United States, by requiring brokers and dealers in securities to report suspicious transactions.[21] In October 2002, FinCEN issued a final rule requiring casinos to report suspicious transactions. The proposed rule contained in this document would extend this requirement to mutual funds. Suspicious transaction reporting by mutual funds can provide highly useful information in law enforcement and regulatory investigations and proceedings, and in the conduct of intelligence activities to protect against international terrorism.[22]

II. Specific Provisions

A. 103.15(a)—Reports by Mutual Funds of Suspicious Transactions

Section 103.15(a) contains the rules setting forth the obligation of mutual funds to report suspicious transactions that are conducted or attempted by, at, or through a mutual fund and involve or aggregate at least $5,000 in funds or other assets. It is important to recognize that the obligation to report a transaction under this rule and 31 U.S.C. 5318(g) would apply whether or not the transaction involves currency.[23] Treasury is aware that the use of currency by mutual funds is rare.

The obligation extends to transactions conducted or attempted by, at, or through, the mutual fund. However, paragraph (a) also contains language designed to encourage the reporting of transactions that appear relevant to violations of law or regulation, even in cases in which the rule does not explicitly so require (for example, in the case of a transaction falling below the $5,000 threshold in the rule).

Section 103.15(a) contains the general statement of the obligation to file reports. To clarify that the proposed rule creates a reporting requirement that is uniform with that for other financial institutions, the language of the reporting obligation incorporates language from the suspicious activity reporting rules applicable to other financial institutions, such as banks, casinos, and money services businesses, requiring the reporting of ''any suspicious transaction relevant to a possible violation of law or regulation.'' Furthermore, a mutual fund may also report ''any suspicious transaction that it believes is relevant to a possible violation of any law or regulation but whose reporting is not required'' by the proposed rule. For example, a mutual fund may report a suspected violation of law that involves less than $5,000. Such voluntary reporting would be subject to the same protection from liability as mandatory reporting, pursuant to 31 U.S.C. 5318(g)(3).

The proposed rule requires reporting by mutual funds, but not by affiliated persons of mutual funds. Some affiliates, such as broker-dealers, are subject to their own reporting rule. Others may be subject to future rules.

Mutual funds typically conduct many operations through separate entities, which may or may not be affiliated persons of the mutual fund. Personnel of these separate entities may be in the best position to perform the reporting obligation. It is permissible for a mutual fund to contractually delegate performance of the reporting obligation to another affiliated or unaffiliated service provider, such as a transfer agent. The mutual fund, however, remains responsible for assuring compliance with the rule, and must actively monitor the procedures for reporting suspicious transactions.

Section 103.15 (a)(2) specifies that the proposed rule requires the reporting of suspicious transactions that involve or aggregate at least $5,000 in funds or other assets. The suspicious transaction reporting rules, however, are not intended to operate (and indeed cannot properly operate) in a mechanical fashion. Rather, the suspicious transaction reporting requirements are intended to function in such a way as to have financial institutions evaluate customer activity and relationships for money laundering risks.[24]

Section 103.15(a)(2) specifies four categories of transactions that require reporting if the mutual fund knows, suspects, or has reason to suspect that any such category applies to a transaction, or a pattern of transactions of which the transaction is a part. The ''knows, suspects, or has reason to suspect'' standard incorporates a concept of due diligence in the reporting requirement.

The first category, described in proposed section 103.15(a)(2)(i), includes transactions involving funds derived from illegal activity, or intended or conducted in order to hide or disguise funds derived from such illegal activity as part of a plan to violate or evade any federal law or regulation or to avoid any transaction reporting requirement under federal law or regulation. The second category, described in section 103.15(a)(2)(ii), includes transactions designed, whether through structuring or other means, to evade the requirements of the Bank Secrecy Act. The third category, described in section 103.15(a)(2)(iii), includes transactions that appear to serve no business or apparent lawful purposes, and for which the mutual fund knows of no reasonable explanation after examining the available facts relating to the transaction and the parties. The fourth category, described in section 103.15(a)(2)(iv), includes any other transactions that involve the use of the mutual fund to facilitate criminal activity.[25]

A mutual fund must base its determination as to whether a report is required on all the facts and circumstances relating to the transaction and the customer of the mutual fund in question.[26] Different fact patterns will

[20] *See* 12 CFR 21.11 (issued by the Office of the Comptroller of the Currency); 12 CFR 208.62 (issued by the Board of Governors of the Federal Reserve System); 12 CFR 353.3 (issued by the Federal Deposit Insurance Corporation); 12 CFR 563.180 (issued by the Office of Thrift Supervision); 12 CFR 748.1 (issued by the National Credit Union Administration).

[21] *See* 67 FR 44048 (July 1, 2002).

[22] *See* 31 U.S.C. 5311 (stating purpose of the reporting authority under the Bank Secrecy Act).

[23] Many currency transactions are *not* indicative of money laundering or other violations of law, a fact recognized both by Congress, in authorizing reform of the currency transaction reporting system, and by FinCEN, in issuing rules to implement that system (*see* 31 U.S.C. 5313(d) and 31 CFR 103.22(d), 63 FR 50147 (September 21, 1998)). Many non-currency transactions, (for example, fund transfers) *can* indicate illicit activity, especially in light of the breadth of the statutes that make money laundering a crime. *See* 18 U.S.C. 1956 and 1957.

[24] Thus, for example, transactions involving investments by the pension fund of a publicly traded corporation, even though involving a large dollar amount, would likely require a more limited scrutiny than less typical transactions such as those involving customers who wish to use currency or money orders to purchase mutual fund shares, even though the dollar amounts in those latter cases may be relatively small.

[25] The fourth reporting category has been added to the suspicious activity reporting rules promulgated since the passage of the USA Patriot Act to make it clear that the requirement to report suspicious activity encompasses the reporting of transactions in which legally derived funds are used for criminal activity, such as the financing of terrorism.

[26] In the case of a transaction conducted through an omnibus account maintained by an intermediary, a mutual fund may not know, suspect, or have reason to suspect that the transaction is one for which reporting would be required, because a fund typically has little or no information about individual customers represented in an omnibus account. Omnibus accounts are,

require different types of judgments. In some cases, the facts of the transaction may indicate the need to report. For example, the fact that a customer refuses to provide information necessary for the mutual fund to make reports or keep records required by this part or other regulations, provides information that the mutual fund determines to be false, or seeks to change or cancel a transaction after such person is informed of information verification or recordkeeping requirements relevant to the transactions, would indicate that a Suspicious Activity Report (''SAR–SF'')[27] should be filed.[28] In other situations, determining whether a transaction is suspicious within the meaning of the rule may require a more involved judgment. Transactions that raise the need for such judgment may include, for example, (i) transmission or receipt of funds transfers without normal identifying information, or in a manner that indicates an attempt to disguise or hide the country of origin or destination, or the identity of the customer sending the funds, or the beneficiary to which the funds are sent; or (ii) repeated use of a mutual fund as a temporary resting place for funds from multiple sources without a clear business purpose. The judgments involved will also extend to whether the facts and circumstances and the institution's knowledge of its customer provide a reasonable explanation for the transaction that removes it from the suspicious category.

The means of commerce and the techniques of money launderers are continually evolving, and there is no way to provide an exhaustive list of suspicious transactions. FinCEN intends to continue its dialogue with mutual funds about the manner in which a combination of government guidance, training programs, and government-industry information exchange can smooth the way for operation of the new suspicious activity reporting system in as flexible and cost-efficient a way as possible.

Individual mutual funds are frequently part of a complex of related funds, and it is possible that more than one mutual fund would be obligated to report the same transaction. Section 103.15(a)(3) of the proposed rule would permit all of the mutual funds involved in a particular transaction to file a single report as long as the report contains all relevant facts. Moreover, a person such as a broker-dealer that is a service provider to the fund may have a separate suspicious activity reporting obligation with regard to the same transaction. The proposed rule would permit the mutual fund's report to satisfy that person's reporting obligation as well. Thus, a service provider to which multiple mutual funds have contractually delegated their reporting obligation may file a single report on behalf of itself and all of the funds involved in the same transaction or series of transactions.

B. 103.15(b)—Filing Procedures

Section 103.15(b) sets forth the filing procedures to be followed by mutual funds making reports of suspicious transactions. Within 30 days after a mutual fund becomes aware of a suspicious transaction, the fund must report the transaction by completing a SAR–SF, collecting and maintaining supporting documentation, and filing the SAR–SF in a central location, to be determined by FinCEN. The SAR–SF will resemble the SAR used by banks to report suspicious transactions, and a draft form will be made available for comment by publication in the **Federal Register**.

If the mutual fund does not identify a suspect on the date of the initial detection, the mutual fund may delay filing a SAR–SF for an additional 30 days, but may not delay filing more than 60 days after the date of such initial detection. In situations involving violations that require immediate attention, such as terrorist financing or ongoing money laundering schemes, the mutual fund should telephone the appropriate law enforcement authority and the SEC in addition to filing a SAR–SF.

C. 103.15(c)—Retention of Records

Section 103.15(c) provides that filing mutual funds must maintain copies of SAR–SFs and the original related documentation for a period of five years from the date of filing. As indicated above, supporting documentation is to be made available to FinCEN, the SEC, and other appropriate law enforcement and regulatory authorities on request.

D. 103.15(d)—Confidentiality of Reports

Section 103.15(d) reflects the statutory bar against the disclosure of information filed in, or the fact of filing, a suspicious activity report (whether the report is required by the proposed rule or is filed voluntarily). *See* 31 U.S.C. 5318(g)(2). Thus, the paragraph specifically prohibits persons filing SAR–SFs from making any disclosure, except to law enforcement and regulatory agencies, about either the reports themselves or supporting documentation.

This paragraph does not prohibit mutual funds from discussing with each other (or with service providers that are involved in the transaction, such as their investment advisers, transfer agents, principal underwriters, and broker-dealers) for purposes of section 103.15(a)(3), suspicious activity involving a transaction with which the mutual funds have been involved, or the determination of which mutual fund will file a SAR–SF in such a case.

E. 103.15(e)—Limitation of Liability

Section 5318(g) of title 31, as amended by the USA Patriot Act, provides protection from liability for making reports of suspicious transactions, and for failures to disclose the fact of such reporting to persons involved in such transactions. The safe harbor provision of 31 U.S.C. 5318(g) clearly protects any financial institution from civil liability for reporting suspicious activity.[29] Section 351 of the USA Patriot Act clarifies that the safe harbor applies also to the voluntary reporting of suspicious transactions, and section 103.15(e) of the proposed rule reflects this clarification.

It must be noted that, while the proposed rule reiterates and clarifies the broad protection from liability for making reports and for failures to disclose the fact of such reporting that is contained in the statutory safe harbor provision, the regulatory provisions do not extend the scope of either the statutory prohibition or the statutory protection. Inclusion of safe harbor language in the proposal is in no way intended to suggest that the safe harbor can override the non-disclosure provisions of the law and regulations. The prohibition on disclosure (other than as required by the proposed rule) applies regardless of any protection from liability.

however, usually maintained by a person, such as a broker-dealer, that has a reporting obligation. The omnibus account holder (*i.e.*, the financial intermediary) is itself a customer of the mutual fund for purposes of the proposed rule.

[27] The term ''SF'' is an abbreviation for ''Securities and Futures Industry,'' the form that will be used for reporting by members of the securities and futures industry. *See* 67 FR 50751 (August 5, 2002).

[28] As section 103.15(d) of the proposed rule makes clear, the mutual fund must not notify the customer that it intends to file or has filed a suspicious transaction report with respect to the customer's activity.

[29] *See Lee* v. *Bankers Trust Co.,* 166 F.3d 540, 544 (2nd Cir. 1999) (stating that in enacting 31 U.S.C. 5318(g), Congress ''broadly and unambiguously provide[d] * * * immunity from any law (except the federal Constitution) for any statement made in a SAR by anyone connected to a financial institution'').

F. 103.15(f)—Examinations and Enforcement

Section 103.15(f) notes that the Department of the Treasury or its delegate will examine compliance with the obligation to report suspicious transactions, and provides that failure to comply with the rule may constitute a violation of the Bank Secrecy Act and the Bank Secrecy Act regulations. In examining any particular failure to report a transaction as required by this section, FinCEN and the SEC may take into account the relationship between the particular failure to report and the adequacy of the implementation and operation of a mutual fund's compliance procedures.

G. 103.15(g)—Effective Date

Finally, section 103.15(g) provides that compliance with the new suspicious activity reporting rule would be required by a date 180 days after the date on which the final regulations discussed in this notice of proposed rulemaking are published in the **Federal Register**.

III. Submission of Comments

FinCEN invites comment on all aspects of the proposed regulation. All comments will be available for public inspection and copying, and no material in any such comments, including the name of any person submitting comments, will be recognized as confidential. Accordingly, material not intended to be disclosed to the public should not be submitted. Comments may be inspected, between 10 a.m. and 4 p.m., in the FinCEN reading room in Washington, DC. Persons wishing to inspect the comments submitted must request an appointment by telephoning (202) 354–6400.

IV. Regulatory Flexibility Act

FinCEN certifies that this proposed regulation would not have a significant economic impact on a substantial number of small entities. Investment companies, regardless of their size, are currently subject to the Bank Secrecy Act. Procedures currently in place at mutual funds to comply with existing Bank Secrecy Act rules should help mutual funds to identify suspicious transactions. In addition, the limited use of currency to purchase mutual fund shares will likely reduce the number of suspicious activity reports required to be filed. Finally, certain small mutual funds may have an established and limited customer base whose transactions are well known to the fund.

V. Executive Order 12866

The Department of the Treasury has determined that this proposed rule is not a significant regulatory action under Executive Order 12866.

VI. Unfunded Mandates Act of 1995 Statement

Section 202 of the Unfunded Mandates Reform Act of 1995, Public Law 104–4 (Unfunded Mandates Act), March 22, 1995, requires that an agency prepare a budgetary impact statement before promulgating a rule that includes a Federal mandate that may result in expenditure by State, local, and tribal governments, in the aggregate, or by the private sector, of $100 million or more in any one year. If a budgetary impact statement is required, section 202 of the Unfunded Mandates Act also requires an agency to identify and consider a reasonable number of regulatory alternatives before promulgating a rule. FinCEN has determined that it is not required to prepare a written statement under section 202 and has concluded that on balance this proposal provides the most cost-effective and least burdensome alternative to achieve the objectives of the rule.

VII. Paperwork Reduction Act

The collection of information contained in this proposed rule is being submitted to the Office of Management and Budget for review in accordance with the Paperwork Reduction Act of 1995 (44 U.S.C. 3507(d)). Comments on the collection of information should be sent (preferably by fax (202–395–6974)) to Desk Officer for the Department of the Treasury, Office of Information and Regulatory Affairs, Office of Management and Budget, Paperwork Reduction Project (1506), Washington, DC 20503 (or by the Internet to *jlackeyj@omb.eop.gov*), with a copy to FinCEN by mail or the Internet at the addresses previously specified. Comments on the collection of information should be received by March 24, 2003. In accordance with the requirements of the Paperwork Reduction Act of 1995, 44 U.S.C. 3506(c)(2)(A), and its implementing regulations, 5 CFR 1320, the following information is presented to assist those persons wishing to comment on the information collection.

FinCEN anticipates that this proposed rule, if adopted as proposed, would result in the annual filing of a total of 3,000 suspicious activity reports by mutual funds. This result is an estimate based on the estimated number of respondents under the rule.

Description of Respondents: Mutual funds as defined in 31 CFR 103.15(a).

Estimated Number of Respondents: 3,000.

Frequency: As required.

Estimate of Burden: The reporting burden of 31 CFR 103.15 will be reflected in the burden of the form used by mutual funds to report suspicious transactions. The recordkeeping burden of 31 CFR 103.15 is estimated as an average of 3 hours per form, which includes internal review of records to determine whether the activity requires reporting.

Estimated Total Annual Recordkeeping Burden: 9,000 hours.

FinCEN specifically invites comments on: (a) Whether the proposed recordkeeping requirement is necessary for the proper performance of the mission of FinCEN, and whether the information shall have practical utility; (b) the accuracy of FinCEN's estimate of the burden of the proposed recordkeeping requirement; (c) ways to enhance the quality, utility, and clarity of the information required to be maintained; (d) ways to minimize the burden of the recordkeeping requirement, including through the use of automated collection techniques or other forms of information technology; and (e) estimates of capital or start-up costs and costs of operation, maintenance, and purchase of services to maintain the information.

In addition the Paperwork Reduction Act of 1995 requires agencies to estimate the total annual cost burden to respondents or recordkeepers resulting from the collection of information. Thus, FinCEN also specifically requests comments to assist with this estimate. In connection with this, FinCEN requests commenters to identify any additional costs associated with the completion of the form. These comments on costs should be divided into two parts: (1) Any additional costs associated with reporting; and (2) any additional costs associated with recordkeeping.

List of Subjects in 31 CFR Part 103

Administrative practice and procedure, Authority delegations (government agencies), Securities, Currency, Investigations, Law enforcement, Reporting and recordkeeping requirements.

Proposed Amendments to the Regulations

1. The authority citation for part 103 continues to read as follows:

Authority: 12 U.S.C. 1829b and 1951–1959; 31 U.S.C. 5311–5314 and 5316–5332; title III, secs. 312, 313, 314, 319, 352, Pub. L. 107–56, 115 Stat. 307.

§ 103.15 [Redesignated as § 103.12]

2. In subpart B, redesignating § 103.15 as § 103.12.

3. In subpart B, add new § 103.15 to read as follows:

§ 103.15 Reports by mutual funds of suspicious transactions.

(a) *General.* (1) Every investment company (as defined in section 3 of the Investment Company Act of 1940 (15 U.S.C. 80a–2) (''Investment Company Act'') that is an open-end company (as defined in section 5 of the Investment Company Act (15 U.S.C. 80a–5)) and that is registered, or is required to register, with the Securities and Exchange Commission pursuant to that Act (for purposes of this section, a ''mutual fund''), shall file with FinCEN, to the extent and in the manner required by this section, a report of any suspicious transaction relevant to a possible violation of law or regulation. A mutual fund may also file with FinCEN a report of any suspicious transaction that it believes is relevant to the possible violation of any law or regulation but whose reporting is not required by this section. Filing a report of a suspicious transaction does not relieve a mutual fund from the responsibility of complying with any other reporting requirements imposed by the Securities and Exchange Commission.

(2) A transaction requires reporting under the terms of this section if it is conducted or attempted by, at, or through a mutual fund, it involves or aggregates funds or other assets of at least $5,000, and the mutual fund knows, suspects, or has reason to suspect that the transaction (or a pattern of transactions of which the transaction is a part):

(i) Involves funds derived from illegal activity or is intended or conducted in order to hide or disguise funds or assets derived from illegal activity (including, without limitation, the ownership, nature, source, location, or control of such funds or assets) as part of a plan to violate or evade any federal law or regulation or to avoid any transaction reporting requirement under federal law or regulation;

(ii) Is designed, whether through structuring or other means, to evade any requirements of this part or any other regulations promulgated under the Bank Secrecy Act, Public Law 91–508, as amended, codified at 12 U.S.C. 1829b, 12 U.S.C. 1951–1959, and 31 U.S.C. 5311–5314, 5316–5332;

(iii) Has no business or apparent lawful purpose or is not the sort in which the particular customer would normally be expected to engage, and the mutual fund knows of no reasonable explanation for the transaction after examining the available facts, including the background and possible purpose of the transaction; or

(iv) Involves use of the mutual fund to facilitate criminal activity.

(3) The obligation to identify and properly and timely to report a suspicious transaction rests with each mutual fund involved in the transaction, provided that no more than one report is required to be filed by the mutual funds involved in a particular transaction or any other person obligated to report the transaction, so long as the report filed contains all relevant facts.

(b) *Filing procedures*—(1) *What to file.* A suspicious transaction shall be reported by completing a Suspicious Activity Report—Investment Companies (''SAR–SF''), and collecting and maintaining supporting documentation as required by paragraph (c) of this section.

(2) *Where to file.* The SAR–SF shall be filed with FinCEN in a central location, to be determined by FinCEN as indicated in the instructions to the SAR–SF.

(3) *When to file.* A SAR–SF shall be filed no later than 30 calendar days after the date of the initial detection by the reporting mutual fund of facts that may constitute a basis for filing a SAR–SF under this section. If no suspect is identified on the date of such initial detection, a mutual fund may delay filing a SAR–SF for an additional 30 calendar days to identify a suspect, but in no case shall reporting be delayed more than 60 calendar days after the date of such initial detection. In situations involving violations that require immediate attention, such as terrorist financing or ongoing money laundering schemes, mutual funds are encouraged to immediately notify by telephone an appropriate law enforcement authority in addition to filing timely a SAR–SF. Mutual funds wishing voluntarily to report suspicious transactions that may relate to terrorist activity may call FinCEN's Financial Institutions Hotline at 1–866–556–3974 in addition to filing timely a SAR–SF if required by this section. The mutual fund may also, but is not required to, contact the Securities and Exchange Commission to report in such situations.

(c) *Retention of records.* A mutual fund shall maintain a copy of any SAR–SF filed and the original (or business record equivalent) of any supporting documentation for a period of five years from the date of filing the SAR–SF. Supporting documentation shall be identified as such and maintained by the mutual fund, and shall be deemed to have been filed with the SAR–SF. The mutual fund shall make all supporting documentation available to FinCEN, any other appropriate law enforcement agencies, or federal or state securities regulators upon request.

(d) *Confidentiality of reports.* No mutual fund, and no director, officer, employee, or agent of any mutual fund, who reports a suspicious transaction under this part, may notify any person involved in the transaction that the transaction has been reported, except to the extent permitted by paragraph (a)(3) of this section. Thus, any person subpoenaed or otherwise required to disclose a SAR–SF or the information contained in a SAR–SF, except where such disclosure is requested by FinCEN, the Securities and Exchange Commission, or another appropriate law enforcement or regulatory agency, shall decline to produce the SAR–SF or to provide any information that would disclose that a SAR–SF has been prepared or filed, citing this paragraph (d) and 31 U.S.C. 5318(g)(2), and shall notify FinCEN of any such request and its response thereto.

(e) *Limitation of liability.* A mutual fund, and any director, trustee, officer, employee, or agent of any mutual fund, who makes a report of any possible violation of law or regulation pursuant to this section or any other authority (whether such report is required or is made voluntarily) shall not be liable to any person under any law or regulation of the United States (or otherwise to the extent also provided in 31 U.S.C. 5318(g)(3)) for any disclosure contained in, or for failure to disclose the fact of, such report.

(f) *Examinations and enforcement.* Compliance with this section shall be examined by the Department of the Treasury, through FinCEN or its delegees, under the terms of the Bank Secrecy Act. Failure to satisfy the requirements of this section may constitute a violation of the reporting rules of the Bank Secrecy Act and of this part.

(g) *Effective date.* This section applies to transactions occurring 180 days after the date on which the final regulations discussed in this notice of proposed rulemaking are published in the **Federal Register**.

Dated: January 14, 2003.

James F. Sloan,

Director, Financial Crimes Enforcement Network.

[FR Doc. 03–1174 Filed 1–17–03; 8:45 am]

BILLING CODE 4810–02–P

ENVIRONMENTAL PROTECTION AGENCY

40 CFR Part 52

[CT–068–7225b; A–1–FRL–7440–9]

Approval and Promulgation of Air Quality Implementation Plans; Connecticut; New Source Review/ Prevention of Significant Deterioration Revision

AGENCY: Environmental Protection Agency (EPA).

ACTION: Proposed rule.

SUMMARY: EPA is proposing to approve State Implementation Plan (SIP) revisions submitted by the Connecticut Department of Environmental Protection (DEP). The revisions include new provisions that implement the core requirements of 1990 Clean Air Act Amendments (CAAA) regarding nonattainment New Source Review (NSR) in areas that have not attained the National Ambient Air Quality Standards (NAAQS). In addition, the changes amend the applicability requirements and certain other requirements of the Prevention of Significant Protection (PSD) program and NSR rules. Finally, the changes provide a definition for ''Practicably Enforceable'' that would allow sources a streamlined approach to limit potential to emit for PSD/NSR applicability purposes. In aggregate, these revisions will substantially strengthen the DEP's air permitting rules.

This action proposes to approve the revisions to section 22a–174–1, ''Definitions,'' section 22a–174–2a, ''Procedural Requirements for New Source Review and Title V Permitting,'' and section 22a–174–3a, ''Permit to Construct and Operate Stationary Sources.'' This action is being taken in accordance with the Clean Air Act (CAA or Act).

DATES: Comments must be received on or before February 11, 2003.

ADDRESSES: Comments may be mailed to Steven A. Rapp, Manager, Air Permits, Toxics and Indoor Programs, Office of Ecosystem Protection (mail code CAP), U.S. Environmental Protection Agency, EPA-New England, 1 Congress Street—Suite 1100, Boston, MA 02114–2023. Copies of the documents relevant to this action are available for public inspection during normal business hours, by appointment at the Office of Ecosystem Protection, U.S. Environmental Protection Agency, Region I, One Congress Street, 11th floor, Boston, MA; Air and Radiation Docket and Information Center, U.S. Environmental Protection Agency, Room B–108 West, 1301 Constitution Avenue, NW., Washington DC and the Bureau of Air Management, Department of Environmental Protection, State Office Building, 79 Elm Street, Hartford, CT 06106–1630.

FOR FURTHER INFORMATION CONTACT: Brendan McCahill, (617) 918–1652; email at *McCahill.Brendan@EPA.GOV*.

SUPPLEMENTARY INFORMATION: On May 23, 1994, the DEP formally submitted revisions to its SIP for the purposes of meeting the 1990 CAAA requirements for nonattainment NSR. Due to various issues with these revisions and the pre-existing state rules, EPA did not take action on this SIP submittal. On June 14, 2002, after completing a top to bottom review of its entire state permitting program, the DEP formally withdrew the May 23, 1994 submittal and submitted new revisions to its SIP.

EPA has recently promulgated revisions to certain portions of the federal PSD and nonattainment NSR regulations (67 FR 80244 (Dec. 31, 2002). These rules have an effective date of March 3, 2003. With respect to Connecticut's rules relating to new source review, EPA has determined that Connecticut's rules meet the requirements of 40 CFR part 51, subpart I, as currently in effect, and is taking no position on whether Connecticut will need to make changes to its new source review rules to meet requirements that EPA has promulgated, but are not yet effective, as part of new source review reform.

The rule revisions proposed for approval today are the product of a comprehensive, multi-year, stakeholder process intended to increase the effectiveness of Connecticut's program. The rules proposed for approval include important flexibility provisions discussed below, including provisions that provide a framework for establishing ''practicably enforceable'' limits on ''potential to emit'' and provisions allow sources to consider decreases in emissions as well as increases in determining applicability. Not only do the rules proposed for approval increase flexibility, but they also enhance the enforceability of the state program. Therefore, EPA believes it is appropriate to propose approval of these rules under the rules that are currently in effect in order to significantly strengthen the state program.

I. Revisions to the Nonattainment NSR Rules

A. What Is Nonattainment NSR?

The CAA requires new major sources and major modifications to existing major sources to obtain an air pollution permit before commencing construction. The nonattainment NSR rules are the set of regulations specifying the minimum permit requirements for new major sources or major modifications in areas that are in nonattainment of the NAAQS. The nonattainment NSR rules include two major elements: (1) Requirements that subjected sources obtain emission reductions (''offsets'') from existing sources to ensure a progression toward achieving the NAAQS and; (2) requirements that sources apply controls that achieve Lowest Achievable Emission Rate (LAER) to ensure emissions are controlled to the greatest degree possible.

B. Why Does Connecticut Need To Revise Its Rules?

In 1990, Congress revised the CAA to include new general requirements that apply to all nonattainment areas and additional requirements that apply to ozone nonattainment areas. In particular, the amended provisions for NSR in ozone nonattainment areas require substantially more stringent applicability and offset requirements over the pre-1990 NSR requirements. All portions of Connecticut are currently designated as nonattainment areas for ozone.

C. Where Can One Locate Additional Information on the General Requirements for Nonattainment NSR?

The air quality planning requirements for nonattainment NSR are set out in part D of subchapter I of the CAA The EPA has issued a ''General Preamble'' describing EPA's preliminary views on how EPA intends to review SIPs and SIP revisions submitted under part D, including those state submittals containing nonattainment area NSR SIP requirements (*see* 57 FR 13498 (April 16, 1992) and 57 FR 18070 (April 28, 1992)). Because this notice describes EPA's interpretations only in broad terms, the reader should refer to the General Preamble for a more detailed discussion of the interpretations of part D advanced in today's proposal and the supporting rationale.

D. How Did Connecticut Satisfy the General NSR Requirements?

The general nonattainment NSR requirements are found in sections 172 and 173 of part D of subchapter I of the

Act and must be met by all nonattainment areas. The following paragraphs reference the nonattainment NSR requirements required to be submitted to EPA by November 15, 1992 and explain how Connecticut's rules meet those requirements. Connecticut's existing SIP already contained some of these provisions while others are being proposed for approval today.

1. Section 22a–174–3a(l)(5)(D), establishes provisions in accordance with section 173(a)(1)(A) of the CAA to assure that calculations of emissions offsets are based on the same emissions baseline used in the demonstration of Reasonable Further Progress (RFP).

2. Section 22a–174–3a(l)(4)(B)(viii) establishes provisions in accordance with section 173(c)(1) of the CAA to allow offsets to be obtained in another nonattainment area if: (i) The area has an equal or higher nonattainment classification and, (ii) emissions from the other nonattainment area contribute to an NAAQS violation in the area in which the source would construct.

3. Section 22a–174–3a(l)(4)(B)(i)&(iii), establishes provisions in accordance with sections 173(a) and 173 (c)(1) of the CAA that any emissions offsets obtained in conjunction with the issuance of a license to a new or modified source shall be federally enforceable before permit issuance and must be in effect and enforceable by the time the new or modified source commences operation.

4. Sections 22a–174–1(26), ''CERC,'' 22a–174–3a(l)(4)(B)(ii) &, 22a–174–3a(l)(5), establish provisions in accordance with section 173(c)(1) of the CAA to assure that emission increases from new or modified sources are offset by real reductions in actual emissions.

5. Sections 22a–174–1(26), ''CERC,'' 22a–174–3a(l)(4)(B)(ii) &, 22a–174–3a(l)(5) establishes provisions in accordance with section 173(c)(2) of the CAA to prevent emissions reductions otherwise required by the Act from being credited for purposes of satisfying part D offset requirements.

6. The 1990 CAAA modified the Act's provisions on growth allowances in nonattainment areas by (1) Eliminating existing growth allowances in the nonattainment area that received a notice prior or subsequent to the Amendments that the SIP was substantially inadequate, and (2) restricting growth allowances to only those portions of nonattainment areas formally targeted as special zones for economic growth (Sections 173(b) and 173(a)(1)(B) of the CAA). Connecticut's regulations do not contain provisions for growth allowances and are consequently consistent with the Act.

7. Connecticut has a practice of supplying information from nonattainment NSR licenses to EPA's RACT/BACT/LAER clearinghouse in accordance with section 173(d) of the CAA.

8. Section 22a–174–3a(l)(6) establishes provisions, in accordance with section 173(a)(3) of the CAA, to ensure that owners or operators of each proposed new or modified major stationary source demonstrate, as a condition of license issuance, that all other major stationary sources under the same ownership in the State are in compliance with the CAA.

9. Section 22a–174–3a(l)(2) establishes provisions in accordance with section 173(a)(5) of the CAA that, as a prerequisite to issuing any Part D permit, require an analysis of alternative sites, sizes, production processes and environmental control techniques for proposed sources that demonstrate that the benefits of the proposed source significantly outweigh the environmental and social costs imposed as a result of its location, construction, and modification.

10. Section 22a–174–3a(l)(8)(A) establishes provisions in accordance with section 173(a)(4) of the CAA that, as a prerequisite to issuing any Part D permit, the Administrator has not determined that the applicable implementation plan is not being adequately implemented for the proposed nonattainment area in which the proposed source is to construct or be modified.

E. What Are the Requirements for NSR in Ozone Nonattainment Areas?

As mentioned, the general nonattainment NSR requirements found in sections 172 and 173 of part D of subchapter I of the Act must be met by all nonattainment areas. The requirements for ozone nonattainment areas that supplement or supersede these requirements are found in subpart 2 of part D. In addition to requirements for ozone nonattainment areas, subpart 2 includes section 182(f), which states that requirements for major stationary sources of VOC shall apply to major stationary sources of oxides of nitrogen (NO_X) unless the Administrator makes certain determinations related to the benefits or contribution of NO_X control to air quality, ozone attainment, or ozone air quality. States were required under section 182(a)(2)(C) to adopt new NSR rules for ozone nonattainment areas by November 15, 1992.

F. How Did Connecticut Comply With the Subpart 2 Requirements?

Pursuant to section 172(c)(5) of the CAA, State implementation plans must require permits for the construction and operation of new or modified major stationary sources in nonattainment areas. The federal statutory permit requirements for ozone nonattainment areas are generally contained in revised section 173, and in subpart 2 of subchapter I, part D of the CAA. These are the minimum requirements that States must include in an approvable implementation plan. For all classifications of ozone nonattainment areas, States must adopt the appropriate major source thresholds and offset ratios, and must adopt provisions to ensure that any new or modified major stationary source of NO_X satisfies the requirements applicable to any major source of VOC, unless a special NO_X exemption is granted by the Administrator under the provision of section 182(f).

Connecticut was required to meet the subpart 2 requirements because all portions of the state are designated as in nonattainment for ozone. Most of Connecticut is designated as in ''serious'' nonattainment, except for southwest Connecticut, which is designated as in ''severe'' nonattainment. The following paragraphs reference the serious and severe ozone nonattainment requirements that Connecticut was required to submit to EPA by November 15, 1992 and how Connecticut has met those requirements.

1. Section 22a–174–1(57) ''Major Stationary Source,'' establishes provisions in accordance with the serious nonattainment area requirements provided in sections 182(c) and 182(f) of the CAA, by setting a major source threshold level of 50 TPY for VOC and for NO_X.

2. Section 22a–174–1(57) ''Major Stationary Source,'' establishes provisions in accordance with the severe nonattainment area requirements provided in sections 182(d) and 182(f) of the CAA, by setting a major source threshold level of 25 TPY for VOC and for NO_X.

3. Section 22a–174–1 (55) ''Major Modification,'' establishes provisions in accordance with the serious and severe nonattainment area requirements provided in sections 182(c)(6) and 182(d) of the CAA, by setting a major modification threshold level of 25 TPY for VOC and for NO_X.

4. Section 22a–174–3a(l)(4)(B)(x) establishes provisions in accordance with the serious nonattainment areas

provided in sections 183(c)(10) and 182(f) of the CAA, by setting an offset ratio of 1.2 to 1 for major sources or major modifications of VOC or NO_X.

5. Section 22a–174–3a(l)(4)(B)(x) establishes provisions in accordance with the severe nonattainment areas provided in sections 183(d)(2) and 182(f) of the CAA, by setting an offset ratio of 1.3 to 1 for major sources or major modifications of VOC or NO_X.

6. Connecticut's regulations do not include provisions that apply EPA's special rules for modifications as defined in sections 182(c)(7) and (8) of the CAA. The special rules for modifications are optional, less stringent applicability/permitting requirements that apply to a small number of modifications in serious and severe nonattainment areas. By not including provisions for section 182(c)(7) and (8), DEP's rules are more stringent than the CAA. Since the DEP rules only allows the most stringent applicability/permitting option, its SIP meets the federal requirements.

G. What Provisions of the 1990 CAAA Has Connecticut Not Properly Addressed?

For serious and severe ozone nonattainment areas, State plans must implement section 182(c)(6) with regard to modifications of major sources. Commonly referred to as the *de minimis* rule, the provision requires state permitting authorities to submit rules that require sources to consider all contemporaneous emission changes occurring within the last five calender years of a physical change when determining if the change is major modification.

As noted above, Connecticut contains serious and severe nonattainment areas and therefore must implement the de-minimis rule. However, the DEP's SIP submittal is not clear regarding implementation of this rule. The rule only requires sources to keep records of de-minimis emission increases but does not explain how these emissions will be used to define a major modification. As a result, the DEP's NSR rules do not completely satisfy the requirements of the CAA. Since this submittal includes the remaining NSR requirements of the CAA and substantially strengthens the DEP's SIP, EPA is proposing to approve as a SIP strengthening measure all portions of the submittal except for the provisions for the de-minimis rule. EPA intends to work with DEP to develop an approvable de-minimis provision in the future.

II. Revisions to the Major Modification Applicability Requirements for the PSD Program and Nonattainment NSR Rules

A. How Does EPA Define a Major Modification Under Its Rules That Are in Effect?

EPA defines a major modification as a physical change or a change in the method of operation of a major stationary source that results in a significant net emissions increase. EPA's definition for net emission increase consists of two additive components: (a) Any increase in actual emissions from a particular physical change or change in method of operation and; (b) any other increase or decrease in actual emissions at the source that are contemporaneous with the particular change and are creditable. If the resultant net emissions increase is greater than the significance level for any Title I regulated pollutant, the physical change is a major modification and subject to PSD/NSR requirements.

The first component of net emission increase narrowly includes only the emission increase associated with a particular change at the source. When calculating the emission increase, EPA's rules in effect generally employ what is commonly called the actual-to-potential test (special provisions in effect for electric utility steam generating units are discussed below). The maximum potential emissions from a modified emission unit after the modification is compared to the actual emissions from the emission unit before the modification. The difference between the unit's potential emissions and its current actual emissions is the actual emission increase from the modification.

The second component allows sources to broadly include changes in actual emissions that have occurred anywhere at the source within the contemporaneous period, typically defined by state rules as five years from the time of the modification under review. It provides sources the opportunity to avoid major PSD/NSR applicability by giving a source credit for reducing emissions at other emission units located anywhere at its facility. If the actual emission increase from the modification under review combined with emission decreases source-wide are below significance level for any given regulated pollutant, the modification is not major and not subject to PSD/NSR. When employing component two, federal rules also require sources to include any creditable emission increases occurring source-wide when calculating the net emission increase.

B. Why Is Connecticut Changing Its Rules?

The DEP's existing SIP-approved rules use a different approach for calculating the emission increase from a modification. Instead of the actual-to-potential test, the DEP uses the potential-to-potential test. This method compares the emission units potential before the modification with its potential after the modification. The DEP also does not allow sources the option to take credit for emission changes occurring source-wide. Adopting provisions that reflect the EPA rules that are currently in effect significantly improves Connecticut's program.

C. How Does Connecticut's Submittal Meet the Federal Requirements?

EPA's ''actual to potential'' applicability test and ''net emissions increase'' requirements for PSD/NSR applicability are established in the federal definitions for ''Actual emissions,'' ''Potential emissions,'' ''Net emission increase,'' and ''Significant emissions.'' In section 22a–174–1, the DEP is adopting with minor revisions the definitions for ''Actual emissions,'' ''Net emission increase,'' and ''Significant emissions'' located in 40 CFR 51.165 and 51.166. In addition, the DEP is adopting a definition of ''Potential emissions'' that requires sources to effectively limit PTE using either federally or practicably enforceable limits. With these definitions, the DEP's PSD/NSR applicability requirements are consistent with existing federal requirements.

EPA notes that federal applicability requirements also provide a separate applicability method for sources defined as electric steam utility generators. For this source category, EPA regulation applies an actual-to-representative actual emissions test. A sources current actual emissions are compared to the source's predicted future actual emissions to determine the emission increase from a modification.

The provisions for this applicability test, referred to as the WEPCO applicability test, were added to the federal NSR regulations following the Seventh Circuit Court of Appeals decision in 1990 ((*Wisconsin Electric Power Company (WEPCO)* v. *Reilly*)). These provisions include definitions for ''electric steam utility generator'' and ''representitive actual annual emissions.'' While these definitions are referred to in the DEP's new definition of actual emissions, the DEP did not explicitly define these two terms.

However, the DEP's interpretation of state law provides it the authority to implement all provisions of the federal ''actual emissions'' definition that is incorporated by reference into its rules. This authority extends to the definitions for ''Electric steam utility generator'' and ''Representative actual annual emissions'' that are referenced in the federal definition but not explicitly defined in the state rule. Consequently, the DEP's rules comply with all provisions of the federal definition for ''actual emissions'' including the provisions for the WEPCO applicability test.

III. Revisions That Make Various Definitions Used in the State's Nonattainment NSR Rules and PSD Program Consistent With Federal Definitions

A. What Definitions Is the DEP Adding or Revising?

The DEP is adding or revising definitions to clarify general requirements of its permitting rules and to make the rules consistent with the federal permitting requirements. The list of new or revised definitions includes: Allowable Emissions; Baseline concentration; Begin Actual Construction; Commence construction; Construction; Emission limitation and emission standard; Emissions Unit; Excessive concentration; Federally enforceable; Good engineering practice; Innovative control technology, Malfunction; Secondary emissions; and Volatile organic compound.

Several definitions and other terms in Connecticut's rules reference EPA's NSR and PSD rules in the Code of Federal Regulations (CFR). Under Connecticut law, when the reference is to a CFR section ''as amended from time to time,'' the reference is intended to incorporate amendments to the CFR made subsequent to state publicly noticing its proposal to adopt these rules. When the reference is simply to the CFR, it is to the EPA rules in effect as of July 17, 2001, which is the date DEP publicly noticed the proposed rule amendments.

B. How Will These Definitions Affect Permitting in Connecticut?

The DEP's decision to incorporate the federal permitting program definitions under 40 CFR 51.100–166 will ensure the DEP's permit procedures and permit decisions will be consistent with federal requirements. In addition, EPA policies and guidance will be directly applicable to the DEP's rules ensuring more consistent program implementation and improved program compliance.

For further details concerning the revisions to Connecticut's SIP and EPA's analysis, please refer to the memorandum from Brendan McCahill, Environmental Engineer, to Steven Rapp, Manager, Air Permits Program entitled, ''Technical Support Document—Connecticut New Source Review/Prevention of Significant Deterioration Program Revisions,'' dated January 10, 2003, available upon request from the EPA regional office noted in the **ADDRESSES** section of this document.

IV. Proposal To Approve Revisions To Allow Sources To Limit Potential To Emit (PTE) Through Practicably Enforceable Limitations

A. Why Is PTE Important?

As explained in section II, the emissions increase from a modification is the difference between an emission unit's PTE after the modification and its actual emissions before the modification. Therefore, the rules governing how PTE limits are created and enforced is critically important in any PSD/NSR applicability determination. EPA defines ''potential to emit'' as the maximum capacity of a stationary source to emit a pollutant under its physical and operational design. Absent an inherent physical or operational restriction, EPA calculates PTE assuming the source operating full time (*i.e.*, 8760 hours/year) at its maximum emission rate. Federal rules allow sources to overcome this assumption by accepting physical or operation restrictions that limit PTE. Typically, sources accept PTE limits to reduce the net emission increase from a modification and avoid NSR applicability. For example, a source may accept a restriction on hours of operation (*e.g.*, 4000 hours/year) if the restriction results in a PTE that reduces the net emission increase calculation to below the NSR/PSD applicability threshold levels.

Up to 1995, EPA's NSR and PSD rules required limits on PTE to be federally enforceable. The term ''federally enforceable'' incorporates two fundamental elements. First, EPA must have direct right to enforce restrictions and limitations. Second, limits must be enforceable as a practicable manner or ''practicably enforceable.'' EPA has issued several guidance documents explaining the requirements of practicably enforceable. In brief, EPA has interpreted ''practicably enforceable'' to mean that sufficient monitoring, recordkeeping and reporting exists such that the source and/or permitting authority can show continual compliance with the emission limitation.

EPA's requirement that a PTE limitation that keeps a source out of a CAA requirement must be federally enforceable was legally challenged by industry. In *Chemical Manufacturer's Association* V. *EPA,* No. 89–1514 (D.C. Cir. Sept. 15 1995), the court vacated the EPA's requirements that physical or operational restrictions on a source's PTE be federally enforceable. As a result, states may develop and submit for EPA approval NSR/PSD programs under 40 CFR 51.165/51.166 that include provisions for state-enforceable PTE limits provided that the provisions are practicably enforceable and effectively limit the source's emissions.

B. What Are Connecticut's Provisions Regarding PTE?

The DEP's new definition of ''practicably enforceable'' will allow sources the option of taking either federally enforceable or practicably enforceable PTE limits. In developing this definition, the DEP closely followed EPA's guidance on practicably enforceable limitations in a January 25, 1995 memorandum from John Sietz, director of the Office of Air Quality Planning and Standards entitled ''Options for Limiting the Potential to Emit of a Stationary Source Under Section 112 and title V of the Clean Air Act.'' The policy specifies the following minimum elements required for a practicably enforceable limitation: (1) A technically accurate limitation and identifying the portions of the source subject to the limitation; (2) the time period for the limitation and; (3) the method to determine compliance including appropriate monitoring, recordkeeping and reporting. The DEP worked closely with EPA to ensure its definition followed EPA guidance on practicably enforceable limits and included these three minimum requirements. As a result, in the absence of any federal rules reimposing mandated federally enforceable PTE limits, EPA proposes to approve the DEP's ''practicably enforceable'' definition.

V. Proposed Action

EPA is proposing to approve the SIP revision submitted by Connecticut on June 14, 2002.

EPA is soliciting public comments on the issues discussed in this proposal or on other relevant matters. These comments will be considered before EPA takes final action. Interested parties may participate in the Federal rulemaking procedure by submitting written comments to the EPA New

England Regional Office listed in the **ADDRESSES** section of this action. Comments must be received on or before February 11, 2003. Comments received after this date will be considered late. EPA is not required to consider late comments.

VI. Regulatory Assessment Requirements

Under Executive Order 12866 (58 FR 51735, October 4, 1993), this action is not a ''significant regulatory action'' and therefore is not subject to review by the Office of Management and Budget. For this reason, this action is also not subject to Executive Order 13211, ''Actions Concerning Regulations That Significantly Affect Energy Supply, Distribution, or Use'' (66 FR 28355, May 22, 2001). This action merely approves state law as meeting Federal requirements and imposes no additional requirements beyond those imposed by state law. Accordingly, the Administrator certifies that this rule will not have a significant economic impact on a substantial number of small entities under the Regulatory Flexibility Act (5 U.S.C. 601 *et seq.*). Because this rule approves pre-existing requirements under state law and does not impose any additional enforceable duty beyond that required by state law, it does not contain any unfunded mandate or significantly or uniquely affect small governments, as described in the Unfunded Mandates Reform Act of 1995 (Pub. L. 104–4).

This rule also does not have tribal implications because it will not have a substantial direct effect on one or more Indian tribes, on the relationship between the Federal Government and Indian tribes, or on the distribution of power and responsibilities between the Federal Government and Indian tribes, as specified by Executive Order 13175 (65 FR 67249, November 9, 2000). This action also does not have Federalism implications because it does not have substantial direct effects on the States, on the relationship between the national government and the States, or on the distribution of power and responsibilities among the various levels of government, as specified in Executive Order 13132 (64 FR 43255, August 10, 1999), because it merely approves a state rule implementing a federal standard, and does not alter the relationship or the distribution of power and responsibilities established in the Clean Air Act. This rule also is not subject to Executive Order 13045 ''Protection of Children from Environmental Health Risks and Safety Risks'' (62 FR 19885, April 23, 1997), because it is not economically significant.

In reviewing SIP submissions, EPA's role is to approve state choices, provided that they meet the criteria of the Clean Air Act. In this context, in the absence of a prior existing requirement for the State to use voluntary consensus standards (VCS), EPA has no authority to disapprove a SIP submission for failure to use VCS. It would thus be inconsistent with applicable law for EPA, when it reviews a SIP submission, to use VCS in place of a SIP submission that otherwise satisfies the provisions of the Clean Air Act. Thus, the requirements of section 12(d) of the National Technology Transfer and Advancement Act of 1995 (15 U.S.C. 272 note) do not apply. This rule does not impose an information collection burden under the provisions of the Paperwork Reduction Act of 1995 (44 U.S.C. 3501 *et seq.*)

List of Subjects in 40 CFR Part 52

Environmental protection, Air pollution control, Carbon monoxide, Intergovernmental relations, Lead, Nitrogen dioxide, Ozone, Particulate matter, Reporting and recordkeeping requirements, Sulfur oxides, Volatile organic compounds.

Dated: January 10, 2003.

Robert W. Varney,

Regional Administrator, EPA New England.

[FR Doc. 03–1239 Filed 1–17–03; 8:45 am]

BILLING CODE 6560–50–P

ENVIRONMENTAL PROTECTION AGENCY

40 CFR Part 300

[FRL–7440–1]

National Oil and Hazardous Substances Pollution Contingency Plan; National Priorities List

AGENCY: Environmental Protection Agency.

ACTION: Notice of intent to delete a portion of the Former Nansemond Ordnance Depot Site from the National Priorities List.

SUMMARY: The U.S. Environmental Protection Agency (EPA) Region III announces its intent to delete soil in the Impregnation Kit Area of the Former Nansemond Ordnance Depot site (Nansemond) from the National Priorities List (NPL) and requests public comment on this action. The NPL constitutes appendix B to the National Oil and Hazardous Substances Pollution Contingency Plan (NCP), 40 CFR part 300, which EPA promulgated pursuant to section 105 of the Comprehensive Environmental Response, Compensation and Liability Act (CERCLA). EPA and the Commonwealth of Virginia (Commonwealth), acting through the Department of Environmental Quality, have determined that all appropriate CERCLA response actions have been implemented for the soil and that no further action for soil is appropriate. This partial deletion pertains only to the soil in the Impregnation Kit Area and does not include the ground water beneath the Impregnation Kit Area, nor any other portion of Nansemond.

DATES: EPA will accept comments concerning its proposal for partial deletion until February 20, 2003, and publication of a notice of availability of this document in a newspaper of record.

ADDRESSES: Comments may be submitted to Mr. Robert Thomson, PE, Remedial Project Manager, U.S. EPA, Region III (3HS13), 1650 Arch Street, Philadelphia, Pennsylvania 19103–2029, Telephone: (215) 814–3357, e-mail *thomson.bob@epa.gov.*

Information Repositories: Comprehensive information on the Nansemond site, information specific to this proposed partial deletion, the Administrative Record and the Deletion Docket for this partial deletion are available for review at the following Nansemond document/information repositories:

Tidewater Community College (Frederick Campus) Library, Information Desk, 7000 College Drive, Portsmouth, Virginia 23703, (757) 822–2130, Hours of Operation: Monday through Thursday 8 a.m. to 9 p.m., Friday 8 a.m. to 4:30 p.m. and Saturday 9 a.m. to 1 p.m.

U.S. EPA Region III Library, 1650 Arch Street, Philadelphia, PA 19103–2029, (215) 814–5254, Hours of Operation: Monday through Friday 8 a.m.–5 p.m.

FOR FURTHER INFORMATION CONTACT: Mr. Robert Thomson, PE, Remedial Project Manager, U.S. EPA Region III (3HS13), 1650 Arch Street, Philadelphia, PA 19103–2029, (215) 814–3357, e-mail *thomson.bob@epa.gov.*

SUPPLEMENTARY INFORMATION:

Table of Contents

I. Introduction
II. NPL Deletion Criteria
III. Deletion Procedures
IV. Basis for Intended Partial Site Deletion

I. Introduction

The United States Environmental Protection Agency (EPA) Region III announces its intent to delete a portion of the Former Nansemond Ordnance Depot site (Nansemond) located in

Suffolk, Virginia from the National Priorities List (NPL) and requests comments on this proposal. The NPL constitutes appendix B of the National Oil and Hazardous Substances Pollution Contingency Plan (NCP), 40 CFR part 300. This proposal for partial deletion pertains to the soil in the Impregnation Kit Area of Nansemond.

Nansemond is located in Suffolk, Virginia, near the northwestern end of State Route 135. It was once a U.S. military facility. It is situated at the mouth of and to the east of the Nansemond River, on the south side of Hampton Roads, and contains approximately 975 acres. It is bordered to the west by the Nansemond River, to the north by the James River (Hampton Roads) and to the east by Streeter Creek.

The Impregnation Kit Area (also known as the ''Impregnite Kit'' or ''XXCC3'' area) is an approximately 300,000 square foot, rectangular area in the southwestern portion of Nansemond, about 1000 feet from the Nansemond River. Only soil in this area is proposed for deletion from the NPL; ground water beneath the Impregnation Kit Area is not proposed for deletion.

The U.S. Department of the Army apparently disposed of ''impregnation'' or ''impregnite'' kits in this area. Impregnation kits consist of two substances: (a) XXCC3, which is a fine, white, granular, crystal powder consisting of 90–92% octachlor carbonilide ($C_{13}H_4Cl_8N_2O$) and 8–10% zinc oxide, and (b) a ''honey-like syrup'' or ''black waxy material.'' XXCC3 was used to neutralize chemical agents, and the impregnation kits disposed of in the Impregnation Kit Area were probably used as a protective coating on an under garment for older military issue chemical suits. EPA found several hazardous substances in the soil of the Impregnation Kit Area at concentrations greater than background concentrations, including zinc (11,100 milligrams per kilogram), carbon tetrachloride (20,700 micrograms per kilogram (ug/kg)), chloroform (20,600 ug/kg), and TNT (279 ug/kg).

A contractor for the United States Army Corps of Engineers (the Corps) removed the buried kits and surrounding contaminated soil in December 1998 and January 1999. In all, the contractor removed 857 tons of impregnation kits and associated soil. Confirmation sampling shows that the contractor successfully removed the impregnation kits and associated contaminated soil. In the process, the Corps and EPA found that disposal activities and associated soil contamination were limited to a circle approximately 270 feet in diameter, covering 57,255 square feet, rather than 300,000 square feet, as originally estimated in EPA's Final Hazard Ranking System (''HRS'') Package. No further response action is appropriate to protect human health, welfare, and the environment in relation to the soil in the Impregnation Kit Area (all 300,000 square feet) and, therefore, EPA proposes to delete the soil in this area from the NPL.

Ground water beneath the Impregnation Kit Area has not been fully characterized and is not proposed for deletion from the NPL. Although some sampling and evaluation has been completed, more study is needed to better understand whether the ground water is contaminated and, if so, to what extent. Hazardous substances, including explosives, have been detected in ground water at other locations within Nansemond. It has not been clearly demonstrated that hazardous substances, pollutants or contaminants have been, or continue to be, released into the ground water beneath the Impregnation Kit Area at levels of concern to human health or the environment. Data gathered so far do not appear to indicate unacceptable human health threats from ground water beneath the Impregnation Kit Area, except perhaps if used for drinking water. Accordingly, the present owner of the property has agreed to prohibit drinking of ground water beneath the Impregnation Kit Area through a restrictive covenant, or similar legal device, in a deed. In addition, a City of Suffolk ordinance, section 90–126, requires all new premises, buildings or dwellings abutting a city water main to connect to the water main. This means that, under current law, any new buildings on the Impregnation Kit Area would connect to the city water main, reducing the likelihood that people would choose to drill wells and use ground water beneath the Impregnation Kit Area. The EPA and Corps plan future investigations to determine whether the ground water beneath the Impregnation Kit Area, and other areas within Nansemond, poses a risk to human health or the environment.

II. NPL Deletion Criteria

This partial deletion is proposed in accordance with 40 CFR 300.425(e) and the Notice of Policy Change: Partial Deletion of Sites Listed on the National Priorities List, 60 FR 55466 (November 1, 1995). The NCP establishes the criteria that EPA uses to delete sites from the NPL. In accordance with 40 CFR 300.425(e), sites may be deleted from the NPL where no further response is appropriate to protect public health or the environment. In making such a determination pursuant to § 300.425(e), EPA will consider, in consultation with the Commonwealth, whether any of the following criteria have been met:

- Section 300.425(e)(1)(i). Responsible parties or other persons have implemented all appropriate response actions required; or
- Section 300.425(e)(1)(ii). All appropriate responses under CERCLA have been implemented, and no further response action by responsible parties is appropriate; or
- Section 300.425(e)(1)(iii). The remedial investigation has shown that the release poses no significant threat to public health or the environment and, therefore, taking of remedial measures is not appropriate.

Deletion of a portion of a site from the NPL does not preclude eligibility for subsequent CERCLA actions at the area deleted if future site conditions warrant such actions. Section 300.425(e)(3) of the NCP provides that CERCLA actions may be taken at sites that have been deleted from the NPL. A partial deletion of a site from the NPL does not affect or impede EPA's ability to conduct CERCLA response activities at areas not deleted and remaining on the NPL. In addition, deletion of a portion of a site from the NPL does not affect the liability of responsible parties or impede agency efforts to recover costs associated with response efforts.

III. Deletion Procedures

Deletion of a portion of a site from the NPL does not itself create, alter, or revoke a person's rights or obligations. The NPL is designed primarily for informational purposes and to assist agency management. The following procedures were used for the proposed deletion of the soil in the Impregnation Kit Area at Nansemond:

1. In December 1998 and January 1999, a contractor for the U.S. Army Corps of Engineers removed impregnation kits and associated contaminated soil from the Impregnation Kit Area. Subsequent soil sampling confirmed that the kits and contaminated soil had been successfully removed. Residual concentrations of hazardous substances, pollutants and contaminants in the soil are less than EPA Region III's Risk-Based Concentrations for soil in residential use and less than concentrations that might contaminate ground water, with the exception of arsenic. The arsenic concentrations, however, are within the range of concentrations that occurs naturally in the soil in this region of Virginia. A geophysical investigation of the Impregnation Kit Area and 20

adjacent acres found no ordnance, no explosives and only one piece of ordnance-related scrap. Based on this, EPA and the Corps believe that no further response action is appropriate for soil in the Impregnation Kit Area.

2. EPA has recommended the partial deletion and the Corps and EPA have prepared the relevant documents. These documents have been compiled into a Deletion Docket.

3. The Commonwealth of Virginia, through the Virginia Department of Environmental Quality, concurs with this partial deletion.

4. Concurrent with this national notice of intent for partial deletion, a notice has been published in a local newspaper of record and has been distributed to appropriate Federal, State, and local officials, and other interested parties. These notices announce a 30 day public comment period on the deletion package, which commences on the date of publication of this notice in the **Federal Register** and publication of a notice of availability of this notice in a newspaper of record.

5. EPA and the Corps have made all relevant documents available at the information repositories listed previously.

This **Federal Register** document, and a concurrent notice in a newspaper of record, announce the initiation of a 30 day public comment period and the availability of the notice of intent for partial deletion. The public is asked to comment on EPA's proposal to delete the soil in the Impregnation Kit Area of Nansemond from the NPL. All critical documents needed to evaluate EPA's decision are included in the Deletion Docket and are available for review at the information repositories.

Upon completion of the 30 day comment period, EPA will evaluate all comments received before issuing the final decision on the partial deletion. EPA will prepare a Responsiveness Summary for comments received during the public comment period and will address concerns presented in the comments. The Responsiveness Summary will be made available to the public at the information repositories listed previously. Members of the public are encouraged to contact EPA Region III to obtain a copy of the Responsiveness Summary. If, after review of all public comments, EPA determines that the partial deletion from the NPL is appropriate, EPA will publish a final notice of partial deletion in the **Federal Register**. Deletion of the area does not actually occur until the final Notice of Partial Deletion is published in the **Federal Register**.

IV. Basis for Intended Partial Site Deletion

The following provides EPA's rationale for deletion of the soil in the Impregnation Kit Area from the NPL and EPA's finding that the criteria in 40 CFR 300.425(e) are satisfied.

Background

The Former Nansemond Ordnance Depot site (Nansemond) is located in Suffolk, Virginia, near the northwestern end of State Route 135. It was once a U.S. military facility. It is situated at the mouth of and to the east of the Nansemond River, on the south side of Hampton Roads, and contains approximately 975 acres. It is bordered to the west by the Nansemond River, to the north by the James River (Hampton Roads) and to the east by Streeter Creek.

From its establishment in 1917 until 1950, Nansemond was occupied by the U.S. Army for ammunition supply, maintenance, and disposal functions. In 1950, the site was transferred to the Department of the Navy, and was subsequently named the Marine Corps Supply Forwarding Annex. Following Navy operation, Nansemond was deactivated in 1960, and ownership of the property was transferred to the Beazley Foundation. The land of the former depot is now principally occupied by Tidewater Community College; the General Electric Company Jet Engine Division (GE); and the Hampton Roads Sanitation District (HRSD). Smaller parcels of land are owned by the Virginia Department of Transportation, Interstate 664; Dominion Lands, Inc.; Continental Properties; and SYSCO Food Services.

Soil and ground water at Nansemond have been contaminated by past operations, including the storage, handling, reconditioning and disposal of ordnance. Types of contamination at Nansemond include, but are not limited to, semi-volatile organic compounds, heavy metals and compounds used in explosives (*e.g.*, TNT) in soil; and compounds used in explosives (*e.g.*, hexahydro-1,3,5-trinitro-1,3,5-triazine (''RDX'')) in ground water.

Nansemond is classified as a ''Formerly Used Defense Site'' or ''FUDS.'' Pursuant to Public Law 98–212 and the Defense Environmental Restoration Program (chapter 160 of the Superfund Amendments and Reauthorization Act of 1986), the Department of Defense (DOD) is responsible for investigating and remedying releases of hazardous substances at FUDS that resulted from DOD activities. DOD has assigned those responsibilities to the United States Army Corps of Engineers (the Corps).

Environmental contamination from past military operations at Nansemond came to the attention of the Corps and EPA at least as early as 1987, when a boy found a piece of crystalline TNT near the entrance to Tidewater Community College. Beginning in 1987 and continuing to the present, the Corps and EPA have cooperated to remove TNT, buried ordnance and other contamination from soil at Nansemond. In addition, the Corps and EPA have cooperated in investigating soil and ground water contamination at Nansemond.

Impregnation Kit Area

The Impregnation Kit Area (also known as the Impregnite Kit or XXCC3 area) is an approximately 300,000 square foot, rectangular area in the southwestern portion of Nansemond, about 1000 feet from the Nansemond River. It was apparently used for the disposal of impregnation kits containing XXCC3. Impregnation kits consist of two substances: (a) XXCC3, which is a fine, white, granular, crystal powder, and (b) a ''honey-like syrup'' or ''black waxy material.'' XXCC3 was used to neutralize chemical agents, and the impregnation kits disposed of in this area were probably used as a protective coating on an under garment for older military issue chemical suits.

As of 1948, the U.S. Army's recommended methods for disposal of surplus XXCC3 included scattering on the ground, burial (at least three feet below ground), and burning. Aerial photographs indicate that activities such as excavating and grading took place at the Impregnation Kit Area during the 1950s. A 1995 excavation by a contractor for Dominion Lands, Inc. uncovered wooden crates containing the white powder; small metal cans containing the black waxy material; and fiber drums. In 1996, the Corps conducted a chemical screening and ordnance survey in the Impregnation Kit Area, took soil samples and dug test pits. The test pits revealed a thick seam of the white powder in a mounded area, and remnants of the kits were visible.

EPA took a soil sample from the Impregnation Kit Area in 1997. The hazardous substances detected at the highest concentrations in this sample were zinc (11,100 milligrams per kilogram), carbon tetrachloride (20,700 micrograms per kilogram (μg/kg)), chloroform (20,600 μg/kg), and TNT (279 μg/kg).

In December 1998 and January 1999, a contractor for the Corps excavated the area containing the impregnation kits.

Two parallel disposal trenches were discovered. A total of 857 tons of impregnation kit materials and associated soils were removed and placed in a landfill in Hampton, Virginia. Earlier analytical testing indicated that the soils and materials removed from the Impregnation Kit Area were not a RCRA hazardous waste according to 40 CFR part 261.3 and the Material Safety Data Sheet for XXCC3. All waste was disposed of in a non-hazardous waste landfill in Hampton, Virginia.

Following the removal, in January 1999, EPA proposed to add releases of hazardous substances, pollutants and contaminants at Nansemond to the National Priorities List (NPL). 64 FR 2950 (January 19, 1999). EPA added the releases to the NPL in July 1999. 64 FR 39878 (July 22, 1999). One of the supporting documents, the Hazard Ranking System (HRS) Documentation Record, described the Impregnation Kit Area as one of seven sources of contamination at Nansemond, based on the soil sample taken in 1997. EPA also noted, however, that ''The rectangular parcel, identified as Source Area 3 [the Impregnation Kit Area] in the HRS Documentation Record, has undergone extensive removal activities and EPA anticipates that confirmation sampling will indicate that this area also is not of concern to EPA.'' At the time it drafted the HRS Documentation Record, EPA estimated the Impregnation Kit Area covered approximately 300,000 square feet.

In the summer of 1999, a contractor for the Corps took samples of the soil in the Impregnation Kit Area to confirm that the excavation had successfully removed contaminated soil and to check for hazardous substances, pollutants and contaminants in 20 acres surrounding the excavation. The contractor also performed a geophysical investigation to identify geophysical anomalies that might indicate ordnance buried in the Impregnation Kit Area.

The Confirmation Sampling Report shows that the excavation successfully removed the impregnation kits and associated contaminated soil. Residual concentrations of hazardous substances, pollutants and contaminants in soil samples were less than EPA Region III's Risk-Based Concentrations for residential use, and less than concentrations that might contaminate ground water, except that all the soil samples contained arsenic, at levels up to 4.6 mg/kg. These arsenic concentrations, however, are within the range of naturally occurring background concentrations for soils in this region of Virginia. Under CERCLA, the Corps and EPA generally do not clean up naturally occurring substances in their unaltered form (or altered solely through naturally occurring processes) from locations where they are naturally found.

The geophysical investigation found 16 geophysical anomalies. However, after excavating each location, the anomalies were shown to be caused by innocuous metal items, such as wire and pipes. A single piece of ordnance-related scrap was found at Anomaly 1, shown as square 1 on Figure 2 of the Corps' Post Removal Action Confirmation Sampling Report (2002) (the ''Confirmation Sampling Report''). The scrap did not contain explosives, nor were any other ordnance or explosives found.

The Confirmation Sampling Report concludes that ''based on the results of the confirmation sampling investigation, no further action is recommended for the site [the Impregnation Kit Area].'' Furthermore, the report states that the Corps, EPA and VDEQ have agreed to redefine the boundaries of the Impregnation Kit Area to reflect the actual size of the removal area. The removal occurred within a 270 foot diameter circle, with an area of about 57,255 square feet. EPA has no data at this time that show releases of hazardous substances, pollutants or contaminants in the rest of the approximately 300,000 square foot rectangle described in EPA's 1999 HRS Documentation Record. EPA bases its proposal to delete the soil in the Impregnation Kit Area (all 300,000 square feet) on the results of the Corps' Post Removal Action Confirmation Sampling Report and the other documents in the Deletion Docket. Based on these documents, EPA, with the concurrence of the Commonwealth of Virginia, has determined that the Corps has implemented all appropriate response actions for the soil in the Impregnation Kit Area and no further response action is appropriate for the soil in this area.

Ground water beneath the Impregnation Kit Area has not been fully characterized and is not proposed for deletion from the NPL. Although some sampling and evaluation has been completed, more study is needed to better understand whether the ground water is contaminated and, if so, to what extent. Hazardous substances, including explosives, have been detected in ground water at other locations within Nansemond. It has not been clearly demonstrated that hazardous substances, pollutants or contaminants have been, or continue to be, released into the ground water beneath the Impregnation Kit Area at levels of concern to human health or the environment. Data gathered so far do not appear to indicate unacceptable human health threats from ground water beneath the Impregnation Kit Area, except perhaps if used for drinking water. Accordingly, the present owner of the property has agreed to prohibit drinking of ground water beneath the Impregnation Kit Area through a restrictive covenant, or similar legal device, in a deed. In addition, a City of Suffolk ordinance, section 90–126, requires all new premises, buildings or dwellings abutting a city water main to connect to the water main. This means that, under current law, any new buildings on the Impregnation Kit Area would connect to the city water main, reducing the likelihood that people would choose to drill wells and use ground water beneath the Impregnation Kit Area. The EPA and Corps plan future investigations to determine whether the ground water beneath the Impregnation Kit Area, and other areas within Nansemond, poses a risk to human health or the environment.

Community Involvement

The Corps and EPA have had a comprehensive public involvement program for several years at Nansemond. The Corps prepared its first community relations plan for Nansemond in 1996 and in 1997 organized a Restoration Advisory Board (RAB) to solicit the views of local citizens and other interested parties on the environmental restoration at Nansemond. RAB members include representatives of the Corps, EPA, VDEQ and community members. RAB members meet every second month to review and comment on technical documents and plans relating to the ongoing environmental restoration activities at Nansemond. Meetings are open to all members of the public. The 1998 removal, the post confirmation sampling and plans to partially delete the Impregnation Kit Area have been discussed at RAB meetings.

The Corps and EPA have also established document repositories, described above, to make available to the public information about the investigation and cleanup at Nansemond.

Current Status

Removal of impregnation kits and associated contaminated soil in the Impregnation Kit Area has been successfully completed. No further response action is planned or scheduled for the soil in this area. Ground water, however, may be the subject of future response actions under CERCLA. In the

future, five-year reviews may be required at Nansemond if other remedies are selected that leave waste on site above levels that allow for unlimited use and unrestricted exposure.

While EPA does not believe that any future response actions will be needed for the soil in the Impregnation Kit Area, if future conditions warrant such action, the proposed deletion area remains eligible for future response actions. Furthermore, this partial deletion does not alter the status of any other areas at Nansemond that are not proposed for deletion and remain on the NPL, including, but not limited to, the ground water beneath the Impregnation Kit Area.

EPA, together with Corps and with concurrence from the Commonwealth of Virginia, has determined that all appropriate CERCLA response actions have been completed for the soil in the Impregnation Kit Area and protection of human health and the environment has been achieved in these areas. Therefore, EPA makes this proposal to delete the soil in the Impregnation Kit Area of Nansemond site from the NPL.

Dated: January 9, 2003.

Thomas Voltaggio,

Acting Regional Administrator, Region III.

[FR Doc. 03–1144 Filed 1–17–03; 8:45 am]

BILLING CODE 6560–50–P

FEDERAL COMMUNICATIONS COMMISSION

47 CFR Part 15

[ET Docket No. 02–380; FCC 02–328]

Spectrum for Unlicensed Devices

AGENCY: Federal Communications Commission.

ACTION: Proposed rule; notice of inquiry.

SUMMARY: This document requests comments from the public on the possibility of permitting unlicensed devices to operate in additional frequency bands. Specifically, the Commission seeks comments on the feasibility of allowing unlicensed devices to operate in TV broadcast spectrum at locations and times when spectrum is not being used, and on the technical requirements that would be necessary to ensure that such devices do not cause interference to authorized services operating within the TV broadcast bands. The Commission also seeks comment on the feasibility of permitting unlicensed devices to operate in other bands, such as the 3650–3700 MHz band at power levels significantly higher than the maximum permitted for unlicensed devices in other frequency bands, with only the minimal technical requirements necessary to avoid interference to licensed and incumbent services. The Commission believes that these actions could have significant benefits to the economy, businesses and consumers by allowing the development of new and innovative types of unlicensed devices.

DATES: Written comments are due April 7, 2003, and reply comments are due May 6, 2003.

ADDRESSES: Office of the Secretary, Federal Communications Commission, 445 12th Street, SW., TW–A325, Washington, DC 20554.

FOR FURTHER INFORMATION CONTACT: Hugh L. Van Tuyl, Office of Engineering and Technology, (202) 418–7506, TTY (202) 418–2989, e-mail: *hvantuyl@fcc.gov.*

SUPPLEMENTARY INFORMATION: This is a summary of the Commission's *Notice of Inquiry,* ET Docket 02–380, FCC 02–328, adopted December 11, 2002, and released December 20, 2002. The full text of this document is available for inspection and copying during regular business hours in the FCC Reference Center (Room CY–A257), 445 12th Street, SW., Washington, DC 20554. The complete text of this document also may be purchased from the Commission's copy contractor, Qualex International, 445 12th Street, SW., Room, CY–B402, Washington, DC 20554. The full text may also be downloaded at: *http://www.fcc.gov.* Alternative formats are available to persons with disabilities by contacting Brian Millin at (202) 418–7426 or TTY (202) 418–7365.

Pursuant to §§ 1.415 and 1.419 of the Commission's rules, 47 CFR 1.415, 1.419, interested parties may file comments on or before April 7, 2003, and reply comments on or before May 6, 2003. Comments may be filed using the Commission's Electronic Comment Filing System (ECFS) or by filing paper copies. *See Electronic Filing of Documents in Rulemaking Proceedings,* 63 FR 24121, May 1, 1998. Comments filed through the ECFS can be sent as an electronic file via the Internet to *http://www.fcc.gov/e-file/ecfs.html.* Generally, only one copy of an electronic submission must be filed. If multiple docket or rulemaking numbers appear in the caption of this proceeding, however, commenters must transmit one electronic copy of the comments to each docket or rulemaking number referenced in the caption. In completing the transmittal screen, commenters should include their full name, U.S. Postal Service mailing address, and the applicable docket or rulemaking number. Parties may also submit an electronic comment by Internet e-mail. To get filing instructions for e-mail comments, commenters should send an e-mail to *ecfs@fcc.gov,* and should include the following words in the body of the message, ''get form <your e-mail address.'' A sample form and directions will be sent in reply. Parties who choose to file by paper must file an original and four copies of each filing. If more than one docket or rulemaking number appear in the caption of this proceeding, commenters must submit two additional copies for each additional docket or rulemaking number.

All filings must be addressed to the Commission's Secretary, Office of the Secretary, Federal Communications Commission. Filings can be sent by hand or messenger delivery, by commercial overnight courier, or by first-class or overnight U.S. Postal Service mail (although we continue to experience delays in receiving U.S. Postal Service mail). The Commission's contractor, Vistronix, Inc., will receive hand-delivered or messenger-delivered paper filings for the Commission's Secretary at 236 Massachusetts Avenue, NE., Suite 110, Washington, DC 20002. The filing hours at this location are 8 a.m. to 7 p.m. All hand deliveries must be held together with rubber bands or fasteners. Any envelopes must be disposed of before entering the building. Commercial overnight mail (other than U.S. Postal Service Express Mail and Priority Mail) must be sent to 9300 East Hampton Drive, Capitol Heights, MD 20743. U.S. Postal Service first-class mail, Express Mail, and Priority Mail should be addressed to 445 12th Street, SW., Washington, DC 20554.

Summary of Notice of Inquiry

1. The Commission initiated this *Notice of Inquiry* (''NOI'') to obtain comments from the public on the possibility of permitting unlicensed devices to operate in additional frequency bands. Specifically, we seek comments on the feasibility of allowing unlicensed devices to operate in TV broadcast spectrum at locations and times when spectrum is not being used, and on the technical requirements that would be necessary to ensure that such devices do not cause interference to authorized services operating within the TV broadcast bands. The Commission also seeks comment on the feasibility of permitting unlicensed devices to operate in other bands, such as the 3650–3700 MHz band at power levels significantly higher than the maximum permitted for unlicensed devices in other frequency bands, with only the

minimal technical requirements necessary to avoid interference to licensed and incumbent services. We believe that these actions could have significant benefits to the economy, businesses and consumers by allowing the development of new and innovative types of unlicensed devices.

2. Unlicensed transmitters may be operated under the provisions of part 15 of the Commission's rules. Part 15 transmitters generally operate on frequencies shared with authorized services and at relatively low power. Operation of a part 15 transmitter is subject to the conditions that the device not cause interference to authorized services, and that the device must accept any interference received. The Commission made two significant changes to part 15 in the 1980's that enabled the development of new types of unlicensed devices and led to increased use of these devices.

3. The first significant change, in 1985, was to permit spread spectrum transmitters to operate on an unlicensed basis in certain bands allocated for Industrial, Scientific and Medical (ISM) equipment. Specifically, such transmitters are permitted to operate in the 902–928 MHz, 2400–2483.5 MHz and 5725–5850 MHz bands. Spread spectrum transmitters spread their energy over a wide bandwidth, which increases resistance to interference and can allow multiple transmitters to share the same spectrum. Such transmitters are permitted to operate with a power of up to one watt, which is considerably higher than the maximum power permitted for other part 15 devices. This allows for significantly greater transmission range than other part 15 devices. In addition, the relatively wide bandwidth permitted for spread spectrum transmitters makes them useful for applications such as high speed data transmission. There are no limitations in the rules on the types of applications for which spread spectrum devices can be used, provided they comply with the technical requirements. The adoption of the spread spectrum rules was a major step in providing increased flexibility for unlicensed transmitters. Subsequent changes to these rules permit increased data speeds and higher gain antennas to allow greater transmission range, and apply to a broader range of spread spectrum transmitters.

4. The second significant change to part 15 was a major revision in 1989. Under this revision, unlicensed transmitters are permitted to operate on almost any frequency, provided they meet relatively tight emission limits. They are not permitted to operate in certain designated ''restricted bands,'' and are generally prohibited from operating in the TV broadcast bands, except for remote control devices and medical telemetry transmitters. Specific types of unlicensed transmitters can operate in certain frequency bands. In addition to spread spectrum transmitters in the ISM bands, non-spread spectrum transmitters can operate in the ISM bands for any type of application at lower power levels than spread spectrum transmitters. The 1985 and 1989 revisions of part 15 have provided substantially increased flexibility in the types of unlicensed devices that can be developed, and led to the large numbers of unlicensed devices currently available today.

5. The Commission's Spectrum Policy Task Force conducted a comprehensive review of spectrum policy which included a public notice seeking comment on, among other issues, whether additional spectrum should be made available for unlicensed use. In addition, the Task Force held a public workshop on unlicensed spectrum use. In response to the public notice, a significant number of parties stated that additional spectrum should be made available for unlicensed use. Further, these parties indicated a general perception that the creation of unlicensed bands has been very successful in allowing the introduction of new technology and that additional unlicensed bands would create more such opportunities.

6. We believe that we should consider permitting additional flexibility to help enable the development of new and innovative types of unlicensed devices, such as power levels greater than the one watt maximum currently permitted for Part 15 devices and/or high gain antennas to enable greater transmission range. We have identified two possible candidate bands for such expanded unlicensed operation: the television broadcast bands and the 3650–3700 MHz band.

TV Broadcast Bands

7. The unused portions of the TV spectrum appear to be a suitable choice for expanded unlicensed operation for several reasons. There is significant bandwidth available because each TV channel is 6 MHz wide, and multiple vacant channels are generally available in an area to provide greater bandwidth. Allowing unlicensed devices to operate on TV channels that are not being used in a particular area would be a more efficient use of the spectrum. Unlicensed use of this spectrum as opposed to licensed use appears to be appropriate because the operating power levels of unlicensed devices are generally lower than the power levels used in commercial mobile radio services, making it easier for unlicensed devices to identify and operate on unused frequencies without causing interference to authorized services. Further, the frequencies and amount of unused TV spectrum vary from location to location and could change over time as TV stations or other authorized services are added or change frequency, potentially complicating the licensing of commercial services in unused TV spectrum. We note also that the unlicensed uses we identify in this *NOI* are not intended to limit future licensed use or to guarantee spectrum access rights for this band. We seek comment on the following questions concerning the use of the TV broadcast bands by unlicensed devices.

- Should new unlicensed devices be permitted to operate within any portions of the TV bands, and if so, which portions? Are there any other bands where new unlicensed devices could be permitted to operate?
- Should the use of certain channels by unlicensed device not be permitted? For example, channel 37 is allocated for radio astronomy operations and the Wireless Medical Telemetry Service, and unlicensed operations on this channel may not be appropriate because of special interference concerns associated with the sensitive nature of radio astronomy reception and the critical safety function of medical telemetry equipment. In addition, there are concerns about possible interference to channels 2, 3 and 4 because they are used for, or are adjacent to, the output channels of VCRs and other set-top boxes. Further, spectrum currently allocated to channels 52–69 (698–806 MHz) has been reallocated and has been or will be licensed for new services. Should unlicensed operations be permitted in the reclaimed spectrum?
- Should there be geographic restrictions on where unlicensed operation in the TV bands is permitted, such as in areas where co-channel or adjacent channel television, Private Land Mobile Radio Service (PLMRS) or Commercial Mobile Radio Service (CMRS) is present, or in the border areas near Canada and Mexico?
- What restrictions, if any, should be placed on the applications or numbers of unlicensed devices that would be permitted in the TV broadcast bands, and why would such restrictions be needed? For example, should applications be limited to fixed uses?
- Are any special, temporary restrictions needed to ensure that unlicensed devices do not impact the

transition of television from analog to digital service? For example, as part of the transition process, television stations may be switching channels and modifying their service area. How can we ensure that unlicensed operation does not cause interference when stations make such changes or when new DTV stations commence operation?

• How would new unlicensed devices affect the ability of broadcasters to provide ancillary services such as data after the digital transition?

8. The part 15 rules require unlicensed transmitters to meet technical requirements to ensure that they will not cause interference to authorized users. The types of requirements that must be met typically include in-band and out-of-band power or field strength limits, and may include other requirements such as bandwidth, power spectral density, frequency stability, and antenna gain. As noted above, there are several authorized users of the TV bands that must be protected from interference from unlicensed devices. Analog and digital TV stations must be protected from interference. Low power TV and TV translator stations have defined protected service contours. Low power auxiliary stations such as wireless microphones and wireless assist video devices on TV channels do not have defined protected contours, but unlicensed devices are not permitted to cause interference to them. PLMRS and CMRS base stations are assigned within 50 miles of the center of the cities where they are permitted to operate in the 470–512 MHz band, and mobile units must be operated within 30 miles of their associated base station or stations. In addition to these authorized users, unlicensed medical telemetry transmitters are permitted to operate on channels 7–46, although the Commission has allocated bands where such transmitters can operate with protection from interference. The Commission seek comment on the following questions concerning the necessary technical requirements for unlicensed transmitters to prevent interference to TV reception and other authorized services within the TV bands.

• What power and/or field strength limits are necessary for unlicensed transmitters within the TV bands to prevent interference to TV reception? Could unlicensed devices operate in TV bands with a power greater than the 1 watt maximum permitted for part 15 devices in the ISM bands or power greater than the general part 15 limit?

• What separation distances or D/U ratios should be established between unlicensed devices and the service of analog, digital, Class A and low power TV and TV translator stations? What assumptions should be used to determine these protection criteria? Should TV stations be protected only within their grade B or noise limited service contours, or should unlicensed devices be required to protect TV reception from interference regardless of the received TV signal strength? Is protection necessary only for co-channel and adjacent channel stations? What special requirements, if any, are necessary to protect TV reception in areas where a station's signal is weak? Would minimum performance standards for receivers facilitate the sharing of TV spectrum with unlicensed devices?

• What technical requirements are necessary to protect other operations in the TV bands, including the PLMRS and CMRS in the areas where they operate on TV channels and low power auxiliary stations such as wireless microphones and wireless assist video devices? Could technical requirements be developed that would allow unlicensed devices to co-exist with new licensed services on former TV channels 52–69? Should unlicensed transmitters be required to protect unlicensed medical telemetry transmitters operating on TV channels 7–46 from interference?

• What requirements, if any, are necessary to prevent interference to coaxial cable or other multi-channel video service providers using the TV bands or to prevent interference to TVs, VCRs and set-top boxes caused by direct pickup of signals from unlicensed devices?

• Should any antenna requirements be imposed? Can technologies such as ''smart antennas'', which automatically change their directivity as necessary, assist unlicensed devices in sharing the TV bands? Should unlicensed devices be required to use an integrated transmitting antenna and be prevented from using external amplifiers and antennas?

9. In addition to meeting power and/or field strength limits, we believe that an unlicensed device operating in the TV band should have certain capabilities to avoid causing interference to licensed services. Specifically, an unlicensed device should be able identify unused frequency bands before it can transmit. One possible approach would be for a device to monitor portions of the spectrum where it could operate, identify a frequency band that is not being used, and then transmit in the frequency band identified. A device should also have to be able to avoid tying up a frequency in the event a licensed user wishes to commence transmissions. We seek comment on the following questions concerning the capabilities that unlicensed devices operating in the TV broadcast bands should have.

• What are the specific capabilities that an unlicensed transmitter should have to successfully share spectrum with licensed operations in the TV broadcast band without interference? Are there transmission protocols that could enable efficient sharing of spectrum?

• Could GPS or other location techniques be incorporated into an unlicensed device so it could determine its precise location and identify licensed users in its vicinity by accessing a database? Would such an approach be reliable, and could it be combined with other methods to prevent interference to licensed services? What specific methods could be used to protect low power auxiliary stations such as wireless microphones that are not listed in a database?

• Once an unlicensed device commences transmissions on an open frequency, how can it ensure that interference will not be caused to a licensed user of that frequency who wishes to commence transmissions? Is there a mechanism that can avoid such ''collisions'' or mitigate their effect? For example, should these devices have limited ''duty cycles'' in a given frequency band?

• Is frequency agile equipment, as well as the protocols to enable efficient frequency sharing, feasible in the near-term?

• How could the Commission enforce any rules that may be adopted for unlicensed devices to ensure that such devices do not cause interference to authorized users of the TV bands?

• Is it necessary to establish any standards to allow sharing between unlicensed users of the TV bands? If so, how do we arrive at standards and what process should be put in place to make certain that the standards remain current and support innovation?

Unlicensed Operation in the 3650–3700 MHz Band

10. Another possible candidate band we have identified for expanded unlicensed operation is the 3650–3700 MHz band (''3650 MHz band''). The 3600–3700 MHz band was previously allocated for use by the Federal Government on a primary basis for radiolocation services, and for non-government use in the Fixed Satellite Service (FSS), limited to space-to-Earth transmissions in international inter-continental systems.'' Pursuant to the

Omnibus Budget Reconciliation Act of 1993 (''OBRA–93''), the National Telecommunications and Information Administration (''NTIA'') identified the 3650–3700 MHz portion of this band for transfer, effective January 1999, from a Government/non-Government shared use status to a mixed-use status. A condition of the transfer allows Government radiolocation stations to continue to operate indefinitely in the 3650 MHz band at three locations with a ''radius of operation'' of 80 kilometers (49.7 miles).

11. Unlicensed operation in the 3650 MHz band, which is part of the 3600–4400 MHz band used for Federal Government and satellite operations, has been prohibited. However, the change in allocation status of the 3650 MHz band from Government/non-Government shared use to mixed use provides an opportunity for us to revisit this prohibition. The 3650 MHz band appears to be well suited for unlicensed operations for a number of reasons. First, it is a contiguous 50 MHz block of spectrum, so there is sufficient spectrum available to permit wide bandwidth applications such as high speed data transmissions. Also, it is not heavily used in most parts of the country because it is recently vacated government spectrum, and no licenses have been issued for new non-government services in the band. The only operations in this band that need to be protected from interference at this time are the FSS sites and three grandfathered government sites, and these are fixed operations at known geographic coordinates, making it easier to avoid interference to them. Given that the proposed terrestrial uses of this band involve operations from fixed sites, it would appear that unlicensed operations could be compatible with future licensed uses. For these reasons, it may be possible to permit unlicensed devices to operate in this band with minimal restrictions except those necessary to avoid interference to licensed users in the band. For example, it may be possible to permit wideband operation with high gain antennas at power levels greater than the 1 watt maximum permitted for other unlicensed devices. If unlicensed devices are permitted to operate in this band, they may have to have capabilities such as frequency agility to avoid causing interference to any fixed service operations licensed in the band.

12. Allowing unlicensed operation with very minimal technical requirements could potentially permit the development of new and innovative types of unlicensed devices that could not be operated under the current rules. Higher power limits and high gain antennas would substantially increase the operational range of devices and could permit the development of new types of wireless data networks. We seek comment on the following questions concerning permitting unlicensed operation in the 3650 MHz band with minimal requirements.

- What are the potential benefits and drawbacks of permitting unlicensed operation in this band subject to only the minimum rules necessary to avoid interference to licensed users?
- Is it viable to license fixed operations in this spectrum as proposed and permit operation of part 15 devices in unused portions on a non-interference basis?
- Could power levels greater than 1 watt be permitted for such operations without causing interference to authorized users within the band? If so, what is the maximum power level that could be permitted? Would any restrictions on antenna gain or directivity be necessary?
- What other requirements are necessary to protect FSS and Federal Government operations in the 3650 MHz band from interference? Are geographic restrictions on where an unlicensed device could operate necessary, and how could these be enforced? Could GPS be incorporated into a device so it could determine its precise location and distance from licensed users? Would such an approach be necessary or reliable?
- What other requirements would be necessary to prevent interference to other authorized services, such as out-of-band emission limits? What types of licensed services could share the 3650 MHz band with unlicensed devices?
- Is it necessary to establish any standards to allow sharing between unlicensed users of the 3650 MHz band? If so, how do we arrive at standards?
- Are there any other bands where unlicensed operation with minimal rules could be permitted without causing interference to authorized services? What other bands should we consider? What are the advantages of each?

Ordering Clause

13. Pursuant to Sections 4(i), 302, 303(e), 303(f), 303(r) and 307 of the Communications Act of 1934, as amended, 47 U.S.C. Sections 154(i), 302, 303(e), 303(f), 303(r) and 307, this Notice of Inquiry *is hereby adopted*.

Federal Communications Commission.

Marlene H. Dortch,

Secretary.

[FR Doc. 03–1206 Filed 1–17–03; 8:45 am]

BILLING CODE 6712–01–P

FEDERAL COMMUNICATIONS COMMISSION

47 CFR Part 73

[DA 02–3568; MB Docket No. 02–387; RM–10623]

Radio Broadcasting Services; Lahaina and Waianae, HI

AGENCY: Federal Communications Commission.

ACTION: Proposed rule.

SUMMARY: This document requests comments on a petition for rule making filed by Pacific Radio Group, licensee of Station KLHI(FM), Channel 266C, Lahaina, Hawaii The petition proposes to change Station KLHI(FM)'s community of license from Lahaina to Waianae, Hawaii and provide Waianae with its first local aural transmission service. The coordinates for requested Channel 266C at Waianae, Hawaii are 21–23–51 NL and 158–06–01 WL, with a site restriction of 10.7 kilometers (6.6 miles) southeast of Waianae.

Petitioner's reallotment proposal complies with the provisions of Section 1.420(i) of the Commission's Rules, and therefore, the Commission will not accept competing expressions of interest in the use of Channel 266C at Waianae, Hawaii or require the petitioner to demonstrate the availability of an additional equivalent class channel.

DATES: Comments must be filed on or before February 14, 2003, and reply comments on or before March 3, 2003.

ADDRESSES: Secretary, Federal Communications Commission, 445 12th Street, SW., Room TW–A325, Washington, DC 20554. In addition to filing comments with the FCC, interested parties should serve the petitioners' counsel, as follows: Mark N. Lipp, Esq. and J. Thomas Nolan, Esq., Shook, Hardy & Bacon, LLP.; 600 14th Street, NW., Suite 800; Washington, DC 20005–2004.

FOR FURTHER INFORMATION CONTACT: R. Barthen Gorman, Media Bureau, (202) 418–2180.

SUPPLEMENTARY INFORMATION: This is a synopsis of the Commission's Notice of Proposed Rule Making, MB Docket No. 02–387, adopted December 20, 2002, and released December 24, 2002. The full text of this Commission decision is available for inspection and copying

during regular business hours in the FCC's Reference Information Center at Portals II, 445 12th Street, SW., CY–A257, Washington, DC 20554. This document may also be purchased from the Commission's duplicating contractors, Qualex International, Portals II, 445 12th Street, SW., Room CY–B402, Washington, DC 20554, telephone 202-863–2893, facsimile 202–863–2898, or via e-mail *qualexint@aol.com.*

The provisions of the Regulatory Flexibility Act of 1980 do not apply to this proceeding.

Members of the public should note that from the time a Notice of Proposed Rule Making is issued until the matter is no longer subject to Commission consideration or court review, all *ex parte* contacts are prohibited in Commission proceedings, such as this one, which involve channel allotments. *See* 47 CFR 1.1204(b) for rules governing permissible *ex parte* contacts.

For information regarding proper filing procedures for comments, *See* 47 CFR 1.415 and 1.420.

List of Subjects in 47 CFR Part 73

Radio, Radio broadcasting.

For the reasons discussed in the preamble, the Federal Communications Commission proposes to amend 47 CFR Part 73 as follows:

PART 73—RADIO BROADCAST SERVICES

1. The authority citation for Part 73 continues to read as follows:

Authority: 47 U.S.C. 154, 303, 334, and 336.

§ 73.202 [Amended]

2. Section 73.202(b), the Table of FM Allotments under Hawaii, is amended by adding Waianae, Channel 266C, and removing Channel 266C1 at Lahaina.

Federal Communications Commission.

John A. Karousos,

Assistant Chief, Audio Division Media Bureau.

[FR Doc. 03–1200 Filed 1–17–03; 8:45 am]

BILLING CODE 6712–01–P

FEDERAL COMMUNICATIONS COMMISSION

47 CFR Part 73

[DA 02–3065; MB Docket No. 02–349, RM–10599; MB Docket No. 02–350, RM–10600]

Radio Broadcasting Services; Encinal and Sheffield, TX

AGENCY: Federal Communications Commission.

ACTION: Proposed rule.

SUMMARY: This document proposes two allotments in Encinal and Sheffield, TX. The Commission requests comment on a petition filed by Katherine Pyeatt proposing the allotment of Channel 286A at Encinal, Texas, as potentially the community's third local aural broadcast service. Channel 286A can be allotted to Encinal in compliance with the Commission's minimum distance separation requirements with a site restriction of 6.3 km (3.9 miles) north of Encinal. The coordinates for Channel 286A at Encinal are 28–05–37 North Latitude and 99–20–25 West Longitude. The proposed allotment will require concurrence by Mexico because it is located within 320 kilometers (199 miles) of the Mexican border. *See* **SUPPLEMENTARY INFORMATION** *infra.*

DATES: Comments must be filed on or before February 24, 2003, and reply comments on or before March 11, 2003.

ADDRESSES: Federal Communications Commission, Washington, DC 20554. In addition to filing comments with the FCC, interested parties should serve the petitioner as follows: Katherine Pyeatt, 6655 Aintree Circle, Dallas, Texas 75214.

FOR FURTHER INFORMATION CONTACT: Deborah A. Dupont, Media Bureau (202) 418–7072.

SUPPLEMENTARY INFORMATION: This is a synopsis of the Commission's Notice of Proposed Rule Making, MB Docket Nos 02–349 and 02–350; adopted November 6, 2002 and released November 8, 2002. The full text of this Commission decision is available for inspection and copying during normal business hours in the FCC Reference Information Center (Room CY–A257), 445 12th Street, SW., Washington, DC. The complete text of this decision may also be purchased from the Commission's copy contractor, Qualex International, Portals II, 445 12th Street, SW., Room CY–B402, Washington, DC 20554, telephone (202)863–2893.

The Commission further requests comment on a petition filed by Katherine Pyeatt proposing the allotment of Channel 224C2 at Sheffield, Texas, as the community's first local FM transmission service. Channel 224C2 can be allotted to Sheffield in compliance with the Commission's minimum distance separation requirements with a site restriction of 15.7 km (9.8 miles) south of Sheffield. The coordinates for Channel 224C2 at Sheffield are 30–33–15 North Latitude and 101–52–09 West Longitude. The proposed allotment will require concurrence by Mexico because it is located within 320 kilometers (199 miles) of the Mexican border.

The Provisions of the Regulatory Flexibility Act of 1980 do not apply to this proceeding. Members of the public should note that from the time a Notice of Proposed Rule Making is issued until the matter is no longer subject to Commission consideration or court review, all *ex parte* contacts are prohibited in Commission proceedings, such as this one, which involve channel allotments. *See* 47 CFR 1.1204(b) for rules governing permissible *ex parte* contacts.

For information regarding proper filing procedures for comments, see 47 CFR 1.415 and 1.420.

List of Subjects in 47 CFR Part 73

Radio, Radio broadcasting.

For the reasons discussed in the preamble, the Federal Communications Commission proposes to amend 47 CFR Part 73 as follows:

PART 73—RADIO BROADCAST SERVICES

1.The authority citation for Part 73 continues to read as follows:

Authority: 47 U.S.C. 154, 303, 334 and 336.

§ 73.202 [Amended]

2. Section 73.202(b), the Table of FM Allotments under Texas, is amended by adding Channel 286A at Encinal and by adding Sheffield, Channel 224C2.

Federal Communications Commission.

John A. Karousos,

Assistant Chief, Audio Division, Media Bureau.

[FR Doc. 03–1199 Filed 1–17–03; 8:45 am]

BILLING CODE 6712–01–P

DEPARTMENT OF TRANSPORTATION

Research and Special Programs Administration

49 CFR Parts 171, 172, 173, 177, 178,179 and 180

[Docket No. RSPA–02–13773 (HM–218B)]

RIN 2137–AD73

Hazardous Materials; Miscellaneous Amendments

AGENCY: Research and Special Programs Administration (RSPA), DOT.

ACTION: Notice of proposed rulemaking (NPRM).

SUMMARY: RSPA proposes to make miscellaneous amendments to the Hazardous Materials Regulations based on petitions for rulemaking and RSPA

initiatives. These proposed amendments are intended to update, clarify or provide relief from certain regulatory requirements.

DATES: Comments must be received by March 17, 2003.

ADDRESSES: Submit written comments to the Dockets Management System, U.S. Department of Transportation, Room PL 401, 400 Seventh Street, SW., Washington, DC 20590–0001. Identify the docket number, RSPA–02–13773 (HM–218B) at the beginning of your comments and submit two copies. If you wish to receive confirmation of receipt of your comments, include a self-addressed stamped postcard. You may also submit comments by e-mail by accessing the Docket Management System Web site at *http://dms.dot.gov*. Click on ''Help'' to obtain instructions for filing the document electronically.

The Docket Management System is located on the Plaza Level of the Nassif Building at the above address. You can view public dockets between the hours of 9 a.m. and 5 p.m., Monday through Friday, except Federal holidays. You can also view comments on-line at *http://dms.dot.gov*.

Anyone is able to search the electronic form of all comments received into any of our dockets by the name of the individual submitting the comment (or signing the comment, if submitted on behalf of an association, business, labor union, etc.). You may review DOT's complete Privacy Act Statement in the **Federal Register** published on April 11, 2000 (Volume 65, Number 70; Pages 19477–78) or you may visit *http://dms.dot.gov*.

FOR FURTHER INFORMATION CONTACT: Gigi Corbin, Office of Hazardous Materials Standards, (202) 366–8553, Research and Special Programs Administration, U.S. Department of Transportation, 400 Seventh Street, SW., Washington, DC 20590–0001.

SUPPLEMENTARY INFORMATION:

Background

This NPRM is designed primarily to reduce regulatory burdens on industry by incorporating changes into the Hazardous Materials Regulations (HMR) based on RSPA's own initiatives and petitions for rulemaking submitted in accordance with 49 CFR 106.95. In a continuing effort to review the HMR for necessary revisions, RSPA (''we'' and ''us'') is also proposing to eliminate, revise, clarify and relax certain other regulatory requirements.

The following is a section-by-section summary of the proposed changes.

Section-by-Section Review

Part 171

Section 171.7

The American Pyrotechnics Association (APA) petitioned us to update the incorporation by reference of APA Standard 87–1, Standard for Construction and Approval for Transportation of Fireworks, Novelties, and Theatrical Pyrotechnics, from the 1998 edition to the 2001 edition (P–1412). We agree with APA's request and, in this notice, are proposing to incorporate the 2001 edition of APA Standard 87–1. APA is a trade association of the fireworks industry that promotes safety standards for all aspects of fireworks. Its members include regulated and licensed manufacturers, distributors, wholesalers, retailers, importers and suppliers of firework and professional public display firms.

The Hazardous Material Regulations allow fireworks that are manufactured in accordance with APA Standard 87–1 to be classed, approved and assigned an EX-number by the Associate Administrator without prior laboratory examination. Because the 2001 edition of APA Standard 87–1 establishes a ten-inch limit on aerial shells for fireworks that may be classed as Division 1.3 explosives, our incorporating the 2001 APA standard would result in prohibiting shells greater than ten inches from being classed as Division 1.3 explosives. However, shells ten inches or greater could be classed and approved as Division 1.1 explosives without prior examination. We are proposing this change, but we invite comments on regulatory impacts, including any cost impact, of incorporating the 2001 APA Standard 87–1.

The Compressed Gas Association (CGA) petitioned us and we are proposing to update the incorporation by reference of the following:

—CGA Pamphlet C–6.2, Guidelines for Visual Inspection and Requalification of Fiber Reinforced High Pressure Cylinders, from the 1988 edition to the 1996 edition (P–1383);
—CGA Pamphlet C–11, Recommended Practices for Inspection of Compressed Gas Cylinders at Time of Manufacture, from the 1993 edition to the 2001 edition (P–1419);
—CGA Pamphlet C–13, Guidelines for Periodic Visual Inspection and Requalification of Acetylene Cylinders, from the 1992 edition to the 2000 edition (P–1413); and
—CGA Pamphlet S–1.1, Pressure Relief Device Standards—Part 1—Cylinders for Compressed Gases, from the 1994 edition to the 2001 edition (with the exception of paragraph 9.1.1.1) (P–1401).

The National Propane Gas Association (NPGA) petitioned us and we are proposing to update the incorporation by reference of the National Fire Protection Association (NFPA) Pamphlet—Standard for the Storage and Handling of Liquefied Compressed Gases, 1979 edition, to the NFPA 58—Liquefied Petroleum Gas Code, 2001 edition (P–1120).

Based on our own initiative, we are proposing to authorize the American Society for Testing and Materials (ASTM) E 114–95 test method for straight beam examination of the tubular surface of cylinders and tubes. ASTM E 114, in conjunction with ASTM E 213–98, is used to measure the wall thickness of a cylinder and to detect general corrosion and defects located in the path of the ultrasonic straight beam direction. ASTM E 213 is used to detect sidewall defects such as cracks, voids and pits in cylinders. We adopted ASTM E 213 for use in a final rule published in the **Federal Register** on August 8, 2002 (Docket HM–220D, 67 FR 51626), but inadvertently did not authorize the use of ASTM E 114.

We are also proposing to incorporate by reference the Chlorine Institute instruction booklets entitled ''Chlorine Institute Emergency Kit 'A' for 100-lb. & 150-lb. Chlorine Cylinders'' and ''Chlorine Institute Emergency Kit 'B' for Chlorine Ton Containers''. (*See* § 173.3 preamble discussion.)

We are proposing to update the incorporation by reference of the Association of American Railroads (AAR) Manual of Standards and Recommended Practices, Section C—Part III, Specification for Tank Cars, Specification M–1002, from the January 1996 edition to the December 2000 edition. We are also proposing to remove the entry for the 1992 edition of this manual since Appendix Y was revised in the 2000 edition, thus making the 1992 edition obsolete.

Section 171.15

Currently the HMR require a shipper to notify the Bureau of Explosives (BOE) whenever a rail car containing a time-sensitive product is not received by the consignee within 20 days from shipment (*see* §§ 173.314(g)(1) and 173.319(a)(3)). We are proposing to move these requirements to § 171.15 by adding a new paragraph (d) and requiring notification to the Federal Railroad Administration instead of BOE.

Part 172

Section 172.101

In response to a petition from the NPGA [P–1265], we are proposing to amend the entry for ''Butylene'' by adding a limited quantity exception for compressed gases (*see* § 173.306) in column (8A) of the Hazardous Materials Table (HMT). This amendment would be consistent with the entries for ''Petroleum gases, liquefied'' and other hydrocarbons.

We are proposing to add a new domestic entry for ''Cartridges power devices, ORM–D'' to the HMT for consistency with the packaging exceptions authorized in § 173.63(b). This entry is limited to those cartridges, small arms and cartridges power devices which are authorized to be reclassed and shipped as ORM–D in § 173.63(b)(1).

For Zone B Toxic Inhalation Hazard entries with ID numbers UN3303, UN3304, UN3305, UN3306, UN3307, UN3308, UN3309, and UN3310, we would revise the entry in the HMT by adding Special Provisions B9 and B14; and for Zone C Toxic Inhalation Hazard entries with the same ID numbers, we would revise the entry in the HMT by adding Special Provision B14. The Special Provisions were inadvertently omitted in previous rulemakings.

For compressed gas entries with ID numbers UN 3304, UN 3305, and UN 3306 and liquefied gas entries with ID numbers UN 3308, UN 3309 and UN 3310, we propose to remove the letter ''I'' in column 1 of the HMT. The affected proper shipping names may be used in both domestic and in international transportation.

For the entry ''Liquefied gas, toxic, oxidizing, corrosive, n.o.s.'' Hazard Zones B, C and D, we are proposing to correct a typographical error in the subsidiary labeling requirements by removing the Division 2.1 label and adding the Division 5.1 label in its place.

We are proposing to revise the entry for ''Gas sample, non-pressurized, toxic, n.o.s.'' by adding Special Provision 6 in column (7) of the HMT. The entry is classed as a Division 2.3 (gas poisonous by inhalation) material and must be described as an inhalation hazard under the provisions of the HMR.

Section 172.504

Currently, paragraph (d) excepts non-bulk packagings that contain only the residue of a hazardous material covered by table 2 from being included when determining placarding requirements. We are proposing to revise paragraph (d) to clarify that the exception does not apply to poison inhalation hazard materials subject to the subsidiary placarding requirements in § 172.505.

Part 173

Section 173.3

We are proposing that a DOT 3A480 or 3AA480 specification cylinder containing Chlorine or Sulphur dioxide (both materials poisonous by inhalation) that has developed a leak in the valve or fusible plug may be temporarily repaired using a Chlorine Institute ''A'' kit and be transported by private or contract carrier one time, one way from the point of discovery to the appropriate facilities for discharge and examination. Repairs must be performed only by personnel who have been trained in the use of the devices and tools in the Chlorine Institute ''A'' kit and are knowledgeable concerning the properties of chlorine and sulphur dioxide. Similarly, we are proposing to permit a DOT 106A500 specification multi-unit tank car tank containing Chlorine or Sulphur dioxide that has developed a leak in the valve or fusible plug to be temporarily repaired using a Chlorine Institute ''B'' kit. We have authorized the use of the kits under the exemption program for several years with satisfactory shipping experience. Incorporating the exemption provisions into the regulations will facilitate the movement of affected containers to appropriate facilities.

Section 173.12

Currently, § 173.12(c) authorizes the reuse of packagings for shipments of ''hazardous waste'' to designated facilities. In response to a petition from North American Transportation Consultants, Inc. (NATC) (P–1407), we are proposing to extend the exception in § 173.12(c) to shipments of all waste materials and not just to materials that meet the definition of ''hazardous waste'' and are subject to the Uniform Hazardous Waste Manifest requirements of the U.S. Environmental Protection Agency.

Section 173.29

Currently, paragraph (c) excepts non-bulk packagings that contain only the residue of a hazardous material covered by Table 2 of § 172.504(e) from being included when determining placarding requirements and from shipping paper requirements. We are proposing to revise paragraph (c) to clarify that the exceptions do not apply to poison inhalation hazard materials subject to the subsidiary placarding requirements in § 172.505.

Section 173.31

We are proposing to add a new paragraph authorizing the continued use of DOT 103 and 104 tank cars that may no longer be constructed. We are also proposing to revise paragraph (b)(2)(ii) for clarity by removing the reference to ''Chloroprene, inhibited'' since Special Provision B57 addresses the requirements for chloroprene in DOT 115A tank cars, and to remove the last sentence since ''breather holes'' are not authorized in the regulations. In addition, we are proposing to revise paragraph (b)(5) to reflect changes to Appendix Y of the AAR Specifications for Tank cars. This change would recognize the 2000 edition of Appendix Y in the AAR Tank Car Manual.

Section 173.35

In paragraph (b), we are proposing to add, for purposes of clarification, a parenthetical cross-reference to § 180.352 that contains detailed requirements for retest and inspection of IBCs.

Section 173.50

The definition of ''explosive'' in § 173.50 currently does not specifically include pyrotechnics. We are proposing to add a statement indicating that pyrotechnic substances and articles are considered explosives unless otherwise classed.

Section 173.54

Section 173.54 currently forbids offering a leaking or damaged package of explosives for transportation. We propose to clarify that leaking or damaged articles, even if not in a package, are also prohibited.

Section 173.62

We are proposing to revise paragraph (c), in the table of Packing Methods, to clarify that Packing Instruction 132(a) applies to articles with closed casings and Packing Instruction 132(b) applies to articles without closed casings.

Section 173.314

We are proposing to remove the wording ''safety relief'' and add the wording ''reclosing pressure relief'' in paragraphs (k) and (m) for consistency. Also, we are proposing to move the reporting requirements in paragraph (g)(1) to § 171.15(d) and, therefore, are proposing to remove and reserve paragraph (g)(1).

Section 173.315

On May 24, 1999, we published a final rule (Docket HM–225A; 64 FR 28030) to require cargo tank motor vehicles (CTMVs) used to transport

liquefied compressed gases to be equipped with emergency discharge control equipment, including passive systems that will shut down the unloading operation without human intervention and remote control devices that enable an attendant to stop the unloading process at a distance from the vehicle. These requirements are keyed to the degree of risk associated with the transportation of specific liquefied compressed gases. Among other requirements, the regulation requires a CTMV in metered delivery service transporting a Division 2.2 material with a subsidiary hazard, a Division 2.1 material, or anhydrous ammonia in a cargo tank with a capacity of 3,500 gallons or less to be equipped with an off-truck remote means to close the internal self-closing stop valve and shut off all motive and auxiliary power equipment. Metered delivery service means a cargo tank unloading operation conducted at a metered flow rate of 100 gallons per minute or less through an attached delivery hose with an inside diameter of 1¾ inches or less. A CTMV transporting a Division 2.2 material with a subsidiary hazard, a Division 2.1 material, or anhydrous ammonia in other than metered delivery service must be equipped with a passive emergency discharge control system that will shut down the unloading operation within 20 seconds of a complete separation or rupture of the delivery hose.

Since our adoption of the above requirements in 1999, it has come to our attention that there are CTMVs that transport Division 2.2 materials with a subsidiary hazard, Division 2.1 materials, and anhydrous ammonia in both metered and other than metered delivery service. A strict reading of the current regulatory requirements applicable to emergency discharge control equipment in § 173.315(n) would appear to require these CTMVs to be equipped with both a passive and an off-truck remote means of emergency discharge control. It was never our intention to require a CTMV to meet both requirements. If a CTMV operating in both metered and non-metered delivery service is equipped with a passive means of shut-down that meets the requirements in § 173.315(n)(2) and functions for both metered and non-metered deliveries, then it need not also be equipped with an off-truck remote means of shut down. In this NPRM, we propose to clarify the emergency discharge control requirements by adding a specific entry in the chart in § 173.315(n)(1) to address CTMVs that operate in both metered and other than metered delivery service. Proposed § 173.315(n)(1)(vi) would permit CTMVs in both metered and other than metered delivery service, with capacities of more than 3,500 water gallons, used to transport Division 2.2 materials with a subsidiary hazard, Division 2.1 materials, and anhydrous ammonia to be equipped with a passive means of emergency discharge control, provided that the system functions for both metered and non-metered deliveries. If the system functions only for non-metered deliveries, then the CTMV also would have to be equipped with an off-truck remote emergency discharge control system.

Section 173.319

We are proposing to move the reporting requirements in paragraph (a)(3) to § 171.15(d) and, therefore, are proposing to remove and reserve paragraph (a)(3). (*See* § 171.15 preamble discussion.)

Section 173.320

Currently, cryogenic liquids are not subject to the requirements of the HMR when transported by motor vehicle or railcar if they meet certain conditions such as complying with the requirements in Subparts A, B, C and D of part 172. We are proposing to amend paragraph (a)(2) by adding the requirements in subparts G (Emergency Response Information) and H (Training) of part 172 for transportation by rail or highway. We never intended to except shipments of cryogenic liquids from these requirements.

Part 177

Section 177.834

Currently, § 177.834(a) requires packagings not permanently attached to the motor vehicle and containing Classes 2, 3, 7, and 8 and Division 6.1 and 6.2 materials to be secured against movement within the vehicle. Section 177.834(g) currently requires packages of Class 1, 2, 3, 4, 5, 8 and Division 6.1 and 6.2 materials to be braced to prevent relative motion between themselves. In response to a petition for rulemaking from the Georgia Public Service Commission [P–1100], we are proposing to amend § 177.834(a) to require that any packaging containing a hazardous material, regardless of class or division, be secured against movement if the packaging is not permanently attached to a motor vehicle. Additionally, we are proposing to incorporate into paragraph (a) the closely related requirements in § 177.834(g), to prevent relative motion between the hazardous material packages themselves and the vehicle and to ensure that packages that have valves or other fittings be loaded in a manner that minimizes the likelihood that the valves or other fittings will be damaged during transportation. Subsequently, paragraph (g) will be reserved. RSPA agrees with the petitioner that securement of packages containing hazardous materials to prevent movement in transit will reduce damage to packages and thus, enhance driver and public safety.

Based on our own initiative and to be consistent with a similar requirement in Parts 174, 175, and 176, we are proposing to add a new paragraph (b) requiring packages bearing orientation markings to be loaded in such a way that they remain in the correct position indicated by the markings.

Section 177.835

Section 177.835 prohibits carrying a Division 1.1 or Division 1.2 explosive material in a combination of vehicles if the other vehicle is transporting a Division 2.3 or Division 6.1 material. This requirement is more restrictive than the ''Segregation Table for Hazardous Materials'' in § 177.848(d), which restricts loading and transporting of Division 1.1 or 1.2 explosives with materials in Division 2.3, Hazard Zone A or B, and in Division 6.1, PG I, Hazard Zone A. For consistency with the provisions in § 177.848(d), we are proposing to revise § 177.835(c)(4)(iii) to limit the segregation restriction to Division 2.3 materials in Hazard Zone A or B and to Division 6.1, PG I materials in Hazard Zone A.

Section 177.837

Currently, § 177.837 does not permit the engine of a cargo tank motor vehicle to be running during loading and unloading of Class 3 materials. In response to a petition from Monsanto [P–1276], we are proposing to amend paragraph (a) to permit the diesel engine of a cargo tank motor vehicle to be running during loading and unloading of Class 3 materials if the ambient temperature is at or below −12 °C (10 °F). The petitioner states that a motor vehicle's diesel engine is very difficult to restart if the engine is turned off in extremely cold weather for loading or unloading of product. The petitioner believes that the operating benefits of leaving a motor vehicle engine running in ambient temperatures of below −12 °C (10 °F) outweigh the flammability risks. We concur and are proposing to amend § 177.837 accordingly.

Section 177.841

We are proposing to revise paragraph (e) to expand the prohibition of

transporting packagings bearing or required to bear a POISON or POISON INHALATION HAZARD label to include packagings that are placarded or required to be placarded POISON or POISON INHALATION HAZARD. Section 172.514(c) permits placarding in lieu of labeling for certain bulk packagings.

Part 178

Section 178.45

We are proposing to revise paragraph (h) to authorize use of the ASTM E 114 test method for straight beam examinations on the tubular surface of cylinders and tubes as we stated earlier in this preamble in the discussion to § 171.7.

Part 179

New construction of specification DOT103 and 104 tank cars is no longer authorized; therefore, we propose to remove the specifications and all references to DOT 103 and 104 tanks cars from this part. (Continued use of DOT 103 and 104 tank cars is authorized in §§ 173.31 and 180.507.)

Section 179.1

Paragraph (a) implies that only tanks transporting hazardous materials are subject to the jurisdiction of DOT. We are proposing to revise paragraph (a) to clarify that DOT specification tanks, even when they are transporting non-regulated commodities, are subject to the jurisdiction of DOT, at least as to the tank itself.

Section 179.3

We are proposing to revise § 179.3 for clarity.

Section 179.5

We are proposing to revise this section by removing an obsolete requirement to furnish a Certificate of Construction to the Department.

Section 179.7

We are proposing to revise paragraph (f) by removing an outdated compliance date.

Section 179.100–13

In paragraphs (b) and (c), we are proposing to add, for purposes of clarification, a reference to § 173.314(j), which contains excess flow valve requirements for flammable gases.

Part 179 Subpart D

We are proposing to revise the heading for Subpart D by removing the reference to DOT–103 and DOT–104 tank cars.

Section 179.200

We are proposing to revise the section heading by removing the reference to DOT–103 and DOT–104 tank cars.

Section 179.200–14

We are proposing to revise paragraph (a) by removing the reference to DOT–103 and DOT–104 tank cars.

Section 179.200–23

We are proposing to revise the section heading by removing the words ''safety relief'' and adding ''pressure relief'' in their place.

Section 179.200–24

We are proposing to revise the table by removing the reference to a DOT–103–W tank car and adding a reference to DOT–111A tank car in its place.

Section 179.201–1

We are proposing to revise the table by removing the entries for spec DOT–103 and DOT–104 tank cars because new construction of specification DOT103 and 104 tank cars is no longer authorized. (Continued use of DOT 103 and 104 tank cars is authorized in §§ 173.31 and 180.507.)

Section 179.201–2

Section 179.201–2 addresses minimum plate thickness for DOT specification tank cars that may no longer be constructed. Therefore, we are proposing to remove and reserve § 179.201–2.

Section 179.201–3

We are proposing to revise paragraph (b) by removing the reference to DOT–103 tank cars.

Part 180

Section 180.507

We are proposing to add a new paragraph authorizing the continued use of DOT 103 and 104 tank cars, which may no longer be constructed.

Regulatory Analyses and Notices

A. Executive Order 12866 and DOT Regulatory Policies and Procedures

This proposed rule is not considered a significant regulatory action under section 3(f) of Executive Order 12866. Therefore, it was not reviewed by the Office of Management and Budget (OMB), and a regulatory assessment was not required for OMB. This proposed rule is not considered to be significant under the Regulatory Policies and Procedures order issued by the U.S. Department of Transportation (44 FR 11034) and therefore a Regulatory Analysis under the DOT order is not required.

In this notice, we propose to amend miscellaneous provisions in the HMR to clarify the provisions and to relax overly burdensome requirements. We are also responding to requests from industry associations to update references to standards that are incorporated in the HMR. For example, the American Pyrotechnics Association petitioned us to incorporate the 2001 edition of APA Standard 87–1. (See § 171.7 preamble discussion.) These clarifications and updates of the HMR will enhance safety.

Because the proposed changes clarify the requirements and respond to requests from industry, we believe the impact of these proposed changes to be so minimal that the proposal does not warrant a regulatory evaluation. However, we invite public comments on any impacts of proposed changes and may revise this determination as a result of comments.

B. Executive Order 13132

This proposed rule was analyzed in accordance with the principles and criteria contained in Executive Order 13132 (''Federalism''). Federal law expressly preempts State, local, and Indian tribe requirements, applicable to the transportation of hazardous materials, that cover certain subjects and are not substantively the same as the Federal requirements. 49 U.S.C. 5125(b)(1). These subjects are:

(i) The designation, description, and classification of hazardous materials;

(ii) The packing, repacking, handling, labeling, marking, and placarding of hazardous materials;

(iii) The preparation, execution, and use of shipping documents related to hazardous materials and requirements related to the number, content, and placement of those documents;

(iv) The written notification, recording, and reporting of the unintentional release in transportation of hazardous materials; or

(v) The design, manufacturing, fabricating, marking, maintenance, reconditioning, repairing, or testing of a packaging or container which is represented, marked, certified, or sold as qualified for use in the transport of hazardous materials.

This proposed rule concerns the classification, packaging, marking, labeling, and handling of hazardous materials, among other covered subjects.

If adopted as final, this rule would preempt any State, local, or Indian tribe requirements concerning these subjects unless the non-Federal requirements are ''substantively the same'' (see 49 CFR 107.202(d)) as the Federal requirements.

Federal hazardous materials transportation law provides at 49 U.S.C. 5125(b)(2) that if RSPA issues a regulation concerning any of the covered subjects, RSPA must determine and publish in the **Federal Register** the effective date of Federal preemption. That effective date may not be earlier than the 90th day following the date of issuance of the final rule and not later than two years after the date of issuance. RSPA requests comments on what the effective date of Federal preemption should be for the requirements in this proposed rule that concern covered subjects.

C. Executive Order 13175

This proposed rule has been analyzed in accordance with the principles and criteria contained in Executive Order 13175 (''Consultation and Coordination with Indian Tribal Governments''). Because this proposed rule does not have tribal implications, does not impose substantial direct compliance costs on Indian tribal governments, and does not preempt tribal law, the funding and consultation requirements of Executive Order 13175 do not apply, and a tribal summary impact statement is not required.

D. Regulatory Flexibility Act

The Regulatory Flexibility Act (5 U.S.C. 601 *et seq.*) requires an agency to review regulations to assess their impact on small entities. An agency must conduct a regulatory flexibility analysis unless it determines and certifies that a rule is not expected to have a significant impact on a substantial number of small entities. This proposed rule would amend miscellaneous provisions in the HMR to clarify provisions based on our own initiative and also on petitions for rulemaking. While maintaining safety, it would relax certain requirements that are overly burdensome and would update references to consensus standards that are incorporated in the HMR.

These proposed changes are generally intended to provide relief to shippers, carriers, and packaging manufacturers, including small entities. In addition, we propose to update references to standards that are incorporated in the HMR; industry associations, representing large and small entities, requested this change.

One proposed change may have a cost impact. The APA, a trade association of the fireworks industry, filed a petition requesting that we update a reference to incorporate the 2001 edition of APA Standard 87–1. Because the 2001 edition of the APA Standard establishes a limit of ten inches on aerial shells for fireworks that may be classed as Division 1.3 explosives, our incorporating the 2001 APA standard would result in prohibiting shells greater than ten inches from being classed as Division 1.3 explosives. However, shells greater than ten inches could be classed and approved by RSPA as Division 1.1 explosives without prior examination. Therefore, it may be more expensive to transport shells larger than ten inches; those shells, however, are used only in very large shows. The entities that may be affected by this change are five manufacturers of shells over ten inches and approximately fifty importers of shells over ten inches. Some of these fifty importers are small businesses.

The changes proposed in this Notice will enhance safety, and I certify that this proposal, if promulgated, would not have a significant economic impact on a substantial number of small entities.

E. Paperwork Reduction Act

Under the Paperwork Reduction Act of 1995, no person is required to respond to a collection of information unless it displays a valid OMB control number. This NPRM does not propose any new information collection burdens.

F. Unfunded Mandates Reform Act

This proposed rule does not impose unfunded mandates under the Unfunded Mandates Reform Act of 1995. It does not result in costs of $100 million or more to either State, local, or tribal governments, in the aggregate, or to the private sector, and is the least burdensome alternative that achieves the objectives of the rule.

G. Environmental Assessment

The National Environmental Policy Act of 1969 (NEPA), as amended (42 U.S.C. 4321–4347) requires Federal agencies to consider the consequences of major Federal actions and prepare a detailed statement on actions significantly affecting the quality of the human environment. We developed an assessment to consider the effects of these revisions on the environment and determine whether a more comprehensive environmental impact statement may be required. We have tentatively concluded that there are no significant environmental impacts associated with this proposed rule. Interested parties, however, are invited to review the Environmental Assessment available in the docket and to comment on what environmental impact, if any, the proposed regulatory changes would have.

H. Regulation Identifier Number (RIN)

A regulation identifier number (RIN) is assigned to each regulatory action listed in the Unified Agenda of Federal Regulations. The Regulatory Information Service Center publishes the Unified Agenda in April and October of each year. The RIN number contained in the heading of this document can be used to cross-reference this action with the Unified Agenda.

List of Subjects

49 CFR Part 171

Exports, Hazardous materials transportation, Hazardous waste, Imports, Incorporation by reference, Reporting and recordkeeping requirements.

49 CFR Part 172

Education, Hazardous materials transportation, Hazardous waste, Labeling, Markings, Packaging and containers, Reporting and recordkeeping requirements.

49 CFR Part 173

Hazardous materials transportation, Packaging and containers, Radioactive materials, Reporting and recordkeeping requirements, Uranium.

49 CFR Part 177

Hazardous materials transportation, Motor carriers, Radioactive materials, Reporting and recordkeeping requirements.

49 CFR Part 178

Hazardous materials transportation, Motor vehicle safety, Packaging and containers, Reporting and recordkeeping requirements.

49 CFR Part 179

Hazardous materials transportation, Railroad safety, Reporting and recordkeeping requirements.

49 CFR Part 180

Hazardous materials transportation, Motor carriers, Motor vehicle safety, Packaging and containers, Railroad safety, Reporting and recordkeeping requirements.

In consideration of the foregoing, 49 CFR Chapter I would be amended as follows:

PART 171—GENERAL INFORMATION, REGULATIONS, AND DEFINITIONS

1. The authority citation for part 171 would continue to read as follows:

Authority: 49 U.S.C. 5101–5127; 49 CFR 1.53.

2. In § 171.7, in the paragraph (a)(3) table:

a. Under the entry ''American Pyrotechnics Association (APA),'' the entry would be revised;

b. Under the entry ''American Society for Testing and Materials,'' a new entry would be added in appropriate alphabetical order;

c. Under the entry ''Association of American Railroads,'' the first entry would be removed and the second entry would be revised;

d. Under the entry ''Chlorine Institute, Inc.,'' two new entries would be added in appropriate alphabetical order;

e. Under the entry ''Compressed Gas Association, Inc.,'' the address and four entries would be revised;

f. Under the entry ''National Fire Protection Association,'' the entry would be revised.

The revisions and additions would read as follows:

§ 171.7 Reference material.

(a) * * *

(3) *Table of material incorporated by reference.* * * *

Source and name of material	49 CFR reference
* * * * * * *	
American Pyrotechnics Association (APA)	
* * * * * * *	
APA Standard 87–1, Standard for Construction and Approval for Transportation of Fireworks, Novelties, and Theatrical Pyrotechnics, December 1, 2001 version.	173.56
* * * * * * *	
American Society for Testing and Materials	
* * * * * * *	
ASTM E 114–95 Standard Practice for Ultrasonic Pulse-Echo Straight-Beam Examination by the Contact Method.	178.45
* * * * * * *	
Association of American Railroads	
* * * * * * *	
AAR Manual of Standards and Recommended Practices, Section C–Part III, Specification for Tank Cars, Specification M–1002, December 2000.	173.31, 174.63, 179.6, 179.7, 179.12, 179.15, 179.16, 179.20, 179.22, 179.100, 179.101, 179.102, 179.103, 179.200, 179.201, 179.220, 179.300, 179.400, 180.509, 180.513, 180.515, 180.517.
* * * * * * *	
Chlorine Institute, Inc.	
* * * * * * *	
Chlorine Institute Emergency Kit ''A'' for 100-lb. & 150-lb. Chlorine Cylinders (with the exception of repair method using Device 8 for side leaks).	173.3
Chlorine Institute Emergency Kit ''B'' for Chlorine Ton Containers (with the exception of repair method using Device 9 for side leaks).	173.3
* * * * * * *	
Compressed Gas Association, Inc., 4221 Walney Road, Chantilly, VA 20151–2923	
* * * * * * *	
CGA Pamphlet C–6.2, Guidelines for Visual Inspection and Requalification of Fiber Reinforced High Pressure Cylinders, 1996.	173.34
* * * * * * *	
CGA Pamphlet C–11, Recommended Practices for Inspection of Compressed Gas Cylinders at Time of Manufacture, 2001.	178.35
* * * * * * *	
CGA Pamphlet C–13, Guidelines for Periodic Visual Inspection and Requalification of Acetylene Cylinders, 2000.	173.34, 173.303.
* * * * * * *	
CGA Pamphlet S–1.1, Pressure Relief Device Standards—Part 1—Cylinders for Compressed Gases, 2001 (with the exception of paragraph 9.1.1.1).	173.34
* * * * * * *	
National Fire Protection Association	
* * * * * * *	
NFPA 58-Liquefied Petroleum Gas Code, 2001—	173.315
* * * * * * *	

3. In § 171.15, a new paragraph (d) would be added to read as follows:

§ 171.15 Immediate notification of certain hazardous materials incidents.

* * * * *

(d) *Special reporting requirements for railroad transportation.* Whenever a tank car containing hydrogen chloride refrigerated liquid or flammable cryogenic liquid is not received by the consignee within 20 days from the date of shipment, the person with knowledge (shipper or carrier) shall notify the Federal Railroad Administration, Hazardous Materials Division, U.S. Department of Transportation, Washington, DC 20590–0001, 202–493–6247 or 202–493–6244 (day); 202–267–2100 (night).

PART 172—HAZARDOUS MATERIALS TABLE, SPECIAL PROVISIONS, HAZARDOUS MATERIALS COMMUNICATIONS, EMERGENCY RESPONSE INFORMATION, AND TRAINING REQUIREMENTS

4. The authority citation for part 172 would continue to read as follows:

Authority: 49 U.S.C. 5101–5127; 49 CFR 1.53.

5. In § 172.101, the Hazardous Materials Table would be amended by adding and revising, in the appropriate alphabetical sequence, the following entries to read as follows:

§ 172.101 HAZARDOUS MATERIALS TABLE

Symbols	Hazardous materials descriptions and proper shipping names	Hazard class or Division	Identification Nos.	PG	Label codes	Special provisions	(8) Packaging (§ 173.***) Exceptions	Non-bulk	Bulk	(9) Quantity limitations Passenger aircraft/rail	Cargo aircraft only	(10) Vessel stowage Location	Other
(1)	(2)	(3)	(4)	(5)	(6)	(7)	(8A)	(8B)	(8C)	(9A)	(9B)	(10A)	(10B)
	*		*	*	*		*	*	*				
	[ADD:]												
D	Cartridges power devices (*used to project fastening devices*).	ORM–D			None		63	None	None	30 kg gross	30 kg gross	A	
	*		*	*	*		*	*	*				
	[REVISE:]												
	*		*	*	*		*	*	*				
	Butylene *see also* Petroleum gases, liquefied	2.1	UN1012		2.1	19, T50	306	304	314, 315	Forbidden	150 kg	E	40
	*		*	*	*		*	*	*				
G	Compressed gas, toxic, corrosive, n.o.s. *Inhalation Hazard Zone A*.	2.3	UN3304		2.3, 8	1	None	192	245	Forbidden	Forbidden	D	40
G	Compressed gas, toxic, corrosive, n.o.s. *Inhalation Hazard Zone B*.	2.3	UN3304		2.3, 8	2, B9, B14	None	302, 305	314, 315	Forbidden	Forbidden	D	40
G	Compressed gas, toxic, corrosive, n.o.s. *Inhalation Hazard Zone C*.	2.3	UN3304		2.3, 8	3, B14	None	302, 305	314, 315	Forbidden	Forbidden	D	40
G	Compressed gas, toxic, corrosive, n.o.s. *Inhalation Hazard Zone D*.	2.3	UN3304		2.3, 8	4	None	302, 305	314, 315	Forbidden	Forbidden	D	40
G	Compressed gas, toxic, flammable, corrosive, n.o.s. *Inhalation Hazard Zone A*.	2.3	UN3305		2.3, 2.1, 8	1	None	192	245	Forbidden	Forbidden	D	17, 40
G	Compressed gas, toxic, flammable, corrosive, n.o.s. *Inhalation Hazard Zone B*.	2.3	UN3305		2.3, 2.1, 8	2, B9, B14	None	302, 305	314, 315	Forbidden	Forbidden	D	17, 40
G	Compressed gas, toxic, flammable, corrosive, n.o.s. *Inhalation Hazard Zone C*.	2.3	UN3305		2.3, 2.1, 8	3, B14	None	302, 305	314, 315	Forbidden	Forbidden	D	17, 40
G	Compressed gas, toxic, flammable, corrosive, n.o.s. *Inhalation Hazard Zone D*.	2.3	UN3305		2.3, 2.1, 8	4	None	302, 305	314, 315	Forbidden	Forbidden	D	17, 40
G	Compressed gas, toxic, oxidizing, corrosive, n.o.s. *Inhalation Hazard Zone A*.	2.3	UN3306		2.3, 5.1, 8	1	None	192	244	Forbidden	Forbidden	D	40, 89, 90
G	Compressed gas, toxic, oxidizing, corrosive, n.o.s. *Inhalation Hazard Zone B*.	2.3	UN3306		2.3, 5.1, 8	2, B9, B14	None	302, 305	314, 315	Forbidden	Forbidden	D	40, 89, 90
G	Compressed gas, toxic, oxidizing, corrosive, n.o.s. *Inhalation Hazard Zone C*.	2.3	UN3306		2.3, 5.1, 8	3, B14	None	302, 305	314, 315	Forbidden	Forbidden	D	40, 89, 90
G	Compressed gas, toxic, oxidizing, corrosive, n.o.s. *Inhalation Hazard Zone D*.	2.3	UN3306		2.3, 5.1, 8	4	None	302, 305	314, 315	Forbidden	Forbidden	D	40, 89, 90
G	Compressed gas, toxic, oxidizing, n.o.s. *Inhalation Hazard Zone B*.	2.3	UN3303		2.3, 5.1	2, B9, B14	None	302, 305	314, 315	Forbidden	Forbidden	D	40
G	Compressed gas, toxic, oxidizing, n.o.s. *Inhalation Hazard Zone C*.	2.3	UN3303		2.3, 5.1	3, B14	None	302, 305	314, 315	Forbidden	Forbidden	D	40
	*		*	*	*		*	*	*				
	Gas sample, non-pressurized, toxic, n.o.s., *not refrigerated liquid*.	2.3	UN3169		2.3	6	306	302, 304	None	Forbidden	1 L	D	
	*		*	*	*		*	*	*				
G	Liquefied gas, toxic, corrosive, n.o.s. *Inhalation Hazard Zone A*.	2.3	UN3308		2.3, 8	1	None	192	245	Forbidden	Forbidden	D	40
G	Liquefied gas, toxic, corrosive, n.o.s. *Inhalation Hazard Zone B*.	2.3	UN3308		2.3, 8	2, B9, B14	None	304	314, 315	Forbidden	Forbidden	D	40
G	Liquefied gas, toxic, corrosive, n.o.s. *Inhalation Hazard Zone C*.	2.3	UN3308		2.3, 8	3, B14	None	304	314, 315	Forbidden	Forbidden	D	40
G	Liquefied gas, toxic, corrosive, n.o.s. *Inhalation Hazard Zone D*.	2.3	UN3308		2.3, 8	4	None	304	314, 315	Forbidden	Forbidden	D	40
G	Liquefied gas, toxic, flammable, corrosive, n.o.s. *Inhalation Hazard Zone A*.	2.3	UN3309		2.3, 2.1, 8	1	None	192	245	Forbidden	Forbidden	D	17, 40
G	Liquefied gas, toxic, flammable, corrosive, n.o.s. *Inhalation Hazard Zone B*.	2.3	UN3309		2.3, 2.1, 8	2, B9, B14	None	304	314, 315	Forbidden	Forbidden	D	17, 40
G	Liquefied gas, toxic, flammable, corrosive, n.o.s. *Inhalation Hazard Zone C*.	2.3	UN3309		2.3, 2.1, 8	3, B14	None	304	314, 315	Forbidden	Forbidden	D	17, 40
G	Liquefied gas, toxic, flammable, corrosive, n.o.s. *Inhalation Hazard Zone D*.	2.3	UN3309		2.3, 2.1, 8	4	None	304	314, 315	Forbidden	Forbidden	D	17, 40
G	Liquefied gas, toxic, oxidizing, corrosive, n.o.s. *Inhalation Hazard Zone A*.	2.3	UN3310		2.3, 5.1, 8	1	None	192	245	Forbidden	Forbidden	D	40, 89, 90

G	Liquefied gas, toxic, oxidizing, corrosive, n.o.s. *Inhalation Hazard Zone B*.	2.3	UN3310		2.3, 5.1, 8	2, B9, B14	None	304	314, 315	Forbidden	Forbidden	D	40, 89, 90
G	Liquefied gas, toxic, oxidizing, corrosive, n.o.s. *Inhalation Hazard Zone C*.	2.3	UN3310		2.3, 5.1, 8	3, B14	None	304	314, 315	Forbidden	Forbidden	D	40, 89, 90
G	Liquefied gas, toxic, oxidizing, corrosive, n.o.s. *Inhalation Hazard Zone D*.	2.3	UN3310		2.3, 5.1, 8	4	None	304	314, 315	Forbidden	Forbidden	D	40, 89, 90
G	Liquefied gas, toxic, oxidizing, corrosive, n.o.s. *Inhalation Hazard Zone B*.	2.3	UN3307		2.3, 5.1	2, B9, B14	None	304	314, 315	Forbidden	Forbidden	D	40
G	Liquefied gas, toxic, oxidizing, corrosive, n.o.s. *Inhalation Hazard Zone C*.	2.3	UN3307		2.3, 5.1	3, B14	None	304	314, 315	Forbidden	Forbidden	D	40

* * * * * *

6. In § 172.504, paragraph (d) would be revised to read as follows:

§ 172.504 General placarding requirements.

* * * * *

(d) *Exception for empty non-bulk packages.* Except for hazardous materials subject to § 172.505, a non-bulk packaging that contains only the residue of a hazardous material covered by Table 2 of paragraph (e) of this section need not be included in determining placarding requirements.

* * * * *

PART 173—SHIPPERS—GENERAL REQUIREMENTS FOR SHIPMENTS AND PACKAGINGS

7. The authority citation for part 173 would continue to read as follows:

Authority: 49 U.S.C. 5101–5127; 44701; 49 CFR 1.45, 1.53.

8. In § 173.3, a new paragraph (d) would be added to read as follows:

§ 173.3 Packaging and exceptions.

* * * * *

(d) *Emergency transportation of DOT 3A480 or 3AA480 specification cylinders and DOT 105A500 multi-unit tank car tanks.* (1) A DOT 3A480 or DOT 3AA480 specification cylinder containing Chlorine or Sulphur dioxide that has developed a leak in a valve or fusible plug may be repaired temporarily by trained personnel using a Chlorine Institute Kit ''A'' and be transported by private or contract carrier one time, one way from the point of discovery to a proper facility for discharge and examination.

(2) A DOT 106A500 specification multi-unit tank car tank containing Chlorine or Sulphur dioxide that has developed a leak in the valve or fusible plug may be temporarily repaired by trained personnel using a Chlorine Institute Kit ''B'' and be transported by private or contract carrier one time, one way from the point of discovery to a proper facility for discharge and examination.

(3) Training for personnel making the repairs in paragraphs (d)(1) and (d)(2) of this section must include:

(i) Proper use of the devices and tools in the applicable kits;

(ii) Use of respiratory equipment and all other safety equipment; and

(iii) Knowledge of the properties of chlorine and sulphur dioxide.

9. In § 173.12, paragraph (c) introductory text would be revised to read as follows:

§ 173.12 Exceptions for shipments of waste materials.

* * * * *

(c) *Reuse of packagings.* A previously used packaging may be reused for the shipment of waste material transported for disposal or recovery, not subject to the reconditioning and reuse provisions contained in § 173.28 and part 178 of this subchapter, under the following conditions:

* * * * *

10. In § 173.29, paragraph (c) introductory text would be revised to read as follows:

§ 173.29 Empty packagings.

* * * * *

(c) Except for hazardous materials subject to § 172.505, a non-bulk packaging containing only the residue of a hazardous material covered by table 2 of § 172.504 of this subchapter—

* * * * *

11. In § 173.31, a new paragraph (a)(7) would be added and paragraph (b)(2)(ii) and the last sentence of paragraph (b)(5) would be revised to read as follows:

§ 173.31 Use of tank cars.

(a) * * *

(7) A DOT 103 or DOT 104 tank car may continue to be used for the transportation of a hazardous material if it meets the requirements of this subchapter; however, no new construction is authorized.

(b) * * *

(2) * * *

(ii) A single-unit tank car transporting a Division 6.1 PG I or II, or Class 2, 3, or 4 material must have a reclosing pressure relief device. However, a single-unit tank car built before January 1, 1991, and equipped with a non-reclosing pressure relief device may be used to transport a Division 6.1 PG I or II material or a Class 4 liquid provided such materials do not meet the definition of a material poisonous by inhalation.

* * * * *

(b) * * *

(5) * * * Tank cars modified before July 1, 1996, may conform to the bottom-discontinuity protection requirements of Appendix Y, instead of paragraphs E9.00 or E10.00 of the AAR Specifications for Tank Cars.

* * * * *

§ 173.35 [Amended]

12. In § 173.35, in paragraph (b), the wording ''Initial use and reuse of IBCs.'' would be removed and the wording ''*Initial use and reuse of IBCs.* (Also see § 180.352 of this subchapter.)'' would be added in its place.

13. In § 173.50, paragraph (a) would be revised to read as follows:

§ 173.50 Class 1—Definitions.

(a) *Explosive.* For the purposes of this subchapter, an explosive means any substance or article, including a device, which is designed to function by explosion (*i.e.*, an extremely rapid release of gas and heat) or which, by chemical reaction within itself, is able to function in a similar manner even if not designed to function by explosion, unless the substance or article is otherwise classed under the provisions of this subchapter. The term includes a pyrotechnic substance or article, unless the substance or article is otherwise classed under the provisions of this subchapter.

14. In § 173.54, paragraph (c) would be revised to read as follows:

§ 173.54 Forbidden explosives.

* * * * *

(c) A leaking or damaged package or article containing an explosive.

* * * * *

15. In § 173.62, paragraph (c) introductory text and in the Table of Packing Methods, in column 1, Packing Instructions 132(a) and 132(b) would be revised to read as follows:

§ 173.62 Specific packaging requirements for explosives.

* * * * *

(c) Explosives must be packaged in accordance with the following table:

* * * * *

TABLE OF PACKING METHODS

Packing instruction	Inner packagings	Intermediate packagings	Outer packagings

TABLE OF PACKING METHODS—Continued

Packing instruction	Inner packagings	Intermediate packagings	Outer packagings
* *	* *	*	* *
132(a) For articles consisting of closed metal, plastics or fiberboard casings that contain detonating explosives, or consisting of plastics-bonded detonating explosives..	Not necessary	Not necessary	Boxes—steel (4A); aluminum (4B); wood, natural, ordinary (4C1); wood, natural, sift proof walls (4C2); plywood (4D); reconstituted wood (4F); fiberboard (4G); plastics, solid (4H2).
132(b) For articles without closed casings	Receptacles fiberboard metal plastics Sheets paper plastics.	Not necessary	Boxes steel (4A); aluminum (4B); wood, natural, ordinary (4C1); wood, natural, sift proof walls (4C2); plywood (4D); reconstituted wood (4F); fiberboard (4G); plastics, solid (4H2).
* *	* *	*	* *

§ 173.314 [Amended]

16. In § 173.314, the following changes would be made:*a. Paragraph (g)(1) would be removed and reserved;*

b. In paragraph (k), the wording ''safety relief'' would be removed and the wording ''reclosing pressure relief'' added in its place;

c. In paragraph (m), the wording ''safety relief'' would be removed and the wording ''reclosing pressure relief'' added each place it appears, and in the last sentence, the wording ''Safety relief'' would be removed and the wording ''Reclosing pressure relief'' added in its place.

17. In § 173.315, paragraphs (j)(2) and (k)(4) would be revised and in the paragraph (n)(1) table, paragraph (vi) would be added to read as follows:

§ 173.315 Compressed gases in cargo tanks and portable tanks.

* * * * *

(j) * * *

(2) Each container must be equipped with safety devices in compliance with the requirements for safety devices on containers as specified in NFPA 58.

* * * * *

(k) * * *

(4) It must conform to the applicable provisions of NFPA 58, except to the extent that provisions in NFPA 58 are inconsistent with requirements in parts 178 and 180 of this subchapter.

* * * * *

(n) *Emergency discharge control for cargo tank motor vehicles in liquefied compressed gas service.*—(1) * * *

§ 173.315(n)(1)(*)	Material	Delivery service	Required emergency discharge control capability
*	* *	* *	* *
(vi)	Division 2.2 materials with a subsidiary hazard, Division 2.1 materials, and anhydrous ammonia in a cargo tank with a capacity of greater than 13,247.5L (3,500 water gallons).	Both metered delivery and other than metered delivery service.	Paragraph (n)(2) of this section, provided the system operates for both metered and other than metered deliveries; otherwise, paragraphs (n)(2) and (n)(3) of this section.

* * * * *

§ 173.319 [Amended]

18. In § 173.319, paragraph (a)(3) would be removed and reserved.

19. In § 173.320, paragraph (a)(2) would be revised to read as follows:

§ 173.320 Cryogenic liquids, exceptions.

(a) * * *

(2) Subparts A, B, C, D, G and H of part 172, (§§ 174.24 for rail and 177.817 for highway) and in addition, part 172 in its entirety for oxygen.

* * * * *

PART 177—CARRIAGE BY PUBLIC HIGHWAY

20. The authority citation for part 177 would continue to read as follows:

Authority :49 U.S.C. 5101–5127; 49 CFR 1.53.

21. In § 177.834, paragraph (a) would be revised, a new paragraph (b) would be added, and paragraph (g) would be reserved, to read as follows:

§ 177.834 General requirements.

(a) *Packages secured in a motor vehicle.* Any package containing any hazardous material, not permanently attached to a motor vehicle, must be secured against movement, including relative motion between packages, within the vehicle on which it is being transported, under conditions normally incident to transportation. Packages having valves or other fittings must be loaded in a manner to minimize the likelihood of their damage during transportation.

(b) Each package containing a hazardous material bearing package orientation markings prescribed in § 172.312 of this subchapter must be loaded on a transport vehicle or within a freight container in accordance with such markings and must remain in the correct position indicated by the markings during transportation.

* * * * *

(g) [Reserved]

* * * * *

22. In § 177.835, the section heading and paragraph (c)(4)(iii) would be revised to read as follows:

§ 177.835 Class 1 materials.

* * * * *

(c) * * *

(4) * * *

(iii) Division 2.3, Hazard Zone A or Hazard Zone B materials or Division 6.1, PG I, Hazard Zone A materials, or

* * * * *

23. In § 177.837, the section heading and paragraph (a) would be revised to read as follows:

§ 177.837 Class 3 materials.

* * * * *

(a) *Engine stopped.* Unless the engine of a cargo tank motor vehicle is to be used for the operation of a pump, Class 3 material may not be loaded into, or on, or unloaded from any cargo tank motor vehicle while the engine is running. The diesel engine of a cargo tank motor vehicle may be left running during the loading and unloading of a Class 3 material if the ambient temperature is at or below − 12 °C (10 °F).

* * * * *

24. In § 177.841, the section heading and paragraph (e)(1) would be revised to read as follows:

§ 177.841 Division 6.1 and Division 2.3 materials.

* * * * *

(e) * * *

(1) Except as provided in paragraph (e)(3) of this section, bearing or required to bear a POISON or POISON INHALATION HAZARD label or placard in the same motor vehicle with material that is marked as or known to be foodstuffs, feed or edible material intended for consumption by humans or animals unless the poisonous material is packaged in accordance with this subchapter and is:

* * * * *

PART 178—SPECIFICATIONS FOR PACKAGINGS

25. The authority citation for part 178 would continue to read as follows:

Authority: 49 U.S.C. 5101–5127; 49 CFR 1.53.

26. In § 178.45, in paragraph (h) introductory text, the first sentence would be revised to read as follows:

§ 178.45 Specification 3T seamless steel cylinder.

* * * * *

(h) *Ultrasonic examination.* After the hydrostatic test, the cylindrical section of each vessel must be examined in accordance with ASTM Standard E 213 for shear wave and E 114 for straight beam (see § 171.7of this subchapter.)

* * *

* * * * *

PART 179—SPECIFICATION FOR TANK CARS

27. The authority citation for part 179 continues to read as follows:

Authority: 49 U.S.C. 5101–5127; 49 CFR 1.53.

28. In § 179.1, paragraph (a) would be revised to read as follows:

§ 179.1 General.

(a) This part prescribes the specifications for tanks that are to be mounted on or form part of a tank car and which are to be marked with a DOT specification.

* * * * *

29. In 179.3, paragraphs (b) and (c) would be revised to read as follows:

§ 179.3 Procedure for securing approval.

* * * * *

(b) When, in the opinion of the Committee, such tanks or equipment are in compliance with the requirements of this subchapter, the application will be approved.

(c) When such tanks or equipment are not in compliance with the requirements of this subchapter, the Committee may recommend service trials to determine the merits of a change in specifications. Such service trials may be conducted only if the builder or shipper applies for and obtains an exemption.

30. § 179.5 would be amended as follows:

a. In paragraph (a), the wording ''owner, the Department, and'' would be removed and the wording ''owner and'' added in its place;

b. In paragraph (b), the last sentence would be removed;

c. In paragraph (d), in the first sentence, the word ''Secretary'' would be removed and the wording ''Executive Director—Tank Car Safety, AAR'' added in its place and in the second sentence, the wording ''Bureau of Explosives'' would be removed and the wording ''Executive Director—Tank Car Safety, AAR'' added in its place; and

d. Paragraph (c) would be revised to read as follows:

§ 179.5 Certificate of construction.

* * * * *

(c) If the owner elects to furnish service equipment, the owner shall furnish the Executive Director—Tank Car Safety, AAR, a report in prescribed form, certifying that the service equipment complies with all the requirements of the specifications.

* * * * *

31. In § 179.7, paragraph (f) would be revised to read as follows:

§ 179.7 Quality assurance programs.

* * * * *

(f) No tank car facility may manufacture, repair, inspect, test, qualify or maintain tank cars subject to requirements of this subchapter, unless it is operating in conformance with a quality assurance program and written procedures required by paragraphs (a) and (b) of this section.

§ 179.100–13 [Amended]

32. In § 179.100–13, in paragraphs (b) and (c), the wording ''except as prescribed in § 179.102 or § 179.130'' would be removed and the wording ''except as prescribed in §§ 173.314(j), 179.102 or 179.103'' added in its place.

33. In Subpart D, the heading for Subpart D would be revised to read as follows:

Subpart D—Specifications for Non-pressure Tank Car Tanks (Classes DOT–111AW and 115AW)

* * * * *

34. In § 179.200, the section heading would be revised to read as follows:

§ 179.200 General specifications applicable to non-pressure tank car tanks (Class DOT–111).

* * * * *

§ 179.200–14 [Amended]

35. In § 179.200–14, in paragraph (a), the wording '', or in a dome for Class DOT–103 and 104 type cars'' would be removed and paragraph (f) would be removed.

§ 179.200–23 [Amended]

36. In § 179.200–23, the section heading would be amended by removing the word ''safety'' and adding the word ''pressure'' in its place.

§ 179.200–24 [Amended]

37. In § 179.200–24, in the table, column 2 would be amended by removing the wording ''DOT–103–W'' and adding the wording ''DOT 111A'' in its place.

§ 179.201–1 [Amended]

38. In § 179.201–1, the table would be amended by removing the entries for DOT specification 103A–ALW, 103AW, 103ALW, 103ANW, 103BW, 103CW, 103DW, 103EW, 103W, and 104W tank cars.

§ 179.201–2 [Removed and Reserved]

39. Section 179.201–2 would be removed and reserved.

§ 179.201–3 [Amended]

40. In § 179.201–3, in paragraph (b), the wording ''DOT–103B, 103BW, 111A60W5'' would be removed and the wording ''DOT–111A60W5'' added in its place.

41. In § 179.201–6, the following changes would be made:

a. In paragraph (a), the wording ''103ALW, 103DW, 103W,'' would be removed;

b. In paragraph (b), the wording ''103BW,'' would be removed;

c. In paragraph (c), the wording ''DOT–103CW, 103DW, 103EW,'' would

be removed and the word ''DOT'' added in its place; and

d. Paragraph (d) would be removed.

PART 180—CONTINUING QUALIFICATION AND MAINTENANCE OF PACKAGINGS

42. The authority citation for part 180 continues to read as follows:

Authority: 49 U.S.C. 5151–5127; 49 CFR 1.53.

43. In § 180.507, a new paragraph (b)(5) would be added to read as follows:

§ 180.507 Qualification of tank cars.

* * * * *

(b) * * *

(5) Specification DOT 103A–ALW, 103AW, 103ALW, 103ANW, 103BW, 103CW, 103DW, 103EW, and 104W tank cars may continue in use, but new construction is not authorized.

Issued in Washington, DC on January 7, 2003, under authority delegated in 49 CFR part 106.

Robert A. McGuire,

Associate Administrator for Hazardous Materials Safety.

[FR Doc. 03–580 Filed 1–17–03; 8:45 am]

BILLING CODE 4910–60–P

Notices

Federal Register

Vol. 68, No. 13

Tuesday, January 21, 2003

This section of the FEDERAL REGISTER contains documents other than rules or proposed rules that are applicable to the public. Notices of hearings and investigations, committee meetings, agency decisions and rulings, delegations of authority, filing of petitions and applications and agency statements of organization and functions are examples of documents appearing in this section.

DEPARTMENT OF AGRICULTURE

Food and Nutrition Service

Food Distribution Program: Substitution of Donated Beef and Pork With Commercial Beef and Pork

AGENCY: Food and Nutrition Service, USDA.

ACTION: Notice.

SUMMARY: This notice announces the Food and Nutrition Service's (FNS) intent to continue to provide processors with an opportunity to participate in a demonstration project to test program changes in the State processing program. In the demonstration project, selected processors will be allowed to substitute donated beef and pork supplied by the Department of Agriculture (the Department, or USDA) with commercial beef and pork. Commercial beef and pork used in the demonstration project must meet the same specifications required of USDA donated beef and pork. Currently, there are no processors in the demonstration project substituting donated beef and pork with commercial beef and pork. The demonstration project will continue through June 30, 2005; proposals for approval to participate must be submitted to FNS by April 30, 2004. Through the demonstration project, the Department hopes to determine if allowing this type of substitution will result in increased participation of processors, and provide a greater variety of processed end products to recipient agencies in a more timely manner and/or at lower costs.

DATES: The proposals described in this notice may be submitted to FNS through April 30, 2004. The demonstration project runs until June 30, 2005.

ADDRESSES: Proposals should be sent to Director, Food Distribution Division, Food and Nutrition Service, U.S. Department of Agriculture, Park Office Center, Room 504, 3101 Park Center Drive, Alexandria, Virginia 22302–1594.

FOR FURTHER INFORMATION CONTACT: David Brothers, Schools and Institutions Branch, at (703) 305–2668.

SUPPLEMENTARY INFORMATION:

Executive Order 12866

This notice has been determined to be not significant and therefore was not reviewed by the Office of Management and Budget under Executive Order 12866.

Executive Order 12372

This program is listed in the Catalog of Federal Domestic Assistance under 10.550 and is subject to the provisions of Executive Order 12372, which requires intergovernmental consultation with State and local officials (7 CFR Part 3015, Subpart V and final rule-related notices published at 48 FR 29114, June 24, 1983 and 49 FR 22675, May 31, 1984).

Regulatory Flexibility Act

This action is not a rule as defined by the Regulatory Flexibility Act (5 U.S.C. 601–612) and is thus exempt from the provisions of that Act.

Background

Food Distribution Program regulations under 7 CFR 250.30 establish the terms and conditions under which distributing agencies, subdistributing agencies, and recipient agencies may enter into contracts with commercial firms for the processing of USDA donated foods under the State processing program, and prescribe the minimum requirements to be included in such contracts. Section 250.30(f)(1) allows for the full or limited substitution of certain donated food items with commercial foods, with the exception of beef and pork. Processors have stated that the regulations prohibiting the substitution of donated beef and pork reduce the quantity of donated beef and pork they are able to accept and process during a given period. Processors tend to schedule production around deliveries of the donated beef and pork, which decreases their flexibility in providing end products to recipients. Some processors must schedule production around deliveries of donated beef and pork for up to 30 States. Vendors do not always deliver donated beef and pork to the processors as scheduled, causing delays in production. These delays may be alleviated if processors can replace donated beef and pork with their commercial beef and pork.

Demonstration Project

7 CFR 250.30(t) authorizes FNS to waive any of the requirements contained in food distribution regulations under 7 CFR part 250 for the purpose of conducting demonstration projects to test program changes designed to improve the State processing of donated foods. In accordance with this regulatory authority, the Department waived the regulatory restriction under 7 CFR 250.30(f)(1) to conduct a demonstration project from June 30, 2001 to June 30, 2003, that provided the opportunity for selected processors to substitute donated beef and pork with commercial beef and pork in the State processing program. Through the demonstration project, announced on May 30, 2001, at 66 FR 29282, FNS hoped to determine if the waiver of the regulations would increase the number of processors participating in the State processing program, and whether it would increase the quantity of donated beef and pork that each processor accepts for processing. Additionally, FNS sought to determine if the expected increases in competition, and in the quantities of donated beef and pork accepted for processing, would enable processors to function more efficiently, resulting in the production of a greater variety of processed end products more quickly and/or at lower costs. To date, no processors have taken the opportunity to substitute donated beef and pork with commercial beef and pork in the demonstration project.

Continuation of Demonstration Project

The Department has decided to continue to provide processors with the opportunity to participate in the demonstration project through June 30, 2005. Processors approved to participate would be allowed to substitute donated beef and pork with commercial beef and pork. With the exception of the waiver of the prohibition on substitution of donated beef and pork in Section 250.30(f)(1), all regulatory and contract requirements continue to apply, and must be met by processors participating in the demonstration project. Program

regulations relating to the processing of donated meat products apply to the substituted beef and pork in the demonstration project. Section 250.30(g) requires that when donated meat or poultry products are processed, or when any commercial meat or poultry product is incorporated into an end product containing one or more donated foods, all of the processing must be performed in plants under continuous Federal meat or poultry inspection, or continuous State meat or poultry inspection in States certified to have programs at least equal to the Federal inspection programs. In addition to Food Safety Inspection Service (FSIS) inspection, all donated meat and poultry processing must be performed under Agricultural Marketing Service (AMS) acceptance service grading. The following basic requirements will apply to the demonstration project:

- As with the processing of donated beef and pork into end products, AMS graders must monitor the process of substituting commercial beef and pork to ensure program integrity is maintained.
- Only bulk beef and pork delivered by USDA vendors to the processor will be eligible for substitution. No backhauled product will be eligible. (Backhauled product is typically frozen beef and pork in 10 pound chubs delivered to schools which may be sent to processors for further processing at a later time.)
- Commercial beef and pork substituted for donated beef and pork must be certified by an AMS grader as complying with the same product specifications as the donated beef and pork. USDA specifications relative to acceptable tolerance levels for specific microorganisms must be met. The age of any commercial product that is used in substitution for donated food may not exceed six months.
- Substitution of commercial beef and pork may occur in advance of the actual receipt of the donated beef and pork by the processor. Should a processor choose to use the substitution option prior to the purchase of the product by USDA, the processor must assume all risks. Any variation between the amount of commercial beef and pork substituted and the amount of donated beef and pork received by the processor will be adjusted according to guidelines furnished by USDA.
- Any donated beef and pork not used in end products because of substitution must only be used by the processor in other commercial processed products and cannot be sold as an intact unit. However, it may be used to fulfill other USDA contracts provided all terms of the other contract are met.
- The only regulatory provision or State processing contract term affected by the demonstration project is the prohibition on substitution of beef and pork (Section 250.30(f)(1) of the regulations). All other regulatory and contract requirements remain unchanged and must still be met by processors participating in the demonstration project.

Processors must submit proposals to obtain approval for participation in the demonstration project by April 30, 2004. The written proposals must describe how processors plan to carry out the substitution while complying with the above conditions. Proposals must include:

(1) A step-by-step description of how production will be monitored; and,

(2) A complete description of the records that will be maintained for (a) the commercial beef and pork substituted for the donated beef and pork and (b) the disposition of the donated beef and pork delivered by USDA.

All proposals will be reviewed by representatives of FNS' Food Distribution Division, and of the AMS Livestock Division's Commodity Procurement Branch and Grading Branch. Companies approved for participation in the demonstration project will be required to enter into an agreement with FNS and AMS that authorizes the processor to substitute donated beef and pork with commercial bulk beef and pork in fulfilling any current or future State processing contracts during the demonstration project period. However, participation in the demonstration project will not ensure that processors will be awarded any State processing contracts.

Dated: January 13, 2003.

Roberto Salazar,

Administrator, Food and Nutrition Service.

[FR Doc. 03–1253 Filed 1–17–03; 8:45 am]

BILLING CODE 3410–30–P

DEPARTMENT OF AGRICULTURE

Natural Resources Conservation Service

West Fork Kickapoo River Watershed, Vernon County, Wisconsin

AGENCY: Natural Resources Conservation Service.

ACTION: Notice of a Finding of No Significant Impact.

SUMMARY: Pursuant to section 102(2)(c) of the National Environmental Policy Act of 1969; the Council on Environmental Quality Regulations (40 CFR part 1500); and the Natural Resources Conservation Service Regulations (7 CFR part 650); the Natural Resources Conservation Service, U.S. Department of Agriculture, gives notice that an environmental impact statement is not being prepared for the West Fork Kickapoo River Watershed, Vernon County, Wisconsin.

FOR FURTHER INFORMATION CONTACT: Tom Krapf, Water Resources Staff Leader, Natural Resources Conservation Service, 6515 Watts Road, Suite 200, Madison, Wisconsin, 53719. Telephone (608) 276–8732, extension 232.

SUPPLEMENTARY INFORMATION: The environmental assessment of this federally assisted action indicates that the project will not cause significant local, regional, or national impacts on the environment. As a result of these findings, Patricia S. Leavenworth, State Conservationist, has determined that the preparation and review of an environmental impact statement are not needed for this project. The project purpose is flood prevention. The planned work of improvement includes the upgrade of the dam to meet class (c) high hazard criteria.

The Notice of a Finding of No Significant Impact (FONSI) has been forwarded to the Environmental Protection Agency and to various federal, state, and local agencies and interested parties. A limited number of copies of the FONSI are available to fill single copy requests at the above address. Basic data developed during the environmental assessment are on file and may be reviewed by contacting Tom Krapf.

No administrative action on implementation of the proposal will be taken until 30 days after the date of this publication in the **Federal Register**.

Dated: January 4, 2003.

Patricia S. Leavenworth,

State Conservationist.

Finding of No Significant Impact for West Fork Kickapoo River Watershed-Supplement, Vernon County, Wisconsin

Introduction

The West Fork Kickapoo River Watershed is a federally assisted action authorized for planning under Public Law 83–566, the Watershed Protection and Flood Prevention Act. An environmental assessment was undertaken in conjunction with the development of the watershed plan-supplement. This assessment was conducted in consultation with local, state, and federal agencies as well as

with interested organizations and individuals. Data developed during the assessment are available for public review at the following location: U.S. Department of Agriculture, Natural Resources Conservation Service (NRCS), 6515 Watts Road, Suite 200, Madison, WI 53719.

Recommended Action

The size of Klinkner Dam will be increased to meet NRCS class (c) criteria. This will consist of raising the height of the dam, widening the auxiliary spillway, increasing the size of the principal spillway, adding a riser to provide sediment storage, treatment of the abutments if geologic exploration indicates this is needed, and installing a flood warning system.

Effect of Recommended Action

The recommended action will extend the life of Klinkner Dam for an additional 50 years. It will provide increased protection for homes and a school in the hydraulic shadow of the dam and will meet state requirements for a high hazard dam.

The proposed action will have no effect on wetlands.

An initial survey for any cultural resources that may be impacted by the project was conducted. The survey concludes that no significant adverse impacts will occur to cultural resources in the watershed should the plan be implemented. The NRCS has consulted with the State Historic Preservation Office (SHPO) on the effects that planned measures will have on significant cultural resources. Significant cultural resources identified during implementation will be avoided or otherwise preserved in place to the fullest practical extent. If significant cultural resources cannot be avoided or preserved, pertinent information will be recovered before construction. If there is a significant cultural resource discovery during construction, appropriate notice will be made by NRCS to the State Historic Preservation Officer and the National Park Service. Consultation and coordination have been and will continue to be used to ensure the provisions of Section 106 of Public Law 89–665 have been met and to include provisions of Public Law 89–523, as amended by Public Law 93–291. NRCS will take action as prescribed in the NRCS General Manual (GM) 420, Part 401, to protect or recover any significant cultural resources discovered during construction.

No threatened or endangered species in the watershed will be affected by the project.

No wilderness areas are within the watershed.

Little impact will be made on scenic values. Project Sponsors will be required to enact a floodplain-zoning ordinance, which restricts development in the hydraulic shadow of Klinkner Dam prior to any federal reimbursement for relocation expenses.

No significant adverse environmental impacts will result from installations.

Alternatives

The planned action is the most practical means of protecting the watershed, minimizing the threat to loss of life, and complying with the Wisconsin Department of Natural Resources requirements. The Sponsors considered the following alternatives:

(1) No Action

The No Action alternative was not a viable option, since the dam does not meet the Wisconsin Department of Natural Resources dam hazard classification criteria.

(2) Structural and Non-Structural Rehabilitation

This alternative would relocate the four homes and a school located in the hydraulic shadow of the dam. The dam would also need to be upgraded to meet current class ''a'' requirements.

(3) Structural Rehabilitation

This is the recommended action.

(4) Dam Removal (Decommissioning)

This alternative does not meet the project purpose because it does not reduce the risk of loss of life and it does not maintain flood control or watershed protection, and therefore it was not considered further.

(5) Non-Structural

This alternative consists of removal of the homes and school from the hydraulic shadow but no repairs would be made to the dam. Under this alternative the dam would fail and all flood control and watershed protection afforded by the dam would be lost. Therefore it was not considered further.

Consultation and Public Participation

Copies of the Plan Supplement have been sent out to the single point of contact for the State of Wisconsin, Wisconsin Department of Natural Resources, Wisconsin Department of Agriculture, Trade, and Consumer Protection, Wisconsin Department of Emergency Government, U.S. Fish and Wildlife Service, U.S. Forest Service, U.S. Environmental Protection Agency, U.S. Army Corps of Engineers, the Wisconsin State Clearinghouse, and the West Central Regional Planning Commission. The document was distributed to American Indian Tribes that have expressed interest in consulting with federal agencies in projects in Vernon County. The project sponsor, Vernon County, has met with the Amish community leaders to discuss the project. The Amish have a school located in the hydraulic shadow of the dam.

A scoping meeting was advertised and held on December 10, 2001 and interdisciplinary efforts were used in the planning process. In addition to the general public, one federal agency (NRCS), two state agencies (DNR, SHPO), and three county agencies (Land Conservation Department, County Zoning Office, County Administration Department), and local conservation organizations were invited to participate in the scoping and planning process.

Specific consultation was conducted with the State Historic Preservation Officer and the county historical society concerning cultural resources in the watershed.

The environmental assessment was transmitted to all participating and interested agencies, groups, and individuals for review and comment on September 15, 2002. Public meetings were held as needed to keep all interested parties informed of the study progress and to obtain public input to the plan and environmental evaluation.

Agency consultation and public participation to date have shown no unresolved conflicts with the implementation of the selected plan.

Conclusion

The Environmental Assessment summarized above indicates that this Federal action will not cause significant local, regional, or national impacts on the environment. Therefore, based on the above findings, I have determined that an environmental impact statement for the West Fork Kickapoo River Watershed Plan Supplement is not required.

Dated: January 4, 2003.

Patricia S. Leavenworth,

State Conservationist.

[FR Doc. 03–1185 Filed 1–17–03; 8:45 am]

BILLING CODE 3410–16–P

DEPARTMENT OF AGRICULTURE

Rural Business-Cooperative Service

Maximum Portion of Guarantee Authority Available for Fiscal Year 2003 From Carryover and Recovered Funds

AGENCY: Rural Business-Cooperative Service, USDA.

ACTION: Notice.

SUMMARY: As set forth in 7 CFR part 4279, subpart B, each fiscal year the Agency shall establish a limit on the maximum portion of guarantee authority available for that fiscal year that may be used to guarantee loans with a guarantee fee of 1 percent or guaranteed loans with a guarantee percentage exceeding 80 percent. This notice covers only fiscal year (FY) 2002 carryover and recovered funds. Once FY 2003 appropriated funds are apportioned, a second notice will be published for those funds.

Allowing the guarantee fee to be reduced to 1 percent or exceeding the 80 percent guarantee on certain guaranteed loans that meet the conditions set forth in 7 CFR 4279.107 and 4279.119 will increase the Agency's ability to focus guarantee assistance on projects which the Agency has found particularly meritorious, such as projects in rural communities that remain persistently poor, experience long-term population decline and job deterioration, are experiencing trauma as a result of natural disaster, or are experiencing fundamental structural changes in the economic base.

Not all of the available Business and Industry (B&I) Guaranteed Loan program funding authority for FY 2002 was used; consequently, this and recovered funding authority for approved B&I Guaranteed Loans which did come to fruition are now apportioned and available for use. Not more than 12 percent of the Agency's quarterly apportioned carryover and recovered guarantee authority will be reserved for loan requests with a guarantee fee of 1 percent and not more than 15 percent of the Agency quarterly apportioned carryover and recovered guarantee authority will be reserved for guaranteed loan requests with a guaranteed percentage exceeding 80 percent. Once the above quarterly limits have been reached, all additional loans guaranteed with carryover and recovered funds during the remainder of that quarter will require a 2 percent guarantee fee and not exceed an 80 percent guarantee limit. As an exception to this paragraph and for the purposes of this notice, loans developed by the North American Development Bank Community Adjustment and Investment Program (CAIP) will not count against the 15 percent limit. Up to 50 percent of CAIP funds may be used for loan requests with a guaranteed percentage exceeding 80 percent.

Written requests by the Rural Development State Office for approval of a guaranteed loan with a 1 percent guarantee fee or a guaranteed loan exceeding 80 percent must be forwarded to the National Office, Attn: Director, Business and Industry Division, for review and consideration prior to obligation of the guaranteed loan. The Administrator will provide a written response to the State Office confirming approval or disapproval of the request.

EFFECTIVE DATE: January 21, 2003.

FOR FURTHER INFORMATION CONTACT: Fred Kieferle, Processing Branch Chief, Business and Industry Division, Rural Business-Cooperative Service, USDA, Stop 3224, 1400 Independence Avenue, SW., Washington, DC 20250–3224, telephone (202) 720–7818.

SUPPLEMENTARY INFORMATION: This action has been reviewed and determined not to be a rule or regulation as defined in Executive Order 12866.

Dated: January 13, 2003.

John Rosso,

Administrator, Rural Business-Cooperative Service.

[FR Doc. 03–1226 Filed 1–17–03; 8:45 am]

BILLING CODE 3410–XY–P

DEPARTMENT OF COMMERCE

International Trade Administration

Environmental Technologies Trade Advisory Committee (ETTAC)

AGENCY: International Trade Administration, U.S. Department of Commerce.

ACTION: Notice of open meeting.

Date: February 21, 2003.

Time: 9 a.m. to 12 p.m and 2:30 p.m to 3:30 p.m.

Place: U.S. Department of Commerce, 14th Street and Constitution Avenue, NW., Washington, DC 20230, Room 4830 (Room 3407 has also been reserved as a backup).

SUMMARY: The Environmental Technologies Trade Advisory Committee (ETTAC) will hold a plenary meeting on February 21, 2003 at the U.S. Department of Commerce.

The ETTAC will discuss administrative and trade issues including the status of trade negotiations in regards to environmental technologies trade liberalization and recent management changes within the U.S.-Asia Environmental Partnership Program (USAEP). Time will be permitted for public comment. The meeting is open to the public.

Written comments concerning ETTAC affairs are welcome anytime before or after the meeting. Minutes will be available within 30 days of this meeting.

The ETTAC is mandated by Public Law 103–392. It was created to advise the U.S. government on environmental trade policies and programs, and to help it to focus its resources on increasing the exports of the U.S. environmental industry. ETTAC operates as an advisory committee to the Secretary of Commerce and the interagency Environmental Trade Working Group (ETWG) of the Trade Promotion Coordinating Committee (TPCC). ETTAC was originally chartered in May of 1994. It was most recently rechartered until May 30, 2004.

For further information phone Corey Wright, Office of Environmental Technologies Industries (ETI), International Trade Administration, U.S. Department of Commerce at (202) 482–5225. This meeting is physically accessible to people with disabilities. Requests for sign language interpretation or other auxiliary aids should be directed to ETI.

Dated: January 13, 2003.

Carlos F. Montoulieu,

Director, Office of Environmental Technologies Industries.

[FR Doc. 03–1227 Filed 1–17–03; 8:45 am]

BILLING CODE 3510–DR–P

DEPARTMENT OF COMMERCE

National Oceanic and Atmospheric Administration

[I.D. 010203C]

Marine Mammals; File Nos. 473–1700, 545–1488, 662–1661 and 1039–1699

AGENCY: National Marine Fisheries Service, National Oceanic and Atmospheric Administration (NOAA), Commerce.

ACTION: Receipt of applications for new permits and permit amendments.

SUMMARY: Notice is hereby given that the following individuals/organizations have applied in due form for a permit or permit amendment to take humpback whales (*Megaptera novaeangliae*), killer whales (*Orcinus orca*), sperm whales (*Physeter macrocephalus*), fin whales (*Balaenoptera physalis*), minke whales (*Balaenoptera acutorostrata*), gray

whales (*Eschrichtius robustus*), Baird's beaked whales (*Berardius bairdii*), Cuvier's beaked whales (*Ziphius cavirostris*), Stejneger's beaked whales (*Mesoplodon stejnergeri*), harbor porpoise (*Phocoena phocoena*), Dall's porpoise (*Phocoenoides dalli*), harbor seals (*Phoca vitulina*), Pacific white-sided dolphins (*Lagenorhynchus obliquidens*), Northern fur seals (*Callorhinus ursinus*), Steller sea lions (*Eumetopias jubatus*), false killer whales (*Pseudorca crassidens*), pygmy killer whales (*Feresa attenuate*), pilot whales (*Globicephala macrorhynchus*), melon-headed whales (*Peponocephala electra*), bottlenose dolphins (*Tursiops truncatus*), spinner dolphins (*Stenella longirostris*), rough-toothed dolphins (*Steno bredanenis*), and/or spotted dolphins (*Stenella attenuata*) for the purposes of scientific research: Janice Straley, Assistant Professor of Marine Biology, University of Southeast Alaska, 1332 Seward Avenue, Sitka, AK 99835–9498, (PI: Jan Straley); North Gulf Oceanic Society, 60920 Mary Allen Avenue, Homer, AK 99603, (PI: Craig Matkin); Ms. Dena Matkin, Box 22, Gustavus, AK 99826, (PI: Dena Matkin); and Ms. Ann Zoidis, Marine Mammal Biologist, Allied Whale, 11 Des Isle Ave., PO Box 885, Bar Harbor, ME 04609, (PI: Ann Zoidis).

ADDRESSES: The permit applications, amendment requests and related documents are available for review upon written request or by appointment in the following office(s):

Permits, Conservation and Education Division, Office of Protected Resources, NMFS, 1315 East-West Highway, Room 13705, Silver Spring, MD 20910, (301)713–2289, (all applications);

Protected Species Coordinator, Pacific Area Office, NMFS, 1601 Kapiolani Blvd., Rm, 1110, Honolulu, HI 96814–4700; phone (808)973–2935; fax (808)973–2941, (file no. 1039–1699 only); and

Alaska Region, NMFS, P.O. Box 21668, Juneau, AK 99802–1668, (907)586–7221 (file nos. 473–1700, 545–1488 and 662–1661 only).

FOR FURTHER INFORMATION CONTACT: Jill Lewandowski or Lynne Barre, (301) 713–2289.

SUPPLEMENTARY INFORMATION: The subject permits and amendments are requested under the authority of the Marine Mammal Protection Act of 1972, as amended (MMPA; 16 U.S.C. 1361 *et seq.*), the Regulations Governing the Taking and Importing of Marine Mammals (50 CFR part 216), the Endangered Species Act of 1973, as amended (ESA; 16 U.S.C. 1531 *et seq.*), the regulations governing the taking, importing, and exporting of endangered and threatened species (50 CFR 222–226), and the Fur Seal Act of 1966, as amended (16 U.S.C. 1151 *et seq.*).

Janice Straley (file no. 473–1700) requests a five-year scientific research permit to collect long term population data on humpback whales, predation data on killer whales and longline fishing gear depredation by sperm whales. The permit applicant requests takes by close approach for: (1) photo-identification, behavioral observation, biopsy sampling, suction cup tagging for CRITTERCAM and incidental harassment of sperm whales; (2) photo-identification, behavioral observation, biopsy sampling, collection of dead parts following killer whale predation events and incidental harassment of humpback whales, gray whales, minke whales and fin whales; (3) photo-identification, behavioral observation, biopsy sampling and incidental harassment of killer whales; and (4) collection of dead parts following killer whale predation events of additional species of harbor porpoise, Dall's porpoise, Pacific white-sided dolphin, Northern fur seal, Steller sea lion and harbor seal. All research will take place in Alaska waters. This is a continuation of studies authorized under Permit No. 473–1433–04.

The North Gulf Oceanic Society (PI: Craig Matkin) is requesting an amendment to Permit No. 545–1488–01 which authorizes the take by close approach for photo-identification, behavioral observation and incidental harassment of killer whales for the purposes of population analyses and predation studies. This permit also authorizes the collection of dead parts available after killer whale predation events from the following species: Steller sea lion, humpback whale, minke whale, gray whale, harbor porpoise, Dall's porpoise, harbor seal, Pacific white-sided dolphin and Northern fur seal. Research activities take place in Alaska waters, and the permit expires on March 31, 2004.

The permit amendment request (file no. 545–1488) would add the deployment by close approach of short-term radio, satellite, acoustic recording, and underwater video tags and biopsy sampling on the following species: killer whale, gray whale, harbor porpoise, Dall's porpoise, Pacific white-sided dolphin, Baird's beaked whale, Cuvier's beaked whale and Stejneger's beaked whales. The purpose of the amendment, as noted in the application, is to examine diving behavior, feeding, and movements of whales and to obtain information on elusive and rarely studied species.

Dena Matkin (file no. 662–1661) requests a five-year scientific research permit to continue long-term population and predation studies of killer whales and opportunistic population studies of humpback whales in Alaska waters by close approach for photo-identification and behavioral observation. The applicant also requests authorization to continue collecting dead parts following killer whale predation events from the following species: Steller sea lion, humpback whale, minke whale, gray whale, harbor porpoise, Dall's porpoise, harbor seal, Pacific white-sided dolphin and Northern fur seal. This research has been previously authorized under Permit No. 662–1345 which expires on May 31, 2003.

Ann Zoidis (file no. 1039–1700) requests a five-year scientific research permit to study social sound production in humpback whales in the waters of Kauai, Maui and the Big Island, Hawaii. The applicant requests takes of humpback whales by close approach for photo-identification and behavioral observation (above and below water), underwater passive acoustic recordings and incidental harassment. During these humpback whale studies, the applicant also requests take authorizations for underwater passive acoustic recordings and incidental harassment of the following species: false killer whale, pygmy killer whale, pilot whale, melon-headed whale, bottlenose dolphin, spinner dolphin, rough-toothed dolphin, and spotted dolphin.

In compliance with the National Environmental Policy Act of 1969 (42 U.S.C. 4321 *et seq.*), an initial determination has been made that the activities proposed are categorically excluded from the requirement to prepare an environmental assessment or environmental impact statement.

Written comments or requests for a public hearing on these applications should be mailed to the Chief, Permits, Conservation and Education Division, F/PR1, Office of Protected Resources, NMFS, 1315 East-West Highway, Room 13705, Silver Spring, MD 20910. Those individuals requesting a hearing should set forth the specific reasons why a hearing on this particular request would be appropriate.

Comments may also be submitted by facsimile at (301)713–0376, provided the facsimile is confirmed by hard copy submitted by mail and postmarked no later than the closing date of the comment period. Please note that comments will not be accepted by e-mail or by other electronic media.

Concurrent with the publication of this notice in the **Federal Register**, NMFS is forwarding copies of this

application to the Marine Mammal Commission and its Committee of Scientific Advisors.

Dated: January 13, 2003.

Stephen L. Leathery,

Chief, Permits, Conservation and Education Division, Office of Protected Resources, National Marine Fisheries Service.

[FR Doc. 03–1251 Filed 1–17–03; 8:45 am]

BILLING CODE 3510–22–S

DEPARTMENT OF DEFENSE

Department of the Navy

Meeting of the Board of Advisors to the Superintendent, Naval Postgraduate School

AGENCY: Department of the Navy, DOD.

ACTION: Notice of open meeting.

SUMMARY: The purpose of the meeting is to elicit the advice of the board on the Naval Service's Postgraduate Education Program. The board examines the effectiveness with which the Naval Postgraduate School is accomplishing its mission. To this end, the board will inquire into the curricula, instruction, physical equipment, administration, state of morale of the student body, faculty, and staff; fiscal affairs; and any other matters relating to the operation of the Naval Postgraduate School as the board considers pertinent. In order to further the collaborative exchange and partnership between the Naval Postgraduate School and the Air Force Institute of Technology (AFIT), AFIT and the Air University's Board of Visitors will attend a joint session on January 30, 2003. This meeting will be open to the public.

DATES: The meetings will be held on Wednesday, January 29, 2003, from 8 a.m. to 4 p.m. and on Thursday, January 30, 2003, from 8 a.m. to 2 p.m. All written comments regarding this meeting should be received by January 24, 2003, and be directed to Superintendent, Naval Postgraduate School (Attn: Jaye Panza), 1 University Circle, Monterey, CA 92943 or by fax (831) 656–3145.

ADDRESSES: The meetings will be held at the Naval Postgraduate School, Herrmann Hall, 1 University Circle, Monterey, CA.

FOR FURTHER INFORMATION CONTACT: Mrs. Jaye Panza, Naval Postgraduate School, 1 University Circle, Monterey, CA, 93943–5000, telephone number (831) 656–2514.

Dated: January 14, 2003.

R.E. Vincent II,

Lieutenant Commander, Judge Advocate General's Corp, U.S. Navy, Federal Register Liaison Officer.

[FR Doc. 03–1300 Filed 1–17–03; 8:45 am]

BILLING CODE 3810–FF–U

DEPARTMENT OF EDUCATION

State Flexibility Program

AGENDA: Office of Elementary and Secondary Education, Department of Education.

ACTION: Notice amending eligibility requirements and extending application deadline.

SUMMARY: Under the State Flexibility (''State-Flex'') Program, the Secretary will competitively grant State-Flex authority to up to seven State educational agencies (SEAs), permitting them to (1) consolidate certain Federal education funds that are provided for State-level activities and State administration and use those funds for any educational purpose authorized under the Elementary and Secondary Education Act (ESEA) in order to meet the State's definition of adequate yearly progress (AYP) and advance the education priorities of the State and its local educational agencies (LEAs); and (2) specify how LEAs in the State will use funds allocated under section 5112(a) (State Grants for Innovative Programs) of the ESEA. In addition, an SEA with State-Flex authority must enter into performance agreements with at least four, but no more than ten, LEAs (at least half of which must be high-poverty LEAs), giving those LEAs the flexibility to consolidate certain Federal education funds and to use those funds for any educational purpose permitted under the ESEA in order to meet the State's definition of AYP and specific, measurable goals for improving student achievement and narrowing achievement gaps.

In this notice, we are (1) amending the State-Flex eligibility requirements consistent with the recently announced requirements for submission of accountability plans under Title I of the ESEA and (2) extending the deadline for eligible SEAs to apply to participate in the State-Flex program.

Application Deadline: February 28, 2003.

Eligible Applicants: To be eligible to participate in this State-Flex competition, an SEA must have submitted, by January 31, 2003, its accountability workbook under Title I of the ESEA.

SUPPLEMENTARY INFORMATION: On October 11, 2002, we published in the **Federal Register** a notice inviting applications for State flexibility authority (67 FR 63,394–63,395) and a notice of final application requirements, selection criteria, and competition schedule (67 FR 63,390–63,394). At that time, we established a State-Flex application deadline of January 17, 2003 and indicated that to be eligible to apply, an SEA had to either have its AYP definition approved by the Department or submit an assurance that it would provide the Department with a State AYP definition that meets the requirements of section 1111(b)(2) of the ESEA by the AYP deadline established by the Department.

Subsequent to announcing the initial State-Flex competition, the Department published final accountability regulations under Title I and sent to all States an accountability workbook to assist them in submitting their accountability plans for peer review and approval. Because the primary purpose of the State-Flex program is to assist States and affected LEAs in meeting the State's definition of AYP under Title I, in this notice, the Department is amending the State-Flex eligibility requirements to reflect the recently announced steps that States must take to comply with Title I accountability requirements.

Under Title I, States must submit their completed accountability workbook to the Department by January 31, 2003. The workbook will document how respective elements that are required for approval are met by existing State policy, or will be met through a proposed State policy. For each proposed policy that a State lists in its workbook, the State must include a dateline demonstrating the steps that it will take to adopt the policy prior to the May 1, 2003 deadline for final submission of State accountability plans.

Thus, to be eligible to participate in the State-Flex program, a State must have submitted the completed workbook by the deadline established by the Department under Title I.

The Secretary intends to select up to four SEAs for participation in State-Flex in this initial competition. In conducting the competition, the Department will review the quality of State-Flex plans, including the quality of the local performance agreements that are submitted as part of those plans, on the basis of the selection criteria announced in the October 11, 2002 **Federal Register** notice (67 FR 63,390–63,394). If an SEA selected for State-Flex authority has not yet received final

approval of its accountability system as required under Title I, that SEA will receive conditional State-Flex authority. An SEA with conditional State-Flex authority will not be able to exercise its State-Flex authority or implement any portion of its State-Flex plan (including the local performance agreements) unless the Department fully approves the SEA's accountability system by the deadline established under Title I.

The Department will select the additional State-Flex SEAs in a subsequent competition.

FOR FURTHER INFORMATION CONTACT: Ms. Milagros Lanauze. Telephone: (202) 401–0039 or via Internet: *StateFlex@ed.gov*.

If you use a telecommunications device for the deaf (TDD), you may call the Federal Information Relay Service (FIRS) at 1–800–877–8339. Individuals with disabilities may obtain this notice in an alternative format (*e.g.*, Braille, large print, audiotape, or computer diskette) on request to the contact person listed above.

APPLICATIONS: You may obtain a copy of the application on the Department's Web site at: *http://www.ed.gov/GrantApps/#stateflex*.

You may also obtain a copy of the application from the contact person identified under **FOR FURTHER INFORMATION CONTACT**.

Electronic Access to This Document

You may view this document, as well as other Department of Education documents published in the **Federal Register** in text or Adobe Portable Document Format (PDF) on the Internet at the following site: *http://www.ed.gov/legislation/FedRegister*.

To use PDF you must have Adobe Acrobat Reader, which is available free at this site. If you have questions about using PDF, call the U.S. Government Printing Office (GPO), toll-free, at 1–888–293–6498; or in the Washington DC, area at (202) 512–1530.

Note: The official version of this document is the document published in the **Federal Register**. Free Internet access to the official version of the **Federal Register** and the Code of Federal Regulations is available on GPO access at: *http://www.access.gpo.gov/nara/index.html*.

Program Authority: Sections 6141 through 6144 of the ESEA, as amended by the No Child Left Behind Act of 2001 (P.L. 107–110).

Dated: January 16, 2003.

Eugene W. Hickok,

Under Secretary.

[FR Doc. 03–1373 Filed 1–16–03; 2:22 pm]

BILLING CODE 4000–01–P

DEPARTMENT OF ENERGY

[Docket No. EA–275]

Application to Export Electric Energy; NorthPoint Energy Solutions Inc.

AGENCY: Office of Fossil Energy, DOE.

ACTION: Notice of application.

SUMMARY: NorthPoint Energy Solutions Inc. (''NorthPoint'') has applied for authority to transmit electric energy from the United States to Canada pursuant to section 202(e) of the Federal Power Act.

DATES: Comments, protests or requests to intervene must be submitted on or before February 20, 2003.

ADDRESSES: Comments, protests or requests to intervene should be addressed as follows: Office of Coal & Power Import/Export (FE–27), Office of Fossil Energy, U.S. Department of Energy, 1000 Independence Avenue, SW, Washington, DC 20585–0350 (FAX 202–287–5736).

FOR FURTHER INFORMATION CONTACT: Rosalind Carter (Program Office) 202–586–7983 or Michael Skinker (Program Attorney) 202–586–2793.

SUPPLEMENTARY INFORMATION: Exports of electricity from the United States to a foreign country are regulated and require authorization under section 202(e) of the Federal Power Act (FPA) (16 U.S.C. 824a(e)).

On December 3, 2002, the Office of Fossil Energy (FE) of the Department of Energy (DOE) received an application from NorthPoint to transmit electric energy from the United States to Canada. NorthPoint is a corporation organized and existing under the Business Corporation Act of Saskatchewan, having its principal place of business in Regina, Saskatchewan, Canada. The sole shareholder of Northpoint is Saskatchewan Power Corporation (''SaskPower''), a Provincial Crown Corporation of the Government of Saskatchewan. NorthPoint does not own or control any electric power generation or transmission facilities and does not have a franchised electric power service area in the United States.

NorthPoint will purchase the power to be exported from electric utilities and federal power marketing agencies within the United States. The exported electricity will be delivered to Canada over the existing international transmission facilities owned by Basin Electric Power Cooperative, Bonneville Power Administration, Citizens Utilities Co., International Transmission Company, Eastern Maine Electric Cooperative, Joint Owners of the Highgate Project, Long Sault, Inc., Maine Electric Power Company, Maine Public Service Company, Minnesota Power and Light Inc., Minnkota Power Cooperative, New York Power Authority, Niagara Mohawk Power Corporation, Northern States Power, and Vermont Electric Transmission Company. The construction, operation, maintenance, and connection of each of the international transmission facilities to be utilized by NorthPoint, as more fully described in the application, has previously been authorized by a Presidential permit issued pursuant to Executive Order 10485, as amended.

Procedural Matters

Any person desiring to become a party to this proceeding or to be heard by filing comments or protests to this application should file a petition to intervene, comment or protest at the address provided above in accordance with §§ 385.211 or 385.214 of the FERC's Rules of Practice and Procedures (18 CFR 385.211, 385.214). Fifteen copies of each petition and protest should be filed with the DOE on or before the date listed above.

Comments on the NorthPoint application to export electric energy to Canada should be clearly marked with Docket EA–275. Additional copies are to be filed directly with Debra L. McAllister, Senior Legal Counsel, NorthPoint Energy Solutions Inc., 2025 Victoria Avenue, Regina, Saskatchewan, Canada S4P 0SI *AND* Stan Berman and Todd Glass, Heller Ehrman White & McAuliffe LLP, 701 Fifth Avenue, Seattle, WA 98104..

A final decision will be made on this application after the environmental impacts have been evaluated pursuant to the National Environmental Policy Act of 1969, and a determination is made by the DOE that the proposed action will not adversely impact on the reliability of the U.S. electric power supply system.

Copies of this application will be made available, upon request, for public inspection and copying at the address provided above or by accessing the Fossil Energy Home Page at http://www.fe.doe.gov. Upon reaching the Fossil Energy Home page, select ''Regulatory Programs,'' then ''Electricity Regulation,'' and then ''Pending Proceedings'' from the options menus.

Issued in Washington, DC, on January 13, 2003.

Anthony J. Como,

Deputy Director, Electric Power Regulation, Office of Coal & Power Import/Export, Office of Coal & Power Systems, Office of Fossil Energy.

[FR Doc. 03–1216 Filed 1–17–03; 8:45 am]

BILLING CODE 6450–01–P

DEPARTMENT OF ENERGY

Federal Energy Regulatory Commission

[Docket No. RP00–445–005]

Alliance Pipeline L.P.; Notice of Compliance Filing

January 14, 2003.

Take notice that on January 8, 2003, Alliance Pipeline L.P. (Alliance) tendered for filing as part of its FERC Gas Tariff, Original Volume No. 1, Second Substitute Second Revised Sheet No. 12, proposed to be effective January 1, 2003.

Alliance states that it provides firm service under Rate Schedule FT–1 for its existing shippers, all of whom have agreed to pay negotiated rates. The shippers' negotiated rate agreements provide that changes in Alliance's costs will be reflected in its negotiated rates from time to time. Sheet Nos. 11–14 of Alliance's FERC Gas Tariff set forth the essential elements of its Rate Schedule FT–1 negotiated rate transactions. On November 27, 2002, Alliance filed proposed revised tariff sheets to reflect changes made to the rates charged under its negotiated rate agreements, as the results of changes in its costs.

Subsequently, Alliance states that it discovered it inadvertently had omitted a negotiated rate transaction with GCRL Marketing Ltd. (GCRL), on Second Revised Sheet No. 12. Accordingly, on December 17, 2002, Alliance filed Substitute Second Revised Sheet No. 12 to reflect the essential elements of the GCRL transaction. By letter order dated December 20, 2002, the Commission accepted the foregoing tariff sheets to be effective January 1, 2003, except for Second Revised Sheet No. 12 which was rejected as moot.

Alliance states while Substitute Second Revised Sheet No. 12 added the essential elements of the previously omitted GCRL transaction, it neglected to reflect the change made to the rate for GCRL pursuant to the negotiated rate agreement. Accordingly, Alliance states that it is filing Second Substitute Second Revised Sheet No. 12 to state the correct rate for the GCRL transaction.

Alliance states that copies of its filing have been mailed to all customers, state commissions, and other interested parties.

Any person desiring to protest said filing should file a protest with the Federal Energy Regulatory Commission, 888 First Street, NE., Washington, DC 20426, in accordance with Section 385.211 of the Commission's Rules and Regulations. All such protests must be filed in accordance with section 154.210 of the Commission's Regulations. Protests will be considered by the Commission in determining the appropriate action to be taken, but will not serve to make protestants parties to the proceedings. This filing is available for review at the Commission in the Public Reference Room or may be viewed on the Commission's Web site at *http://www.ferc.gov* using the ''FERRIS'' link. Enter the docket number excluding the last three digits in the docket number field to access the document. For Assistance, please contact FERC Online Support at *FERCOnlineSupport@ferc.gov* or toll-free at (866) 208–3676, or TTY, contact (202) 502–8659. The Commission strongly encourages electronic filings. *See* 18 CFR 385.2001(a)(1)(iii) and the instructions on the Commission's Web site under the ''e-Filing'' link.

Dated: January 21, 2003.

Magalie R. Salas,

Secretary.

[FR Doc. 03–1265 Filed 1–17–03; 8:45 am]

BILLING CODE 6717–01–P

DEPARTMENT OF ENERGY

Federal Energy Regulatory Commission

[Docket No. RP02–384–003]

Columbia Gulf Transmission Company; Notice of Compliance Filing

January 14, 2003.

Take notice that on January 8, 2003, Columbia Gulf Transmission Company (Columbia Gulf), tendered for filing as part of its FERC Gas Tariff, Second Revised

Volume No. 1, the following revised tariff sheets with a proposed effective date of August 1, 2002:

Second Substitute Fourth Revised Sheet No. 147

Substitute Original Sheet No. 147A

Columbia Gulf states that it made a filing with the Commission on July 2, 2002 to include a new Section 4.2(i) to Section 4.2 of the General Terms and Conditions (GTC) of its FERC Gas Tariff to permit it, under certain limited circumstances, to reserve capacity that is available for firm service under the provisions of GTC Section 4.2 for future expansion projects. The Commission approved the filing on July 31, 2002 (100 FERC ¶ 61,133 (2002)), subject to modifications. Columbia Gulf filed its first compliance filing in this docket on August 15, 2002, which modified tariff language consistent with the July 31 Order. The Commission issued an order on the compliance filing and rehearing on December 24, 2002 (101 FERC ¶ 61,355). In this order, the Commission accepted the August 15 filing, subject to further modification. The instant filing incorporates the required modifications.

Columbia Gulf states that copies of its filing have been mailed to all firm customers, interruptible customers, and affected state commissions.

Any person desiring to protest said filing should file a protest with the Federal Energy Regulatory Commission, 888 First Street, NE., Washington, DC 20426, in accordance with Section 385.211 of the Commission's Rules and Regulations. All such protests must be filed in accordance with section 154.210 of the Commission's Regulations. Protests will be considered by the Commission in determining the appropriate action to be taken, but will not serve to make protestants parties to the proceedings. This filing is available for review at the Commission in the Public Reference Room or may be viewed on the Commission's Web site at *http://www.ferc.gov* using the ''FERRIS'' link. Enter the docket number excluding the last three digits in the docket number field to access the document. For Assistance, please contact FERC Online Support at *FERCOnlineSupport@ferc.gov* or toll-free at (866) 208–3676, or TTY, contact (202) 502–8659. The Commission strongly encourages electronic filings. *See* 18 CFR 385.2001(a)(1)(iii) and the instructions on the Commission's Web site under the ''e-Filing'' link.

Dated: January 21, 2003.

Magalie R. Salas,

Secretary.

[FR Doc. 03–1267 Filed 1–17–03; 8:45 am]

BILLING CODE 6717–01–P

DEPARTMENT OF ENERGY

Federal Energy Regulatory Commission

[Docket No. RP02–382–003]

Crossroads Pipeline Company; Notice of Compliance Filing

January 14, 2003.

Take notice that on January 3, 2003, Crossroads Pipeline Company (Crossroads), tendered for filing as part of its FERC Gas Tariff, Second Revised Volume No. 1, the following revised tariff sheets with a proposed effective date of August 1, 2002:

Second Substitute First Revised Sheet No. 85
Substitute Original Sheet No. 85A

Crossroads states that it made a filing with the Commission on July 2, 2002 to include a new Section 4.2(i) to Section 4.2 of the General Terms and Conditions (GTC) of its FERC Gas Tariff to permit it, under certain limited circumstances, to reserve capacity that is available for firm service under the provisions of GTC Section 4.2 for future expansion projects. The Commission approved the filing on July 31, 2002 (100 FERC ¶ 61,131 (2002)), subject to modifications. Columbia filed its first compliance filing in this docket on August 15, 2002, which modified tariff language consistent with the July 31 Order. The Commission issued an order on the compliance filing and rehearing on December 19, 2002 (101 FERC ¶ 61,307). In this order, the Commission accepted the August 15 filing, subject to further modification. The instant filing incorporates the required modifications.

Crossroads states that copies of its filing have been mailed to all firm customers, interruptible customers, and affected state commissions.

Any person desiring to protest said filing should file a protest with the Federal Energy Regulatory Commission, 888 First Street, NE., Washington, DC 20426, in accordance with section 385.211 of the Commission's Rules and Regulations. All such protests must be filed in accordance with section 154.210 of the Commission's Regulations. Protests will be considered by the Commission in determining the appropriate action to be taken, but will not serve to make protestants parties to the proceedings. This filing is available for review at the Commission in the Public Reference Room or may be viewed on the Commission's Web site at *http://www.ferc.gov* using the ''FERRIS'' link. Enter the docket number excluding the last three digits in the docket number field to access the document. For Assistance, please contact FERC Online Support at *FERCOnlineSupport@ferc.gov* or toll-free at (866) 208–3676, or TTY, contact (202) 502–8659. The Commission strongly encourages electronic filings. *See* 18 CFR 385.2001(a)(1)(iii) and the instructions on the Commission's Web site under the ''e-Filing'' link.

Protest Date: January 15, 2003.

Magalie R. Salas,

Secretary.

[FR Doc. 03–2166 Filed 1–17–03; 8:45 am]

BILLING CODE 6717–01–P

DEPARTMENT OF ENERGY

Federal Energy Regulatory Commission

[Docket No. RP02–409–002]

MIGC, Inc.; Notice of Compliance Filing

January 14, 2003.

Take notice that on January 9, 2003, MIGC, Inc. (MIGC) tendered for filing as part of its FERC Gas Tariff, First Revised Volume No.1, Sub 1st Rev Second Revised Sheet No. 83, to become effective October 1, 2002.

MIGC asserts that the purpose of this filing is to correct an inadvertent omission in its tariff of a North American Energy Standards Board (NAESB) standard. MIGC proposes to revise its tariff to add language to the capacity release procedures for biddable releases of one year or more which requires transporter to issue a contract within one hour of award posting and provides for nomination beginning at the next available nomination cycle. This revision is consistent with Standard 5.3.2 of Version 5.1 of the NAESB.

Any person desiring to protest said filing should file a protest with the Federal Energy Regulatory Commission, 888 First Street, NE., Washington, DC 20426, in accordance with section 385.211 of the Commission's Rules and Regulations. All such protests must be filed in accordance with section 154.210 of the Commission's Regulations. Protests will be considered by the Commission in determining the appropriate action to be taken, but will not serve to make protestants parties to the proceedings. This filing is available for review at the Commission in the Public Reference Room or may be viewed on the Commission's Web site at *http://www.ferc.gov* using the ''FERRIS'' link. Enter the docket number excluding the last three digits in the docket number field to access the document. For Assistance, please contact FERC Online Support at *FERCOnlineSupport@ferc.gov* or toll-free at (866) 208–3676, or TTY, contact (202) 502–8659. The Commission strongly encourages electronic filings. *See* 18 CFR 385.2001(a)(1)(iii) and the instructions on the Commission's Web site under the ''e-Filing'' link. *Protest Date:* January 22, 2003.

Magalie R. Salas,

Secretary.

[FR Doc. 03–1268 Filed 1–17–03; 8:45 am]

BILLING CODE 6717–01–P

DEPARTMENT OF ENERGY

Federal Energy Regulatory Commission

[Docket No. RP03–229–000]

Tennessee Gas Pipeline Company; Notice of Tariff Filing

January 14, 2003.

Take notice that on January 7, 2003, Tennessee Gas Pipeline Company (Tennessee), tendered for filing as part of its FERC Gas Tariff, Fifth Revised Volume No. 1, the following tariff sheets, with an effective date of March 1, 2003:

Fourth Revised Sheet No. 366.
Second Revised Sheet No. 366A.
Second Revised Sheet No. 366B.

Tennessee's filing requests that the Commission approve certain revisions to Tennessee's FERC Gas Tariff that would result in the subsidization of Tap Facilities construction costs being treated in a manner similar to the current subsidization of Connecting Facilities construction costs pursuant to Tennessee's tariff. Tennessee also proposes revisions intended to simplify the requirements for posting notice of such subsidies on Tennessee's PASSKEY system.

Any person desiring to be heard or to protest said filing should file a motion to intervene or a protest with the Federal Energy Regulatory Commission, 888 First Street, NE., Washington, DC 20426, in accordance with sections 385.214 or 385.211 of the Commission's Rules and Regulations. All such motions or protests must be filed in accordance with section 154.210 of the Commission's Regulations. Protests will be considered by the Commission in determining the appropriate action to be taken, but will not serve to make protestants parties to the proceedings. Any person wishing to become a party must file a motion to intervene. This filing is available for review at the Commission in the Public Reference Room or may be viewed on the Commission's Web site at *http://*

www.ferc.gov using the ''FERRIS'' link. Enter the docket number excluding the last three digits in the docket number field to access the document. For Assistance, please contact FERC Online Support at *FERCOnlineSupport@ferc.gov* or toll-free at (866) 208–3676, or TTY, contact (202) 502–8659. Comments, protests and interventions may be filed electronically via the Internet in lieu of paper. The Commission strongly encourages electronic filings. *See* 18 CFR 385.2001(a)(1)(iii) and the instructions on the Commission's Web site under the ''e-Filing'' link.

Comment Date: January 21, 2003.

Magalie R. Salas,

Secretary.

[FR Doc. 03–1269 Filed 1–17–03; 8:45 am]

BILLING CODE 6717–01–P

DEPARTMENT OF ENERGY

Federal Energy Regulatory Commission

[Docket No. RP03–230–000]

Williston Basin Interstate Pipeline Company; Notice of Tariff Filing

January 14, 2003.

Take notice that on January 8, 2003, Williston Basin Interstate Pipeline Company (Williston Basin), tendered for filing as part of its FERC Gas Tariff, Second Revised Volume No. 1), Seventh Revised Sheet No. 374, to become effective January 8, 2003.

Williston Basin states that it has revised the above-referenced tariff sheet found in Section 48 of the General Terms and Conditions of its Tariff, to rename an existing associated receipt point (Point ID No. 00965). The receipt point is being renamed from (Many Islands Pipe Line-Portal) to (Many Islands-Portal) to be consistent with Williston Basin's internal naming convention of points.

Any person desiring to be heard or to protest said filing should file a motion to intervene or a protest with the Federal Energy Regulatory Commission, 888 First Street, NE., Washington, DC 20426, in accordance with sections 385.214 or 385.211 of the Commission's Rules and Regulations. All such motions or protests must be filed in accordance with section 154.210 of the Commission's Regulations. Protests will be considered by the Commission in determining the appropriate action to be taken, but will not serve to make protestants parties to the proceedings. Any person wishing to become a party must file a motion to intervene. This filing is available for review at the Commission in the Public Reference Room or may be viewed on the Commission's Web site at *http://www.ferc.gov* using the ''FERRIS'' link. Enter the docket number excluding the last three digits in the docket number field to access the document. For Assistance, please contact FERC Online Support at *FERCOnlineSupport@ferc.gov* or toll-free at (866) 208–3676, or TTY, contact (202) 502–8659. Comments, protests and interventions may be filed electronically via the Internet in lieu of paper. The Commission strongly encourages electronic filings. *See* 18 CFR 385.2001(a)(1)(iii) and the instructions on the Commission's Web site under the ''e-Filing'' link.

Dated: January 21, 2003.

Magalie R. Salas,

Secretary.

[FR Doc. 03–1270 Filed 1–17–03; 8:45 am]

BILLING CODE 6717–01–P

DEPARTMENT OF ENERGY

Federal Energy Regulatory Commission

[Docket No. EC03–42–000, *et al.*]

Calpine Energy Services, L.P., *et al.*; Electric Rate and Corporate Filings

January 13, 2003.

The following filings have been made with the Commission. The filings are listed in ascending order within each docket classification.

1. Calpine Energy Services, L.P. CES Marketing, LLC

[Docket No. EC03–42–000]

Take notice that on January 7, 2003, Calpine Energy Services, L.P. (CESLP) and CES Marketing, LLC (CESM) tendered for filing with the Federal Energy Regulatory Commission (Commission) an application under section 203 of the Federal Power Act for approval of the assignment by CESLP to CESM of a wholesale power sales agreement between CESLP and the State of California Department of Water Resources.

Comment Date: January 28, 2003.

2. AES Londonderry, LLC New England Power Company

[Docket No. EC03–43–000]

Take notice that on January 7, 2003, AES Londonderry, LLC (AESL) and New England Power Company (NEP) filed with the Federal Energy Regulatory Commission (Commission) a joint application pursuant to Section 203 of the Federal Power Act for approval of the transfer by AESL to NEP of certain transmission facilities located at a switchyard constructed by AESL in North Litchfield, New Hampshire in connection with the interconnection of a generation facility constructed by AESL in Londonderry, New Hampshire.

AESL and NEP have also requested that the Commission consider and approve the application on an expedited basis and grant waivers of the Commission's regulations so that the transaction may be completed at the earliest possible time on or before January 31, 2003.

AESL and NEP state that a copy of the application has been served on the New Hampshire Public Utilities Commission.

Comment Date: January 28, 2003.

3. ESI Energy, LLC, ESI Multitrade LP, Inc. and Algonquin Power Acquisition Inc.

[Docket No. EC03–44–000]

Take notice that on January 6, 2003, ESI Energy, LLC, ESI Multitrade LP, Inc. and Algonquin Power Acquisition, Inc. filed with the Federal Energy Regulatory Commission (Commission) an application pursuant to section 203 of the Federal Power Act for authorization of a disposition of jurisdictional facilities whereby ESI Energy, LLC will divest, and Algonquin Power Acquisition Inc. will acquire, a 100% interest in ESI Pittsylvania, Inc. which owns a 1% general partner interest in Multitrade of Pittsylvania County, L.P., which owns and operates a 79.5 megawatt wood-burning qualifying small power production facility located in Pittsylvania County, Virginia; and ESI Multitrade LP, Inc. will divest, and Algonquin Power Acquisition Inc. will acquire, a 39% limited partner interest in Multitrade of Pittsylvania County, L.P. Federal Energy Regulatory Commission approval is required for the transaction pursuant to Section 203 of the Federal Power Act and the Public Utility Regulatory Policies Act of 1978 requirements applicable to certain qualifying facilities with a total capacity between 30 MW and 80 MW.

Comment Date: January 27, 2003.

4. California Independent System Operator Corporation Pacific Gas and Electric Company, San Diego Gas & Electric Company

[Docket No. ER98–3760–008, EC96–19–059, and ER96–1663–062]

Take notice that on January 7, 2003, the California Independent System Operator Corporation (ISO) tendered for filing with the Federal Energy Regulatory Commission (Commission) a compliance filing with the

Commission's November 22, 2002 Order on Outstanding Issues Relating to the California Independent System Operator Corporation, 101 FERC ¶ 61,219. The compliance filing revises a number of sections of the ISO's Tariff, Protocols and Transmission Control Agreement, and in accordance with the November 22 Order.

The ISO states that this filing has been served on all entities that are on the official service list for this docket.

Comment Date: January 28, 2003.

5. Progress Energy, Inc. Effingham County Power, LLC MPC Generating, LLC ER96–1618–017, Progress Power Marketing, Inc. Progress Ventures, Inc. Rowan County Power, LLC Walton County Power, LLC

[Docket Nos. ER01–1418–001, ER02–1238–001, ER01–2928–003, ER01–1419–001 and ER01–1310–002]

Take notice that Progress Energy, Inc., on behalf of its subsidiaries, Effingham County Power, LLC, MPC Generating, LLC, Progress Power Marketing, Inc., Progress Ventures, Inc., Rowan County Power, LLC and Walton County Power, LLC, tendered for filing, on January 9, 2003, three-year updates to the subsidiaries market-based rate authority and notices of change in status.

Progress Energy, Inc. states that copies of the filing were served on the North Carolina Utilities Commission, the South Carolina Public Service Commission, the Florida Public Service Commission and the Georgia Public Service Commission.

Comment Date: January 30, 2003.

6. Southern Company Services, Inc.

[Docket No. ER03–390–000]

Take notice that on January 9, 2003, Southern Company Services, Inc., acting on behalf of Georgia Power Company (GPC), filed with the Federal Energy Regulatory Commission (Commission) a Notice of Cancellation of the Interconnection Agreement between Duke Energy Glynn, LLC and GPC (Service Agreement No. 378 under Southern Companies' Open Access Transmission Tariff, Fourth Revised Volume No. 5). An effective date of June 1, 2002 has been requested.

Comment Date: January 30, 2003.

7. Southern Company Services, Inc.

[Docket No. ER03–391–000]

Take notice that on January 9, 2003, Southern Company Services, Inc., acting on behalf of Alabama Power Company (APC), filed with the Federal Energy Regulatory Commission (Commission) a Notice of Cancellation of the Interconnection Agreement between Duke Energy Autauga, LLC and APC (Service Agreement No. 383 under Southern Companies' Open Access Transmission Tariff, Fourth Revised Volume No. 5). An effective date of November 27, 2001 has been requested.

Comment Date: January 30, 2003.

8. Southern Company Services, Inc.

[Docket No. ER03–392–000]

Take notice that on January 9, 2003, Southern Company Services, Inc., acting on behalf of Mississippi Power Company (MPC), filed with the Federal Energy Regulatory Commission (Commission) a Notice of Cancellation of the Interconnection Agreement between International Paper Company and MPC (Service Agreement No. 253 under Southern Companies' Open Access Transmission Tariff, Fourth Revised Volume No. 5). An effective date of June 30, 2002 has been requested.

Comment Date: January 30, 2003.

9. Florida Power Corporation

[Docket No. ER03–393–000]

Take notice that on January 9, 2003, Florida Power Corporation (Florida Power) tendered for filing with the Federal Energy Regulatory Commission (Commission) a Notice of Cancellation for its Electric Rate Schedule FERC No. 133, originally filed in Docket No. ER92–451–000. Florida Power also filed First Revised Rate Schedule FERC No. 185, consistent with the Commission's Order No. 614, to reflect the fact that provisions relating to a construction agreement for the Cabbage Hill point of interconnection have been terminated in accordance with the terms of the construction agreement. In addition, Florida Power states that the terms of an O&M Agreement for a temporary Cabbage Swamp tie have terminated by their terms and have been superseded in previous filings. Florida Power requests an effective date of October 1, 2002.

Florida Power states that a copy of this filing has been served on Tampa Electric, the counter party to the agreements and the relevant state commission. This filing does not represent a change in the terms of service between the parties.

Comment Date: January 30, 2003.

10. Elk Hills Power, LLC

[Docket No. ER03–394–000]

Take notice that on January 9, 2003, Elk Hills Power, LLC (Elk Hills) tendered for filing with the Federal Energy Regulatory Commission (Commission) pursuant to Rule 205, 18 CFR 385.205, a petition for waivers and blanket approvals under various regulations of the Commission and for an order accepting its FERC Electric Tariff No. 1.

Elk Hills states that it intends to sell electric power and ancillary services at wholesale at rates, terms, and conditions to be mutually agreed to with the purchasing party. The Elk Hills tariff provides for the sale of electric energy, capacity and ancillary services at agreed prices.

Comment Date: January 30, 2003.

11. California Independent System Operator Corporation

[Docket No. ER03–395–000]

Take notice that ON January 9, 2003, the California Independent System Operator Corporation (ISO) tendered for filing with the Federal Energy Regulatory Commission (Commission) a Participating Generator Agreement between the ISO and Termoeléctrica de Mexicali S. de R.L. de C.V (TDM) for acceptance by the Commission.

The ISO states that this filing has been served on TDM and the California Public Utilities Commission.

The ISO is requesting waiver of the 60-day notice requirement to allow the Participating Generator Agreement to be made effective December 31, 2002.

Comment Date: January 30, 2003.

12. Florida Power Corporation

[Docket No. ER03–396–000]

Take notice that on January 9, 2003, Florida Power Corporation tendered for filing a Second Revised Electric Rate Schedule FERC No. 65, originally filed with the FPC on July 21, 1965 and most recently refiled in conformance with Order No. 614 in Docket No. ER02–1655–000, to reflect a change in the rate paid for power under its interchange contract with Southeastern Power Administration.

Florida Power Corporation states that a copy of this filing has been served on Southeastern Power Administration, the counter party to the agreements. This filing does not represent a change in any rate charged by Florida Power Corporation.

Comment Date: January 30, 2003.

13. PJM Interconnection, L.L.C.

[Docket No. ER03–397–000]

Take notice that on January 9, 2003, PJM Interconnection, L.L.C. (PJM), submitted for filing a revised interconnection service agreement between PJM and PSEG Power, L.L.C. (PSEG Power). The original agreement is revised to add a development milestone and to include some other minor amendments.

PJM requests an effective date of December 12, 2002 for the revised agreement.

PJM states that copies of this filing were served upon PSEG Power and the state regulatory commissions within the PJM region.

Comment Date: January 30, 2003.

14. Washington County Power, LLC

[Docket No. ER03–398–000]

Take notice that on January 9, 2003, Washington County Power, LLC (Washington) hereby tendered for filing with the Federal Energy Regulatory Commission (Commission) its request for market-based rate (MBR) authority. Washington requests that the Commission make its MBR tariff effective on March 11, 2003, sixty days after the date of this filing.

Comment Date: January 30, 2003.

Standard Paragraph

Any person desiring to intervene or to protest this filing should file with the Federal Energy Regulatory Commission, 888 First Street, NE., Washington, DC 20426, in accordance with Rules 211 and 214 of the Commission's Rules of Practice and Procedure (18 CFR 385.211 and 385.214). Protests will be considered by the Commission in determining the appropriate action to be taken, but will not serve to make protestants parties to the proceeding. Any person wishing to become a party must file a motion to intervene. All such motions or protests should be filed on or before the comment date, and, to the extent applicable, must be served on the applicant and on any other person designated on the official service list. This filing is available for review at the Commission or may be viewed on the Commission's Web site at *http://www.ferc.gov*, using the ''FERRIS'' link. Enter the docket number excluding the last three digits in the docket number field to access the document. For assistance, please contact FERC Online Support at *FERCOnlineSupport@ferc.gov* or toll-free at (866) 208–3676, or for TTY, contact (202) 502–8659. Protests and interventions may be filed electronically via the Internet in lieu of paper; *see* 18 CFR 385.2001(a)(1)(iii) and the instructions on the Commission's Web site under the ''e-Filing'' link. The Commission strongly encourages electronic filings.

Magalie R. Salas,

Secretary.

[FR Doc. 03–1259 Filed 1–17–03; 8:45 am]

BILLING CODE 6717–01–P

DEPARTMENT OF ENERGY

Federal Energy Regulatory Commission

Notice of Application Accepted for Filing and Soliciting Comments, Protests, and Motions to Intervene

January 14, 2003.

Take notice that the following hydroelectric application has been filed with the Commission and is available for public inspection:

a. *Type of Application:* Preliminary Permit.

b. *Project No.:* 12359–000.

c. *Date filed:* September 3, 2002.

d. *Applicant:* Universal Electric Power Corporation.

e. *Name and Location of Project:* The Barren River Lake Dam Hydroelectric Project would be located on the Barren River in Barren County, Kentucky. The proposed project would utilize an existing dam administered by the U.S. Army Corps of Engineers.

f. *Filed Pursuant to:* Federal Power Act, 16 U.S.C. §§ 791(a)–825(r).

g. *Applicant contact:* Mr. Raymond Helter, Universal Electric Power Corporation, 1145 Highbrook Street, Akron, OH 44301, (330) 535–7115.

h. *FERC Contact:* Tom Papsidero, (202) 502–6002.

i. *Deadline for filing comments, protests, and motions to intervene:* 60 days from the issuance date of this notice.

All documents (original and eight copies) should be filed with Magalie R. Salas, Secretary, Federal Energy Regulatory Commission, 888 First Street, NE., Washington, DC 20426. Comments, protests, and interventions may be filed electronically via the Internet in lieu of paper; *see* 18 CFR 385.2001(a)(1)(iii) and the instructions on the Commission's Web site under the ''e-Filing'' link. The Commission strongly encourages electronic filings. Please include the project number (P–12359–000) on any comments or motions filed.

The Commission's rules of practice and procedure require all interveners filing documents with the Commission to serve a copy of that document on each person in the official service list for the project. Further, if an intervener files comments or documents with the Commission relating to the merits of an issue that may affect the responsibilities of a particular resource agency, they must also serve a copy of the document on that resource agency.

j. *Description of Project:* The proposed project, using the Corps' existing Barren River Lake Dam and Reservoir, would consist of: (1) Two proposed 50-foot-long, 4-foot-diameter steel penstocks, (2) a proposed powerhouse containing two generating units with a combined installed capacity of 3.9 megawatts, (3) a proposed 500-foot-long, 14.7-kv transmission line, and (4) appurtenant facilities. The project would operate in a run-of-river mode and would have an average annual generation of 24 GWh.

k. This filing is available for review at the Commission in the Public Reference Room or may be viewed on the Commission's Web site at *http://www.ferc.gov* using the ''FERRIS'' link. Enter the docket number excluding the last three digits in the docket number field to access the document. For assistance, call toll-free 1–866–208–3678 or e-mail *ferconlinesupport@ferc.gov*. For TTY, call (202) 502–8659. A copy is also available for inspection and reproduction at the applicant's address in item g above.

l. Competing Preliminary Permit—Anyone desiring to file a competing application for preliminary permit for a proposed project must submit the competing application itself, or a notice of intent to file such an application, to the Commission on or before the specified comment date for the particular application (*see* 18 CFR 4.36). Submission of a timely notice of intent allows an interested person to file the competing preliminary permit application no later than 30 days after the specified comment date for the particular application. A competing preliminary permit application must conform with 18 CFR 4.30(b) and 4.36.

m. Competing Development Application—Any qualified development applicant desiring to file a competing development application must submit to the Commission, on or before a specified comment date for the particular application, either a competing development application or a notice of intent to file such an application. Submission of a timely notice of intent to file a development application allows an interested person to file the competing application no later than 120 days after the specified comment date for the particular application. A competing license application must conform with 18 CFR 4.30(b) and 4.36.

n. Notice of Intent—A notice of intent must specify the exact name, business address, and telephone number of the prospective applicant, and must include an unequivocal statement of intent to submit, if such an application may be filed, either a preliminary permit application or a development application (specify which type of

application). A notice of intent must be served on the applicant(s) named in this public notice.

o. Proposed Scope of Studies under Permit—A preliminary permit, if issued, does not authorize construction. The term of the proposed preliminary permit would be 36 months. The work proposed under the preliminary permit would include economic analysis, preparation of preliminary engineering plans, and a study of environmental impacts. Based on the results of these studies, the Applicant would decide whether to proceed with the preparation of a development application to construct and operate the project.

p. Comments, Protests, or Motions to Intervene—Anyone may submit comments, a protest, or a motion to intervene in accordance with the requirements of Rules of Practice and Procedure, 18 CFR 385.210, .211, .214. In determining the appropriate action to take, the Commission will consider all protests or other comments filed, but only those who file a motion to intervene in accordance with the Commission's Rules may become a party to the proceeding. Any comments, protests, or motions to intervene must be received on or before the specified comment date for the particular application.

q. Filing and Service of Responsive Documents—Any filings must bear in all capital letters the title ''COMMENTS'', ''NOTICE OF INTENT TO FILE COMPETING APPLICATION'', ''COMPETING APPLICATION'', ''PROTEST'', or ''MOTION TO INTERVENE'', as applicable, and the Project Number of the particular application to which the filing refers. Any of the above-named documents must be filed by providing the original and the number of copies provided by the Commission's regulations to: The Secretary, Federal Energy Regulatory Commission, 888 First Street, NE., Washington, DC 20426. An additional copy must be sent to Director, Division of Hydropower Administration and Compliance, Federal Energy Regulatory Commission, at the above-mentioned address. A copy of any notice of intent, competing application or motion to intervene must also be served upon each representative of the Applicant specified in the particular application.

r. Agency Comments—Federal, state, and local agencies are invited to file comments on the described application. A copy of the application may be obtained by agencies directly from the Applicant. If an agency does not file comments within the time specified for filing comments, it will be presumed to have no comments. One copy of an agency's comments must also be sent to the Applicant's representatives.

Magalie R. Salas,

Secretary.

[FR Doc. 03–1260 Filed 1–17–03; 8:45 am]

BILLING CODE 6717–01–P

DEPARTMENT OF ENERGY

Federal Energy Regulatory Commission

Notice of Application Accepted for Filing and Soliciting Motions to Intervene, Protests, and Comments

January 14, 2003.

Take notice that the following hydroelectric application has been filed with the Commission and is available for public inspection:

a. *Type of Application:* Preliminary Permit.

b. *Project No.:* 12373–000.

c. *Date filed:* September 20, 2002.

d. *Applicant:* MIG Utilities Group, Inc.

e. *Name of Project:* Sand Hollow Hydro Power Project.

f. *Location:* On the Sand Hollow waterway, approximately 2 miles east of the Columbia River, in Grant County, Washington.

g. *Filed pursuant to:* Federal Power Act, 16 U.S.C. §§ 791(a)–825(r)

h. *Applicant Contact:* Kevin Whitener, MIG Utilities Group, Inc., 23 S. Wenatchee Ave., Suite 203, Wenatchee, WA 98801, (509) 662–7197.

i. *FERC Contact:* Regina Saizan, (202) 502–8765.

j. *Deadline for filing comments, protests, and motions to intervene:* 60 days from the issuance date of this notice.

All documents (original and eight copies) should be filed with: Magalie R. Salas, Secretary, Federal Energy Regulatory Commission, 888 First Street, NE., Washington, DC 20426. Comments, protests, and interventions may be filed electronically via the Internet in lieu of paper; *see* 18 CFR 385.2001(a)(1)(iii) and the instructions on the Commission's Web site under the ''e-Filing'' link. The Commission strongly encourages electronic filings. Please include the project number (P–12373–000) on any comments or motions filed.

The Commission's rules of practice and procedure require all interveners filing a document with the Commission to serve a copy of that document on each person in the official service list for the project. Further, if an intervener files comments or documents with the Commission relating to the merits of an issue that may affect the responsibilities of a particular resource agency, they must also serve a copy of the document on that resource agency.

k. *Description of Project:* The proposed project would consist of: (1) A proposed concrete dam, approximately eight feet high by approximately thirty-two feet wide, and an inlet structure; (2) a proposed 48-inch-diameter steel penstock approximately 6,500 feet long that will bifurcate into two separate smaller steel penstocks, (3) a proposed powerhouse containing two turbine/generator units having a total installed capacity of 1 MW, (4) a proposed 1-mile-long, 13.2 kV transmission line, and (5) appurtenant facilities. The project would have an annual generation of 7.2 million kW.

l. This filing is available for review at the Commission in the Public Reference Room or may be viewed on the Commission's Web site at *http://www.ferc.gov* using the ''FERRIS'' link. Enter the docket number excluding the last three digits in the docket number field to access the document. For assistance, call toll-free 1–866–208–3676 or e-mail *ferconlinesupport@ferc.gov*. For TTY, call (202) 502–8659. A copy is also available for inspection and reproduction at the address in item h.

m. Competing Preliminary Permit—Anyone desiring to file a competing application for preliminary permit for a proposed project must submit the competing application itself, or a notice of intent to file such an application, to the Commission on or before the specified comment date for the particular application (*see* 18 CFR 4.36). Submission of a timely notice of intent allows an interested person to file the competing preliminary permit application no later than 30 days after the specified comment date for the particular application. A competing preliminary permit application must conform with 18 CFR 4.30(b) and 4.36.

n. Competing Development Application—Any qualified development applicant desiring to file a competing development application must submit to the Commission, on or before a specified comment date for the particular application, either a competing development application or a notice of intent to file such an application. Submission of a timely notice of intent to file a development application allows an interested person to file the competing application no later than 120 days after the specified comment date for the particular application. A competing license application must conform with 18 CFR 4.30(b) and 4.36.

o. Notice of Intent—A notice of intent must specify the exact name, business address, and telephone number of the prospective applicant, and must include an unequivocal statement of intent to submit if such an application may be filed, either a preliminary permit application or a development application (specify which type of application). A notice of intent must be served on the applicant(s) named in this public notice.

p. Proposed Scope of Studies under Permit—A preliminary permit, if issued, does not authorize construction. The term of the proposed preliminary permit would be 36 months. The work proposed under the preliminary permit would include economic analysis, preparation of preliminary engineering plans, and a study of environmental impacts. Based on the results of these studies, the Applicant would decide whether to proceed with the preparation of a development application to construct and operate the project.

q. Comments, Protests, or Motions to Intervene—Anyone may submit comments, a protest, or a motion to intervene in accordance with the requirements of rules of practice and procedure, 18 CFR 385.210, .211, .214. In determining the appropriate action to take, the Commission will consider all protests or other comments filed, but only those who file a motion to intervene in accordance with the Commission's Rules may become a party to the proceeding. Any comments, protests, or motions to intervene must be received on or before the specified comment date for the particular application.

r. Filing and Service of Responsive Documents—Any filings must bear in all capital letters the title ''COMMENTS'', ''NOTICE OF INTENT TO FILE COMPETING APPLICATION'', ''COMPETING APPLICATION'', ''PROTEST'', ''MOTION TO INTERVENE'', as applicable, and the Project Number of the particular application to which the filing refers. Any of the above-named documents must be filed by providing the original and the number of copies provided by the Commission's regulations to: The Secretary, Federal Energy Regulatory Commission, 888 First Street, NE., Washington, DC 20426. An additional copy must be sent to Director, Division of Hydropower Administration and Compliance, Federal Energy Regulatory Commission, at the above-mentioned address. A copy of any notice of intent, competing application or motion to intervene must also be served upon each representative of the Applicant specified in the particular application.

s. Agency Comments—Federal, state, and local agencies are invited to file comments on the described application. A copy of the application may be obtained by agencies directly from the Applicant. If an agency does not file comments within the time specified for filing comments, it will be presumed to have no comments. One copy of an agency's comments must also be sent to the Applicant's representatives.

Magalie R. Salas,

Secretary.

[FR Doc. 03–1261 Filed 1–17–03; 8:45 am]

BILLING CODE 6717–01–P

DEPARTMENT OF ENERGY

Federal Energy Regulatory Commission

Notice of Non-Project Use of Project Lands and Soliciting Motions to Intervene, Protests, and Comments

January 14, 2003.

Take notice that the following hydroelectric application has been filed with the Commission and is available for public inspection:

a. *Type of Application:* Non-Project Use of Project Lands.

b. *Project No.:* P–2197–058.

c. *Date filed:* October 30, 2002.

d. *Applicant:* Alcoa Power Generating Inc.

e. *Name and Location of Project:* The Yadkin Hydroelectric Project is on the Yadkin/Pee Dee River in Montgomery, Stanley, Davidson, Rowan, and Davie Counties, North Carolina. The Yadkin project contains the following reservoirs: High Rock, Tuckertown, Narrows, and Falls. The project does not occupy any federal lands.

f. *Filed Pursuant to:* Federal Power Act, 16 U.S.C. §§ 791(a)–825(r).

g. *Applicant Contact:* Mr. David R. Poe, LeBoeuf, Lamb, Greene & MacRae, LLP, Suite 1200, 1875 Connecticut Ave., NW., Washington, DC, 20009–5728, (202) 986–8039.

h. *FERC Contact:* Elizabeth Jones (202) 502–8246.

i. Deadline for filing comments, protests, and motions to intervene: February 14, 2003.

All documents (original and eight copies) should be filed with: Magalie R. Salas, Secretary, Federal Energy Regulatory Commission, 888 First Street, NE., Washington, DC 20426. Comments, protests, and interventions may be filed electronically via the Internet in lieu of paper; *see* 18 CFR 385.2001(a)(1)(iii) and the instructions on the Commission's Web site under the ''e-Filing'' link. The Commission strongly encourages electronic filings. Please include the project number (P–2197–058) on any comments or motions filed.

The Commission's rules of practice and procedure require all interveners filing documents with the Commission to serve a copy of that document on each person in the official service list for the project. Further, if an intervener files comments or documents with the Commission relating to the merits of an issue that may affect the responsibilities of a particular resource agency, they must also serve a copy of the document on that resource agency.

j. Description of Application: Alcoa Power Generating, Inc. (Alcoa), licensee for the Yadkin Hydroelectric Project, filed a non-project use of project lands application. In its application, Alcoa proposes to grant a permit to Thomason Development, L.L.C, for the construction of a marina to accommodate 16 watercraft, with 16 additional personal watercraft and for the modification of one preexisting boat launch ramp and one preexisting bulkhead (together, the ''Marina Facilities'') within the Project boundary on High Rock Reservoir. Alcoa proposes to grant a second permit to the River's Edge Homeowners Association for the use and operation of the Marina Facilities.

k. This filing is available for review at the Commission in the Public Reference Room or may be viewed on the Commission's Web site at *http://www.ferc.gov* using the ''FERRIS'' link. Enter the docket number excluding the last three digits in the docket number field to access the document. For assistance, call toll-free 1–866–208–3676 or e-mail *FERCOnlineSupport@ferc.gov* . For TTY, call (202) 502–8659.

l. Comments, Protests, or Motions to Intervene—Anyone may submit comments, a protest, or a motion to intervene in accordance with the requirements of Rules of Practice and Procedure, 18 CFR 385.210, .211, .214. In determining the appropriate action to take, the Commission will consider all protests or other comments filed, but only those who file a motion to intervene in accordance with the Commission's Rules may become a party to the proceeding. Any comments, protests, or motions to intervene must be received on or before the specified comment date for the particular application.

m. Filing and Service of Responsive Documents—Any filings must bear in all capital letters the title ''COMMENTS'', ''NOTICE OF INTENT TO FILE COMPETING APPLICATION'',

''COMPETING APPLICATION'', ''PROTEST'', ''MOTION TO INTERVENE'', as applicable, and the Project Number of the particular application to which the filing refers. Any of the above-named documents must be filed by providing the original and the number of copies provided by the Commission's regulations to: The Secretary, Federal Energy Regulatory Commission, 888 First Street, NE., Washington, DC 20426. An additional copy must be sent to Director, Division of Hydropower Administration and Compliance, Federal Energy Regulatory Commission, at the above-mentioned address. A copy of any notice of intent, competing application or motion to intervene must also be served upon each representative of the Applicant specified in the particular application.

n. Agency Comments—Federal, state, and local agencies are invited to file comments on the described application. A copy of the application may be obtained by agencies directly from the Applicant. If an agency does not file comments within the time specified for filing comments, it will be presumed to have no comments. One copy of an agency's comments must also be sent to the Applicant's representatives.

Magalie R. Salas,

Secretary.

[FR Doc. 03–1262 Filed 1–17–03; 8:45 am]

BILLING CODE 6717–01–P

DEPARTMENT OF ENERGY

Federal Energy Regulatory Commission

[Project No. 2232–449 & 450]

Notice of Applications for Non-Project Use of Project Lands and Soliciting Comments, Motions to Intervene, and Protests

January 14, 2003.

Take notice that the two following applications have been filed with the Commission and are available for public inspection:

a. *Application Type:* Non-Project Use of Project Lands.

b. *Project No:* 2232–449 & 2232–450.

c. *Date Filed:* November 25, 2002.

d. *Applicant:* Duke Power Company.

e. *Name of Project:* Catawba-Wateree.

f. *Location:* The project is located in Alexander, Burke, Caldwell, Catawba, Gaston, Iredell, Lincoln, McDowell and Mecklenburg Counties, North Carolina and Chester, Fairfield, Kershaw, Lancaster, and York Counties, South Carolina. This project does not occupy any federal lands.

g. Filed Pursuant to: Federal Power Act, 16 U.S.C. §§ 791(a) 825(r) and §§ 799 and 801.

h. *Applicant Contact:* Mr. Joe Hall, Lake Management Representative, Duke Power, a division of Duke Energy Corp., P.O. Box 1006, Charlotte, North Carolina 28201–1006, (704) 382–8576.

i. FERC Contacts: Any questions on this notice regarding Sunset Bay, P–2232–449, should be addressed to: Mrs. Jean Potvin at (202) 502–8928, or e-mail address: jean.potvin@ferc.gov. Any questions on this notice regarding The Highlands, P–2232–450, should be addressed to Ms. Shana High at (202) 502–8674, or e-mail address: shana.high@ferc.gov.

j. Deadline for filing comments and or motions: February 14, 2003.

All documents (original and eight copies) should be filed with: Ms. Magalie R. Salas, Secretary, Federal Energy Regulatory Commission, 888 First Street, NE., Washington DC 20426. Please include the project number (P–2232–449 or 450) on any comments or motions filed. Comments, protests, and interventions may be filed electronically via the internet in lieu of paper. *See* 18 CFR 385.2001(a)(1)(iii) and the instructions on the Commission's Web site under the ''e-Filing'' link. The Commission strongly encourages e-filings.

k. *Description of Requests:*

In the first application, P–2232–449, the licensee proposes to grant a lease for a Commercial Residential Marina to Sunset Bay at Lake Norman, LLC, Inc. for the Sunset Bay Subdivision. The proposal includes one parcel of project land containing a total of 0.535 acre for a proposed commercial residential marina facility. The leased area will provide 14 boat slips for access to the reservoir for residents of the Sunset Bay Subdivision, located in Iredell County, North Carolina.

In the second application, P–2232–450, the licensee proposes to grant a lease for a Commercial Residential Marina to the Highlands at Lake Norman, LLC, Inc. for the Highlands Subdivision. The proposal includes one parcel of project land containing a total of 0.503 acre for a proposed commercial residential marina facility. The leased area will provide 20 boat slips for access to the reservoir for residents of the Highlands Subdivision, located in Iredell County, North Carolina.

l. Location of the Applications: The filings are available for review at the Commission in the Public Reference Room, located at 888 First Street, NE., Room 2A, Washington, DC 20426, or may be viewed on the Commission's Web site at *http://www.ferc.gov* using the ''FERRIS'' link. Enter the docket number excluding the last three digits in the docket number field to access the document. For assistance, please call the Helpline at (866) 208–3676 or contact *FERCONLINESUPPORT@ferc.gov*. For TTY, contact (202) 502–8659.

m. Individuals desiring to be included on the Commission's mailing list should so indicate by writing to the Secretary of the Commission.

n. Comments, Protests, or Motions to Intervene—Anyone may submit comments, a protest, or a motion to intervene in accordance with the requirements of Rules of Practice and Procedure, 18 CFR 385.210, .211, .214. In determining the appropriate action to take, the Commission will consider all protests or other comments filed, but only those who file a motion to intervene in accordance with the Commission's Rules may become a party to the proceeding. Any comments, protests, or motions to intervene must be received on or before the specified comment date for the particular application.

o. Filing and Service of Responsive Documents—Any filings must bear in all capital letters the title ''COMMENTS'', ''RECOMMENDATIONS FOR TERMS AND CONDITIONS'', ''PROTEST'', OR ''MOTION TO INTERVENE'', as applicable, and the Project Number of the particular application to which the filing refers. A copy of any motion to intervene must also be served upon each representative of the Applicant specified in the particular application.

p. Agency Comments—Federal, state, and local agencies are invited to file comments on the described applications. A copy of the applications may be obtained by agencies directly from the Applicant. If an agency does not file comments within the time specified for filing comments, it will be presumed to have no comments. One copy of an agency's comments must also be sent to the Applicant's representatives.

q. Comments, protests and interventions may be filed electronically via the Internet in lieu of paper. *See* 18 CFR 385.2001(a)(1)(iii) and the instructions on the Commission's Web site at *http://www.ferc.gov* under the ''e-Filing'' link.

Magalie R. Salas,

Secretary.

[FR Doc. 03–1263 Filed 1–17–03; 8:45 am]

BILLING CODE 6717–01–P

DEPARTMENT OF ENERGY

Federal Energy Regulatory Commission

Notice of Transfer of License and Soliciting Comments, Motions To Intervene, and Protests

January 14, 2003.

Take notice that the following hydroelectric application has been filed with the Commission and is available for public inspection:

a. *Application Type:* Transfer of License.

b. *Project No.:* P–3267–013.

c. *Date Filed:* August 5, 2002.

d. *Applicants:* Bellows-Tower Hydro, Inc. (Transferor) and North Country Community College Foundation, Inc. (Transferee).

e. *Name of Project:* Ballard Mill.

f. *Location:* On the Salmon River in Franklin County, New York. The project does not utilize federal or tribal lands.

g. *Filed Pursuant to:* Federal Power Act, 16 U.S.C. 791(a)–825(r).

h. *Applicants Contact:* Frank Christie, Bellows-Tower Hydro, Inc., 359 River Street, Suite 202, Manistee, MI 49660, (231) 398–0625 (Transferor); Ted Morgan, North Country Community College Foundation, Inc., 20 Winona Ave., P.O. Box 89, Saranac Lake, NY 12983.

i. *FERC Contact:* Regina Saizan, (202) 502–8765.

j. Deadline for filing comments and or motions: February 14, 2003.

All documents (original and eight copies) should be filed with: Magalie R. Salas, Secretary, Federal Energy Regulatory Commission, 888 First Street, NE., Washington, DC 20426. Comments, protests, and interventions may be filed electronically via the Internet in lieu of paper; *see* 18 CFR 385.2001(a)(1)(iii) and the instructions on the Commission's Web site under the ''e-Filing'' link. The Commission strongly encourages electronic filings. Please include the project number (P–3267–013) on any comments or motions filed.

The Commission's rules of practice and procedure require all interveners filing a document with the Commission to serve a copy of that document on each person in the official service list for the project. Further, if an intervener files comments or documents with the Commission relating to the merits of an issue that may affect the responsibilities of a particular resource agency, they must also serve a copy of the document on that resource agency.

k. Description of Transfer: The applicants seek Commission approval to transfer the license for the Ballard Mill Project from Bellows-Tower Hydro, Inc. to the North Country Community College Foundation, Inc.

l. This filing is available for review at the Commission in the Public Reference Room or may be viewed on the Commission's Web site at *http://www.ferc.gov* using the ''FERRIS'' link. Enter the docket number excluding the last three digits in the docket number field to access the document. For assistance, call toll-free 1–866–208–3676 or e-mail ferconlinesupport@ferc.gov. For TTY, call (202) 502–8659. A copy is also available for inspection and reproduction at the addresses in item h.

m. Individuals desiring to be included on the Commission's mailing list should so indicate by writing to the Secretary of the Commission.

n. Comments, Protests, or Motions to Intervene—Anyone may submit comments, a protest, or a motion to intervene in accordance with the requirements of Rules of Practice and Procedure, 18 CFR 385.210, .211, .214. In determining the appropriate action to take, the Commission will consider all protests or other comments filed, but only those who file a motion to intervene in accordance with the Commission's Rules may become a party to the proceeding. Any comments, protests, or motions to intervene must be received on or before the specified comment date for the particular application.

o. Filing and Service of Responsive Documents—Any filings must bear in all capital letters the title ''COMMENTS'', ''RECOMMENDATIONS FOR TERMS AND CONDITIONS'', ''PROTEST'', or ''MOTION TO INTERVENE'', as applicable, and the Project Number of the particular application to which the filing refers. A copy of any motion to intervene must also be served upon each representative of the Applicant specified in the particular application.

p. Agency Comments—Federal, state, and local agencies are invited to file comments on the described application. A copy of the application may be obtained by agencies directly from the Applicant. If an agency does not file comments within the time specified for filing comments, it will be presumed to have no comments. One copy of an agency's comments must also be sent to the Applicant's representatives.

Magalie R. Salas,

Secretary.

[FR Doc. 03–1264 Filed 1–17–03; 8:45 am]

BILLING CODE 6717–01–P

ENVIRONMENTAL PROTECTION AGENCY

[Regional Docket Nos. II–2000–08, –09, II–2001–01, –03, –04; FRL–7439–6]

Clean Air Act Operating Permit Program; Petitions for Objection to State Operating Permits for Columbia University; Starrett City Power Plant; Elmhurst Hospital; Maimonides Medical Center; and the Bergen Point Sewage Treatment Plant

AGENCY: Environmental Protection Agency (EPA).

ACTION: Notice of final orders on petitions to object to five State operating permits.

SUMMARY: This document announces that the EPA Administrator has responded to five citizen petitions asking EPA to object to operating permits issued to five facilities by the New York State Department of Environmental Conservation (NYSDEC). Specifically, the Administrator has partially granted and partially denied each of the petitions submitted by the New York Public Interest Research Group (NYPIRG) to object to each of the State operating permits issued to the following facilities: Columbia University in New York, NY; Starrett City Power Plant in Brooklyn, NY; Elmhurst Hospital in Elmhurst, NY; Maimonides Medical Center in Brooklyn, NY; and Bergen Point Sewage Treatment Plant in West Babylon, NY.

Pursuant to section 505(b)(2) of the Clean Air Act (Act), Petitioner may seek judicial review of those portions of the petitions which EPA denied in the United States Court of Appeals for the appropriate circuit. Any petition for review shall be filed within 60 days from the date this notice appears in the **Federal Register**, pursuant to section 307 of the Act.

ADDRESSES: You may review copies of the final orders, the petitions, and other supporting information at the EPA, Region 2, 290 Broadway, New York, New York 10007–1866. If you wish to examine these documents, you should make an appointment at least 24 hours before visiting day. Additionally, the final orders for Columbia University, Starrett City and Elmhurst Hospital are available electronically at: *http://www.epa.gov/region07/programs/artd/air/title5/petitiondb/petitiondb2000.htm,* and the final orders for Maimonides Medical Center and Bergen Point Sewage Treatment Plant are available electronically at: *http://www.epa.gov/region07/programs/artd/air/title5/petitiondb/petitiondb2001.htm.*

FOR FURTHER INFORMATION CONTACT: Steven Riva, Chief, Permitting Section, Air Programs Branch, Division of Environmental Planning and Protection, EPA, Region 2, 290 Broadway, 25th Floor, New York, New York 10007–1866, telephone (212) 637–4074.

SUPPLEMENTARY INFORMATION: The Act affords EPA a 45-day period to review, and object to as appropriate, operating permits proposed by State permitting authorities. Section 505(b)(2) of the Act authorizes any person to petition the EPA Administrator within 60 days after the expiration of this review period to object to State operating permits if EPA has not done so. Petitions must be based only on objections to the permit that were raised with reasonable specificity during the public comment period provided by the State, unless the petitioner demonstrates that it was impracticable to raise these issues during the comment period or the grounds for the issues arose after this period.

I. Columbia University

On October 2, 2000, the EPA received a petition from NYPIRG, requesting that EPA object to the issuance of the title V operating permit to Columbia University. The petition raises issues regarding the permit application, the permit issuance process, and the permit itself. NYPIRG asserts that (1) NYSDEC violated the public participation requirements of 40 CFR 70.7(h) by inappropriately denying NYPIRG's request for a public hearing; (2) the permit is based on an incomplete permit application in violation of 40 CFR 70.5(c); (3) the permit lacks an adequate statement of basis as required by 40 CFR 70.7(a)(5); (4) the permit distorts the annual compliance certification requirement of CAA section 114(a)(3) and 40 CFR 70.6(c)(5); (5) the permit does not assure compliance with all applicable requirements as mandated by 40 CFR 70.1(b) and 70.6(a)(1) because it illegally sanctions the systematic violation of applicable requirements during startup/shutdown, malfunction, maintenance, and upset conditions; (6) the permit does not require prompt reporting of all deviations from permit requirements as mandated by 40 CFR 70.6(a)(3)(iii)(B); and (7) the permit does not assure compliance with all applicable requirements as mandated by 40 CFR 70.1(b) and 70.6(a)(1) because many individual permit conditions lack adequate monitoring and are not practically enforceable.

On December 16, 2002, the Administrator issued an order partially granting and partially denying the petition on Columbia University. The order explains the reasons behind EPA's conclusion that the NYSDEC must reopen the permit to: (1) Enforceably prohibit operation of all four boilers simultaneously, (2) specify that continuous opacity monitors are used, (3) incorporate monitoring for fuel sulfur content, (4) incorporate sulfur requirements of the New Source Performance Standards, (5) include monitoring to support the annual and hourly NO_X limits, and (6) incorporate operational restrictions to limit the annual SO_2 emissions and include monitoring to support the hourly SO_2 limits. The order also explains the reasons for denying NYPIRG's remaining claims.

NYPIRG raises each of the above seven issues in the petitions on Starrett City Power Plant and Elmhurst Hospital, as well. NYPIRG raises each of the above issues except the public hearing issue in the petitions on Maimonides Medical Center and Bergen Point Sewage Treatment Plant. Further, in the Starrett City and Maimonides petitions, NYPIRG raises an additional issue: the permit fails to include the applicable particulate matter limitation that is part of New York's State Implementation Plan. Finally, in the petition on Bergen Point, NYPIRG raises a new issue: the permit lacks federally enforceable conditions that govern the procedures for permit renewal. In each of these petitions, the issue on monitoring is subdivided into several detailed points, some of which are permit-specific and some of which are shared among the other permits.

II. Starrett City Power Plant

On January 3, 2001, the EPA received a petition from NYPIRG, requesting that EPA object to the issuance of the title V operating permit to Starrett City, on the grounds listed above. On December 16, 2002, the Administrator issued an order partially granting and partially denying the petition. The order explains the reasons behind EPA's conclusion that the NYSDEC must reopen the permit to: (1) Revise the permit's sulfur-in-fuel provisions to incorporate the applicable SIP citation; (2) add the requirement for annual tune-ups for the facility's four boilers; (3) add operational restrictions for the facility's three reciprocating engines; (4) add recordkeeping and operational limits based on the most recent stack test for the facility's three reciprocating engines; (5) add the requirement for annual tune-ups for the facility's three reciprocating engines; and (6) add the applicable SIP particulate matter limit and appropriate monitoring for the facility's four boilers and three reciprocating engines. The order also explains the reasons for denying NYPIRG's remaining claims.

III. Elmhurst Hospital

On October 10, 2000, the EPA received a petition from NYPIRG, requesting that EPA object to the issuance of the title V operating permit to Elmhurst Hospital on the grounds listed above. On December 16, 2002, the Administrator issued an order partially granting and partially denying the petition. The order explains the reasons behind EPA's conclusion that the NYSDEC must reopen the permit to add requirements for prompt reporting of temperature excursions at the ethylene oxide abatement system. The order also explains the reasons for denying NYPIRG's remaining claims.

IV. Maimonides Medical Center

On October 29, 2001, the EPA received a petition from NYPIRG, requesting that EPA object to the issuance of the title V operating permit to the Maimonides Medical Center on the grounds listed above. On December 16, 2002, the Administrator issued an order partially granting and partially denying the petition. The order explains the reasons behind EPA's conclusion that the NYSDEC must reopen the permit to: (1) Add the requirements for annual tune-ups for the facility's five boilers; (2) add the applicable SIP particulate matter limit and appropriate monitoring and recordkeeping; (3) move compliance requirements relating to the ethylene oxide control device from the State side to the federally enforceable side of the permit; (4) revise monitoring compliance requirements to express permissible emission rates in terms of those same units that are expressed in the SIP; (5) specify which of two proposed emission control scenarios, stated in the permit, is being retained for implementation regarding the ethylene oxide operation; (6) upgrade the existing monitoring relating to the ethylene oxide operation; and (7) add opacity monitoring requirements to the ethylene oxide operation. The order also explains the reasons for denying NYPIRG's remaining claims.

V. Bergen Point Sewage Treatment Plant

On October 15, 2001, the EPA received a petition from NYPIRG, requesting that EPA object to the issuance of the title V operating permit to Bergen Point on the grounds listed above. On December 16, 2002, the Administrator issued an order partially granting and partially denying the petition. The order explains the reasons

behind EPA's conclusion that the NYSDEC must reopen the permit to: (1) Upgrade existing monitoring relating to stack testing and stack emissions; (2) include both particulate matter emission limits (State and Federal) as applicable requirements of the incinerators; (3) require permittee to keep a log of the incinerators' operating hours; (4) incorporate calibration methods and frequencies for monitoring devices; (5) specify a test method and appropriate recordkeeping for the sludge sampling activity; (6) incorporate the average scrubber pressure drop from the most recent performance test; and (7) specify QA/QC requirements with respect to the continuous opacity monitors. The order also explains the reasons for denying NYPIRG's remaining claims.

Dated: January 7, 2003.

Jane M. Kenny,

Regional Administrator, Region 2.

[FR Doc. 03–964 Filed 1–17–03; 8:45 am]

BILLING CODE 6560–50–P

ENVIRONMENTAL PROTECTION AGENCY

[FRL–7440–8]

EPA Science Advisory Board, Notification of Public Advisory, Committee Teleconference Meeting; Human Health Strategy Review Panel

Pursuant to the Federal Advisory Committee Act, Public Law 92–463, Notice is hereby given that the Human Health Strategy Review Panel (HHRS Review Panel) of the U.S. Environmental Protection Agency's (EPA) Science Advisory Board (SAB) will meet via teleconference on February 7, 2003 from 1 p.m. to 3 p.m. eastern time. This teleconference meeting will be hosted out of Conference Room 6013, USEPA, Ariel Rios Building North, 1200 Pennsylvania Avenue, NW., Washington, DC 20004. The meeting is open to the public, but, due to limited space, seating will be on a first-come basis. The public may also attend via telephone, however, lines may be limited. Information on how to participate is given below.

Background—The background for this review and the charge to the HHRS Review Panel was published in 67 FR 41718 on June 19, 2002. The notice also included a draft charge to the HHRS Review Panel; a call for nominations for members of the HHRS Review Panel in certain technical expertise areas needed to address the charge and described the process to be used in forming the HHRS Review Panel. Subsequently, notice was published October 11, 2002 (67 FR 63422) detailing meetings that have since been convened: a teleconference on October 23, 2002, and a face to face meeting in RTP, North Carolina on November 20–22, 2002.

Purpose of this Meeting—The purpose of this public teleconference meeting is for the HHRS Review Panel to: (a) Review and revise the panel's draft report as necessary; and (b) approve the report as revised for delivery to the SAB Executive Committee.

FOR FURTHER INFORMATION: To inquire about public participation in the meeting identified above please contact Dr. Suhair Shallal, Designated Federal Officer, HHRS Review Panel, USEPA Science Advisory Board (1400A), Suite 6450P, 1200 Pennsylvania Avenue, NW., Washington, DC 20460; telephone/voice mail at (202) 564–4566; fax at (202) 501–0582; or via e-mail at *shallal.suhair@epa.gov.* Members of the public desiring additional information about the meeting locations or the call-in number for the teleconference must contact Dr. Shallal at the addresses and numbers identified above.

Submitting Public Comments—The SAB will have a brief period (no more than 10 minutes) available during the Teleconference meeting for applicable public comment. For the Teleconference, the oral public comment period will be divided among the speakers who register. Registration is on a first come basis. Speakers who have been granted time on the agenda may not yield their time to other speakers. Those wishing to speak but who are unable to register in time may provide their comments in writing. Requests for oral comments must be in writing (e-mail, fax or mail) and received by Dr. Shallal at the address above no later than noon eastern time on January 31, 2003.

Availability of Review Material—There is one primary EPA document that is the subject of this review. This review document (Human Health Research Strategy, USEPA ORD, May 2002) is available electronically at the following site *http://www.epa.gov/sab/pdf/hhrs.pdf*

Providing Oral or Written Comments at SAB Meetings

It is the policy of the EPA Science Advisory Board to accept written public comments of any length, and to accommodate oral public comments whenever possible. The EPA Science Advisory Board expects that public statements presented at its meetings will not be repetitive of previously submitted oral or written statements. *Oral Comments:* In general, each individual or group requesting an oral presentation at a face-to-face meeting will be limited to a total time of 10 minutes (unless otherwise indicated above). For teleconference meetings, opportunities for oral comment will usually be limited to no more than three minutes per speaker and no more than 15 minutes total (unless otherwise indicated above). Deadlines for getting on the public speaker list for a meeting are given above. Speakers should bring at least 35 copies of their comments and presentation slides for distribution to the reviewers and public at the meeting. *Written Comments:* Although the SAB accepts written comments until the date of the meeting (unless otherwise stated), written comments should be received in the SAB Staff Office at least one week prior to the meeting date so that the comments may be made available to the review panel for their consideration. Comments should be supplied to the appropriate DFO at the address/contact information noted above in the following formats: One hard copy with original signature, and one electronic copy via e-mail (acceptable file format: Adobe Acrobat, WordPerfect, Word, or Rich Text files (in IBM–PC/Windows 95/98 format). Those providing written comments and who attend the meeting are also asked to bring 20 copies of their comments for public distribution.

Meeting Access—Individuals requiring special accommodation at this meeting, including wheelchair access to the conference room, should contact Dr. Shallal at least five business days prior to the meeting so that appropriate arrangements can be made.

General Information—Additional information concerning the EPA Science Advisory Board, its structure, function, and composition, may be found on the SAB Web site (*http://www.epa.gov/sab*) and in the Science Advisory Board FY2001 Annual Staff Report, which is available from the SAB Publications Staff at (202) 564–4533 or via fax at (202) 501–0256.

Dated: January 9, 2003.

A. Robert Flaak,

Acting Staff Office Director, EPA Science Advisory Board Staff Office.

[FR Doc. 03–1240 Filed 1–17–03; 8:45 am]

BILLING CODE 6560–50–P

ENVIRONMENTAL PROTECTION AGENCY

[FRL–7440–6]

Jack Goins Waste Oil Superfund Site; Notice of proposed De minimis settlement

AGENCY: Environmental Protection Agency.

ACTION: Notice of proposed de minimis Settlement.

SUMMARY: Under Section 122(g)(4) of the Comprehensive Environmental Response, Compensation and Liability Act (CERCLA), the Environmental Protection Agency (EPA) has offered a de minimis settlement at the Jack Goins Waste Oil Superfund Site (Site) under an Administrative Order on Consent (AOC) to settle claims for past and future response costs at the Site. Approximately 593 parties have returned signature pages accepting EPA's settlement offer. For thirty (30) days following the publication of this notice, EPA will receive written comments relating to the settlement. EPA may withdraw from or modify the proposed settlement should such comments disclose facts or considerations which indicate the proposed settlement is inappropriate, improper, or inadequate. Copies of the proposed settlement are available from: Ms. Paula V. Batchelor, U.S. Environmental Protection Agency, Region IV, CERCLA Program Services Branch, Waste Management Division, 61 Forsyth Street, SW., Atlanta, Georgia 30303, (404) 562–8887.

Written comments may be submitted to Mr. Greg Armstrong at the above address within 30 days of the date of publication.

Dated: January 3, 2003.

James Miller,

Acting Chief, CERCLA Program Services Branch, Waste Management Division.

[FR Doc. 03–1241 Filed 1–17–03; 8:45 am]

BILLING CODE 6560–50–P

ENVIRONMENTAL PROTECTION AGENCY

[FRL–7440–7]

Jack Goins Waste Oil Superfund Site/ Cleveland, TN; Notice of proposed settlement

AGENCY: Environmental Protection Agency.

ACTION: Notice of proposed settlement.

SUMMARY: Under Section 122(h)(1) of the Comprehensive Environmental Response, Compensation, and Liability Act (CERCLA), the Environmental Protection Agency (EPA) has proposed to settle claims for response costs at the Jack Goins Waste Oil Superfund Site (Site) located in Cleveland, Tennessee, with Alstom Power, BFI (Chattanooga), Bowater Newsprint Operations, Emerson Electric, Johnston Coca-Cola Bottling Company, Maytag Cleveland Cooking Products, Smith & Green Construction Co., Inc., and Texaco, Inc. EPA will consider public comments on the proposed settlement for thirty days. EPA may withdraw from or modify the proposed settlement should such comments disclose facts or considerations which indicate the proposed settlement is inappropriate, improper, or inadequate. Copies of the proposed settlement are available from: Ms. Paula V. Batchelor, U.S. Environmental Protection Agency, Region IV, CERCLA Program Services Branch, Waste Management Division, 61 Forsyth Street, SW., Atlanta, Georgia 30303, (404) 562–8887.

Written comment may be submitted to Mr. Greg Armstrong at the above address within 30 days of the date of publication.

Dated: January 3, 2003.

James Miller,

Acting Chief, CERCLA Program Services Branch, Waste Management Division.

[FR Doc. 03–1242 Filed 1–17–03; 8:45 am]

BILLING CODE 6560–50–P

FEDERAL COMMUNICATIONS COMMISSION

Notice of Public Information Collection(s) Being Reviewed by the Federal Communications Commission, Comments Requested

January 13, 2003.

SUMMARY: The Federal Communications Commission, as part of its continuing effort to reduce paperwork burden invites the general public and other Federal agencies to take this opportunity to comment on the following information collection(s), as required by the Paperwork Reduction Act of 1995, Public Law 104–13. An agency may not conduct or sponsor a collection of information unless it displays a currently valid control number. No person shall be subject to any penalty for failing to comply with a collection of information subject to the Paperwork Reduction Act (PRA) that does not display a valid control number. Comments are requested concerning (a) whether the proposed collection of information is necessary for the proper performance of the functions of the Commission, including whether the information shall have practical utility; (b) the accuracy of the Commission's burden estimate; (c) ways to enhance the quality, utility, and clarity of the information collected; and (d) ways to minimize the burden of the collection of information on the respondents, including the use of automated collection techniques or other forms of information technology.

DATES: Written comments should be submitted on or before March 24, 2003. If you anticipate that you will be submitting comments, but find it difficult to do so within the period of time allowed by this notice, you should advise the contact listed below as soon as possible.

ADDRESSES: Direct all comments to Judith Boley Herman, Federal Communications Commission, Room 1–C804 or Room 1–A804, 445 12th Street, SW., Washington, DC 20554 or via the Internet to *jboley@fcc.gov*.

FOR FURTHER INFORMATION CONTACT: For additional information or copies of the information collection(s), contact Judith Boley Herman at 202–418–0214 or via the Internet at *jboley@fcc.gov*.

SUPPLEMENTARY INFORMATION:

OMB Control No.: 3060–0066.

Title: Application for Renewal of Instructional Television Fixed Station and/or Response Station(s) and Low Power Relay Station(s) License.

Form No.: FCC Form 330–R.

Type of Review: Revision of a currently approved collection.

Respondents: Not-for-profit institutions, and state, local or tribal government.

Number of Respondents: 75.

Estimated Time Per Response: 3 hours.

Frequency of Response: Reporting requirement every 10 years (upon expiration).

Total Annual Burden: 225 hours.

Total Annual Cost: N/A.

Needs and Uses: FCC Form 330–R is used by licensees of Instructional Television Fixed (ITFS), Response, and Low Power Relay Stations to file for renewal of their licenses. The data are used by FCC staff to ensure that ITFS licensees continue to meet basic Commission policies and rules, as well as statutory requirements to remain a licensee. The form is being revised to include the FCC Registration Number (FRN) and to clarify existing instructions for the general public.

OMB Control No.: 3060–0093.

Title: Applications for Renewal of Radio Station License in Specified Services.

Form No.: FCC Form 405.
Type of Review: Revision of a currently approved collection.
Respondents: Business or other for-profit.
Number of Respondents: 2,500.
Estimated Time Per Response: 2.25 hours.
Frequency of Response: On occasion reporting requirement.
Total Annual Burden: 5,625 hours.
Total Annual Cost: $338,000.
Needs and Uses: The FCC Form 405 is used by common carriers and Multipoint Distribution Service (MDS) non-common carriers to apply for renewal of radio station licenses. Section 307(c) of the Communications Act limits the term of common carrier radio licenses to ten years and requires that written applications be submitted for renewal. It is proposed that the FCC Form 405 be revised to add the FCC Registration Number (FRN) in order to have a unique identifier for each applicant and to facilitate the applicants' electronic payments of licensing fees.

OMB Control No.: 3060–0589.
Title: FCC Remittance Advice and Continuation Sheet.
Form No.: FCC Form 159 and 159–C.
Type of Review: Revision of a currently approved collection.
Respondents: Individuals or households, business or other for-profit, not-for-profit institutions, and state, local or tribal government.
Number of Respondents: 635,738.
Estimated Time Per Response: .50 hours.
Frequency of Response: On occasion reporting requirement and third party disclosure requirement.
Total Annual Burden: 317,869 hours.
Total Annual Cost: N/A.
Needs and Uses: The FCC Forms 159 and 159–C are required for payment of regulatory fees, and for use when paying for multiple filings with a single payment instrument, or when paying by credit card. The forms require specific information to track payment history, and to facilitate the efficient and expeditious processing of collections by a lockbox bank. The forms are being revised to eliminate the Taxpayer Information Number (TIN), add Discover and American Express to the credit cards allowable, and eliminate redundant data fields asking for information already available in the CORES system.

OMB Control No.: 3060–0809
Title: Communications Assistance for Law Enforcement Act (CALEA).
Form No.: N/A.
Type of Review: Revision of a currently approved collection.
Respondents: Business or other for-profit.
Number of Respondents: 5,000.
Estimated Time Per Response: 7 hours.
Frequency of Response: On occasion and one time reporting requirements and recordkeeping requirement.
Total Annual Burden: 51,000 hours.
Total Annual Cost: N/A.
Needs and Uses: The information filed with the Commission will be used to verify telecommunications carriers' conformance with the CALEA requirements, and the information made available to law enforcement officials will be used to determine the accountability and accuracy of telecommunications carriers' compliance with lawful electronic surveillance orders.

OMB Control No.: 3060–0901.
Title: Reports of Common Carriers and Affiliates.
Form No.: N/A.
Type of Review: Extension of a currently approved collection.
Respondents: Business or other for-profit, not-for-profit institutions.
Number of Respondents: 20 respondents; 1,200 responses.
Estimated Time Per Response: 5 hours.
Frequency of Response: On occasion reporting requirement.
Total Annual Burden: 6,000 hours.
Total Annual Cost: N/A.
Needs and Uses: This information will be used by FCC staff to monitor the operating agreements of U.S. carriers and their foreign correspondents that possess market power, and, in particular, to monitor the international accounting rates of such carriers to ensure consistency with Commission policies and the by-pass and safeguard its international settlements policy.

Federal Communications Commission.

Marlene H. Dortch,

Secretary.

[FR Doc. 03–1203 Filed 1–17–03; 8:45 am]

BILLING CODE 6712–01–P

FEDERAL COMMUNICATIONS COMMISSION

Notice of Public Information Collection(s) Being Reviewed by the Federal Communications Commission for Extension Under Delegated Authority, Comments Requested

January 13, 2003.

SUMMARY: The Federal Communications Commission, as part of its continuing effort to reduce paperwork burden invites the general public and other Federal agencies to take this opportunity to comment on the following information collection(s), as required by the Paperwork Reduction Act of 1995, Pub. L. 104–13. An agency may not conduct or sponsor a collection of information unless it displays a currently valid control number. No person shall be subject to any penalty for failing to comply with a collection of information subject to the Paperwork Reduction Act (PRA) that does not display a valid control number. Comments are requested concerning (a) Whether the proposed collection of information is necessary for the proper performance of the functions of the Commission, including whether the information shall have practical utility; (b) the accuracy of the Commission's burden estimate; (c) ways to enhance the quality, utility, and clarity of the information collected; and (d) ways to minimize the burden of the collection of information on the respondents, including the use of automated collection techniques or other forms of information technology.

DATES: Persons wishing to comment on this information collection should submit comments March 24, 2003. If you anticipate that you will be submitting comments, but find it difficult to do so within the period of time allowed by this notice, you should advise the contact listed below as soon as possible.

ADDRESSES: Direct all comments to Judy Boley Herman, Federal Communications Commission, 445 12th Street, SW., Room 1–C804, Washington, DC 20554 or via the Internet to *jboley@fcc.gov.*

FOR FURTHER INFORMATION CONTACT: For additional information or copies of the information collections contact Judy Boley Herman at (202) 418–0214 or via the internet at *jboley@fcc.gov.*

SUPPLEMENTARY INFORMATION:

OMB Control No.: 3060–0454.
Title: Regulation of International Accounting Rates.
Form No.: N/A.
Type of Review: Extension of a currently approved collection.
Respondents: Business or other for profit.
Number of Respondents: 20 respondents; 760 responses.
Estimated Time Per Response: 1 hour.
Frequency of Response: On occasion reporting requirement, third party disclosure requirement.
Total Annual Burden: 760 hours.
Annual Reporting and Recordkeeping Cost Burden: $6,000.
Needs and Uses: The information will be used by the FCC staff to monitor the international accounting rates of such

carriers to ensure consistency with Commission policies and the public interest. The information also enables the Commission to preclude one-way bypass and to safeguard its international settlements policy. Carriers also use the information to monitor accounting and settlement rates for international telecommunications.

OMB Control No.: 3060–0751.

Title: Reports Concerning International Private Lines Interconnected to the U.S. Public Switched Network.

Form No.: N/A.

Type of Review: Extension of a currently approved collection.

Respondents: Business or other for-profit entities.

Number of Respondents: 10.

Estimated Time Per Response: 8 hours.

Frequency of Response: Annual reporting requirement.

Total Annual Burden: 80 hours.

Annual Reporting and Recordkeeping Cost Burden: N/A.

Needs and Uses: The filings will be used by the Commission in reviewing the impact, if any, that end-user private line interconnections have on U.S. international settlements policy. The data will also enhance the ability of both the Commission and interested parties to monitor for unauthorized resale of international private lines that are interconnected to the U.S. public switched network.

OMB Control No.: 3060–0768.

Title: 28 GHz Band Segmentation Plan Amending the Commission's Rules to Redesignate the 27.5–29.5 GHz Frequency Band, to Reallocate the 29.5–30.0 GHz Frequency Band, and to Establish Rules and Policies for Local Multipoint Distribution Services and for the Fixed Satellite Service.

Form No.: N/A.

Type of Review: Extension of a currently approved collection.

Respondents: Business or other for profit.

Number of Respondents: 15 respondents; 60 responses.

Estimated Time Per Response: 1.5 hours.

Frequency of Response: On occasion reporting requirement, third party disclosure requirement.

Total Annual Burden: 90 hours.

Annual Reporting and Recordkeeping Cost Burden: $18,000.

Needs and Uses: The various collections of information referenced in this OMB control number are contained in 47 CFR Parts 25 and 101 of the Commission's rules. The Commission uses the information in carrying out its duties as set forth in Sections 308 and 309 of the Communications Act of 1934, as amended. Specifically, the Commission and other applicants and/or licensees in the 28 GHz band use the information to determine the technical coordination of systems that are designed to share the same band segment in the 28 GHz frequency band.

OMB Control No.: 3060–0769.

Title: Aeronautical Services Transition Plan.

Form No.: N/A.

Type of Review: Extension of a currently approved collection.

Respondents: Business or other for profit.

Number of Respondents: 6.

Estimated Time Per Response: 2 hours.

Frequency of Response: On occasion reporting requirement, third party disclosure requirement.

Total Annual Burden: 24 hours.

Annual Reporting and Recordkeeping Cost Burden: $5,000.

Needs and Uses: Providers of interim domestic aeronautical mobile satellite services via Inmarsat are required to submit a transition plan outlining the transition from Inmarsat to the U.S. domestic licensee of these services. The transition plan is used to ensure continuity of service to domestic customers during the transition plan.

OMB Control No.: 3060–0916.

Title: 406 MHz Personal Locator Beacons (PLB).

Form No.: N/A.

Type of Review: Extension of a currently approved collection.

Respondents: Individuals or households, state, local or tribal government.

Number of Respondents: 1,050.

Estimated Time Per Response: .5 hours.

Frequency of Response: On occasion reporting requirement, third party disclosure requirement.

Total Annual Burden: 525 hours.

Annual Reporting and Recordkeeping Cost Burden: N/A.

Needs and Uses: The information collection is necessary to register data with the National Oceanic and Atmospheric Administration (NOAA) and will be used by search and rescue personnel to identify the person(s) in distress and to select the proper rescue units and search methods.

Federal Communications Commission.

Marlene H. Dortch,

Secretary.

[FR Doc. 03–1204 Filed 1–17–03; 8:45 am]

BILLING CODE 6712–01–P

FEDERAL COMMUNICATIONS COMMISSION

Notice of Public Information Collection(s) Being Reviewed by the Federal Communications Commission

January 9, 2003.

SUMMARY: The Federal Communications Commission, as part of its continuing effort to reduce paperwork burden invites the general public and other Federal agencies to take this opportunity to comment on the following information collection(s), as required by the Paperwork Reduction Act of 1995, Public Law 104–13. An agency may not conduct or sponsor a collection of information unless it displays a currently valid control number. No person shall be subject to any penalty for failing to comply with a collection of information subject to the Paperwork Reduction Act (PRA) that does not display a valid control number. Comments are requested concerning (a) whether the proposed collection of information is necessary for the proper performance of the functions of the Commission, including whether the information shall have practical utility; (b) the accuracy of the Commission's burden estimate; (c) ways to enhance the quality, utility, and clarity of the information collected; and (d) ways to minimize the burden of the collection of information on the respondents, including the use of automated collection techniques or other forms of information technology.

DATES: Written comments should be submitted on or before February 20, 2003. If you anticipate that you will be submitting comments, but find it difficult to do so within the period of time allowed by this notice, you should advise the contact listed below as soon as possible.

ADDRESSES: Direct all comments to Judith Boley Herman, Federal Communications Commission, Room 1–C804, 445 12th Street, SW, DC 20554 or via the Internet to *jboley@fcc.gov*.

FOR FURTHER INFORMATION CONTACT: For additional information or copies of the information collection(s), contact Judith Boley Herman at 202–418–0214 or via the Internet at *jboley@fcc.gov*.

SUPPLEMENTARY INFORMATION:

OMB Control No.: 3060–0806.

Title: Universal Service—Schools and Libraries Universal Service Program.

Form Nos: FCC Forms 470 and 471.

Type of Review: Revision of a currently approved collection.

Respondents: Business or other for-profit, not-for-profit institutions, state, local and tribal government.

Number of Respondents: 60,000.

Estimated Time Per Response: 4.5 hours.

Frequency of Response: On occasion reporting requirements, third party disclosure requirement and recordkeeping requirement.

Total Annual Burden: 440,000 hours.

Total Annual Cost: N/A.

Needs and Uses: The Commission adopted rules providing support for all telecommunications services, Internet access, and internal connections for all eligible schools and libraries. To participate in the program, schools and libraries must submit a description of the services desired to the Administrator via FCC Form 470. The FCC Form 471 is submitted by schools and libraries that have ordered telecommunications services, Internet access and internal connections. The date is used to determine eligibility. The Commission revised the FCC Form 471 and instructions to make it possible to read with electronic readers, to update references to current deadlines and relevant statutes, and to clarify explanations to make the form generally easier to understand. The information collection requirements remain unchanged.

Federal Communications Commission.

Marlene H. Dortch,

Secretary.

[FR Doc. 03–1205 Filed 1–17–03; 8:45 am]

BILLING CODE 6712–01–P

FEDERAL COMMUNICATIONS COMMISSION

[CC Docket Nos. 96–45, 97–21; FCC 02–315]

Application for Review by Henrico County School District, Richmond, Virginia; Federal-State Joint Board on Universal Service; Changes to the Board of Directors of the National Exchange Carrier Association, Inc.

AGENCY: Federal Communications Commission.

ACTION: Notice.

SUMMARY: In this document, the Commission denies the application for review seeking review of an Order issued by the Common Carrier Bureau (Bureau) on delegated authority and affirm the decision of the Bureau. In the Order, the Bureau upheld the decision of the Schools and Libraries Division of the Universal Service Administrative Company, which denied Henrico County School District's Funding Year 1999 application for discounts under the schools and libraries universal service mechanism.

FOR FURTHER INFORMATION CONTACT: Narda Jones, Attorney, Telecommunications Access Policy Division, Wireline Competition Bureau, (202) 418–7400, TTY: (202) 418–0484.

SUPPLEMENTARY INFORMATION: This is a summary of the Commission's Order in CC Docket Nos. 96–45 and 97–21 released on November 20, 2002. The full text of this document is available for public inspection during regular business hours in the FCC Reference Center, Room CY–A257, 445 Twelfth Street, SW., Washington, DC, 20554.

1. Before the Commission is an application for review filed by Henrico County Public Schools (Henrico), Richmond, Virginia, seeking review of an Order issued by the Common Carrier Bureau (Bureau) on delegated authority. In the Order, the Bureau upheld the decision of the Schools and Libraries Division (SLD) of the Universal Service Administrative Company, which denied Henrico's Funding Year 1999 application for discounts under the schools and libraries universal service mechanism. For the reasons set forth below, we deny the application for review and affirm the decision of the Bureau.

2. Under the schools and libraries universal service support mechanism, eligible schools, libraries, and consortia that include eligible schools and libraries, may apply for discounts for eligible telecommunications services, Internet access, and internal connections. In order to receive discounts on eligible services, the Commission's rules require that the applicant submit to the Administrator a completed FCC form 470, in which the applicant sets forth its technological needs and the services for which it seeks discounts. Once the applicant has complied with the Commission's competitive bidding requirements and entered into an agreement for eligible services, it must file an FCC form 471 application to notify the Administrator of the services that have been ordered, the carrier with whom the applicant has entered into an agreement, and an estimate of funds needed to cover the discounts to be given for eligible services. Approval of the application is contingent upon the filing of FCC form 471, and funding commitment decisions are based on information provided by the school or library in this form.

3. On March 29, 2000, Henrico filed an FCC form 471 for Funding Year 1999 including 10 funding requests, each seeking discounted internal connections. It did not file an FCC form 470 in Funding Year 1999. Henrico's FCC form 471 referenced FCC form 470 App. No. 952970000283996, a Funding Year 2000 form 470 that was posted to SLD's website on December 20, 1999 (Year 2000 form 470). Henrico also relied on this Year 2000 form 470 in support of its Funding Year 2000 applications for discounts, which were filed on January 19, 2000. On July 17, 2000, SLD rejected Henrico's Funding Year 1999 application for discounts because Henrico had not specified a Funding Year 1999 FCC form 470 in connection with its Funding Year 1999 funding requests. Henrico then sought review of this SLD decision.

4. Before the Bureau, Henrico argued that reliance on a Funding Year 2000 FCC form 470 in support of a Funding Year 1999 service request was permissible because ''[n]owhere in your correspondence, procedures or instructions does it stipulate that the [Funding Year 1999] application must be based on a [Funding Year 1999] 470 form.'' The Bureau found, however, that, with one exception inapplicable to Henrico, an FCC form 470 seeking services in one year could not be used to satisfy the requirement of competitive bidding for service requests in another Funding Year.

5. In its application for review before the Commission, Henrico argues that it should be permitted to rely on the Funding Year 2000 form 470 because, at the time it electronically posted its FCC form 470 for Funding Year 1999, SLD had switched to an on-line application system for Funding Year 2000 that only permitted the posting of Funding Year 2000 FCC form 470s. Henrico asserts that it was therefore ''impossible to post a Year [1999] form 470 to the SLD website,'' and argues that its Funding Year 1999 application should therefore not be denied for its failure to do so.

6. Section 1.115(c) of the Commission's Rules provides that ''[n]o application for review will be granted if it relies on questions of fact or law upon which the designated authority has been afforded no opportunity to pass.'' We find that Henrico did not raise its present argument in the request for review to the Bureau. In that pleading, Henrico merely asserted that, under program procedures, it was not required to use a Funding Year 1999 FCC form 470 to post a Funding Year 1999 service request. Now it argues that using a Funding Year 1999 FCC form 470 was impossible at the specific time during which it sought to post a request. The former argument asserts a general right to use a Funding Year 2000 form to post Funding Year 1999 requests, while the latter argument suggests such use should be deemed permissible under the limited circumstances present at the

end of Funding Year 1999. Similarly, the factual bases for the current argument, including the limited circumstances just mentioned, and the assertion that these circumstances made posting a Funding Year 1999 request ''impossible,'' were also not presented below. Accordingly, because Henrico did not raise these factual and legal questions in its request for review before the Bureau, consideration of these arguments by the Commission is precluded by § 1.115(c).

7. Further, even if we were to consider the merits of this argument, we would still deny the application for review. First, the record demonstrates that Henrico's Funding Year 2000 FCC form 470 was clearly intended to support its Funding Year 2000 applications for funding. Henrico submitted two Funding Year 2000 FCC forms 471 applications seeking Funding Year 2000 discounts. Each application referenced FCC form 470 App. No. 952970000283996 as the supporting form 470. On September 29, 2000, SLD approved Henrico's Funding Year 2000 App. No. 188486. SLD denied Henrico's Funding Year 2000 App. No 165166 because this application sought support for internal connections and the funding cap could not accommodate applicants, such as Henrico, that were entitled to less than an 81 percent discount in Funding Year 2000.

8. Further, it would appear that Henrico's requested relief would work at cross purposes to its already secured funding for Funding Year 2000. Were we to construe the FCC form 470 App. No. 952970000283996 as a Funding Year 1999 FCC form 470, thus supporting funding of Henrico's Funding Year 1999 FCC form 471, it would also establish that Henrico's successful Funding Year 2000 application violated our competitive bidding regulations. This application sought new services in Funding Year 2000, which needed to be posted for bidding by a Funding Year 2000 FCC form 470 to comply with our competitive bidding rules.

9. Moreover, it is true that, after October 25, 1999, because SLD switched its on-line application system from one designed to process Funding Year 1999 applications to one designed for Funding Year 2000, applicants seeking to file FCC form 470 posting requests for services in Funding Year 1999 were forced to use the on-line system for Funding Year 2000 to do so. However, at the same time that USAC gave applicants official notice of the availability of additional funds on March 1, 2000, it also instructed applicants how to apply for Funding Year 1999 funds with the Funding Year 2000 form 470s. Specifically USAC directed applicants to indicate on their Year 2000 forms 470 that they were seeking services for Funding Year 1999. Forms 470 so designated were included in a list posted on the website separate from the Funding Year 2000 FCC forms 470, and SLD took special steps to ensure that providers were made aware that there were FCC form 470s seeking Funding Year 1999 services that were not included among the FCC form 470s posted in the on-line Funding Year 1999 location.

10. Thus, contrary to Henrico's assertion, it was not ''impossible'' to post a request for services in Funding Year 1999. Henrico, having already posted a Funding Year 2000 FCC form 470 on December 19, 1999, that did not specify its intention to seek Funding Year 1999 funds, had ample opportunity, after March 1, 2000, to resubmit its Year 2000 form 470 with a notation that the form was seeking Funding Year 1999 funds as USAC instructed. In fact, numerous applicants successfully posted their Funding Year 1999 requests for services using the Funding Year 2000 on-line application system. Therefore, while the absence of a Funding Year 1999 on-line system certainly justified applicants using the Funding Year 2000 system to post their Funding Year 1999 requests for bidding, it does not excuse applicants who made no attempt to post Funding Year 1999 requests at all. Here, Henrico made no such attempt to post Funding Year 1999 services. Henrico seeks to rely on an FCC form 470 that it concedes actually requested services in Funding Year 2000 and on which Henrico in fact relied on to support its subsequent successful Funding Year 2000 FCC form 471 application. Consequently, we conclude that the circumstances to which Henrico refers would not support relief in this case.

11. It is ordered, pursuant to section 5(c)(5) of the Communications Act of 1934, as amended, and § 1.115 of the Commission's rules, that the application for review filed by Henrico County Public Schools, Richmond, Virginia, on March 5, 2002 is denied.

Federal Communications Commission.

Marlene H. Dortch,

Secretary.

[FR Doc. 03–1175 Filed 1–17–03; 8:45 am]

BILLING CODE 6712–01–P

FEDERAL COMMUNICATIONS COMMISSION

[CC Docket Nos. 96–45, 97–21; FCC 02–306]

Application for Review by Lunenburg County Public Schools, Victoria, Virginia; Federal-State Joint Board on Universal Service; Changes to the Board of Directors of the National Exchange Carrier Association, Inc.

AGENCY: Federal Communications Commission.

ACTION: Notice.

SUMMARY: In this document, the Commission grants the application for review seeking review of an Order issued by the Accounting Policy Division of the Common Carrier Bureau (Bureau) on delegated authority. In the Order, the Bureau upheld the decision of the Schools and Libraries Division of the Universal Service Administrative Company, which denied Lunenburg County Public Schools' Funding Year 1999 application for discounts under the schools and libraries universal service mechanism. This document also remands to SLD to fund the request as set forth.

DATES: Effective November 20, 2002.

FOR FURTHER INFORMATION CONTACT: Narda Jones, Attorney, Telecommunications Access Policy Division, Wireline Competition Bureau, (202) 418–7400, TTY: (202) 418–0484.

SUPPLEMENTARY INFORMATION: This is a summary of the Commission's Order in CC Docket Nos. 96–45 and 97–21 released on November 20, 2002. The full text of this document is available for public inspection during regular business hours in the FCC Reference Center, Room CY–A257, 445 Twelfth Street, SW., Washington, DC 20554.

1. Before the Commission is an Application for Review filed by Lunenburg County Schools (Lunenburg), Victoria, Virginia, seeking review of an Order issued by the Accounting Policy Division of the Common Carrier Bureau (Bureau) on delegated authority. In the Order, the Bureau upheld the decision of the Schools and Libraries Division (Division) of the Universal Service Administrative Company, which denied one of Lunenburg's Funding Year 1999 application for discounts under the schools and libraries universal service mechanism. For the reasons set forth below, we grant the application for review and remand to SLD to fund the request as set forth in this Order.

2. Under the schools and libraries universal service support mechanism,

eligible schools, libraries, and consortia that include eligible schools and libraries, may apply for discounts for eligible telecommunications services, Internet access, and internal connections. The Commission's rules require that the applicant make a *bona fide* request for services by filing with the Administration an FCC form 470, which is posted to the Administrator's website for all potential competing service providers to review. After the FCC form 470 is posted, the applicant must wait at least 28 days before entering into an agreement for services and submitting an FCC form 471, which requests support for eligible services. SLD reviews the FCC forms 471 that it receives and issues funding commitment decisions in accordance with the Commission's rules.

3. Applicants may only seek support for eligible services. The instructions for the FCC form 471 clearly state: ''You may not seek support on this form for ineligible services.'' The instructions further clarify that ''[w]hile you may contract with the same service provider for both eligible and ineligible services, your contract or purchase agreement must clearly break out costs for eligible services from those for ineligible services.'' Although SLD reduces a funding request to exclude the cost of ineligible services in circumstances where the ineligible services represent less than 30 percent of the total funding request, SLD will deny a funding request in its entirety if ineligible services constitute 30 percent or more of the total. An applicant can avoid denial by subtracting out, at the time of its initial application, the cost of ineligible services.

4. At issue is Funding Request Number (FRN) 481380, which sought discounted internal connections at a pre-discount cost of $62,850.00. Documentation provided with the application indicated that this cost included $14,750 for 11 PC Cards, $29,900 for a wireless LAN, and $18,200 for installation. During its review process, SLD contacted Lunenburg for more information on the PC Cards, and based on this information, determined that they were ineligible for discounts. On April 27, 2001, SLD issued a funding commitment decision letter denying FRN 481380 on the grounds that ''30% or more of this FRN includes a request for Aironet 4800 pc cards which is an ineligible product based on program rules.'' Lunenburg then filed a request for review with the Commission.

5. In its Request for Review, Lunenburg argued that the purchase cost of the PC Cards was $14,750.00 of the total funding request amount of $62,850.00, and thus only 23.47%. However, the Bureau noted that, in addition to the purchase of equipment, the funding request also sought discounts on installation costs. The Bureau found that, in the absence of evidence in the record indicating to the contrary, the cost of the ineligible components included a proportional amount of the overall installation costs associated with the funding request. With a proportional amount of the installation costs included, the Bureau found that the cost of ineligible services was 33% of the total. Thus, the Bureau held that the funding request was properly denied in its entirety under SLD's 30% policy.

6. To support its application for review before the Commission, Lunenburg offers three arguments. First, it asserts that wireless antennas that are a small component of the PC Cards (which Lunenberg now refers to as Network Interface Cards (NI Cards)) are in fact eligible for discounts. Lunenburg asserts that when the cost for the antenna on each NI Card is subtracted from the overall NI Card cost, the total ineligible cost is less than 30% of the funding request. Second, Lunenburg asserts that there was no installation cost associated with the NI Card, because these components would be installed and configured by school staff. Third, it asserts that it has a high poverty rate and that funding is critical in order for it to bring telecommunications and Internet access to its students.

7. Lunenburg did not present any of these arguments to the Bureau in its request for review. Section 1.115(c) of the Commission's rules provides that ''[n]o application for review will be granted if it relies on questions of fact or law upon which the designated authority has been afforded no opportunity to pass.'' The note to § 1.115(c) states that ''new questions of fact or law may be presented to the designated authority in a petition for reconsideration.''

8. In other circumstances, we have held that consideration of newly raised arguments in conjunction with an application for review is precluded by § 1.115(c) of our rules. We recognize, however, that Lunenburg could not reasonably have known, when it submitted its request for review, that it needed to address the installation costs, because the Funding Commitment decision letter did not indicate that a portion of the installation costs were being found ineligible. Lunenburg was not apprised of the presumed ineligibility of a portion of the installation costs until the release of the Bureau Order. We therefore find that there is good cause to waive § 1.115(c) of our rules given these circumstances and that the facts are not in dispute. In the future, however, we urge applicants to present these types of arguments to the Bureau in a petition for reconsideration in the first instance. We caution that similar situations may not rise to the level of good cause justifying waiver of our rules.

9. In light of Lunenburg's explanation that the installation costs are entirely attributable to the wireless LAN, which is eligible for discounts under the program, we find that the ineligible portion of the request consisting of the $14,750 cost of the NI Cards is less than 30% of the $62,850 cost of the request. Because the ineligible portion is less than 30% of the request, under SLD's procedure, the eligible portion should be funded. Therefore, we grant the application for review and remand this application to SLD to fund the eligible portion of the request.

10. It is ordered, pursuant to section 5(c)(5) of the Communications Act of 1934, as amended, that the application for review filed by Lunenburg County Public Schools, Victoria, Virginia, on April 3, 2002 is granted, and this application is remanded to SLD for further action consistent with this Order.

Federal Communications Commission.

Marlene H. Dortch,

Secretary.

[FR Doc. 03–1176 Filed 1–17–03; 8:45 am]

BILLING CODE 6712–01–P

FEDERAL COMMUNICATIONS COMMISSION

Sunshine Act Meeting; Open Commission Meeting Wednesday, January 15, 2003

January 8, 2003.

The Federal Communications Commission will hold an Open Meeting on the subjects listed below on, which is scheduled to commence at in Room TW–C305, at 445 12th Street, SW., Washington, DC. The Meeting will focus on presentations by senior agency officials regarding implementations of the agency's strategic plan and a comprehensive review of FCC policies and procedures.

Presentations will be made in four panels:

Panel One consisting of the Managing Director.

Panel Two consisting of the Chiefs of the Enforcement Bureau and the Consumer and Governmental Affairs Bureau.

Panel Three consisting of the Chiefs of the Office of Engineering and Technology, the Wireless Telecommunications Bureau, and the International Bureau.

Panel Four consisting of the Chiefs of the Wireline Competition Bureau and the Media Bureau.

Additional information concerning this meeting may be obtained from David Fiske, Office of Media Relations, telephone number (202) 418–0500; TTY 1–888–835–5322. Copies of materials adopted at this meeting can be purchased from the FCC's duplicating contractor, Qualex International (202) 863–2893; Fax (202) 863–2898; TTY (202) 863–2897. These copies are available in paper format and alternative media, including large print/type; digital disk; and audio tape. Qualex International may be reached by e-mail at *Qualexint@aol.com.*

This meeting can be viewed over George Mason University's Capitol Connection. The Capitol Connection also will carry the meeting live via the Internet. For information on these services call (703) 993–3100. The audio portion of the meeting will be broadcast live on the Internet via the FCC's Internet audio broadcast page at <*http://www.fcc.gov/realaudio/*>. Audio and video tapes of this meeting can be purchased from Infocus, 341 Victory Drive, Herndon, VA 20170, telephone (703) 834–1470, Ext. 10; fax number (703) 834–0111.

Federal Communications Commission.

William F. Caton,

Deputy Secretary.

[FR Doc. 03–1408 Filed 1–16–03; 3:16 pm]

BILLING CODE 6712–01–P

FEDERAL COMMUNICATIONS COMMISSION

Privacy Act System of Records

AGENCY: Federal Communications Commission (FCC or Commission).

ACTION: Notice; altered Privacy Act system of records; revision of one routine use; addition of one new routine use; and cancellation of one system of records.

SUMMARY: Pursuant to the provisions of the Privacy Act of 1974, as amended, 5 U.S.C. 552a(e)(4) and (e)(11), the FCC proposes to alter a system of records, FCC/Central-6, ''Personnel Investigation Records.'' The altered system of records will incorporate the provisions of FCC/OMD–4, ''Security Office Control Files,'' including the addition of two routine uses from FCC/OMD–4; revision of one routine use; and addition of one new routine use incorporating the data elements and uses for the Workplace Violence Form; and make other edits and revisions as necessary. The FCC will cancel FCC/OMB–4.

DATES: In accordance with 5 U.S.C. 552a(e)(4) and (e)(11), any interested person may submit written comments concerning the proposed altered system of records on or before February 20, 2003. The Office of Management and Budget (OMB), which has oversight responsibility under the Privacy Act to review the system may submit comments on or before March 3, 2003. The proposed system shall become effective without further notice March 3, 2003 unless the FCC receives comments that would require a contrary determination. As required by 5 U.S.C. 552a(r) of the *Privacy Act of 1974,* as amended, the FCC has submitted reports on this proposed altered system to OMB and both Houses of Congress.

ADDRESSES: Comments should be sent to Les Smith, Privacy Act Clerk, Performance Evaluation and Records Management (PERM), Room 1–A804, Federal Communications Commission (FCC), 445 12th Street, SW., Washington, DC 20554, (202) 418–0217, or via the Internet at *lesmith@fcc.gov.*

FOR FURTHER INFORMATION: Contact Les Smith, Performance Evaluation and Records Management (PERM), Room 1–A804, Federal Communications Commission, 445 12th Street, SW., Washington, DC 20554, (202) 418–0217 or via the Internet at *lesmith@fcc.gov;* or Eric Botker, Security Office, Associate Managing Director—Administrative Operations (AMD–AO), Security Operations Center, Federal Communications Commission (FCC), 445 12th Street, SW., Room 1–B458, Washington, DC 20554, (202) 418–7884 or via the Internet at *ebotker@fcc.gov.*

SUPPLEMENTARY INFORMATION: As required by the *Privacy Act of 1974,* as amended, 5 U.S.C. 552a(e)(4) and (e)(11), this document sets forth notice of the proposed altered system of records maintained by the FCC; addition of two routine uses to FCC/Central-6 that were formerly in FCC/OMD–4; revision of one routine use in FCC/Central-6 to incorporate elements formerly in FCC/OMD–4; addition of one new routine use to incorporate uses in the Workplace Violence Form; and cancellation of one system of records, FCC/OMD–4. This agency previously gave complete notice of the two systems of records covered under this Notice by publication in the **Federal Register** on October 23, 2000, 65 FR 63468. This notice is a summary of more detailed information, which may be viewed at the location given in the **ADDRESSES** section above. The purposes for altering FCC/Central-6, ''Personnel Investigation Records'' are to merge FCC/OMD–4, ''Security Office Control Files'' into this system of records to eliminate possible duplications of functions and records; to add new data elements, new purposes, and one new routine use; to update the statutory authority to maintain the information that the Commission may collect when the Workplace Violence Form is introduced; and otherwise to alter, update, and revise this system of records as necessary.

The FCC proposes to achieve these purposes by altering this system of records, FCC/Central-6, ''Personnel Investigation Records'' with these changes:

The incorporation of the data elements of another system of records, FCC/OMD–4, ''Security Office Control Files,'' into FCC/Central-6;

The elimination of FCC/OMD–4;

The transfer of two routine uses formerly in FCC/OMD–4 to address new and/or revised uses:

Routine use (7) allows disclosure to the security officers of an agency in the executive, legislative, or judicial branch, or the District of Columbia Government, in response to their request(s) for verification of security clearances of FCC employees to have access to classified data or areas where their official duties require such access.

Routine use (8) allows disclosure to request information from a Federal, state, or local agency maintaining civil, criminal, or other relevant or pertinent enforcement information or records, such as licenses, if necessary to obtain information relevant to a Commission decision concerning the hiring or retention of an employee, the issuance of a security clearance, the letting of a contract, or the issuance of a grant or other benefit.

The revision of one routine use to incorporate uses formerly in FCC/OMD–4:

Routine use (5) allows disclosure to designated officers and employees of agencies, offices, and other establishments in the executive, legislative, and judicial branches of the Federal Government, and the District of Columbia Government, in response to their request, when such agency, office, or establishment conducts an investigation of the individual for the purpose of hiring, firing, or retention, granting a security clearance, making a determination of qualifications, suitability, or loyalty to the United States Government, or access to classified information or restricted areas, or classifying jobs, letting of a

contract, or issuance of a license, grant, or other benefit by the requesting agency, to the extent that the information is relevant and necessary to the requesting agency's purpose.

The addition of one new routine use to include the data elements, information, and purposes for the Workplace Violence Form:

Routine use (9) allows disclosure to the Merit System Protection Board (MSPB) during the course of the MSPB's investigation of the individual's appeal, following the Commission's adverse action against the individual.

The alteration, revision, or modification of various data elements in FCC/Central-6, including editorial changes to update, simplify, or clarify, as necessary, this system of records.

The FCC Security Officer and the Personnel Security Specialist in the Security Office will use the records in FCC/Central-6 to provide investigative information to determine compliance with Federal regulations and/or an individual's suitability and fitness for Federal employment, access to classified information or restricted areas, position sensitivity, security clearances, evaluations of qualifications, and loyalty to the U.S.; to evaluate qualifications and suitability to perform contractual services for the U.S. Government; to document such determinations; to respond to an inquiry conducted under the President's Program to Eliminate Waste and Fraud in the Government; to take action on, or respond to a complaint about a threat, harassment, intimidation, violence, or other inappropriate behavior involving one or more FCC employees and/or contract employees; and to counsel employees.

Records in this system will be available for public inspection at the location given above. The functions in this system of records will be performed by the FCC Security Officer and the Personnel Security Specialist in the Security Office.

This notice meets the requirement documenting the change in the Commission's system of records, and provides the public, Congress, and the Office of Management and Budget (OMB) an opportunity to comment.

FCC/CENTRAL–6

SYSTEM NAME:

Personal Investigation Records.

SECURITY CLASSIFICATION:

There is no specific security classification for this system; however, data or records within the system may have national defense/foreign policy classifications up through secret.

SYSTEM LOCATION:

Security Operations Center, Assistant Managing Director-Administrative Offices (AMD–AO), Office of Managing Director, Federal Communications Commission (FCC), 445 12th Street, SW., Room 1–B458, Washington, DC 20554.

CATEGORIES OF INDIVIDUALS COVERED BY THE SYSTEM:

1. Current and former FCC employees, applicants for employment in the Federal service, and contractors.

2. Individuals considered for access to classified information or restricted areas and/or security determinations such as contractors, experts, instructors, and consultants to Federal programs.

3. Individuals who are neither applicants nor employees of the Federal Government, but who are or were involved in Federal programs under a co-operative agreement.

CATEGORIES OF RECORDS IN THE SYSTEM:

1. Data needed to identify an individual and his/her security clearance for both FCC and contract employees: Individual's last, first, and middle names (filed alphabetically by last name); Social Security Number; date of birth; place of birth; Bureau/Office/Contractor Company; position title; security classification; types and dates of investigations; agency conducting investigation, investigation dates, clearance level granted, and position sensitivity level; and remarks.

2. Data needed to investigate an individual's character, conduct, and behavior in the community where he or she lives or lived; arrests and convictions for violations against the law; reports of interviews with present and former supervisors, co-workers, associates, educators, etc; reports about the individual's qualifications for a position; reports of inquiries with law enforcement agencies, employers, and educational institutions attended; reports of action after OPM or FBI Section 8(d) Full Field Investigation; Notices of Security Investigation and other information developed from the above described Certificates of Clearance; and in some instances, a photograph of the subject.

3. Data to needed to investigate allegations of misconduct by an FCC employee;

4. Data needed to investigate miscellaneous complaints not covered by the FCC's formal or informal grievance procedure; and

5. Data needed to conduct inquiries under the ''President's Program to Eliminate Waste and Fraud in Government.''

6. Data needed to investigate violence, threats, harassment, intimidation, or other inappropriate behavior that causes an FCC employee or contractor to fear for his/her personal safety in the FCC workplace: case number; victim's name; office telephone number; room number; organization bureau/office/division/branch; duty station; position; supervisor; supervisor's telephone number; location of incident; activity at time of incident; circumstances surrounding the incident; perpetrator; name(s) and telephone number(s) of witness(es); injured party(s); medical treatment(s); medical report; property damages; report(s) to police and/or Federal Protective Services; and other miscellaneous information.

AUTHORITY FOR MAINTENANCE OF THE SYSTEM:

5 CFR part 5; 29 CFR part 1960; 47 CFR 19.735–107; 5 U.S.C. 1303, 1304, 3301, 7902; and Executive Orders 10450, 11222, 12065, and 12196.

PURPOSE(S):

FCC Security Officer and the Personnel Security Specialist of the Security Office use the records in this system to provide investigative information to determine compliance with Federal regulations and/or to make a determination about an individual's suitability and fitness for Federal employment, access to classified information or restricted areas, position sensitivity, security clearances, evaluations of qualifications, and loyalty to the U.S.; to evaluate qualifications and suitability to perform contractual services for the U.S. Government; to document such determinations; to respond to an inquiry conducted under the President's Program to Eliminate Waste and Fraud in the Government; to take action on, or to respond to a complaint about a threat, harassment, intimidation, violence, or other inappropriate behavior involving one or more FCC employees and/or contract employees; and to counsel employees.

ROUTINE USES OF RECORDS MAINTAINED IN THE SYSTEM, INCLUDING CATEGORIES OF USERS AND THE PURPOSES OF SUCH USES:

1. A record from this system of records may be referred to the appropriate Federal, state, or local agency responsible for investigating or prosecuting a violation or for enforcing or implementing the statute, rule, regulation, or order where there is an indication of a violation or potential violation of a statute, regulation, rule, or order.

2. A record on an individual in this system of records may be disclosed to a

Congressional office in response to an inquiry an individual has made to the Congressional office.

3. A record for this system of records maybe disclosed to GSA and NARA for the purpose of records management inspections conducted under authority of 44 U.S.C. 2904 and 2906. Such disclosure shall not be used to make a determination about individuals.

4. A record on an individual in this system of records may be disclosed, where pertinent, in any legal proceeding to which the Commission is a party before a court or administrative body.

5. A record from this system may be disclosed to designated officers and employees of agencies, offices, and other establishments in the executive, legislative, and judicial branches of the Federal Government, and the District of Columbia Government, in response to their request, when such agency, office, or establishment conducts an investigation of the individual for the purpose of hiring, firing, or retention, granting a security clearance, making a determination of qualifications, suitability, or loyalty to the United States Government, or access to classified information or restricted areas, or classifying jobs, letting of a contract, or issuance of a license, grant, or other benefit by the requesting agency, to the extent that the information is relevant and necessary to the requesting agency's purpose.

6. A record from this system of records may be disclosed to the Department of Justice or in a proceeding before a court or adjudicatory body when:

(a) The United States, the Commission, a component of the Commission, or when represented by the government, an employee of the Commission is a party to litigation or anticipated litigation or has an interest in such litigation, and

(b) The Commission determines that the disclosure is relevant or necessary to the litigation.

7. A record from this system may be disclosed to the security officers of an agency in the executive, legislative, or judicial branch, or the District of Columbia Government, in response to their request(s) for verification of security clearances of FCC employees to have access to classified data or areas where their official duties require such access.

8. A record in this system may be disclosed to request information from a Federal, state, or local agency maintaining civil, criminal, or other relevant or pertinent enforcement information or records, such as licenses, if necessary to obtain information relevant to a Commission decision concerning the hiring or retention of an employee, the issuance of a security clearance, the letting of a contract, or the issuance of a grant or other benefit.

9. A record from this system may be disclosed to the Merit System Protection Board (MSPB) during the course of the MSPB's investigation of the individual's appeal, following the Commission's adverse action against the individual.

In each of these cases, the FCC will determine whether disclosure of the records is compatible with the purpose for which the records were collected.

DISCLOSURE TO CONSUMER REPORTING AGENCIES:

Not applicable.

POLICIES AND PRACTICES FOR STORING, RETRIEVING, ACCESSING, RETAINING, AND DISPOSING OF RECORDS IN THE SYSTEM:

STORAGE:

Records in this system of records include both paper and electronic records. Paper records are stored in file folders in security containers. The electronic records are maintained in a computer database.

RETRIEVABILITY:

Records are retrieved by individual's name and Social Security Number.

SAFEGUARDS:

Paper records are maintained in file folders and stored in approved security containers, within a secure, access-controlled area with an intrusion alarm. Access is limited to approved security office and administrative personnel.

The electronic records are maintained in a ''stand-alone'' computer database, which is secured through controlled access and passwords restricted to security and administrative personnel on a ''need to know'' basis. The computers are located in a room with a simplex lock and intrusive alarm systems. The computer databases are maintained on a computer that is not connected to the FCC computer network. The databases are backed-up on a daily basis to floppy disk(s), which are then stored in a secured area.

RETENTION AND DISPOSAL:

Both paper and electronic records are retained during employment or while an individual is actively involved in federal programs. As appropriate, records are returned to investigating agencies after employment terminates; otherwise, the records are retained for five years from the date that the employee leaves the Commission.

Investigative files and the computer database, which show the completion of an investigation, are retained for 15 years, except for investigations involving potential actionable issue(s), which will be maintained for 25 years plus the current year from the date of the most recent investigative activity.

Paper records are destroyed by shredding. Electronic records are destroyed by electronic erasure.

SYSTEM MANAGER(S) AND ADDRESS:

Security Office, Associate Managing Director—Administrative Operations (AMD–AO), Security Operations Center, Federal Communications Commission (FCC), 445 12th Street, SW., Room 1–B458, Washington, DC 20554.

NOTIFICATION, RECORD ACCESS AND CONTESTING RECORD PROCEDURES:

This system is exempt from the requirement that the agency publish the procedures for notifying an individual, at his or her request, if the system contains a record pertaining to him/her, for gaining access to such record, and for contesting the contents of the record.

RECORD SOURCE CATEGORIES:

This system is exempt from the requirement that the agency publish the categories of sources of records in this system.

EXEMPTION FROM CERTAIN PROVISIONS OF THE ACT:

This system of records is exempt from sections (c)(3), (d), (e)(4)(G), (H), and (I), and (f) of the *Privacy Act of 1974,* 5 U.S.C. 552a, and from 47 CFR 0.554–0.557 of the Commission's rules. These provisions concern the notification, record access, and contesting procedures described above, and also the publication of record sources. The system is exempt from these provisions because it contains the following types of information:

1. Investigative material compiled for law enforcement purposes as defined in Section (k)(2) of the Privacy Act.

2. Properly classified information, obtained from another Federal agency during the course of a personnel investigation, which pertains to national defense and foreign policy, as stated in Section (k)(1) of the Privacy Act.

3. Investigative material compiled solely for the purpose of determining suitability, eligibility, or qualifications for Federal civilian employment, as described in Section (k)(5) of the Privacy Act, as amended.

Federal Communications Commission.

Marlene H. Dortch,

Secretary.

[FR Doc. 03–1195 Filed 1–17–03; 8:45 am]

BILLING CODE 6712–01–P

FEDERAL RESERVE SYSTEM

Change in Bank Control Notices; Acquisition of Shares of Bank or Bank Holding Companies

The notificants listed below have applied under the Change in Bank Control Act (12 U.S.C. 1817(j)) and § 225.41 of the Board's Regulation Y (12 CFR 225.41) to acquire a bank or bank holding company. The factors that are considered in acting on the notices are set forth in paragraph 7 of the Act (12 U.S.C. 1817(j)(7)).

The notices are available for immediate inspection at the Federal Reserve Bank indicated. The notices also will be available for inspection at the office of the Board of Governors. Interested persons may express their views in writing to the Reserve Bank indicated for that notice or to the offices of the Board of Governors. Comments must be received not later than February 4, 2003.

A. Federal Reserve Bank of Atlanta (Sue Costello, Vice President) 1000 Peachtree Street, N.E., Atlanta, Georgia 30309–4470:

1. L. Michael Ashbrook, Monroe, Louisiana and Charles Bruce, Cut Off, Louisiana; to acquire the outstanding shares of FBT Bancorp, Inc., Baton Rouge, Louisiana, and thereby indirectly acquire Fidelity Bank and Trust Company, Baton Rouge, Louisiana.

Board of Governors of the Federal Reserve System, January 14, 2003.

Robert deV. Frierson,

Deputy Secretary of the Board.

[FR Doc. 03–1167 Filed 1–17–03; 8:45 am]

BILLING CODE 6210–01–S

FEDERAL RESERVE SYSTEM

Formations of, Acquisitions by, and Mergers of Bank Holding Companies

The companies listed in this notice have applied to the Board for approval, pursuant to the Bank Holding Company Act of 1956 (12 U.S.C. 1841 *et seq.*) (BHC Act), Regulation Y (12 CFR Part 225), and all other applicable statutes and regulations to become a bank holding company and/or to acquire the assets or the ownership of, control of, or the power to vote shares of a bank or bank holding company and all of the banks and nonbanking companies owned by the bank holding company, including the companies listed below.

The applications listed below, as well as other related filings required by the Board, are available for immediate inspection at the Federal Reserve Bank indicated. The application also will be available for inspection at the offices of the Board of Governors. Interested persons may express their views in writing on the standards enumerated in the BHC Act (12 U.S.C. 1842(c)). If the proposal also involves the acquisition of a nonbanking company, the review also includes whether the acquisition of the nonbanking company complies with the standards in section 4 of the BHC Act (12 U.S.C. 1843). Unless otherwise noted, nonbanking activities will be conducted throughout the United States. Additional information on all bank holding companies may be obtained from the National Information Center website at www.ffiec.gov/nic/.

Unless otherwise noted, comments regarding each of these applications must be received at the Reserve Bank indicated or the offices of the Board of Governors not later than February 14, 2003.

A. Federal Reserve Bank of Atlanta (Sue Costello, Vice President) 1000 Peachtree Street, N.E., Atlanta, Georgia 30309–4470:

1. United Community Banks, Inc., Blairsville, Georgia; to merge with First Central Bancshares, Inc., Lenoir City, Tennessee, and thereby indirectly acquire First Central Bank, Lenoir City, Tennessee.

Board of Governors of the Federal Reserve System, January 14, 2003.

Robert deV. Frierson,

Deputy Secretary of the Board.

[FR Doc. 03–1168 Filed 1–17–03; 8:45 am]

BILLING CODE 6210–01–S

FEDERAL TRADE COMMISSION

[Docket No. 9304]

Quicken Loans Inc.; Analysis to Aid Public Comment

AGENCY: Federal Trade Commission.

ACTION: Proposed consent agreement.

SUMMARY: The consent agreement in this matter settles alleged violations of federal law prohibiting unfair or deceptive acts or practices or unfair methods of competition. The attached Analysis to Aid Public Comment describes both the allegations in the complaint and the terms of the consent order—embodied in the consent agreement—that would settle these allegations.

DATES: Comments must be received on or before January 29, 2003.

ADDRESSES: Comments filed in paper form should be directed to: FTC/Office of the Secretary, Room 159–H, 600 Pennsylvania Avenue, NW., Washington, DC 20580. Comments filed in electronic form should be directed to: *consentagreement@ftc.gov.,* as prescribed below.

FOR FURTHER INFORMATION CONTACT: Bradley Blower or Thomas Kane, FTC, Bureau of Consumer Protection, 600 Pennsylvania Avenue, NW., Washington, DC 20580, (202) 326–3224.

SUPPLEMENTARY INFORMATION: Pursuant to section 6(f) of the Federal Trade Commission Act, 38 Stat. 721, 15 U.S.C. 46(f), and section 3.25(f) of the Commission's Rules of Practice, 16 CFR 3.25(f), notice is hereby given that the above-captioned consent agreement containing a consent order to cease and desist, having been filed with and accepted, subject to final approval, by the commission, has been placed on the public record for a period of thirty (30) days. The following Analysis to Aid Public Comment describes the terms of the consent agreement, and the allegations in the complaint. An electronic copy of the full text of the consent agreement package can be obtained from the FTC Home Page (for December 30, 2002), on the World Wide Web, at ''http://www.ftc.gov/os/2002/12/index.htm.'' A paper copy can be obtained from the FTC Public Reference Room, Room 130–H, 600 Pennsylvania Avenue, NW., Washington, DC 20580, either in person or by calling (202) 326–2222.

Public comments are invited, and may be filed with the Commission in either paper or electronic form. Comments filed in paper form should be directed to: FTC/Office of the Secretary, Room 159–H, 600 Pennsylvania Avenue, NW., Washington, DC 20580. If a comment contains nonpublic information, it must be filed in paper form, and the first page of the document must be clearly labeled ''confidential.'' Comments that do not contain any nonpublic information may instead be filed in electronic form (in ASCII format, WordPerfect, or Microsoft Word) as part of or as an attachment to e-mail messages directed to the following e-mail box: *consentagreement@ftc.gov.* Such comments will be considered by the Commission and will be available for inspection and copying at its principal office in accordance with section 4.9(b)(6)(ii) of the Commission's Rules of Practice, 16 CFR 4.9(b)(6)(ii)).

Analysis of Proposed Consent Order To Aid Public Comment

The Federal Trade Commission has accepted an agreement, subject to final approval, to a proposed consent order from Quicken Loans Inc. The proposed order would settle charges that Quicken

Loans violated Section 615(a) of the Fair Credit Reporting Act (''FCRA''), 15 U.S.C. 1681m(a), and Section 5 of the Federal Trade Commission Act. Section 615(a) requires that a credit grantor who takes adverse action with respect to a consumer, based in whole or in part on information contained in a credit report (''consumer report''), notify the consumer of the adverse action as well as the identity of the credit bureau (''consumer reporting agency'') that produced the report, so the consumer can identify and correct any inaccuracies in the report.

The proposed consent order has been placed on the public record for thirty (30) days for receipt of comments by interested persons. Comments received during this period will become part of the public record. After thirty (30) days, the Commission will again review the agreement and the comments received and will decide whether it should withdraw from the agreement and take other appropriate action or make final the agreement's proposed order.

According to the Commission's Complaint, for a period of approximately one year, Quicken Loans offered loans to consumers through its website. Quicken Loans invited consumers to submit information, such as their income and assets, and the loan amount, down payment and type of loan sought. Consumers then were invited to request that Quicken Loans either ''prequalify'' the consumer for a loan based solely on information the consumer had entered, or ''preapprove'' the consumer for a loan based on the consumer's consumer report, as well as the consumer-supplied information. To select the preapproval option, consumers were required to click a radio button next to the statement ''Order my credit report and use it to preapprove me for a loan.'' According to the Complaint, by selecting this option, consumers were filing applications for preapproval of a loan.

For those consumers who requested preapproval, Quicken Loans obtained consumer report from consumer reporting agencies and used the reports, along with consumer-supplied information, to evaluate the consumers' creditworthiness for any of its online loan products. For those consumers whom Quicken Loans preapproved for one of its online loan products, respondent provided an online preapproval letter containing the specific terms (e.g., loan amount, interest rate, points, and APR) of the loans for which the consumers were preapproved.

Those consumers whom respondent did not preapprove for one of its online loan products received an online advisory informing them that, ''[b]ased on the information you have provided, it appears that you have unique borrowing needs.'' Quicken Loans invited these consumers to click a button reading ''NEXT STEP'' to permit a Quicken Loans loan consultant to contact them about other possible Quicken Loans loan options. The Commission's Complaint alleges that the message communicated through the advisory was that consumers' online applications for preapproval had been denied. As a result, many consumers who received this advisory left the website without submitting contact information. Consumers who received the ''unique borrowing needs'' advisory but did not then submit contact information online received no further contact from respondent. The Complaint alleges that, through the actions described above, Quicken Loans took adverse action with respect to consumers in some instances, based in whole or in part on information contained in consumer reports, but failed to provide the notice required by Section 615.

Part I of the proposed order requires that whenever Quicken Loans takes adverse action with respect to a consumer's application for credit, based either wholly or partly on information in a consumer report, Quicken Loans must provide the consumer with a notice that complies with Section 615(a). Part I also provides that the Commission would not view Quicken Loans' failure to grant an online request for preapproval as an adverse action if the company meets certain specific requirements, which include that (1) Quicken Loans provides a clear and conspicuous disclosure in close proximity to the preapproval offer that preapproval may be granted online or offline; and (2) if Quicken Loans determines it cannot grant preapproval online because it needs additional information, it will notify the consumer that (a) the request for preapproval has not been denied, but rather that Quicken Loans needs additional information from the consumers, and (b) if the consumer submits the additional information, Quicken Loans will determine whether to grant the request and communicate the decision to the consumer.

Parts II through VI of the proposed order are reporting and compliance provisions. Part II requires that Quicken Loans maintain and make available for Federal Trade Commission inspection and copying documents demonstrating compliance with Part I of the order. Part III requires dissemination of the order now and in the future to persons with responsibilities relating to the subject matter of the order. Part IV ensures notification to the FTC of changes in corporate status. Part V mandates compliance reports within sixty (60) days after service of the order and at such other times as the FTC may require. Part VI is a provision ''sunsetting'' the order after twenty (20) years, with certain exceptions.

The purpose of this analysis is to facilitate public comment on the proposed order, and is not intended to constitute an official interpretation of the agreement and proposed order or to modify in any way their terms.

This proposed order, if issued in final form, will resolve the claims alleged in the complaint against the named respondent. It is not the Commission's intent that acceptance of this consent agreement and issuance of a final decision and order will release any claims against any unnamed persons or entities associated with the conduct described in the complaint.

By direction of the Commission.

Donald S. Clark,

Secretary.

[FR Doc. 03–1215 Filed 1–17–03; 8:45 am]

BILLING CODE 6750–01–M

GENERAL SERVICES ADMINISTRATION

[FMR Bulletin 2003–B1]

Federal Management Regulation; Locating Federal Facilities in Rural Areas

AGENCY: Office of Governmentwide Policy (MPR), GSA.

ACTION: Notice of a bulletin.

SUMMARY: The attached bulletin is intended to assist Federal agencies, having their own statutory authority to acquire real property, in complying with the Rural Development Act of 1972.

EFFECTIVE DATE: This bulletin is effective January 21, 2003.

FOR FURTHER INFORMATION CONTACT: Stanley C. Langfeld, General Services Administration, Office of Governmentwide Policy (MPR), Washington, DC 20405; e-mail, *stanley.langfeld@gsa.gov*, telephone (202) 501–1737.

SUPPLEMENTARY INFORMATION: In July 2001, GAO issued GAO Final Report GAO–01–805, entitled ''Facilities Location: Agencies Should Pay More Attention to Costs and Rural Development Act,'' which examined the Federal laws and policies governing

facility location and the extent that agencies were implementing these laws and policies. In addition, the GAO report identified recommendations to be implemented by GSA. In October 2001, in response to a recommendation contained in the GAO Report, GSA agreed to issue a **Federal Register** bulletin that defines the term ''rural area'' and recommends that Federal agencies, having their own statutory authority to acquire real property, include a written statement in their files affirming that they have given first priority to locating in a rural area.

Dated: January 13, 2003.

G. Martin Wagner,

Associate Administrator, Office of Governmentwide Policy.

GENERAL SERVICES ADMINISTRATION

[FMR Bulletin 2003–B1]

Real Property

TO: Heads of Federal Agencies
SUBJECT: Locating Federal Facilities in Rural Areas

1. *What is the purpose of this bulletin?* This bulletin is intended to assist Federal agencies, having their own statutory authority to acquire real property, in complying with the Rural Development Act of 1972.

2. *What is the effective date of this bulletin?* This bulletin is effective January 21, 2003.

3. *When does this bulletin expire?* This bulletin will remain in effect indefinitely until specifically cancelled.

4. *What is the background?*

a. In 1972, the Rural Development Act was enacted which directed Federal agencies to develop policies and procedures to give first priority to the location of new offices and other Federal facilities in rural areas. The intent of the Act is to revitalize and develop rural areas and help foster a balance between rural and urban America.

b. In 1996, Pub. L. 104–127 eliminated the ''private business enterprise'' language in 7 U.S.C. 1926(a)(7) which had served to define the term ''rural area'' for the purpose of locating Federal facilities.

c. In July 2001, GAO issued GAO Final Report GAO–01–805, entitled ''Facilities Location: Agencies Should Pay More Attention to Costs and Rural Development Act,'' which examined the federal laws and policies governing facility location and the extent that agencies were implementing these laws and policies. In addition, the GAO report identified recommendations to be implemented by GSA.

d. In October 2001, in response to a recommendation contained in the GAO Report, GSA agreed to issue a **Federal Register** bulletin that defines the term ''rural area'' and recommends that Federal agencies, having their own statutory authority to acquire real property, include a written statement in their files affirming that they have given first priority to locating in a rural area.

5. *What ''rural area'' definition does GSA recommend for Federal agencies having their own statutory authority to acquire real property?*

GSA recommends that Federal agencies, having their own statutory authority to acquire real property, use the following ''rural area'' definition:

''Rural area means a city, town, or unincorporated area that has a population of 50,000 inhabitants or less, other than an urbanized area immediately adjacent to a city, town, or unincorporated area that has a population in excess of 50,000 inhabitants, as specified in 7 U.S.C. 2009.''

6. *How does GSA recommend that Federal agencies, having their own real property authority, demonstrate compliance with the Rural Development Act?*

GSA recommends that Federal agencies, having their own statutory authority to acquire real property, demonstrate compliance with the Rural Development Act by including a written statement in their files affirming that they have given first priority to the location of new offices and other Federal facilities in rural areas.

7. *Who should we contact for further information regarding locating Federal facilities in rural areas?*

General Services Administration, Office of Governmentwide Policy, Real Property Policy Division, *Attn:* Stanley C. Langfeld, 1800 F Street, NW., Washington, DC 20405, *Telephone Number:* (202) 501–1737, *E-mail Address:* stanley.langfeld@gsa.gov.

[FR Doc. 03–1183 Filed 1–17–03; 8:45 am]

BILLING CODE 6820–23–P

DEPARTMENT OF HEALTH AND HUMAN SERVICES

Centers for Disease Control and Prevention

[60Day–03–36]

Proposed Data Collections Submitted for Public Comment and Recommendations

In compliance with the requirement of section 3506(c)(2)(A) of the Paperwork Reduction Act of 1995 for opportunity for public comment on proposed data collection projects, the Centers for Disease Control and Prevention (CDC) will publish periodic summaries of proposed projects. To request more information on the proposed projects or to obtain a copy of the data collection plans and instruments, call the CDC Reports Clearance Officer on (404) 498–1210.

Comments are invited on: (a) Whether the proposed collection of information is necessary for the proper performance of the functions of the agency, including whether the information shall have practical utility; (b) the accuracy of the agency's estimate of the burden of the proposed collection of information; (c) ways to enhance the quality, utility, and clarity of the information to be collected; and (d) ways to minimize the burden of the collection of information on respondents, including through the use of automated collection techniques or other forms of information technology. Send comments to Seleda Perryman , CDC Assistant Reports Clearance Officer, 1600 Clifton Road, MS–D24, Atlanta, GA 30333. Written comments should be received within 60 days of this notice.

Proposed Project: Epidemiologic Study Of Gastrointestinal Health Effects And Exposure To Disinfection By-products Associated With Consumption Of Conventionally Treated Groundwater—New—National Center for Environmental Health (NCEH), Centers for Disease Control and Prevention (CDC).

Background

The primary goal of drinking water treatment is the removal of microorganisms responsible for waterborne disease. The addition of disinfectants such as chlorine is one of the most important steps in pathogen inactivation and may in some cases (such as in many groundwater systems) be the only treatment employed. However, chlorine also reacts with organic compounds in the water to produce halogenated organic by-products (disinfection by-products [DBPs]). One of the most commonly measured groups of DBPs is the trihalomethanes (THMs). Human exposure to THMs has been associated with bladder and colorectal cancer. Public water providers must constantly balance the acute risks of gastrointestinal (GI) illness associated with exposure to microbial pathogens against the long-term risks associated with exposure to DBPs.

This study will estimate the risks for endemic GI illness associated with

drinking conventionally treated groundwater and evaluate exposure to THMs in the same people. We plan to recruit 900 households who report that they drink unfiltered tap water from a specific public water system that treats and distributes water from a groundwater source. This utility has agreed to collaborate on the study. The study households will be randomized into one of three groups: (1) Households drinking highly treated bottled water purchased from a bottled water company, (2) households drinking groundwater that has been conventionally treated by the collaborating utility and collected and bottled at the water treatment plant (bottled plant water), or (3) households drinking municipal tap water from the distribution system of the collaborating utility (tap water). We will administer a questionnaire at the beginning of the study to collect data about water use habits and possible exposures to microbial pathogens and THMs. Each study household also will be called weekly for 52 weeks for a short telephone interview to document whether anyone in the household had any gastrointestinal symptoms during the past week. Blood and serum samples will be collected from a subset (50%) of adult household members at the beginning and end of the study. All household members will be asked to provide a saliva specimen each month for the duration of the one-year study. Stool specimens will be collected during episodes of GI symptoms. Blood samples will be analyzed for THMs, and serum, saliva, and stool samples will be stored for later analysis for enteric pathogens. Water samples will be collected from each participating household at the beginning and a subset (50%) of the households at the end of the study and analyzed for THMs. Water samples for microbial analysis will be taken routinely from the source, the finished water, and designated locations in the distribution system.

The specific aims of the study are to (1) determine the risk for GI illness associated with source water quality and treatment efficacy by comparing GI illness rates in people drinking highly treated bottled water with GI illness rates in people drinking bottled plant water; (2) determine the risk for GI illness associated with the distribution system by comparing GI illness rates in people drinking bottled plant water with GI illness rates in people drinking tap water; (3) determine water concentrations and associated blood concentrations of THMs in the study population; and (4) validate and refine existing models of THM exposure using the THM data collected at the participating households and hydraulic and water quality data collected in the distribution system at the time of household recruitment. There is no cost to respondents.

Respondents	Number of respondents	Number of responses/respondent	Average burden/response (in hours)	Total burden (in hours)
Telephone contact	2,500	1	10/60	417
Household survey	900	1	30/60	450
Blood and serum sample collection	900	2	15/60	450
Initial tap water sample collection	900	1	10/60	150
Final tap water sample collection	450	1	10/60	75
Weekly telephone interview	900	52	15/60	780
Saliva specimen collection	900	12	5/60	900
Stool specimen collection	900	2	5/60	150
Total				3,372

Dated: January 10, 2003.

Thomas Bartenfeld,

Acting Associate Director for Policy, Planning and Evaluation, Centers for Disease Control and Prevention.

[FR Doc. 03–1180 Filed 1–17–03; 8:45 am]

BILLING CODE 4163–18–P

DEPARTMENT OF HEALTH AND HUMAN SERVICES

Centers for Disease Control and Prevention

[30DAY–18–03]

Agency Forms Undergoing Paperwork Reduction Act Review

The Centers for Disease Control and Prevention (CDC) publishes a list of information collection requests under review by the Office of Management and Budget (OMB) in compliance with the Paperwork Reduction Act (44 U.S.C. chapter 35). To request a copy of these requests, call the CDC Reports Clearance Officer at (404) 498–1210. Send written comments to CDC, Desk Officer, Human Resources and Housing Branch, New Executive Office Building, Room 10235, Washington, DC 20503. Written comments should be received within 30 days of this notice.

Proposed Project: Youth Media Campaign Tracking Study—New—National Center for Chronic Disease Prevention and Health Promotion (NCCDPHP), Centers for Disease Control and Prevention (CDC). CDC plans to conduct ongoing monitoring of the awareness and reaction to the brand and messages of the Youth Media Campaign. In FY 2001, Congress established the Youth Media Campaign at the Centers for Disease Control and Prevention (CDC). Specifically, the House Appropriations Language said: The Committee believes that, if we are to have a positive impact on the future health of the American population, we must change the behaviors of our children and young adults by reaching them with important health messages. CDC, working in collaboration with federal partners, is coordinating an effort to plan, implement, and evaluate a campaign designed to clearly communicate messages that will help kids develop habits that foster good health over a lifetime.

The Campaign will be based on principles that have been shown to enhance success, including: Designing messages based on research; testing messages with the intended audiences; involving young people in all aspects of Campaign planning and implementation; enlisting the involvement and support of parents and other influencers; tracking the Campaign's effectiveness and revising Campaign messages and strategies as needed.

For the Campaign to be successful, ongoing monitoring of the campaign's penetration with the target audiences is essential. Campaign planners must have mechanisms to determine the targets' awareness of, and reaction to, the campaign brand and messages as the campaign evolves. Campaign planners also need to identify which messages

are likely to have the greatest impact on attitudes and desired behaviors. The purpose of this monitoring strategy is to continually assess and improve the effectiveness of the targeted communication and other marketing variables throughout the evolution of the campaign. Another important objective is to determine which media channels are most effective'to optimize communication variables such as weight levels, frequency and reach components, programming formats, etc. that will have the greatest effect upon communicating the desired message to the target audiences. As the marketing efforts are implemented in selected cities, the Campaign planners also want to evaluate which strategies are most effective in which locales.

The Youth Media Campaign will use a tracking methodology using age-targeted samples. Tracking methods may include, but are not limited to telephone surveys, telephone or in-person focus groups, web-based surveys, or intercept interviews with tweens, parents, other teen influencers and adult influencers nationally and in cities with YMC-hosted events. Continuous tracking of awareness of the brand and the advertising messages are standard tools in advertising and marketing. The commitment of resources to YMC's marketing efforts mandates that campaign planners be able to respond quickly to changes needed in message execution or delivery as is standard practice in the advertising industry. The total burden for this data collection is 2,285 hours.

Survey	Respondents	Number of respondents	Number of responses per respondent	Average burden per response (in hrs.)
Media Benchmarking Survey	Screener	7,170	1	2/60
	Parent	650	1	3/60
	Child	650	1	12/60
Continuous Tracking Survey (national & community).	Screener	29,076	1	1/60
	Parent	7,200	1	3/60
	Child	7,200	1	12/60

Dated: January 10, 2003.

Thomas Bartenfeld,

Acting Associate Director for Policy, Planning and Evaluation, Centers for Disease Control and Prevention.

[FR Doc. 03–1177 Filed 1–17–03; 8:45 am]

BILLING CODE 4163–18–P

DEPARTMENT OF HEALTH AND HUMAN SERVICES

Centers for Disease Control and Prevention

[30DAY–19–03]

Agency Forms Undergoing Paperwork Reduction Act Review

The Centers for Disease Control and Prevention (CDC) publishes a list of information collection requests under review by the Office of Management and Budget (OMB) in compliance with the Paperwork Reduction Act (44 U.S.C. chapter 35). To request a copy of these requests, call the CDC Reports Clearance Officer at (404) 498–1210. Send written comments to CDC, Desk Officer, Human Resources and Housing Branch, New Executive Office Building, Room 10235, Washington, DC 20503. Written comments should be received within 30 days of this notice.

Proposed Project: Evaluation of the ACT (Adults and Children Together) Against Violence Community Training Program—New—National Center for Injury Prevention and Control (NCIPC), Centers for Disease Control and Prevention (CDC). The goal of the ACT Against Violence Community Training Program is to make early violence prevention a central and ongoing part of a community's violence prevention efforts. The program involves a training curriculum developed by child development and violence prevention experts. The curriculum is designed to help communities: (1) Disseminate information and skills on violence prevention to adults who raise, care for, and teach young children; (2) identify and select early violence prevention programs, materials, and resources; (3) work in collaborative efforts established among community-based organizations; and (4) develop early childhood violence prevention action plans.

The purpose of the evaluation is to assess pilot implementations of the ACT Community Training Program in three communities: Monterey, CA; Randolph, NJ; and Kansas City, MO. The objectives of the evaluation are to (1) assess whether the Community Training Program is being successfully disseminated and implemented; (2) examine factors that affect successful dissemination, adoption, and implementation of the training program; (3) compare findings across the three sites; and (4) assess the involvement of the public health sector in each of the three sites.

Data collected for the evaluation will provide much-needed information on the dissemination and implementation of one of the successful strategies summarized in the Best Practices of Youth Violence Prevention. The results of the evaluation will assist the Division of Violence Prevention and the National Center for Injury Prevention and Control in carrying out CDC's mission of protecting the health of the United States public by providing leadership in preventing and controlling injuries through research, surveillance, implementation of programs, and communication. The evaluation will include semi-structured interviews with local and national program stakeholders (forms 1 and 2), focus groups with a subset of ACT trainees (''facilitators'') during a site visit (form 3), and a half-hour telephone survey with the universe of ACT trainees at 6 months with e-mail follow-ups at 2 months and 12 months (form 4). In addition, we will follow-up with a small subset of ''adult community members'' reached by ACT trainees with a half-hour telephone survey (form 5). Presented below is the estimated respondent burden for the telephone surveys, semi-structured interviews, and focus groups, respectively. There are no costs to respondents.

Form and type of respondent	Number of respondents	Number of responses/respondent	Average burden/response (in hours)	Total burden (in hours)
Local-level program stakeholders—interview (form 1)	10	1	1	10
Facilities—screening (as part of consent procedures for both survey and focus groups)	75	1	1/60	1.25
Facilitators—Survey (form 2)	60	1	30/60	30
Facilitators—focus groups (form 3)	60	1	90/60	90
Adult Community members—screening (as part of consent procedure for survey)	250	1	1/60	4.17
Adult community members—survey (form 4)	200	1	15/60	50
Total				185.42

Dated: January 10, 2003.

Thomas Bartenfeld,

Acting Associate Director for Policy, Planning and Evaluation, Centers for Disease Control and Prevention.

[FR Doc. 03–1178 Filed 1–17–03; 8:45 am]

BILLING CODE 4163–18–P

DEPARTMENT OF HEALTH AND HUMAN SERVICES

Centers for Disease Control and Prevention

[30DAY–20–03]

Agency Forms Undergoing Paperwork Reduction Act Review

The Centers for Disease Control and Prevention (CDC) publishes a list of information collection requests under review by the Office of Management and Budget (OMB) in compliance with the Paperwork Reduction Act (44 U.S.C. chapter 35). To request a copy of these requests, call the CDC Reports Clearance Officer at (404) 498–1210. Send written comments to CDC, Desk Officer, Human Resources and Housing Branch, New Executive Office Building, Room 10235, Washington, DC 20503. Written comments should be received within 30 days of this notice.

Proposed Project: National Public Health Performance Standards Program Local Public Health Governance Performance Assessment Instrument—New—Public Health Practice Program Office (PHPPO), Centers for Disease Control and Prevention (CDC).

Since 1998, the CDC National Public Health Performance Standards Program has convened workgroups with the National Association of County and City Health Officials (NACCHO), the Association of State and Territorial Health Officials (ASTHO), the National Association of Local Boards of Health (NALBOH), the American Public Health Association (APHA), and the Public Health Foundation (PHF) to develop performance standards for public health systems based on the ten Essential Services of Public Health. In the spring of 2001, CDC conducted field tests with the local public health governance instruments in the state of Massachusetts.

CDC is now proposing to implement a voluntary data collection to assess the capacity of local boards of health to deliver the Essential Public Health Services. This data collection will provide a framework for local boards of health to evaluate their effectiveness. Electronic data submission will be the method of choice. If computer technology in local jurisdictions does not support electronic submission, hard copy survey instruments will be available. Local jurisdictions using hard copy survey instruments will receive assistance from State or local level field coordinators for web-based data entry.

Local boards of health will respond to the survey. An estimated 33 percent of approximately 3,200 United States local boards are expected to participate in the National Performance Standards Program per year. The annual burden hours are estimated to be 6402.

Respondents	Number of respondents	Number of responses/respondent	Average burden/response (in hours)
Local Boards of Health Year 1	1,066	1	6
Local Boards of Health Year 2	1,067	1	6
Local Boards of Health Year 3	1,067	1	6

Dated: January 10, 2003.

Thomas Bartenfeld,

Acting Associate Director for Policy, Planning and Evaluation, Centers for Disease Control and Prevention.

[FR Doc. 03–1179 Filed 1–17–03; 8:45 am]

BILLING CODE 4163–18–P

DEPARTMENT OF HEALTH AND HUMAN SERVICES

Centers for Disease Control and Prevention

[Program Announcement 02060–FY03]

National Cancer Prevention and Control Program; Open Season; Notice of Availability Funds

A. Purpose

The Centers for Disease Control and Prevention (CDC) announces the availability of fiscal year (FY) 2003 funds for an Open Season for the National Cancer Prevention and Control Program (NCPCP) cooperative agreement program previously announced in Program Announcement 02060, National Cancer Prevention and Control Program (Henceforth referred to as PA 02060.) This program addresses the ''Healthy People 2010'' focus areas related to cancer.

PA 02060 was published in the **Federal Register** on April 23, 2002, Volume 67, Number 78, pages 19932–19950. Amendment 1 was published May 23, 2002, and Amendment 2 was published January 2, 2003. Applicants may access the amended version of PA

02060, along with this Open Season announcement, on the CDC Web site, Internet address: *http://www.cdc.gov.*

Click on ''Funding,'' then ''Grants and Cooperative Agreements.'' sections A.–F. of the original PA 02060 are superceded by sections A.–F. published in this Open Season announcement. If you do not have access to the Internet, or if you have difficulty accessing the announcements on-line, you may call the CDC Procurement and Grants Office, Technical Information Management Section at 770–488–2700 for assistance.

The NCPCP will assist States/District of Columbia/Tribes/Territories in developing, implementing, maintaining, enhancing, integrating, and evaluating a cancer program inclusive of cancer surveillance, prevention, and early detection programs, with a focus on eliminating health disparities. The purpose of each of the three programmatic components within the NCPCP is as follows:

A.1. National Comprehensive Cancer Control Programs (NCCCP)

The NCCCP component supports the planning and implementation of comprehensive cancer control activities. CDC defines comprehensive cancer control as an integrated and coordinated approach to reduce the incidence, morbidity and mortality of cancer through prevention, early detection, treatment, rehabilitation, and palliation.

A.2. National Breast and Cervical Cancer Early Detection Program (NBCCEDP)

The NBCCEDP component supports the development of systems to assure breast and cervical cancer screening for low income, underserved, and uninsured women with special emphasis on reaching those who are geographically or culturally isolated, older, or members of racial/ethnic minorities. Components of the NBCCEDP include surveillance, partnership development, screening, referral and follow-up, quality assurance, public and provider education, and evaluation. These components are carried out at the local, State and national levels through collaborative partnerships with State health agencies, community-based organizations, tribal governments, universities, a variety of medical care providers and related agencies and institutions, and the business and voluntary sectors. These partners work together to develop, implement and evaluate strategies to promote breast and cervical cancer prevention and early detection, to increase access to related services and to improve the quality and timeliness of the services.

A.3. National Program of Cancer Registries (NPCR)

The NPCR component supports efforts to establish population-based cancer registries where they do not exist and to improve existing cancer registries.

The amended PA 02060 contains information that is specific to the three individual components. Section G ''Specific Guidance for NCCCP'' addresses the National Comprehensive Cancer Control Program; section H ''Specific Guidance for NBCCEDP'' addresses the National Breast and Cervical Cancer Early Detection Program; and section I ''Specific Guidance for NPCR'' addresses the National Program of Cancer Registries. These component sections include specific guidance regarding:

- Eligibility
- Program Requirements
- Application Content
- Other Requirements
- Evaluation Criteria

Please refer to these specific component sections in the amended PA 02060 for additional information.

Special Guidelines for Technical Assistance

Conference Call

Technical assistance will be available for potential applicants on a conference call. The call will take place on Tuesday, January 28, 2003, from 3 p.m. eastern standard time until 5 p.m. eastern standard time.

Potential applicants are requested to call in using only one telephone line. The conference can be accessed by calling 1–800–713–1971, or 404–639–4100, and entering access code 553768. The purpose of the conference call is to help potential applicants to:

1. Understand the process for the Open Season Announcement for PA 02060 for the National Cancer Prevention and Control Program.
2. Understand the scope and intent of PA 02060 for the National Cancer Prevention and Control Program.
3. Be familiar with the Public Health Services funding policies and application and review procedures.

Participation in this conference call is not mandatory. At the time of the call, if you have problems accessing the conference call, please call 404–639–7550.

B. Eligible Applicants

Applicants may apply for any or all of the components within this Open Season announcement for which they are eligible. Eligibility Criteria for each component are as follows:

B.1. Eligible for NCCCP

Potential applicants that are eligible for components of NCCCP are the health departments of States or their *bona fide* agents, the District of Columbia, the Commonwealth of Puerto Rico, the Virgin Islands, the Commonwealth of the Northern Mariana Islands, American Samoa, Guam, the Federated States of Micronesia, the Republic of the Marshall Islands, the Republic of Palau, and Federally recognized Indian tribal governments and tribal organizations, urban Indian organizations and inter-tribal consortia (hereafter referred to as tribes) whose primary purpose is to improve American Indian/Alaska Native health and which represent the Native population in their catchment area, that are not currently funded for NCCCP under PA 02060.

B.2. Eligible for NBCCEDP

Potential applicants that are eligible for NBCCEDP are the Virgin Islands, the Commonwealth of the Northern Mariana Islands, American Samoa, Guam, the Federated States of Micronesia, the Republic of the Marshall Islands, the Republic of Palau, and Federally recognized Indian tribal governments and tribal organizations, urban Indian organizations and inter-tribal consortia (hereafter referred to as tribes) whose primary purpose is to improve American Indian/Alaska Native health and which represent the Native population in their catchment area, that are not currently funded for NBCCEDP under PA 02060.

B.3. Eligible for NPCR

Potential applicants that are eligible for components of NPCR are the health departments of States or their bona fide agents, the District of Columbia, the Commonwealth of Puerto Rico, the Virgin Islands, the Commonwealth of the Northern Mariana Islands, American Samoa, Guam, the Federated States of Micronesia, the Republic of the Marshall Islands, the Republic of Palau, and academic or nonprofit organizations designated by the State to operate the State's cancer registry, that are not currently funded under PA 02060.

Note: Title 2 of the United States Code section 1611 states that an organization described in section 501(c)(4) of the Internal Revenue Code that engages in lobbying activities is not eligible to receive Federal funds constituting an award, grant or loan.

C. Funds

Availability of Funds

Pending availability of FY 2003 funds, approximately $6,250,000 is available in FY 2003 to fund new programs under the Open Season for PA 02060–FY03.

Awards under PA 02060 were made for a Project Period of September 30, 2002, through June 29, 2007. The first budget period was September 30, 2002, through June 29, 2003. Awards under this Open Season announcement will be for a Project Period of June 30, 2003, through June 29, 2007, with a budget period of June 30, 2003, through June 29, 2004. Future budget periods will be 12-month periods, and will begin on June 30 of every year and run through June 29 of each following year. These budget periods will occur until the expiration of the project period for PA 02060, which is June 29, 2007.

Component Funding

NCCCP—$1,000,000
NBCCEDP—$2,000,000
NPCR—$250,000

NCCCP—Optional Funding available for recipients of NCCCP Implementation Programs as follows:

- Colorectal cancer activities—$1,000,000
- Ovarian cancer activities—$1,000,000
- Prostate cancer activities—$1,000,000

Funding Preference

In accordance with the ''Funding Preference'' section of the amended PA 02060, funding preference may be given to applicants from previous year's applications who were considered Approved but Unfunded (ABU). Criteria for determining which programs would be eligible for this consideration were based on an acceptable score from the previous (fiscal year 2002) objective review. Funding preference will be given to NCCCP Planning applicants, including: California, Delaware, Fon du Lac Reservation, Indiana, Kansas, Missouri, Nevada, New Hampshire, Oklahoma, Oregon, South Carolina, South Puget Intertribal Planning Agency, Tennessee, and Washington, DC. Funding preference will be given to NCCCP Implementation applicants, including: Massachusetts, Northwest Portland Area Indian Health Board, Rhode Island, and Texas. Applicants listed above need not submit a new application to be considered for funding. Programs who previously applied and are not on this list, but are interested in being funded, must reapply. In addition, applicants who previously submitted a Planning application that was approved but unfunded, and now wish to be considered for Implementation, must submit a new application.

For component specific funding preference information, please refer to sections G, H, and I of the amended PA 02060.

Requested Budget Information

Applicants should submit separate budgets for each component (as well as separate budgets if applying for the Optional Funding under NCCCP) in response to this Open Season announcement. Each detailed budget and narrative justification should support the activities for the funding period specified in this Program Announcement for FY 2003 support.

Applications should follow the guidance provided under each program component in the amended PA 02060, with respect to the development and submission of an itemized budget and justification.

Use of Funds

For specific use of funds information, refer to sections G, H, and I of the amended PA 02060.

Cooperative agreement funds may be used to support personnel and to purchase equipment, supplies, and services directly related to project activities and consistent with the scope of the cooperative agreement.

Funds provided under this program announcement may not be used to:

- Conduct research projects. Guidance regarding CDC's definition of ''research'' should be reviewed at: *http://www.cdc.gov/od/ads/opspoll1.htm.*
- Supplant State or local funds, provide inpatient care or treatment, or support the construction or renovation of facilities.

Applicants are encouraged to identify and leverage mutually beneficial opportunities to interact and integrate with other State health department programs that address related chronic diseases or risk factors. This may include cost sharing to support a shared position such as a Chronic Disease Epidemiologist, Health Communication Specialist, Program Evaluator, or Policy Analyst to work on relevant activities across units/departments within the State health department. Such activities may include, but are not limited to, joint planning, joint funding of complementary activities, public health education, collaborative development and implementation of environmental, policy, systems, or community interventions and other cost sharing activities.

Recipient Financial Participation

For specific recipient financial participation information, please refer to sections G, H, and I of the amended PA 02060.

Direct Assistance

For specific Direct Assistance information, please refer to sections G, H, and I of the amended PA 02060.

Funding Consideration

For specific component funding consideration information, please refer to sections G, H, and I of the amended PA 02060.

D. Content

Letter of Intent

One Letter of Intent (LOI) is requested from each applicant applying for any component(s) of this program. The narrative should be no more than one single-spaced page, printed on one side, with one-inch margins, and unreduced font. Your LOI will not be evaluated, but will be used to assist CDC in planning for the objective review for this program and should include the announcement number, the specific component(s) and parts of the component, if applicable, for which funds are being applied, and the name of the principal investigator.

Application Development

Please refer to sections G, H, and I of the amended PA 02060 to use the information in the Program Requirements, Other Requirements, and Evaluation Criteria sections to develop the application content. Your application will be evaluated using the criteria listed, so it is important to follow them in laying out your application.

Applications should follow the guidance below with respect to page limitations for each component. All applications should be printed on one side, with one-inch margins, using unreduced font. All materials must be provided in an unbound, one-sided, 8 ½ by 11 inch print format, suitable for photocopying (*i.e.*, no audiovisual materials, posters, tapes, *etc.*)

Page Limitations

For specific page limitations information, please see sections G, H, and I of the amended PA 02060.

Application Outline

Applicants may apply for any or all of the components within this program announcement for which they are eligible. Please provide specific application outline information for each component as outlined in specific

sections G, H, and I of the amended PA 02060.

E. Submission and Deadline

Letter of Intent

On or before February 5, 2003, submit the LOI to the Grants Management Specialist identified in the ''Where to Obtain Additional Information'' section of this announcement.

Application

Submit the signed original and two copies of CDC Form 0.1246. Forms are available at the following Internet address: *www.cdc.gov/od/pgo/forminfo.htm.* If you do not have access to the Internet, or if you have difficulty accessing the forms on-line, you may contact the CDC Procurement and Grants Office Technical Information Management Section at: 770–488–2700. Application forms can be mailed to you.

The application must be received by 4 p.m. eastern time March 7, 2003. Submit the application to: Technical Information Management-PA02060–FY03, CDC Procurement and Grants Office, 2920 Brandywine Road, Room 3000, Atlanta, GA 30341–4146.

Applications may not be submitted electronically.

Please reference Program Announcement Number 02060–FY03 National Cancer Prevention and Control Program on the mailing envelope and on the application Standard Form 424, block 11. Please also make sure that block 16 on Standard Form 424 regarding Executive Order 12372 has been completed correctly.

Deadline

Letters of intent and applications shall be considered as meeting the deadline if they are received before 4 p.m. eastern time on the deadline date. Any applicant who sends their application by the United States Postal Service or commercial delivery services must ensure that the carrier will be able to guarantee delivery of the application by the closing date and time. If an application is received after closing due to (1) Carrier error, when the carrier accepted the package with a guarantee for delivery by the closing date and time, or (2) significant weather delays or natural disasters, CDC will upon receipt of proper documentation, consider the application as having been received by the deadline.

Any application that does not meet the above criteria will not be eligible for competition, and will be discarded. The applicant will be notified of their failure to meet the submission requirements.

F. Evaluation Criteria

Each application will be evaluated individually, through an objective review process.

For specific evaluation criteria information, please see sections G, H, and I of the amended PA 02060.

Where To Obtain Additional Information

This, and other CDC announcements can be found on the CDC home page, Internet address: *http://www.cdc.gov.*

Click on ''Funding'' then ''Grants and Cooperative Agreements.''

For general questions about this announcement, contact: Technical Information Management, CDC Procurement and Grants Office, 2920 Brandywine Road, Room 3000, Atlanta, GA 30341–4146. Telephone: 770–488–2441.

For business management and budget assistance, contact: Annie Camacho or Glynnis Taylor, Grants Management Specialist, CDC Procurement and Grants Office, 2920 Brandywine Road, Room 3000, Atlanta, GA 30341–4146.

Telephone: Annie Camacho: 770–488–2735. Glynnis Taylor: 70–488–2752.

E-mail address: Annie Camacho: *atc4@cdc.gov.* Glynnis Taylor: *gld1@cdc.gov.*

For business management and budget assistance in the territories, contact: Charlotte Flitcraft, Grants Management Officer, CDC Procurement and Grants Office, 2920 Brandywine Road, Room 3000, Atlanta, GA 30341–4146. Telephone: 770–488–2632. E-mail address: *caf5@cdc.gov.*

For program technical assistance contact:

NCCCP:

Leslie S. Given, M.P.A., Public Health Advisor, NCCCP, Program Services Branch, Division of Cancer Prevention and Control, National Center for Chronic Disease Prevention and Health Promotion, Centers for Disease Control and Prevention. 4770 Buford Hwy., NE. (MS K–57), Atlanta, GA 30341–3717. Telephone number: 770–488–3099. E-mail address: *llg5@cdc.gov.*

NBCCEDP:

Susan True, M.Ed., Branch Chief, Program Services Branch, Division of Cancer Prevention and Control, National Center for Chronic Disease Prevention and Health Promotion, Centers for Disease Control and Prevention, 4770 Buford Hwy., NE. (MS K–57), Atlanta, GA 30341–3717. Telephone number: 770–488–4880. E-mail address: *smt7@cdc.gov.*

NPCR:

Leah Simpson, M.B.A., Program Analyst, Cancer Surveillance Branch, Division of Cancer Prevention and Control, National Center for Chronic Disease Prevention and Health Promotion, Centers for Disease Control and Prevention, 4770 Buford Hwy., NE. (MS K–53), Atlanta, GA 30341–3717. Telephone number: 770–488–4158. E-mail address: *lds0@cdc.gov.*

Dated: January 13, 2003.

Sandra R. Manning,

CGFM, Director, Procurement and Grants Office, Centers for Disease Control and Prevention.

[FR Doc. 03–1192 Filed 1–17–03; 8:45 am]

BILLING CODE 4163–18–P

DEPARTMENT OF HEALTH AND HUMAN SERVICES

Food and Drug Administration

[Docket No. 02N–0309]

Agency Information Collection Activities; Announcement of OMB Approval; Reclassification Petitions for Medical Devices

AGENCY: Food and Drug Administration, HHS.

ACTION: Notice.

SUMMARY: The Food and Drug Administration (FDA) is announcing that a collection of information entitled ''Reclassification Petitions for Medical Devices'' has been approved by the Office of Management and Budget (OMB) under the Paperwork Reduction Act of 1995.

FOR FURTHER INFORMATION CONTACT: Peggy Robbins, Office of Information Resources Management (HFA–250), Food and Drug Administration, 5600 Fishers Lane, Rockville, MD 20857, 301–827–1223.

SUPPLEMENTARY INFORMATION: In the **Federal Register** of October 16, 2002 (67 FR 63932), the agency announced that the proposed information collection had been submitted to OMB for review and clearance under 44 U.S.C. 3507. An agency may not conduct or sponsor, and a person is not required to respond to, a collection of information unless it displays a currently valid OMB control number. OMB has now approved the information collection and has assigned OMB control number 0910–0138. The approval expires on January 31, 2006. A copy of the supporting statement for this information collection is available on the Internet at http://www.fda.gov/ohrms/dockets.

Dated: January 14, 2003.

Margaret M. Dotzel,

Assistant Commissioner for Policy.

[FR Doc. 03–1256 Filed 1–17–03; 8:45 am]

BILLING CODE 4160–01–S

DEPARTMENT OF HEALTH AND HUMAN SERVICES

Food and Drug Administration

[Docket No. 00N–1526]

Robert A. Fiddes; Debarment Order; Correction

AGENCY: Food and Drug Administration, HHS.

ACTION: Notice; correction.

SUMMARY: The Food and Drug Administration (FDA) is correcting a notice that appeared in the **Federal Register** of November 6, 2002 (67 FR 67628). The document announced the issuance of an order under the Federal Food, Drug, and Cosmetic Act debarring Dr. Robert A. Fiddes for 20 years from providing services in any capacity to a person that has an approved or pending drug product application. The document was published with an inadvertent error. This document corrects that error.

FOR FURTHER INFORMATION CONTACT: Joyce Strong, Office of Policy (HF–27), Food and Drug Administration, 5600 Fishers Lane, Rockville, MD 20857, 301–827–7010.

SUPPLEMENTARY INFORMATION: In FR Doc. 02–28256, appearing on page 67628 in the **Federal Register** of Wednesday, November 6, 2002, the following correction is made:

1. On page 67628, in the second column, under ''II. Findings and Order'', in the fourth and fifth lines, ''(21 CFR 5.99)'' is corrected to read ''(21 CFR 5.34)''.

Dated: January 14, 2003.

Margaret M. Dotzel,

Assistant Commissioner for Policy.

[FR Doc. 03–1255 Filed 1–17–03; 8:45 am]

BILLING CODE 4160–01–S

DEPARTMENT OF HEALTH AND HUMAN SERVICES

Food and Drug Administration

Vaccines and Related Biological Products Advisory Committee; Notice of Meeting

AGENCY: Food and Drug Administration, HHS.

ACTION: Notice.

This notice announces a forthcoming meeting of a public advisory committee of the Food and Drug Administration (FDA). At least one portion of the meeting will be closed to the public.

Name of Committee: Vaccines and Related Biological Products Advisory Committee.

General Function of the Committee: To provide advice and recommendations to the agency on FDA's regulatory issues.

Date and Time: The meeting will be held on February 20, 2003, from 8:30 a.m. to 4:30 p.m.

Location: Holiday Inn, 8120 Wisconsin Ave., Bethesda, MD.

Contact Person: Jody G. Sachs or Denise H. Royster, Center for Biologics Evaluation and Research (HFM–71), Food and Drug Administration, 1401 Rockville Pike, Rockville, MD 20852, 301–827–0314, or FDA Advisory Committee Information Line, 1–800–741–8138 (301–443–0572 in the Washington, DC area), code 12391. Please call the Information Line for up-to-date information on this meeting.

Agenda: The committee will review and discuss the selection of strains to be included in the influenza virus vaccine for the 2003–2004 season and the intramural research program of the Laboratory of Bacterial Polysaccharides, Office of Vaccines Research and Review.

Procedure: On February 20, 2003, from 8:30 a.m. to 3:20 p.m., the meeting is open to the public. Interested persons may present data, information, or views, orally or in writing, on issues pending before the committee. Written submissions may be made to the contact person by February 4, 2003. Oral presentations from the public will be scheduled between approximately 1 p.m. and 1:30 p.m. and 2:50 p.m. and 3:20 p.m. Time allotted for each presentation may be limited. Those desiring to make formal oral presentations should notify the contact person before February 4, 2003, and submit a brief statement of the general nature of the evidence or arguments they wish to present, the names and addresses of proposed participants, and an indication of the approximate time requested to make their presentation.

Closed Committee Deliberations: On February 20, 2003, from 3:20 p.m. to 4:30 p.m., the meeting will be closed to permit discussion where disclosure would constitute a clearly unwarranted invasion of personal privacy (5 U.S.C. 552b(c)(6)).

Persons attending FDA's advisory committee meetings are advised that the agency is not responsible for providing access to electrical outlets.

FDA welcomes the attendance of the public at its advisory committee meetings and will make every effort to accommodate persons with physical disabilities or special needs. If you require special accommodations due to a disability, please contact Jody G. Sachs or Denise H. Royster at least 7 days in advance of the meeting.

Notice of this meeting is given under the Federal Advisory Committee Act (5 U.S.C. app. 2).

Dated: January 10, 2003.

Linda Arey Skladany,

Associate Commissioner for External Relations.

[FR Doc. 03–1208 Filed 1–17–03; 8:45 am]

BILLING CODE 4160–01–S

DEPARTMENT OF HEALTH AND HUMAN SERVICES

Office of Inspector General; Program Exclusions: December 2002

AGENCY: Office of Inspector General, HHS.

ACTION: Notice of program exclusions.

During the month of December 2002, the HHS Office of Inspector General imposed exclusions in the cases set forth below. When an exclusions is imposed, no program payment is made to anyone for any items or services (other than an emergency item or service not provided in a hospital emergency room) furnished, ordered or prescribed by an excluded party under the Medicare, Medicaid, and all Federal Health Care programs. In addition, no program payment is made to any business or facility, *e.g.*, a hospital, that submits bills for payment for items or services provided by an excluded party. Program beneficiaries remain free to decide for themselves whether they will continue to use the services of an excluded party even though no program payments will be made for items and services provided by that excluded party. The exclusions have national effect and also apply to all Executive Branch procurement and non-procurement programs and activities.

Subject city, state	Effective date
PROGRAM-RELATED CONVICTIONS	
ALY, WAEL ..... CLIFTON, NJ	01/20/2003
BACO-CUEBAS, GERMAN A .. MAYAGUEZ, PR	01/20/2003
BERG, SHANNON GRIFFIN .... FLORENCE, SC	01/20/2003
BRIDGER, BARBARA LYNN ... PIERRE, SD	01/20/2003
CHRISTOPHERSON, PAUL K	01/20/2003

Subject city, state	Effective date
GREEN BAY, WI	
DAVIS, CHRISTOPHER PHILADELPHIA, PA	01/20/2003
DIAZ, MIGUEL NAPLES, FL	01/20/2003
DRAKE-LASSIE, MINERVA GROVE CITY, OH	01/20/2003
EIDMAN, STEVEN E ENGLEWOOD, NJ	01/20/2003
FARRAR, STACEY J BUFFALO, OH	01/20/2003
FIELDS, SANDRA KAYE SHREVEPORT, LA	01/20/2003
FROH, JOHN ROBERT EDEN PRAIRIE, MN	01/20/2003
GARCIA, LUISA F FT LAUDERDALE, FL	01/20/2003
GASTON, SHAUNDRA LANELL DALLAS, TX	01/20/2003
GLASSES MADE EAZY, INC PHILADELPHIA, PA	01/20/2003
GOLDEN OPTICAL, INC PHILADELPHIA, PA	01/20/2003
HAMMOND, HELEN HAWKINSVILLE, GA	01/20/2003
HERAVI, BEHROOZ BEVERLY HILLS, CA	01/20/2003
HERAVI, BEHZAD RESEDA, CA	01/20/2003
JIMENEZ, JOAQUIN JOSE LOS ANGELES, CA	01/20/2003
KEMPTON, JAMES E MEDIA, PA	01/20/2003
KNEPLER, JEFFREY BUTLER, WI	01/20/2003
LIPPTON, HOWARD YAZOO CITY, MS	01/20/2003
LIPSEY, PHILLIP C TERRE HAUTE, IN	01/20/2003
MARK GERRY PLUCER, D O, P C FLINT, MI	01/20/2003
MARTIN, SUSAN E NEWBERRY, SC	01/20/2003
PAGE, EVA H WOODBURY, MN	01/20/2003
PETERMAN, LANCE JEFFREY COLORADO SPRINGS, CO	01/20/2003
PETERSON, KAREN R PEORIA, AZ	01/20/2003
RAITHATHA, PRABJUDAS G LEXINGTON, KY	01/20/2003
RILES, CRAIG RAIFORD, FL	01/20/2003
RODRIGUEZ, LUIS J MIAMI, FL	01/20/2003
SANDLER, SCOTT CHICAGO, IL	10/31/2002
SANTA, FREDERICK J NORTHFORD, CT	01/20/2003
SELIM, HANAN CLIFTON, NJ	01/20/2003
SHAW, K GLENN MORRISON, CO	01/20/2003
STOLPEN, RODGER H SOMERS, CT	01/20/2003
STRACHAN, JOYCE ATLANTA, GA	01/20/2003
TAYLOR, JAMES E HARTLY, DE	01/20/2003
THURSTON, WILLIAM H S JORDAN, UT	01/20/2003
VEGA-DELGADO, MARISOL SAN JUAN, PR	01/20/2003
WEEKS, ROBIN RAE DAYTON, OH	01/20/2003
WESTBAY, CHAD LEE BOONVILLE, MO	01/20/2003
WILSON, BRENDA LOUISE TERRE HAUTE, IN	01/20/2003
YAMINI, ANWAR SR S HOLLAND, IL	01/20/2003
ZAPATERO, ADALBERTO TAFT, CA	01/20/2003
FELONY CONVICTION FOR HEALTH CARE FRAUD	
ANKROM, BRUCE EDWARD CALIPATRIA, CA	01/20/2003
HATFIELD, WILLIAM G CHARLOTTESVILLE, VA	01/20/2003
MASORTI, JONATHAN M STATE COLLEGE, PA	01/20/2003
MITCHELL, GREGORY WAYNE LAS VEGAS, NV	01/20/2003
PSAILA, BART R PITTSFORD, NY	01/20/2003
STACK, SOPHIA DAO ANAHEIM, CA	01/20/2003
FELONY CONTROL SUBSTANCE CONVICTION	
BEACH, JEFFREY A MOUNTAIN TOP, PA	01/20/2003
BLAND, BRENDA S CENTERVILLE, OH	01/20/2003
BRADY, RYAN KEITH W VALLEY CITY, UT	01/20/2003
DEBUS, LAURIE MARIE ALLIANCE, NE	01/20/2003
EULO, JANMARIE MORRISONVILLE, NY	01/20/2003
MILESKI, MARK KEVIN CARROLLTON, TX	01/20/2003
OSTROSKIE, JOAN NEW MILFORD, NJ	01/20/2003
ROMO, JOEY RUSSELL LITCHFIELD, AZ	01/20/2003
SLUSHER, STEPHEN LARKIN ESCANABA, MI	01/20/2003
VAUGHN, DALE RAY WARREN, OH	01/20/2003
PATIENT ABUSE/NEGLECT CONVICTIONS	
BEECHUM, JANICE ANN TACOMA, WA	01/20/2003
BERMISA, RAQUEL KAILULA, HI	01/20/2003
CARLSON, JACALYN GALE SAUK CENTRE, MN	01/20/2003
DEVEREAUX, NYLA L AURORA, CO	01/20/2003
FEUCHT, ROBERT CHARLES SAUK CENTRE, MN	01/20/2003
FREEMAN, JOHN MEMPHIS, TN	01/20/2003
FRENCH PRIEUR, REBA ANN LITTLE ROCK, AR	01/20/2003
GUICE, CARLA RENEE TALLULAH, LA	01/20/2003
HAYES, JANET GREEN BAY, WI	01/20/2003
JONES, DEKESHA MARIE OKLAHOMA CITY, OK	01/20/2003
LAMBERTH, ANGELA M MICHIE, TN	01/20/2003
LATCHFORD, DOROTHEA R LEWISTOWN, PA	01/20/2003
LATCHFORD, LLOYD E CAMP HILL, PA	01/20/2003
MCANALLY, BRYAN M FINKSBURG, MD	01/20/2003
MELCHOR, EDGAR LOS ANGELES, CA	01/20/2003
MOORE, MILDRED COLUMBUS, OH	01/20/2003
NEEDLES, JOHN DAVID CEDAR CITY, UT	01/20/2003
PLATNER, DONALD J FOX POINT, WI	01/20/2003
PRINCE, TIMOTHY D LAVERGNE, TN	01/20/2003
ROBERTS, ALYSSA BEMIDJI, MN	01/20/2003
SMITH, SANDRA J FT ATKINSON, WI	01/20/2003
TANYI, ANTONIA S LEONARD, MI	01/20/2003
TAYLOR, BEVERLY JEAN ST PAUL, MN	01/20/2003
WEST, TERRY D LUMBER CITY, GA	01/20/2003
WILLIAMS, MARGARET BRIDGEPORT, OH	01/20/2003
CONTROLLED SUBSTANCE CONVICTIONS	
HOBBS, REBECCA E RICHMOND, IN	01/20/2003
MAXON, MONICA ANN VESTABURG, PA	01/20/2003
LICENSE REVOCATION/SUSPENSION/ SURRENDERED	
ADAMS, EARL LEONARD MIRAMAR, FL	01/20/2003
ALI, SHIFFE HAAMID HIGHLAND PARK, IL	01/20/2003
ALLEN, ANGELA MARIE MATTAWAN, MI	01/20/2003
ANDERSON, MICHAEL COSTA MESA, CA	01/20/2003
ARMOR, ROSILYN C RIALTO, CA	01/20/2003
BEEBE, LINDA KAY MESQUITE, TX	01/20/2003
BELL, MARLO THOMAS TUSCALOOSA, AL	01/20/2003
BENKIN, RICHARD MOUNT PROSPECT, IL	01/20/2003
BLACKBURN, PETER M SPRINGFIELD, IL	01/20/2002
BLEDSOE, MARY D CHILLICOTHE, MO	01/20/2003
BOLLING, BEVERLY ANN CINCINNATI, OH	01/20/2003
BOURQUE, ANGELA W MONROE, LA	01/20/2003
BRACKEN, SUSAN A SANFORD, NC	01/20/2002
BREEDEN, CONNIE CRIMORA, VA	01/20/2003
BROWN, JAMES WAYNE SANGER, TX Page 6	01/20/2003
BROWN, JOYCE PEARL	01/20/2003

Subject city, state	Effective date
CHICAGO, IL	
BROWN, MARTHA PASCAGOULA, MS	01/20/2003
BURNS, LOIS ELAINE MINDEN, NV	01/20/2003
BUSTAMONTE, DARIO JR SANGER, CA	01/20/2003
CARBERRY, F JAMES QUEENSBURY, NY	01/20/2003
CARTER, KIM MICHELLE HIGHLAND, CA	01/20/2003
CARTRIGHT, JENNIFER A CARTHAGE, MO	01/20/2003
CHALFANT, JEAN P VALDESE, NC	01/20/2003
CHATMON, MAURICE MONROE, LA	01/20/2003
CHUPREVICH, EILEEN DOROTHY BUTLER, NJ	01/20/2003
COBBS, JOSEPH E SAN DIEGO, CA	01/20/2003
COLEMAN, SEAN DYLAN SAN JOSE, CA	01/20/2003
COLSON, BRIAN P PARKER, CO	01/20/2003
CREEKMORE, JAYNE TOPOCK, AZ	01/20/2003
CROCKER, CAROL J FARMINGTON, MO	01/20/2003
DE FRIEZ, CURTIS B CARSON CITY, NV	01/20/2003
DEROSIS, EDWARD LOUIS SAN RAFAEL, CA	01/20/2003
DRAKE, RANDALL SCOTT MT STERLING, KY	01/20/2003
DRESSEL, TAMMY A BALTIMORE, MD	01/20/2003
DRUMM, RANDY ELLIS LAPEER, MI	01/20/2003
EBERLING, KAREN STOBER JEFFERSONTOWN, KY	01/20/2003
ELLINGTON, JOSHUA THOMAS DANIE UKIAH, CA	01/20/2003
FAHEY, SANDRA L WOODBRIDGE, VA	01/20/2003
FERGUSON, DANIEL STEPHEN YUCAIPA, CA	01/20/2003
FERNANDES, PATRICIA A N ATTLEBORO, MA	01/20/2003
FLEMING, LINDA JEAN BATAVIA, IL	01/20/2003
FOREST, ANNIE MARGARETT DALLAS, TX	01/20/2003
GABION, CELIA ESTANO BREA, CA	01/20/2003
GALLEA, MICHELLE ANN HEMET, CA	01/20/2003
GANSON, NORMA R HAVANA, IL	01/20/2003
GARZA, MARGARET S CORPUS CHRISTI, TX	01/20/2003
GENDRON, SUSAN HURON, CA	01/20/2003
GILMORE, BARBARA A KANSAS CITY, MO	01/20/2003
GLATTER, DEBRA DEE SHELBY, NE	01/20/2003
GOSS, BARBARA CRAIG BIRMINGHAM, AL	01/20/2003
GRAY, SAMUEL H GLENDALE, AZ	01/20/2003
HACKER, DEBORAH JEAN AUSTIN, TX	01/20/2003
HALL, KAREN BAY ST LOUIS, MS	01/20/2003
HAMILTON, FRANK WAYNE TULSA, OK	01/20/2003
HARDMAN, CHARLENE RAE TOOELE, UT	01/20/2003
HARTMAN, JAMES ROBERT LAGUNA NIGUEL, CA	01/20/2003
HAWKINS, KIMBERLY AUSTIN, TX	01/20/2003
HEULER, WALTER KENNETH ORANGE, CA	01/20/2003
HIBLER, SLADE EVERETT SALADO, TX	01/20/2003
HILL, RONNETTA EUGENIA FONTANA, CA	01/20/2003
HODGE, KAREN LEE PLAINWELL, MI	01/20/2003
HOLLIS, VINCENT W III CARSON, CA	01/20/2003
HOOKER, NELEY ELEANOR LOS ANGELES, CA	01/20/2003
HUFFMAN, ROMMIE GREENSBORO, NC	01/20/2003
HUGHES, GAIL MARIE PASEDENA, TX	01/20/2003
JACKSON, GLORIA ANN ALEXANDER CITY, AL	01/20/2003
JAMES, TAMMIE LYNN BATON ROUGE, LA	01/20/2003
JAZAYERI, ROBERT IRVINE, CA	01/20/2003
JOHNSON, SUSAN GAIL WILLIAMSBURG, OH	01/20/2003
JOHNSON, BRENDA CAROLINE WILLIAMSTOWN, NJ	01/20/2003
JOHNSON, TERESA A BELLEVILLE, IL	01/20/2003
JOHNSON, JODY C VERNAL, UT	01/20/2003
JONES, AMY JO WINAMAC, IN	01/20/2003
JONES, CATHERINE LAUREL, MS	01/20/2003
KAMINSKY, TAMARA FRANCINE LAKE FORREST, CA	01/20/2003
KEETON, KELLY BOONEVILLE, MS	01/20/2003
KONOPA, TERRI L WINCHESTER, VA	01/20/2003
KUNKEL, PATRICIA ELOIS AMARILLO, TX	01/20/2003
LAIR, MATTHEW BYRON WHITNEY, TX	01/20/2003
LANDREMAN, JAMES R ROSENDALE, WI	01/20/2003
LAYNE, HERMETTA PAUL KILLEEN, TX	01/20/2003
LEE, JEONG PYO CORONA, CA	01/20/2003
LIEBERMAN, FRED L LOS ANGELES, CA	01/20/2003
LUTHER, WANDA SUE ELIZABETH, IN	01/20/2003
MACK, TIMOTHY W CLINTON, MA	01/20/2003
MADDOX, PATRICIA E GRIMES FLORALA, AL	01/20/2003
MASSEY, MELISSA A PHOENIX, AZ	01/20/2003
MAYNARD, JERRY O WOODBURY, TN	01/20/2003
MAYS, GAIL A MIDLOTHIAN, VA	01/20/2003
MCCARLEY, DOUGLAS SCOTT GRAND PRAIRIE, TX	01/20/2003
MCCONNELL, SHERRY ASHVILLE, NC	01/20/2003
MCCONNELL, DOUGLAS D NOGALES, AZ	01/20/2003
MCGEE, MICHAEL KEVIN SAN DIEGO, CA	01/20/2003
MCINTYRE, MARLENE MARY MILAN, IL	01/20/2003
MCMAHON, DARREL JAMES TWIN FALLS, ID	01/20/2003
MCMURTREY, ALICE ELIZABETH N PLATTE, NE	01/20/2003
MENDELL, PHYLLIS MALKA HUNTINGTON, NY	01/20/2003
METLER, JAMES R SHELBYVILLE, TN	01/20/2003
METZ, JAN E NAPERVILLE, IL	01/20/2003
MILLER, ANTHONY LAWRENCE TUCSON, AZ	01/20/2003
MOREAU, BLAKE ALLEN NEDERLAND, TX	01/20/2003
MORLAND, JULIE ANN GALVA, IL	01/20/2003
MURRY-STUBER, KATHRYN L AURORA, CO	01/20/2003
NASS, MARK D ROCKFORD, IL	01/20/2003
NICHOLAS, HUNTER ADRIAN BISMARCK, ND	01/20/2003
NICHOLSON, YVONNE ANNETTE PEORIA, AZ	01/20/2003
NIEMAN, KIMBERLEY L LAKEWOOD, CO	01/20/2003
O'HAIR, RICHARD KARL HERRIN, IL	01/20/2003
O'SHEA, SUSAN GALE SAN DIEGO, CA	01/20/2003
OHLENFROST, JAMES W INDIAN TRAIL, NC	01/20/2003
OLIVE, OZIE L SAN BERNADINO, CA	01/20/2003
OLIVER, JOANETTA JOHNSON ENSLEY, AL	01/20/2003
OWENS, RONALD MEBANE, NC	01/20/2003
PADRON, CARMEN EMPORIA, KS	01/20/2003
PALACIO, DOROTHY ELIZABETH YUCAIPA, CA	01/20/2003
PEARSON, JULIE ANN GREENCASLTE, IN	01/20/2003
PENNINGTON, BECKY A TERRELL, TX	01/20/2003
PETERJOHN, BRIAN D CHARLOTTE, NC	01/20/2003
PETERSON, DEBORAH D	01/20/2003

Subject city, state	Effective date
STURGIS, SD	
PLYMALE, ROBERT DARWIN SALT LAKE CITY, UT	01/20/2003
POCKNETT, DWAYNE ANTHONY LOS ANGELES, CA	01/20/2003
RAMIREZ, MARIA HALLEX LAKE ARROWHEAD, CA	01/20/2003
RAY, SUZANNA CAROL BERKELEY, CA	01/20/2002
REID, DONITA K ROBINSON SEVIERVILLE, TN	01/20/2003
REYES, ROMONA RICHNOND HILL, GA	01/20/2003
RICHARDS, TERRI ROXIANNE MOSS POINT, MS	01/20/2003
RIVERS, DAWN M MARION, IL	01/20/2003
ROBERTSON, YVONNE N KNOXVILLE, TN	01/20/2003
ROHS, ELIZABETH HAWKINS NORRISTOWN, PA	01/20/2003
RUGGIERO, ROSHELL L CONCORD, MA	01/20/2003
RUSS, STEVEN D NEVADA, MO	01/20/2003
SABOURIN, PETER J E PROVIDENCE, RI	01/20/2003
SCHMELTER, LYNN A VERNON, CT	01/20/2003
SCHRADER, ANGELA STAFFORDSVILLE, VA	01/20/2003
SEBURA, MICHAEL S LARGO, FL	01/20/2003
SHERMAN, SUSAN ANNE TROY, NY	01/20/2003
SHOUP, MARGARET BRANDON, MS	01/20/2003
SHUDICK, MARY D CHESTERTON, IN	01/20/2003
SLATER, ROBIN ALANE GRAYSLAKE, IL	01/20/2003
SMALL, DULCIE CLIFFORD HOUSTON, TX	01/20/2003
SMITH, MARY MARGARET ALEXANDER, IL	01/20/2003
SMITH, YUBIRY ANN W PALM BEACH, FL	01/20/2003
SMITH, SUSAN MARGARET PHOENIX, AZ	01/20/2003
SMOOT, JOHN MEDLEY BATESVILLE, MS	01/20/2003
SPROULE, TERESA LYNN TOOELE, UT	01/20/2003
STANLEY, PATRICIA ANN MANSFIELD, TX	01/20/2003
STANLEY, JUANITA L MESA, AZ	01/20/2003
STILPHEN-CAREY, RAINE R BELCHERTOWN, MA	01/20/2003
STONE, COREY GEORGE SALT LAKE CITY, UT	01/20/2003
SUNDQUIST, MARSHA ANN CHANDLER, AZ	01/20/2003
TANNER, LUANN OMAHA, NE	01/20/2003
TAYLOR, JANICE LYNN CASE GRANDE, AZ	01/20/2003
TAYLOR, LANNY CORINTH, MS	01/20/2003
THOMPSON, DENNIS RAY ALEXANDRIA, IN	01/20/2002
THRASHER, RENEE COLLEEN DECATUR, TX	01/20/2003
TRIPP, KENNETH R KNIGHTDALE, NC	01/20/2003
VALDEZ, LINDA NAVARRO SAN ANTONIO, TX	01/20/2003
VANDAL, LEO P JR MATTAPOISETT, MA	01/20/2003
VISKOCIL, SUSAN KATHLEEN MODESTO, CA	01/20/2003
WALLACE, JENELLEN L PHOENIX, AZ	01/20/2003
WEBB, ROBERTA SHOW LOW, AZ	01/20/2003
WHITT, PATSY WESSON, MS	01/20/2003
WILLIAMS, DEBRA MARIE MARIETTA, OH	01/20/2003
WOOD, DONNA L FOREST, MS	01/20/2003
YOUNG, BRIAN WESLEY CINCINNATI, OH	01/20/2003
YOUSSEF,OMAR A HYDEN, KY	01/20/2003
FEDERAL/STATE EXCLUSION/SUSPENSION	
HAMRICK-BURWELL, LIANE ELLSWORTH, ME	01/20/2003
WALKER, BARBARA E ORANGE, NJ	01/20/2003
OWNED/CONTROLLED BY CONVICTED ENTITIES	
AMERICAN INSTITUTE OF PLASTIC FT LAUDERDALE, FL	01/20/2003
GUADALUPE MULTI SPECIALTY FAMI LOS ANGELES, CA	01/20/2003
INSTITUTE FOR COSMETIC SURGERY FT LAUDERDALE, FL	01/20/2003
NORTHTOWN CHIROPRACTIC CLINIC SPOKANE, WA	01/20/2003
STOCKTON CHIROPRACTIC CTR STOCKTON, CA	01/20/2003
DEFAULT ON HEAL LOAN	
CHEEK, DAVID L DALLAS, TX	01/20/2003
CLARK, GARY C R TRAVELERS REST, SC	01/20/2003
CLEMENTS, DAVID DALE DALLAS, TX	11/07/2002
GREENE, SILAS R MEXICO BEACH, FL	11/07/2002
RICO, DAVID MAKAWAO, HI	11/07/2002
WEISSE, CARL E PHILADELPHIA, PA	12/10/2002

Dated: January 3, 2003.

Katherine B. Petrowski,

Director, Health Care Administrative Sanctions, Office of Inspector General.

[FR Doc. 03–1141 Filed 1–17–03; 8:45 am]

BILLING CODE 4150–04–P

DEPARTMENT OF HEALTH AND HUMAN SERVICES

National Institutes of Health

National Cancer Institute; Notice of Closed Meeting

Pursuant to section 10(d) of the Federal Advisory Committee Act, as amended (5 U.S.C. Appendix 2), notice is hereby given of the following meeting.

The meeting will be closed to the public in accordance with the provisions set forth in sections 552b(c)(4) and 552b(c)(6), Title 5 U.S.C., as amended. The grant applications and the discussions could disclose confidential trade secrets or commercial property such as patentable material, and personal information concerning individuals associated with the grant applications, the disclosure of which would constitute a clearly unwarranted invasion of personal privacy.

Name of Committee: National Cancer Institute Special Emphasis Panel, Centers for Excellence in Cancer Communications Research.

Date: February 26–28, 2003.

Time: 8 a.m. to 5 p.m.

Agenda: To review and evaluate grant applications.

Place: Bethesda Marriott, 5151 Pooks Hill Road, Bethesda, MD 20814.

Contact Person: Timothy C. Meeker, MD, Scientific Review Administration, Special Referral and Resources Branch, Division of Extramural Activities, National Cancer Institute, 6116 Executive Boulevard, Room 8088, Rockville, MD 20852, 301/594–1279.

(Catalogue of Federal Domestic Assistance Program Nos. 93.392, Cancer Construction; 93.393, Cancer Cause and Prevention Research; 93.394, Cancer Detection and Diagnosis Research; 93.395, Cancer Treatment Research; 93.396, Cancer Biology Research; 93.397, Cancer Centers Support; 93.398, Cancer Research Manpower; 93.399, Cancer Control, National Institutes of Health, HHS)

Dated: January 10, 2003.

Anna P. Snouffer,

Acting Director, Office of Federal Advisory Committee Policy.

[FR Doc. 03–1245 Filed 1–17–03; 8:45 am]

BILLING CODE 4140–01–M

DEPARTMENT OF HEALTH AND HUMAN SERVICES

National Institutes of Health

National Cancer Institute; Notice of Closed Meeting

Pursuant to section 10(d) of the Federal Advisory Committee Act, as amended (5 U.S.C. Appendix 2), notice is hereby given of the following meeting.

The meeting will be closed to the public in accordance with the provisions set forth in sections 552b(c)(4) and 552b(c)(6), Title 5 U.S.C., as amended. The grant applications and the discussions could disclose confidential trade secrets or commercial properly such as patentable material, and personal information concerning individuals associated with the grant applications, the disclosure of which would constitute a clearly unwarranted invasion of personal privacy.

Name of Committee: National Cancer Institute Special Emphasis Panel, Human Factors in Breast Cancer Detection and Diagnosis.

Date: February 10, 2003.

Time: 1 p.m. to 5 p.m.

Agenda: to review and evaluate grant applications.

Place: National Institutes of Health, 6116 Executive Boulevard, Bethesda, MD 20892, (Telephone Conference Call).

Contact Person: William D. Merritt, PhD, Scientific Review Administrator, Grants Review Branch, National Cancer Institute, National Institutes of Health, 6116 Executive Boulevard, Room 8034, MSC 8328, Bethesda, MD 20892–8328, 301–496–9767.

(Catalogue of Federal Domestic Assistance Program Nos. 93.392, Cancer Construction; 93.393, Cancer Cause and Prevention Research; 93.394, Cancer Detection and Diagnosis Research; 93.395, Cancer Treatment Research; 93.396, Cancer Biology Research; 93.397, Cancer Centers Support; 93.398, Cancer Research Manpower; 93.399, Cancer Control, National Institutes of Health, HHS)

Dated: January 10, 2003.

Anna P. Snouffer,

Acting Director, Office of Federal Advisory Committee Policy.

[FR Doc. 03–1243 Filed 1–17–03; 8:45 am]

BILLING CODE 4140–01–M

DEPARTMENT OF HEALTH AND HUMAN SERVICES

National Institutes of Health

National Cancer Institute; Notice of Closed Meeting

Pursuant to section 10(d) of the Federal Advisory Committee Act, as amended (5 U.S.C. Appendix 2), notice is hereby given of the following meeting.

The meeting will be closed to the public in accordance with the provisions set forth in sections 552b(c)(4) and 552b(c)(6), Title 5 U.S.C., as amended. The contract proposals and the discussions could disclose confidential trade secrets or commercial property such as patentable material, and personal information concerning individuals associated with the contract proposals, the disclosure of which would constitute a clearly unwarranted invasion of personal privacy.

Name of Committee: National Cancer Institute Special Emphasis Panel, Fundamental Technologies for the Development of Biomolecular Sensors.

Date: February 3, 2003.

Time: 9 a.m. to 7 p.m.

Agenda: To review and evaluate contract proposals.

Place: National Institutes of Health, 6130 Executive Blvd., Rockville, MD 20852.

Contact Person: Sherwood Githens, PhD, Scientific Review Administrator, National Institutes of Health, National Cancer Institute, Special Review, Referral and Resources Branch, 6116 Executive Boulevard, Room 8068, Bethesda, MD 20892, (301) 435–1822.

(Catalogue of Federal Domestic Assistance Program Nos. 93.392, Cancer Construction; 93.393, Cancer Cause and Prevention Research; 93.394, Cancer Detection and Diagnosis Research; 93.395, Cancer Treatment Research; 93.396, Cancer Biology Research; 93.397, Cancer Centers Support; 93.398, Cancer Research Manpower; 93.399, Cancer Control, National Institutes of Health, HHS)

Dated: January 10, 2003.

Anna P. Snouffer,

Acting Director, Office of Federal Advisory Committee Policy.

[FR Doc. 03–1244 Filed 1–17–03; 8:45 am]

BILLING CODE 4140–01–M

DEPARTMENT OF HEALTH AND HUMAN SERVICES

National Institutes of Health

National Institute on Drug Abuse; Notice of Meeting

Pursuant to section 10(d) of the Federal Advisory Committee Act, as amended (5 U.S.C. Appendix 2), notice is hereby given of a meeting of the National Advisory Council on Drug Abuse.

The meeting will be open to the public as indicated below, with attendance limited to space available. individuals who plan to attend and need special assistance, such as sign language interpretation or other reasonable accommodations, should notify the Contact Person listed below in advance of the meeting.

The meeting will be closed to the public in accordance with the provisions set forth in section 552b(c)(6), Title 5 U.S.C., as amended. The grant applications and the discussions could disclose confidential trade secrets or commercial property such as patentable material, and personal information concerning individuals associated with the grant applications, the disclosure of which would constitute a clearly unwarranted invasion of personal privacy.

Name of Committee: National Advisory Council on Drug Abuse.

Date: February 12–13, 2003.

Closed: February 12, 2003, 1 p.m. to 3:30 p.m.

Agenda: To review and evaluate grant applications.

Place: National Institutes of Health, Neuroscience Center, 6001 Executive Boulevard, Rockville, MD 20852.

Open: February 13, 2003, 9 a.m. to 4 p.m.

Agenda: This portion of the meeting will be open to the public for announcements and reports of administrative, legislative and program developments in the drug abuse field.

Place: National Institutes of Health (NIH), Neuroscience Center, 6001 Executive Boulevard, Rockville, MD 20852.

Contact Person: Teresa Levitin, PhD, Director, Office of Extramural Affairs, National Institute on Drug Abuse, National Institutes of Health, DHHS, Bethesda, MD 20892–9547, (301) 443–2755.

Information is also available on the Institute's/Center's home page: *www.drugabuse.gov/NACDA/NACDAHome.html,* where an agenda and any additional information for the meeting will be posted when available.

(Catalogue of Federal Domestic Assistance Program Nos. 93.277, Drug Abuse Scientist Development Award for Clinicians, Scientist Development Awards, and Research Scientist Awards; 93.278, Drug Abuse National Research Service Awards for Research Training; 93.279, Drug Abuse Research Programs, National Institutes of Health, HHS)

Dated: January 10, 2003.

Anna P. Snouffer,

Acting Director, Office of Federal Advisory Committee Policy.

[FR Doc. 03–1246 Filed 1–17–03; 8:45 am]

BILLING CODE 4140–01–M

DEPARTMENT OF HEALTH AND HUMAN SERVICES

National Institutes of Health

National Institute on Drug Abuse; Notice of Closed Meeting

Pursuant to section 10(d) of the Federal Advisory Committee Act, as amended (5 U.S.C. Appendix 2), notice

is hereby given of the following meeting.

The meeting will be closed to the public in accordance with the provisions set forth in sections 552b(c)(4) and 552b(c)(6), Title 5 U.S.C., as amended. The contract proposals and the discussions could disclose confidential trade secrets or commercial property such as patentable material, and personal information concerning individuals associated with the contract proposals, the disclosure of which would constitute a clearly unwarranted invasion of personal privacy.

Name of Committee: National Institute on Drug Abuse Special Emphasis Panel, ''Development of Science Education Materials Related to the Use of Animals.''

Date: January 29, 2003.

Time: 1:30 p.m. to 3:30 p.m.

Agenda: To review and evaluate contract proposals.

Place: National Institutes of Health, Neuroscience Center, 6001 Executive Boulevard, Rockville, MD 20852, (Telephone Conference Call).

Contact Person: Eric Zatman, Contract Review Specialist, Office of Extramural Affairs, National Institute on Drug Abuse, National Institutes of Health, DHHS, 6001 Executive Boulevard, Room 3158, MSC 9547, Bethesda, MD 20892–9547, (301) 435–1438.

This notice is being published less than 15 days prior to the meeting due to the timing limitations imposed by the review and funding cycle.

(Catalogue of Federal Domestic Assistance Program Nos. 93.277, Drug Abuse Scientist Development Award for Clinicians, Scientist Development Awards, and Research Scientist Awards; 93.278, Drug Abuse National Research Service Awards for Research Training; 93.279, Drug Abuse Research Programs, National Institutes of Health, HHS)

Dated: January 10, 2003.

Anna P. Snouffer,

Acting Director, Office of Federal Advisory Committee Policy.

[FR Doc. 03–1247 Filed 1–17–03; 8:45 am]

BILLING CODE 4140–01–M

DEPARTMENT OF HEALTH AND HUMAN SERVICES

National Institutes of Health

National Institute on Deafness and Other Communication Disorders; Notice of Closed Meeting

Pursuant to section 10(d) of the Federal Advisory Committee Act, as amended (5 U.S.C. Appendix 2), notice is hereby given of the following meeting.

The meeting will be closed to the public in accordance with the provisions set forth in sections 552b(c)(4) and 552b(c)(6), Title 5 U.S.C., as amended. The grant applications and the discussions could disclose confidential trade secrets or commercial property such as patentable material, and personal information concerning individuals associated with the grant applications, the disclosure of which would constitute a clearly unwarranted invasion of personal privacy.

Name of Committee: Communication Disorders Review Committee.

Date: February 19–20, 2003.

Time: 8 am to 5 pm.

Agenda: To review and evaluate grant applications.

Place: Wyndham Washington, 1400 M Street, NW., Washington, DC 20005.

Contact Person: Melissa J. Stick, PhD, MPH, Scientific Review Administrator, Scientific Review Branch, Division of Extramural Research, NIDCD/NIH, 6120 Executive Blvd., Bethesda, MD 20892, 301–496–8683.

(Catalogue of Federal Domestic Assistance Program Nos. 93.173, Biological Research Related to Deafness and Communicative Disorders, National Institutes of Health, HHS)

Dated: January 10, 2003.

Anna P. Snouffer,

Acting Director, Office of Federal Advisory Committee Policy.

[FR Doc. 03–1248 Filed 1–17–03; 8:45 am]

BILLING CODE 4140–01–M

DEPARTMENT OF HEALTH AND HUMAN SERVICES

National Institutes of Health

National Institute of Neurological Disorders and Stroke; Notice of Closed Meeting

Pursuant to section 10(d) of the Federal Advisory Committee Act, as amended (5 U.S.C. Appendix 2), notice is hereby given of the following meeting.

The meeting will be closed to the public in accordance with the provisions set forth in sections 552b(c)(4) and 552b(c)(6), Title 5 U.S.C., as amended. The grant applications and the discussions could disclose confidential trade secrets or commercial property such as patentable material, and personal information concerning individuals associated with the grant applications, the disclosure of which would constitute a clearly unwarranted invasion of personal privacy.

Name of Committee: National Institute of Neurological Disorders and Stroke Special Emphasis Panel Stroke Prevention/Intervention Research Program.

Date: January 20–21, 2003.

Time: 7:30 p.m. to 5 p.m.

Agenda: To review and evaluate grant applications.

Place: Sheraton Buckhead Hotel, 3405 Lenox Road, NE., Atlanta, GA 30326.

Contact Person: Katherine Woodbury, PhD, Scientific Review Administrator, Scientific Review Branch, NINDS/NIH/DHHS, Neuroscience Center, 6001 Executive Blvd, Suite 3208, MSC 9529, Bethesda, MD 20892–9529, 301–496–9223.

This notice is being published less than 15 days prior to the meeting due to the timing limitations imposed by the review and funding cycle.

(Catalogue of Federal Domestic Assistance Program Nos. 93.853, Clinical Research Related to Neurological Disorders; 93.854, Biological Basis Research in the Neurosciences, National Institutes of Health, HHS)

Dated: January 10, 2003.

Anna P. Snouffer,

Acting Director, Office of Federal Advisory Committee Policy.

[FR Doc. 03–1249 Filed 1–17–03; 8:45 am]

BILLING CODE 4140–01–M

DEPARTMENT OF HEALTH AND HUMAN SERVICES

National Institutes of Health

List of Drugs for Which Pediatric Studies Are Needed

ACTION: Notice.

SUMMARY: The National Institutes of Health (NIH) is providing notice of a ''List of Drugs for Which Pediatric Studies Are Needed.'' The NIH developed the list in consultation with the Food and Drug Administration (FDA) and pediatric experts, as mandated by the Best Pharmaceuticals for Children Act (BPCA). This list prioritizes certain drugs most in need of study for use by children to ensure their safety and efficacy. The NIH will update the list annually until the Act expires on October 1, 2007.

DATES: The list is effective upon publication.

FOR FURTHER INFORMATION CONTACT: Dr. Donald Mattison, National Institute of Child Health and Human Development, 6100 Executive Boulevard, Room 4B–100, Rockville, MD 20892, e-mail <*BestPharmaceuticals@mail.nih.gov*>, telephone 301–496–5097 (not a toll-free number).

SUPPLEMENTARY INFORMATION: The NIH is providing notice of a ''List of Drugs for Which Pediatric Studies Are Needed'', as authorized under Section 3, Pub. L. 107–109 (42 U.S.C. 409I). On January 4, 2002, President Bush signed into law the Best Pharmaceuticals for Children Act (BPCA). The BPCA mandates that not later than one year after the date of enactment, the NIH in

consultation with the FDA and experts in pediatric research shall develop prioritize, and publish an annual list of certain approved drugs for which pediatric studies are needed. For inclusion on the list, an approved drug must meet the following criteria: (1) There is an approved application under section 505(j) of the Federal Food, Drug, and Cosmetic Act (21 U.S.C. 355(j)); (2) there is a submitted application that could be approved under the criteria of section 505(j) of the Federal Food, Drug, and Cosmetic Act; (3) there is no patent protection or market exclusivity protection under the Federal Food, Drug, and Cosmetic Act; or (4) there is a referral for inclusion on the list under section 505A(d)(4)(c); and additional studies are needed to assess the safety and effectiveness of the use of the drug in the pediatric population.

The BPCA further stipulates that in developing and prioritizing the list, the NIH shall consider, for each drug on the list: (1) The availability of information concerning the safe and effective use of the drug in the pediatric population; (2) whether additional information is needed; (3) whether new pediatric studies concerning the drug may produce health benefits in the pediatric population; and (4) whether reformulation of the drug is necessary.

In developing this initial list, the NIH consulted with the FDA, the American Academy of Pediatrics, the United States Pharmacopoeia and other experts in pediatric research. A preliminary list of off-patent drugs was drafted and categorized as a function of indication and use. The drugs were than prioritized based on frequency of use in the pediatric population, severity of the condition being treated, and potential for providing a health benefit in the pediatric population.

Following is the list of drugs for which pediatric studies are most urgently needed:

Azithromycin
Baclofen
Bumetanide
Dobutamine
Dopamine
Furosemide
Heparin
Lithium
Lorazepam
Rifampin
Sodium Nitroprusside
Spironolactone

Dated: January 9, 2003.

Ruth L. Kirschstein,

Deputy Director, NIH.

[FR Doc. 03–1250 Filed 1–17–03; 8:45 am]

BILLING CODE 4140–01–M

DEPARTMENT OF HOUSING AND URBAN DEVELOPMENT

[Docket No. FR–4820–N–02]

Notice of Proposed Information Collection: Comment Request; Builder's Certification of Plans, Specifications, and Site

AGENCY: Office of the Assistant Secretary for Housing-Federal Housing Commissioner, HUD.

ACTION: Notice.

SUMMARY: The proposed information collection requirement described below will be submitted to the Office of Management and Budget (OMB) for review, as required by the Paperwork Reduction Act. The Department is soliciting public comments on the subject proposal.

DATES: *Comments Due Date:* March 24, 2003.

ADDRESSES: Interested persons are invited to submit comments regarding this proposal. Comments should refer to the proposed by name and/or OMB Control Number and should be sent to: Wayne Eddins, Reports Management Officer, Department of Housing and Urban Development, 451 7th Street, SW, L'Enfant Plaza Building, Room 8003, Washington, DC 20410 or *Wayne_Eddins@hud.gov*.

FOR FURTHER INFORMATION CONTACT: Vance Morris, Director, Office of Single Family Program Development, Department of Housing and Urban Development, 451 7th Street SW, Washington, DC 20410, telephone (202) 708–2121 (this is not a toll free number) for copies of the proposed forms and other available information.

SUPPLEMENTARY INFORMATION: The Department is submitting the proposed information collection to OMB for review, as required by the Paperwork Reduction Act of 1995 (44 U.S.C. chapter 35, as amended).

This Notice is soliciting comments from members of the public and affected agencies concerning the proposed collection of information to: (1) Evaluate whether the proposed collection is necessary for the proper performance of the functions of the agency, including whether the information will have practical utility; (2) Evaluate the accuracy of the agency's estimate of the burden of the proposed collection of information; (3) Enhance the quality, utility, and clarity of the information to be collected; and (4) Minimize the burden of the collection of information on those who are to respond; including the use of appropriate automated collection techniques or other forms of information technology, e.g., permitting electronic submission of responses.

This Notice also list the following information:

Title of Proposal: Builder's Certification of Plans, Specifications, and Site.

OMB Control Number, if applicable: 2502–0496.

Description of the need for the information and proposed use: HUD requires the builder to complete the certification (form HUD–92541) noting adverse site/location factor(s) of the property, including Floodplains. This certification is necessary so that HUD does not insure a mortgage on property that poses a risk to health or safety of the occupant.

Agency form numbers, if applicable: HUD–92541.

Estimation of the total numbers of hours needed to prepare the information collection including number of respondents, frequency of response, and hours of response: The estimated total number of hours needed to prepare the information collection is 16,400; the number of respondents is approximately 800 generating approximately 65,600 annual responses; the frequency of response is on occasion; and the estimated time needed to prepare the response varies from 5 minutes to 10 minutes.

Status of the proposed information collection: Extension of a currently approved collection.

Authority: The paperwork Reduction Act of 1995, 44 U.S.C. chapter 35, as amended.

Dated: January 13, 2003.

John C. Weicher,

Assistant Secretary for Housing-Federal Housing Commissioner.

[FR Doc. 03–1223 Filed 1–17–03; 8:45 am]

BILLING CODE 4210–27–M

DEPARTMENT OF HOUSING AND URBAN DEVELOPMENT

[Docket No. FR–4728–N–02]

Notice of Certain Operating Cost Adjustment Factors for Fiscal Year 2003

AGENCY: Office of the Secretary, HUD.

ACTION: Publication of the 2003 Operating Cost Adjustment Factors (OCAFs) for Section 8 rent adjustments at contract renewal under section 524 of the Multifamily Assisted Housing Reform and Affordability Act of 1997 (MAHRA), as amended by the Preserving Affordable Housing for Senior Citizens and Families into the 21st Century Act of 1999, and under the Low-Income Housing Preservation and

Resident Homeownership Act of 1990 (LIHPRHA) Projects assisted with Section 8 Housing Assistance Payments.

SUMMARY: This notice establishes annual factors used in calculating rent adjustments under section 524 of the Multifamily Assisted Housing Reform and Affordability Act of 1997 (MAHRA) as amended by the Preserving Affordable Housing for Senior Citizens and Families into the 21st Century Act of 1999, and under the Low-Income Housing Preservation and Resident Homeownership Act of 1990 (LIHPRHA).

EFFECTIVE DATE: February 11, 2003.

FOR FURTHER INFORMATION CONTACT: Regina Aleksiewicz, Housing Project Manager, Office of Housing Assistance and Grant Administration, Department of Housing and Urban Development, Office of Multifamily Housing, 451 Seventh Street, SW., Washington, DC 20410; telephone (202) 708–3000; extension 2600 (This is not a toll-free number). Hearing- or speech-impaired individuals may access this number via TTY by calling the toll-free Federal Information Relay Service at 1–800–877–8339.

SUPPLEMENTARY INFORMATION:

I. Operating Cost Adjustment Factors (OCAFs)

Section 514(e)(2) of the FY 1998 HUD Appropriations Act, requires HUD to establish guidelines for rent adjustments based on OCAF. The legislation requiring HUD to establish OCAFs for LIHPRHA projects and projects with contract renewals under section 524 of MAHRA is similar in wording and intent. HUD has therefore developed a single factor to be applied uniformly to all projects utilizing OCAFs as the method by which rents are adjusted.

Additionally, section 524 of the Act gives HUD broad discretion in setting OCAFs—referring simply to ''operating cost factors established by the Secretary.'' The sole exception to this grant of authority is a specific requirement that application of an OCAF shall not result in a negative rent adjustment. OCAFs are to be applied uniformly to all projects utilizing OCAFs as the method by which rents are adjusted upon expiration of the term of the contract. OCAFs are applied to project contract rent less debt service.

An analysis of cost data for FHA-insured projects showed that their operating expenses could be grouped into nine categories: wages, employee benefits, property taxes, insurance, supplies and equipment, fuel oil, electricity, natural gas, and water and sewer. Based on an analysis of these data, HUD derived estimates of the percentage of routine operating costs that were attributable to each of these nine expense categories. Data for projects with unusually high or low expenses due to unusual circumstances were deleted from analysis.

States are the lowest level of geographical aggregation at which there are enough projects to permit statistical analysis. Additionally, no data were available for the Western Pacific Islands. Data for Hawaii was therefore used to generate OCAFs for these areas.

The best current measures of cost changes for the nine cost categories were selected. The only categories for which current data are available at the state level are for fuel oil, electricity, and natural gas. Current price change indices for the other six categories are only available at the national level. The Department had the choice of using dated state-level data or relatively current national data. It opted to use national data rather than data that would be two or more years older (*e.g.*, the most current local wage data are for 1996). The data sources for the nine cost indicators selected were as follows:

Labor Costs—6/01 to 6/02 Bureau of Labor Statistics (BLS), ''Employment Cost Index, Private Sector Wages and Salaries Component at the National Level.''

Employment Benefit Costs—6/01 to 6/02 Bureau of Labor Statistics (BLS) Employment Cost Index, Employee Benefits at the National Level.

Property Taxes—6/01 to 6/02 BLS Consumer Price Index, All Items Index.

Goods, Supplies, Equipment—6/01 to 6/02 BLS Producer Price Index, Finished Goods Less Food and Energy.

Insurance—6/01 to 6/02 BLS Consumer Price Index, Tenant and Household Residential Insurance Index.

Fuel Oil—Energy Information Agency, 2000 to 2001 annual average state prices for #2 distillate residential fuel oil (U.S. average change was used for states with too little fuel oil consumption to have values).

Electricity—Energy Information Agency, 2000 to 2001 annual average residential electric prices per Kilowatt-hour.

Natural Gas—Energy Information Agency, 2000 to 2001 annual average Natural Gas prices.

Water and Sewer—6/01 to 6/02 BLS Consumer Price Index Detailed Report.

The sum of the nine cost components equals 100 percent of operating costs for purposes of OCAF calculations. To calculate the OCAFs, the selected inflation factors are multiplied by the relevant state-level operating cost percentages derived from the previously referenced analysis of FHA insured projects. For instance, if wages in Virginia comprised 50 percent of total operating cost expenses and wages increased by 4 percent from June 2001 to June 2002, the wage increase component of the Virginia OCAF for 2003 would be 2.0 percent ($4\% \times 50\%$). This 2.0 percent would then be added to the increases for the other eight expense categories to calculate the 2002 OCAF for Virginia. These types of calculations were made for each state for each of the nine cost components, and are included as the Appendix to this Notice.

II. MAHRA and LIHPRHA OCAF Procedures

The Multifamily Assisted Housing Reform and Affordability Act of 1997 (title V of Pub. L. 105–65, approved October 7, 1997; 42 U.S.C. 1437f note (MAHRA)) as amended by the Preserving Affordable Housing for Senior Citizens and Families into the 21st Century Act of 1999, created the Mark-to-Market Program to reduce the cost of federal housing assistance, enhance HUD's administration of such assistance, and to ensure the continued affordability of units in certain multifamily housing projects. Section 524 of MAHRA authorizes renewal of Section 8 project-based assistance contracts for projects without Restructuring Plans under the Mark-to-Market Program, including renewals that are not eligible for Plans and those for which the owner does not request Plans. Renewals must be at rents not exceeding comparable market rents except for certain projects. For Section 8 Moderate Rehabilitation projects, other than single room occupancy projects (SROs) under the Stewart B. McKinney Homeless Assistance Act (McKinney Act, 42 U.S.C. 11301 *et seq.*), that are eligible for renewal under section 524(b)(3) of MAHRA, the renewal rents are required to be set at the lesser of: (1) The existing rents under the expiring contract, as adjusted by the OCAF; (2) fair market rents (less any amounts allowed for tenant-purchased utilities; or (3) comparable market rents for the market area.

The Low-Income Housing Preservation and Resident Homeownership Act of 1990 (''LIHPRHA'') (*see,* in particular, section 222(a)(2)(G)(i) of LIHPRHA, 12 U.S. 4112(a)(2)(G) and the regulations at 24 CFR 248.145(a)(9)) requires that future rent adjustments for LIHPRHA projects be made by applying an annual factor to be determined by the Secretary to the portion of project rent attributable to

operating expenses for the project and, where the owner is a priority purchaser, to the portion of project rent attributable to project oversight costs.

III. Findings and Certifications

Environmental Impact

This issuance sets forth rate determinations and related external administrative requirements and procedures that do not constitute a development decision affecting the physical condition of specific project areas or building sites. Accordingly, under 24 CFR 50.19(c)(6), this notice is categorically excluded from environmental review under the National Environmental Policy Act of 1969 (42 U.S.C. 4321).

Executive Order 13132, Federalism

This final rule does not have federalism implications and does not impose substantial direct compliance costs on state and local governments or preempt state law within the meaning of Executive Order 13132 (entitled ''Federalism'').

Catalog of Federal Domestic Assistance Number

The Catalog of Federal Domestic Assistance Number for this program is 14.187.

Dated: January 14, 2003.

Mel Martinez,

Secretary.

OPERATING COST ADJUSTMENT FACTORS FOR 2003

State	2003 OCAFS
Alabama	2.5%
Alaska	2.9%
Arizona	1.8%
Arkansas	3.0%
California	2.9%
Colorado	3.7%
Connecticut	3.3%
Delaware	1.5%
Dist. of Columbia	3.7%
Florida	3.0%
Georgia	2.6%
Hawaii	2.0%
Idaho	2.5%
Illinois	2.9%
Indiana	2.7%
Iowa	2.8%
Kansas	3.4%
Kentucky	3.2%
Louisiana	2.8%
Maine	1.2%
Maryland	2.6%
Massachusetts	4.7%
Michigan	2.3%
Minnesota	3.0%
Mississippi	2.8%
Missouri	3.1%
Montana	3.9%

OPERATING COST ADJUSTMENT FACTORS FOR 2003—Continued

State	2003 OCAFS
Nebraska	3.2%
Nevada	3.4%
New Hampshire	3.0%
New Jersey	1.9%
New Mexico	3.9%
New York	2.4%
N. Carolina	2.2%
N. Dakota	2.7%
Ohio	3.0%
Oklahoma	3.2%
Oregon	2.0%
Pennsylvania	4.2%
Rhode Island	3.9%
S. Carolina	2.3%
S. Dakota	3.5%
Tennessee	2.3%
Texas	3.5%
Utah	3.4%
Vermont	2.3%
Virginia	2.9%
Washington	2.8%
W. Virginia	1.9%
Wisconsin	2.6%
Wyoming	3.9%
Pacific Islands	3.3%
Puerto Rico	2.5%
Virgin Islands	2.0%
U.S. Average	3.0%

[FR Doc. 03–1224 Filed 1–17–03; 8:45 am]

BILLING CODE 4210–27–P

DEPARTMENT OF THE INTERIOR

Fish and Wildlife Service

50 CFR Part 17

Endangered and Threatened Wildlife and Plants; Extension of Public Comment Period and Notice of Availability of a Draft Environmental Assessment and Receipt of an Application for an Incidental Take Permit for the Briargate Development, El Paso County, CO

AGENCY: Fish and Wildlife Service, Interior.

ACTION: Notice of availability and receipt of application; extension of public comment period.

SUMMARY: This notice advises the public that La Plata Investments, LLC (Applicant) has applied to the Fish and Wildlife Service (Service) for an Incidental Take Permit pursuant to Section 10(a)(1)(B) of the Endangered Species Act of 1973, as amended (Act). The Service proposes to issue a 30-year permit to the Applicant that would authorize the incidental take of the Preble's meadow jumping mouse (*Zapus hudsonius preblei*) (Preble's), federally listed as threatened, and loss and modification of its habitat associated with construction of a residential and commercial development in El Paso County, Colorado. The permit application includes a combined Environmental Assessment/Habitat Conservation Plan (Plan), which is available for public review and comment. We previously published a notice requesting comment on this proposal on November 22, 2002 (67 FR 70453). We received a request to extend the comment period and are hereby granting that request for an additional 30 days. Comments previously submitted need not be resubmitted as they have already been incorporated into the public record and will be fully considered in our final decision on the Plan. Comments submitted during this comment period also will be incorporated into the public record and will be fully considered. All comments on the Plan and permit application will become part of the administrative record and will be available to the public.

DATES: Written comments on the permit application and plan should be received on or before February 20, 2003.

ADDRESSES: Comments regarding the permit application or the Plan should be addressed to LeRoy Carlson, Field Supervisor, Colorado Ecological Services Field Office, U.S. Fish and Wildlife Service, 755 Parfet Street, Suite 361, Lakewood, Colorado 80215, or by facsimile to 303–275–2371. Comments and materials received, as well as supporting documentation used in preparation of this proposed rule, may be viewed, by appointment, during normal business hours, at the U.S. Fish and Wildlife Service's Colorado Field Office.

FOR FURTHER INFORMATION CONTACT: Kathleen Linder, Fish and Wildlife Biologist, Colorado Field Office, at the above address or telephone 303–275–2370.

SUPPLEMENTARY INFORMATION:

Document Availability

Individuals wishing copies of the Plan and associated documents for review should immediately contact the above office. Documents also will be available for public inspection, by appointment, during normal business hours at the above address.

Background

Section 9 of the Act and Federal regulation prohibits the ''take'' of a species listed as endangered or threatened. However, the Service may issue permits to authorize ''incidental take'' (defined by the Act as take that is

incidental to, and not the purpose of, the carrying out of an otherwise lawful activity) of listed species under limited circumstances. Regulations governing permits for threatened species are promulgated in 50 CFR 17.32; regulations governing permits for endangered species are promulgated in 50 CFR 17.22.

The proposed action is the issuance of a permit under section 10(a)(1)(B) of the Act to allow the incidental take of Preble's during the construction of a residential and commercial development at the site. The project will directly affect approximately 33.97 hectares (83.93 acres), of which 10.68 hectares (26.38 acres) are temporary impacts and the remaining 23.29 hectares (57.55 acres) are permanent impacts to potential habitat for Preble's. A Plan has been developed as part of the preferred alternative.

The Preble's is the only federally-listed species that occurs on site and has the potential to be directly affected by the proposed project. The Applicant has agreed to implement the following measures to minimize and mitigate the impacts that may result from project construction:

1. Enhance 4.41 hectares (10.90 acres) of Preble's habitat along the North Fork of Pine Creek. Enhancement will include transplanting native shrubs from areas of impact to protected habitat, over-seeding of native grasses, and noxious weed control.

2. Restoration of 10.68 hectares (26.38 acres) along the main branch of Pine Creek, and the North and South forks of Pine Creek. Restoration will include the immediate revegetation of the site with native grass seed and clumps of native shrubs.

3. Preservation of 64.13 hectares (158.48 acres) of Preble's habitat by the placement of deed restrictions over the property. This is the result of protecting all remaining Preble's habitat within the project area. An additional 7.75 hectares (19.14 acres) of natural open space adjacent to Preble's habitat also will be protected.

4. Off-site enhancement and restoration of approximately 75 hectares (186 acres) along Kettle Creek, an area known to have a healthy population of Preble's. Enhancement will include transplanting native shrubs from areas of impact to protected habitat, over-seeding of native grasses, and noxious weed control. Existing horse trails along the creek bottom will be restored by stabilizing the immediate area, then seeding with native grass species.

5. Off-site preservation of the 75-hectare (186-acre) Kettle Creek Preserve. Initially the property will be protected by deed restrictions. After that, the deed to the entire property will be turned over to the Trust for Public Lands, who is in the process of forming a new not-for-profit organization to take control of these types of properties and manage them for the sole purpose of endangered species habitat.

We previously published a notice requesting comment on this proposal on November 22, 2002 (67 FR 70453). On December 12, 2002, we received a request from Earthjustice Legal Defense Fund to extend the comment period an additional 60 days. Because the Plan and permit application have already been available for 30 days and the request did not contain sufficient rationale for unduly delaying a decision on the permit, we have determined that an additional 60 days is not warranted. However, we are hereby granting an extension for an additional 30 days.

This notice is provided pursuant to section 10(c) of the Act. The Service will evaluate the permit application, the Plan, and comments submitted therein to determine whether the application meets the requirements of section 10(a) of the Act. If it is determined that those requirements are met, a permit will be issued for the incidental take of Preble's. The final permit decision will be made no sooner than 30 days from the date of this notice.

Dated: December 20, 2002.

John A. Blankenship,

Deputy Regional Director, Denver, Colorado.

[FR Doc. 03–1066 Filed 1–17–03; 8:45 am]

BILLING CODE 4310–55–P

DEPARTMENT OF THE INTERIOR

Bureau of Land Management

[AK–933–1430–ET; AA–26417]

Notice of Proposed Extension of Withdrawal and Opportunity for Public Meeting; Alaska

AGENCY: Bureau of Land Management, Interior.

ACTION: Notice.

SUMMARY: The U.S. Geological Survey proposes to extend Public Land Order No. 6458 for a 20-year period. This order withdrew public land from settlement, sale, location, or entry under the general land laws, including the mining laws to protect the Sitka Magnetic Observatory Site. This Notice also gives an opportunity to comment on the proposed action and to request a public meeting.

DATES: Comments and requests for a public meeting must be received by April 21, 2003.

ADDRESSES: Comments and requests should be sent to the Alaska State Director, BLM Alaska State Office, 222 West 7th Avenue, No. 13, Anchorage, Alaska 99513–7599. You can access information about sending comments electronically at: *http://www.anchorage.ak.blm.gov/sitkamos.html*.

FOR FURTHER INFORMATION CONTACT: Robbie J. Havens, BLM Alaska State Office, 907–271–5477.

SUPPLEMENTARY INFORMATION: On July 25, 2002, the U.S. Geological Survey requested that Public Land Order No. 6458 be extended for an additional 20-year period. Public Land Order No. 6458, which expires on September 6, 2003, withdrew 117.13 acres from settlement, sale, location or entry under the general land laws, including the mining laws to protect the Sitka Magnetic Observatory Site, as it affects the following described land:

Copper River Meridian
T. 55 S., R. 63 E., U.S. Survey No. 2545, Lot 4.
The area described contains 117.13 acres.

For a period of 90 days from the date of publication of this notice, all persons who wish to submit comments, suggestions, or objections in connection with the proposed withdrawal extension may present their views in writing to the Alaska State Director of the Bureau of Land Management.

Notice is hereby given that an opportunity for a public meeting is afforded in connection with the proposed extension. All interested persons who desire a public meeting for the purpose of being heard on the proposed withdrawal extension must submit a written request to the Alaska State Director within 90 days from the date of publication of this notice. If the authorized officer determines that a public meeting will be held, a notice of the time and place will be published in the **Federal Register** at least 30 days before the scheduled date of the meeting.

This application will be processed in accordance with the regulations set forth in 43 CFR 2300.

Dated: November 25, 2002.

Linda J. Resseguie,

Acting Chief, Branch of Lands, Division of Lands, Minerals, and Resources.

[FR Doc. 03–1252 Filed 1–17–03; 8:45 am]

BILLING CODE 4310–JA–P

INTERNATIONAL TRADE COMMISSION

[Investigation No. 731–TA–1010 (Final)]

Lawn and Garden Steel Fence Posts from China

AGENCY: United States International Trade Commission.

ACTION: Scheduling of the final phase of an antidumping investigation.

SUMMARY: The Commission hereby gives notice of the scheduling of the final phase of antidumping investigation No. 731–TA–1010 (Final) under section 735(b) of the Tariff Act of 1930 (19 U.S.C. § 1673d(b)) (the Act) to determine whether an industry in the United States is materially injured or threatened with material injury, or the establishment of an industry in the United States is materially retarded, by reason of less-than-fair-value imports from China of lawn and garden steel fence posts, provided for in subheading 7326.90.85 of the Harmonized Tariff Schedule of the United States.

For further information concerning the conduct of this phase of the investigation, hearing procedures, and rules of general application, consult the Commission's rules of practice and procedure, part 201, subparts A through E (19 CFR part 201), and part 207, subparts A and C (19 CFR part 207).

EFFECTIVE DATE: December 4, 2002.

FOR FURTHER INFORMATION CONTACT: Christopher J. Cassise (202–708–5408), Office of Investigations, U.S. International Trade Commission, 500 E Street SW, Washington, DC 20436. Hearing-impaired persons can obtain information on this matter by contacting the Commission's TDD terminal on 202–205–1810. Persons with mobility impairments who will need special assistance in gaining access to the Commission should contact the Office of the Secretary at 202–205–2000. General information concerning the Commission may also be obtained by accessing its internet server *(http://www.usitc.gov).* The public record for this investigation may be viewed on the Commission's electronic docket (EDIS–ON–LINE) at *http://dockets.usitc.gov/eol/public.*

SUPPLEMENTARY INFORMATION:

Background—The final phase of this investigation is being scheduled as a result of an affirmative preliminary determination by the Department of Commerce that imports of lawn and garden steel fence posts from China are being sold in the United States at less than fair value within the meaning of section 733 of the Act (19 U.S.C. § 1673b). The investigation was requested in a petition filed on May 1, 2002, by Steel City Corp. of Youngstown, OH.

Participation in the investigation and public service list—Persons, including industrial users of the subject merchandise and, if the merchandise is sold at the retail level, representative consumer organizations, wishing to participate in the final phase of this investigation as parties must file an entry of appearance with the Secretary to the Commission, as provided in section 201.11 of the Commission's rules, no later than 21 days prior to the hearing date specified in this notice. A party that filed a notice of appearance during the preliminary phase of the investigation need not file an additional notice of appearance during this final phase. The Secretary will maintain a public service list containing the names and addresses of all persons, or their representatives, who are parties to the investigation.

Limited disclosure of business proprietary information (BPI) under an administrative protective order (APO) and BPI service list—Pursuant to section 207.7(a) of the Commission's rules, the Secretary will make BPI gathered in the final phase of this investigation available to authorized applicants under the APO issued in the investigation, provided that the application is made no later than 21 days prior to the hearing date specified in this notice. Authorized applicants must represent interested parties, as defined by 19 U.S.C. § 1677(9), who are parties to the investigation. A party granted access to BPI in the preliminary phase of the investigation need not reapply for such access. A separate service list will be maintained by the Secretary for those parties authorized to receive BPI under the APO.

Staff report—The prehearing staff report in the final phase of this investigation will be placed in the nonpublic record on April 8, 2003, and a public version will be issued thereafter, pursuant to section 207.22 of the Commission's rules.

Hearing—The Commission will hold a hearing in connection with the final phase of this investigation beginning at 9:30 a.m. on April 22, 2003, at the U.S. International Trade Commission Building. Requests to appear at the hearing should be filed in writing with the Secretary to the Commission on or before April 14, 2003. A nonparty who has testimony that may aid the Commission's deliberations may request permission to present a short statement at the hearing. All parties and nonparties desiring to appear at the hearing and make oral presentations should attend a prehearing conference to be held at 9:30 a.m. on April 16, 2003, at the U.S. International Trade Commission Building. Oral testimony and written materials to be submitted at the public hearing are governed by sections 201.6(b)(2), 201.13(f), and 207.24 of the Commission's rules. Parties must submit any request to present a portion of their hearing testimony *in camera* no later than 7 days prior to the date of the hearing.

Written submissions—Each party who is an interested party shall submit a prehearing brief to the Commission. Prehearing briefs must conform with the provisions of section 207.23 of the Commission's rules; the deadline for filing is April 15, 2003. Parties may also file written testimony in connection with their presentation at the hearing, as provided in section 207.24 of the Commission's rules, and posthearing briefs, which must conform with the provisions of section 207.25 of the Commission's rules. The deadline for filing posthearing briefs is April 29, 2003; witness testimony must be filed no later than three business days before the hearing. In addition, any person who has not entered an appearance as a party to the investigation may submit a written statement of information pertinent to the subject of the investigation on or before May 13, 2003. On May 13, 2003, the Commission will make available to parties all information on which they have not had an opportunity to comment. Parties may submit final comments on this information on or before May 15, 2003, but such final comments must not contain new factual information and must otherwise comply with section 207.30 of the Commission's rules. All written submissions must conform with the provisions of section 201.8 of the Commission's rules; any submissions that contain BPI must also conform with the requirements of sections 201.6, 207.3, and 207.7 of the Commission's rules. The Commission's rules do not authorize filing of submissions with the Secretary by facsimile or electronic means except to the extent provided by section 201.8 of the Commission's rules, as amended (67 FR 68036, November 8, 2002).

In accordance with sections 201.16(c) and 207.3 of the Commission's rules, each document filed by a party to the investigation must be served on all other parties to the investigation (as identified by either the public or BPI service list), and a certificate of service must be timely filed. The Secretary will not accept a document for filing without a certificate of service.

Authority: This investigation is being conducted under authority of title VII of the Tariff Act of 1930; this notice is published pursuant to section 207.21 of the Commission's rules.

By order of the Commission.

Issued: January 15, 2003.

Marilyn R. Abbott,

Secretary to the Commission.

[FR Doc. 03–1232 Filed 1–17–03; 8:45 am]

BILLING CODE 7020–02–P

LEGAL SERVICES CORPORATION

Sunshine Act Meeting of the Finance Committee of the Board of Directors

Time and Date: The Finance Committee of the Board of Directors of the Legal Services Corporation will meet on January 23, 2003 via conference call. The meeting will begin at 3:00 p.m., E.S.T. and continue until the conclusion of the Committee's agenda.

Location: 750 First Street, NE, 11th Floor, Washington, DC 20002, in Room 11026.

Status of Meeting: Open, except that a portion of the meeting may be closed pursuant to a vote of the Board of Directors to hold an executive session. At the closed session, the Corporation's General Counsel will report to the Committee on litigation to which the Corporation is or may become a party, and the Committee may act on the matters reported. The closing is authorized by the relevant provisions of the Government in the Sunshine Act [5 U.S.C. 552b(c)(10)] and the corresponding provisions of the Legal Services Corporation's implementing regulation [45 CFR 1622.5(h)]. A copy of the General Counsel's Certification that the closing is authorized by law will be available upon request.

Matters to be Considered:

Open Session

1. Approval of agenda.

Closed Session

2. Consider and act on the General Counsel's report on potential and pending litigation involving LSC.

Open Session

3. Consider and act on other business.
4. Public Comment.

FOR FURTHER INFORMATION CONTACT: Victor M. Fortuno, Vice President for Legal Affairs, General Counsel & Corporate Secretary, at (202) 336–8800.

Special Needs: Upon request, meeting notices will be made available in alternate formats to accommodate visual and hearing impairments. Individuals who have a disability and need an accommodation to attend the meeting may notify Elizabeth Cushing, at (202) 336–8800.

Dated: January 16, 2003.

Victor M. Fortuno,

Vice President for Legal Affairs, General Counsel & Corporate Secretary.

[FR Doc. 03–1420 Filed 1–16–03; 3:59 pm]

BILLING CODE 7050–01–M

NATIONAL AERONAUTICS AND SPACE ADMINISTRATION

[Notice (03–003)]

NASA Advisory Council, Biological and Physical Research Advisory Committee, Commercial Advisory Subcommittee; Meeting.

AGENCY: National Aeronautics and Space Administration.

ACTION: Notice of meeting.

SUMMARY: In accordance with the Federal Advisory Committee Act, Pub. L. 92–463, as amended, the National Aeronautics and Space Administration announces a meeting of the NASA Advisory Council, Biological and Physical Research Advisory Committee (BPRAC), Commercial Advisory Subcommittee (CAS).

DATES: Wednesday, February 12, 2003, 8 a.m. to 5 p.m.

ADDRESSES: NASA Headquarters, 300 E Street, SW, Room MIC–6, Washington, DC. Attendees must check in at the Security Desk and be escorted to the conference room.

FOR FURTHER INFORMATION CONTACT: Ms. Candace Livingston, Code US, National Aeronautics and Space Administration, Washington, DC 20546, (202) 358–0697.

SUPPLEMENTARY INFORMATION: The meeting will be open to the public up to the seating capacity of the room. Advance notice of attendance to the Executive Secretary is requested.

The agenda for the meeting will include the following topics:

—Status of Subcommittee and BPRAC Meetings
—Status of the proposal for the International Space Station Management Approach
—Status of the Organization
—Feedback from Office of Biological and Physical Research Program Review
—Discussion of Strategic Program Issues
—Recommendation and Wrap-Up

It is imperative that the meeting be held on this date to accommodate the scheduling priorities of the key participants. Visitors will be requested to sign a visitor's register. Due to the increased security at NASA facilities, any members of the public who wish to attend this meeting of the Commercial Advisory Subcommittee must provide their name, date and place of birth, citizenship, social security number, or passport and visa information (number, country of issuance and expiration), business address and phone number, if any. This information is to be provided at least 72 hours (5 p.m. EDT on February 7, 2003) prior to the date of the public meeting. Identification information is to be provided to Addie Robinson, (202) 358–4566, *arobinso@hq.nasa.gov*. Failure to timely provide such information may result in denial of attendance. Photo identification may be requested for entry into the building. Persons with disabilities who require assistance should indicated this in their message. Due to limited availability of seating, members of the public will be admitted on a first-come, first-serve basis. News media wishing to attend the meeting should follow standard accreditation procedures. Members of the press who have questions about these procedures should contact the NASA Headquarters newsroom (202) 358–1600.

June W. Edwards,

Advisory Committee Management Officer, National Aeronautics and Space Administration.

[FR Doc. 03–1217 Filed 1–17–03; 8:45 am]

BILLING CODE 7510–01–P

NATIONAL AERONAUTICS AND SPACE ADMINISTRATION

[Notice 03–004]

U.S. Centennial of Flight Commission

AGENCY: National Aeronautics and Space Administration.

ACTION: Notice of meeting.

SUMMARY: In accordance with the Federal Advisory Committee Act, Public Law 92–463, as amended, the National Aeronautics and Space Administration announces a meeting of the U.S. Centennial of Flight Commission.

DATES: Wednesday, January 29, 2003, 1 p.m. to 4 p.m.

ADDRESSES: National Aeronautics and Space Administration, 300 E Street, SW., Room 5H46 (MIC 5), Washington, DC. Attendees must check in at the Security Desk and be escorted to the conference room.

FOR FURTHER INFORMATION CONTACT: Ms. Beverly Farmarco, Code IC, National Aeronautics and Space Administration, Washington, DC 20546, 202/358–1903.

SUPPLEMENTARY INFORMATION: The meeting will be open to the public up to the seating capacity of the room. The agenda for the meeting is as follows:

—Opening Remarks
—Highlights from Centennial Kick-Off Events
—Web Site Demo
—Aerospace Industries Association (AIA) National Model Rocket Competition
—North Carolina Status
—Next Quarterly Report
—Licensed Products Update
—Aviation Foundation of America's National Air Tours
—Closing Comments

It is imperative that the meeting be held on this date to accommodate the scheduling priorities of the key participants. Visitors will be requested to sign a visitor's register. Due to the increased security at NASA facilities, any members of the public who wish to attend this meeting of the Centennial of Flight Commission must provide their name, date and place of birth, citizenship, social security number, or passport and visa information (number, country of issuance and expiration), business address and phone number, if any. This information is to be provided at least 72 hours (5 p.m. e.d.t. on January 24, 2003) prior to the date of the public meeting. Identification information is to be provided to Beverly Farmarco, (202) 358–1903, *bfarmarc@hq.nasa.gov.* Failure to timely provide such information may result in denial of attendance. Photo identification may be required for entry into the building. Persons with disabilities who require assistance should indicate this in their message. Due to limited availability of seating, members of the public will be admitted on a first-come, first-serve basis. News media wishing to attend the meeting should follow standard accreditation procedures. Members of the press who have questions about these procedures should contact the NASA Headquarters newsroom (202/358–1600).

June W. Edwards,

Advisory Committee Management Officer, National Aeronautics and Space Administration.

[FR Doc. 03–1218 Filed 1–17–03; 8:45 am]

BILLING CODE 7510–01–P

NATIONAL CREDIT UNION ADMINISTRATION

Sunshine Act Meeting

TIME AND DATE: 10 a.m., Thursday, January 23, 2003.

PLACE: Board Room, 7th Floor, Room 7047, 1755 Duke Street, Alexandria, VA 22314–3428.

STATUS: Open.

MATTERS TO BE CONSIDERED:

1. Quarterly Insurance Fund Report.
2. Texas Member Business Loan Rule Proposed Change.

FOR FURTHER INFORMATION CONTACT: Becky Baker, Secretary of the Board, Telephone: 703–518–6304.

Becky Baker,

Secretary of the Board.

[FR Doc. 03–1380 Filed 1–16–03; 2:30 pm]

BILLING CODE 7535–01–M

NUCLEAR REGULATORY COMMISSION

Biweekly Notice; Applications and Amendments to Facility Operating Licenses

Involving No Significant Hazards Considerations

I. Background

Pursuant to Public Law 97–415, the U.S. Nuclear Regulatory Commission (the Commission or NRC staff) is publishing this regular biweekly notice. Public Law 97–415 revised section 189 of the Atomic Energy Act of 1954, as amended (the Act), to require the Commission to publish notice of any amendments issued, or proposed to be issued, under a new provision of section 189 of the Act. This provision grants the Commission the authority to issue and make immediately effective any amendment to an operating license upon a determination by the Commission that such amendment involves no significant hazards consideration, notwithstanding the pendency before the Commission of a request for a hearing from any person.

This biweekly notice includes all notices of amendments issued, or proposed to be issued from, December 27, 2002 through January 9, 2003. The last biweekly notice was published on January 7, 2003 (68 FR 798).

Notice of Consideration of Issuance of Amendments to Facility Operating Licenses, Proposed No Significant Hazards Consideration Determination, and Opportunity for a Hearing

The Commission has made a proposed determination that the following amendment requests involve no significant hazards consideration. Under the Commission's regulations in 10 CFR 50.92, this means that operation of the facility in accordance with the proposed amendment would not (1) involve a significant increase in the probability or consequences of an accident previously evaluated; or (2) create the possibility of a new or different kind of accident from any accident previously evaluated; or (3) involve a significant reduction in a margin of safety. The basis for this proposed determination for each amendment request is shown below.

The Commission is seeking public comments on this proposed determination. Any comments received within 30 days after the date of publication of this notice will be considered in making any final determination.

Normally, the Commission will not issue the amendment until the expiration of the 30-day notice period. However, should circumstances change during the notice period such that failure to act in a timely way would result, for example, in derating or shutdown of the facility, the Commission may issue the license amendment before the expiration of the 30-day notice period, provided that its final determination is that the amendment involves no significant hazards consideration. The final determination will consider all public and State comments received before action is taken. Should the Commission take this action, it will publish in the **Federal Register** a notice of issuance and provide for opportunity for a hearing after issuance. The Commission expects that the need to take this action will occur very infrequently.

Written comments may be submitted by mail to the Chief, Rules and Directives Branch, Division of Administrative Services, Office of Administration, U.S. Nuclear Regulatory Commission, Washington, DC 20555–0001, and should cite the publication date and page number of this **Federal Register** notice. Written comments may also be delivered to Room 6D22, Two White Flint North, 11545 Rockville Pike, Rockville, Maryland, from 7:30 a.m. to 4:15 p.m. Federal workdays. Copies of written comments received may be examined at the Commission's Public Document Room (PDR), located at One White Flint North, 11555 Rockville Pike (first floor), Rockville, Maryland. The filing of requests for a hearing and petitions for leave to intervene is discussed below.

By February 20, 2003, the licensee may file a request for a hearing with respect to issuance of the amendment to the subject facility operating license and any person whose interest may be affected by this proceeding and who wishes to participate as a party in the proceeding must file a written request

for a hearing and a petition for leave to intervene. Requests for a hearing and a petition for leave to intervene shall be filed in accordance with the Commission's ''Rules of Practice for Domestic Licensing Proceedings'' in 10 CFR Part 2. Interested persons should consult a current copy of 10 CFR 2.714,[1] which is available at the Commission's PDR, located at One White Flint North, 11555 Rockville Pike (first floor), Rockville, Maryland. Publicly available records will be accessible from the Agencywide Documents Access and Management System's (ADAMS) Public Electronic Reading Room on the Internet at the NRC web site, *http://www.nrc.gov/reading-rm/doc-collections/cfr/*. If a request for a hearing or petition for leave to intervene is filed by the above date, the Commission or an Atomic Safety and Licensing Board, designated by the Commission or by the Chairman of the Atomic Safety and Licensing Board Panel, will rule on the request and/or petition; and the Secretary or the designated Atomic Safety and Licensing Board will issue a notice of a hearing or an appropriate order.

As required by 10 CFR 2.714, a petition for leave to intervene shall set forth with particularity the interest of the petitioner in the proceeding, and how that interest may be affected by the results of the proceeding. The petition should specifically explain the reasons why intervention should be permitted with particular reference to the following factors: (1) The nature of the petitioner's right under the Act to be made a party to the proceeding; (2) the nature and extent of the petitioner's property, financial, or other interest in the proceeding; and (3) the possible effect of any order which may be entered in the proceeding on the petitioner's interest. The petition should also identify the specific aspect(s) of the subject matter of the proceeding as to which petitioner wishes to intervene. Any person who has filed a petition for leave to intervene or who has been admitted as a party may amend the petition without requesting leave of the Board up to 15 days prior to the first prehearing conference scheduled in the proceeding, but such an amended petition must satisfy the specificity requirements described above.

Not later than 15 days prior to the first prehearing conference scheduled in the proceeding, a petitioner shall file a supplement to the petition to intervene which must include a list of the contentions which are sought to be litigated in the matter. Each contention must consist of a specific statement of the issue of law or fact to be raised or controverted. In addition, the petitioner shall provide a brief explanation of the bases of the contention and a concise statement of the alleged facts or expert opinion which support the contention and on which the petitioner intends to rely in proving the contention at the hearing. The petitioner must also provide references to those specific sources and documents of which the petitioner is aware and on which the petitioner intends to rely to establish those facts or expert opinion. Petitioner must provide sufficient information to show that a genuine dispute exists with the applicant on a material issue of law or fact. Contentions shall be limited to matters within the scope of the amendment under consideration. The contention must be one which, if proven, would entitle the petitioner to relief. A petitioner who fails to file such a supplement which satisfies these requirements with respect to at least one contention will not be permitted to participate as a party.

Those permitted to intervene become parties to the proceeding, subject to any limitations in the order granting leave to intervene, and have the opportunity to participate fully in the conduct of the hearing, including the opportunity to present evidence and cross-examine witnesses.

If a hearing is requested, the Commission will make a final determination on the issue of no significant hazards consideration. The final determination will serve to decide when the hearing is held.

If the final determination is that the amendment request involves no significant hazards consideration, the Commission may issue the amendment and make it immediately effective, notwithstanding the request for a hearing. Any hearing held would take place after issuance of the amendment.

If the final determination is that the amendment request involves a significant hazards consideration, any hearing held would take place before the issuance of any amendment.

A request for a hearing or a petition for leave to intervene must be filed with the Secretary of the Commission, U.S. Nuclear Regulatory Commission, Washington, DC 20555–0001, Attention: Rulemaking and Adjudications Staff, or may be delivered to the Commission's PDR, located at One White Flint North, 11555 Rockville Pike (first floor), Rockville, Maryland, by the above date. Because of continuing disruptions in delivery of mail to United States Government offices, it is requested that petitions for leave to intervene and requests for hearing be transmitted to the Secretary of the Commission either by means of facsimile transmission to 301–415–1101 or by e-mail to *hearingdocket@nrc.gov*. A copy of the request for hearing and petition for leave to intervene should also be sent to the Office of the General Counsel, U.S. Nuclear Regulatory Commission, Washington, DC 20555–0001, and because of continuing disruptions in delivery of mail to United States Government offices, it is requested that copies be transmitted either by means of facsimile transmission to 301–415–3725 or by e-mail to *OGCMailCenter@nrc.gov*. A copy of the request for hearing and petition for leave to intervene should also be sent to the attorney for the licensee.

Nontimely filings of petitions for leave to intervene, amended petitions, supplemental petitions and/or requests for a hearing will not be entertained absent a determination by the Commission, the presiding officer or the Atomic Safety and Licensing Board that the petition and/or request should be granted based upon a balancing of factors specified in 10 CFR 2.714(a)(1)(i)–(v) and 2.714(d).

For further details with respect to this action, see the application for amendment which is available for public inspection at the Commission's PDR, located at One White Flint North, 11555 Rockville Pike (first floor), Rockville, Maryland. Publicly available records will be accessible from the Agencywide Documents Access and Management System's (ADAMS) Public Electronic Reading Room on the Internet at the NRC Web site, *http://www.nrc.gov/reading-rm/adams.html*. If you do not have access to ADAMS or if there are problems in accessing the documents located in ADAMS, contact the NRC PDR Reference staff at 1–800–397–4209, 304–415–4737 or by e-mail to *pdr@nrc.gov*.

AmerGen Energy Company, LLC, Docket No. 50–461, Clinton Power Station, Unit 1, DeWitt County, Illinois

Date of amendment request: November 27, 2002.

Description of amendment request: The proposed amendment deletes requirements from the technical specifications (TS) and other elements of the licensing bases to maintain a Post Accident Sampling System (PASS). Licensees were generally required to implement PASS upgrades as described

[1] The most recent version of Title 10 of the Code of Federal Regulations, published January 1, 2002, inadvertently omitted the last sentence of 10 CFR 2.714 (d) and paragraphs (d)(1) and (d)(2) regarding petitions to intervene and contentions. For the complete, corrected text of 10 CFR 2.714(d), please see 67 FR 20884; April 29, 2002.

in NUREG–0737, ''Clarification of TMI [Three Mile Island] Action Plan Requirements,'' and Regulatory Guide 1.97, ''Instrumentation for Light-Water-Cooled Nuclear Power Plants to Assess Plant and Environs Conditions During and Following an Accident.'' Implementation of these upgrades was an outcome of the lessons learned from the accident that occurred at TMI Unit 2. Requirements related to PASS were imposed by Order for many facilities and were added to or included in the TS for nuclear power reactors currently licensed to operate. Lessons learned and improvements implemented over the last 20 years have shown that the information obtained from PASS can be readily obtained through other means or is of little use in the assessment and mitigation of accident conditions.

The changes are based on NRC-approved Technical Specification Task Force (TSTF) Standard Technical Specification Change Traveler, TSTF–413, ''Elimination of Requirements for a Post Accident Sampling System (PASS).'' The NRC staff issued a notice of opportunity for comment in the **Federal Register** on December 27, 2001 (66 FR 66949), on possible amendments concerning TSTF–413, including a model safety evaluation and model no significant hazards consideration (NSHC) determination, using the consolidated line item improvement process. The NRC staff subsequently issued a notice of availability of the models for referencing in license amendment applications in the **Federal Register** on March 20, 2002 (67 FR 13027). The licensee affirmed the applicability of the following NSHC determination in its application dated November 27, 2002.

Basis for proposed no significant hazards consideration determination: As required by 10 CFR 50.91(a), an analysis of the issue of no significant hazards consideration is presented below:

Criterion 1—The Proposed Change Does Not Involve a Significant Increase in the Probability or Consequences of an Accident Previously Evaluated.

The PASS was originally designed to perform many sampling and analysis functions. These functions were designed and intended to be used in post accident situations and were put into place as a result of the TMI–2 accident. The specific intent of the PASS was to provide a system that has the capability to obtain and analyze samples of plant fluids containing potentially high levels of radioactivity, without exceeding plant personnel radiation exposure limits. Analytical results of these samples would be used largely for verification purposes in aiding the plant staff in assessing the extent of core damage and subsequent offsite radiological dose projections. The system was not intended to and does not serve a function for preventing accidents and its elimination would not affect the probability of accidents previously evaluated.

In the 20 years since the TMI–2 accident and the consequential promulgation of post accident sampling requirements, operating experience has demonstrated that a PASS provides little actual benefit to post accident mitigation. Past experience has indicated that there exists in-plant instrumentation and methodologies available in lieu of a PASS for collecting and assimilating information needed to assess core damage following an accident. Furthermore, the implementation of Severe Accident Management Guidance (SAMG) emphasizes accident management strategies based on in-plant instruments. These strategies provide guidance to the plant staff for mitigation and recovery from a severe accident. Based on current severe accident management strategies and guidelines, it is determined that the PASS provides little benefit to the plant staff in coping with an accident.

The regulatory requirements for the PASS can be eliminated without degrading the plant emergency response. The emergency response, in this sense, refers to the methodologies used in ascertaining the condition of the reactor core, mitigating the consequences of an accident, assessing and projecting offsite releases of radioactivity, and establishing protective action recommendations to be communicated to offsite authorities. The elimination of the PASS will not prevent an accident management strategy that meets the initial intent of the post-TMI–2 accident guidance through the use of the SAMGs, the emergency plan (EP), the emergency operating procedures (EOP), and site survey monitoring that support modification of emergency plan protective action recommendations (PARs).

Therefore, the elimination of PASS requirements from Technical Specifications (TS) (and other elements of the licensing bases) does not involve a significant increase in the consequences of any accident previously evaluated.

Criterion 2—The Proposed Change Does Not Create the Possibility of a New or Different Kind of Accident from any Previously Evaluated.

The elimination of PASS related requirements will not result in any failure mode not previously analyzed. The PASS was intended to allow for verification of the extent of reactor core damage and also to provide an input to offsite dose projection calculations. The PASS is not considered an accident precursor, nor does its existence or elimination have any adverse impact on the pre-accident state of the reactor core or post accident confinement of radioisotopes within the containment building.

Therefore, this change does not create the possibility of a new or different kind of accident from any previously evaluated.

Criterion 3—The Proposed Change Does Not Involve a Significant Reduction in the Margin of Safety.

The elimination of the PASS, in light of existing plant equipment, instrumentation, procedures, and programs that provide effective mitigation of and recovery from reactor accidents, results in a neutral impact to the margin of safety. Methodologies that are not reliant on PASS are designed to provide rapid assessment of current reactor core conditions and the direction of degradation while effectively responding to the event in order to mitigate the consequences of the accident. The use of a PASS is redundant and does not provide quick recognition of core events or rapid response to events in progress. The intent of the requirements established as a result of the TMI–2 accident can be adequately met without reliance on a PASS.

Therefore, this change does not involve a significant reduction in the margin of safety.

The NRC staff proposes to determine that the amendment request involves no significant hazards consideration.

Attorney for licensee: Edward J. Cullen, Deputy General Counsel Exelon BSC—Legal, 2301 Market Street, Philadelphia, PA 19101.

NRC Section Chief: Anthony J. Mendiola.

AmerGen Energy Company, LLC, et al., Docket No. 50–219, Oyster Creek Nuclear Generating Station, Ocean County, New Jersey

Date of amendment request: November 27, 2002.

Description of amendment request: The proposed amendment would delete requirements from the Technical Specifications (TSs) and other elements of the licensing bases to maintain a Post Accident Sampling System (PASS). Licensees were generally required to implement PASS upgrades as described in NUREG–0737, ''Clarification of TMI [Three Mile Island] Action Plan Requirements,'' and Regulatory Guide 1.97, ''Instrumentation for Light-Water-Cooled Nuclear Power Plants to Assess Plant and Environs Conditions During and Following an Accident.'' Implementation of these upgrades was an outcome of the lessons learned from the accident that occurred at TMI Unit 2. Requirements related to PASS were imposed by Order for many facilities and were added to or included in the TSs for nuclear power reactors currently licensed to operate. However, lessons learned and improvements implemented over the last 20 years have shown that the information obtained from PASS can be readily obtained through other means, or is of little use in the assessment and mitigation of accident conditions.

The changes are based on Nuclear Regulatory Commission (NRC)-approved Technical Specification Task Force (TSTF) Standard Technical Specification Change Traveler, TSTF–413, ''Elimination of Requirements for a

Post Accident Sampling System (PASS).'' The NRC staff issued a notice of opportunity for comment in the **Federal Register** on December 27, 2001 (66 FR 66949), on possible amendments concerning TSTF–413, including a model safety evaluation and model no significant hazards consideration (NSHC) determination, using the consolidated line item improvement process. The NRC staff subsequently issued a notice of availability of the models for referencing in license amendment applications in the **Federal Register** on March 20, 2002 (67 FR 13027). The licensee affirmed the applicability of the following NSHC determination in its application dated November 27, 2002.

Basis for proposed no significant hazards consideration determination: As required by 10 CFR 50.91(a), an analysis of the issue of no significant hazards consideration is presented below:

Criterion 1—The Proposed Change Does Not Involve a Significant Increase in the Probability or Consequences of an Accident Previously Evaluated.

The PASS was originally designed to perform many sampling and analysis functions. These functions were designed and intended to be used in post accident situations and were put into place as a result of the TMI–2 accident. The specific intent of the PASS was to provide a system that has the capability to obtain and analyze samples of plant fluids containing potentially high levels of radioactivity, without exceeding plant personnel radiation exposure limits. Analytical results of these samples would be used largely for verification purposes in aiding the plant staff in assessing the extent of core damage and subsequent offsite radiological dose projections. The system was not intended to and does not serve a function for preventing accidents and its elimination would not affect the probability of accidents previously evaluated.

In the 20 years since the TMI–2 accident and the consequential promulgation of post accident sampling requirements, operating experience has demonstrated that a PASS provides little actual benefit to post accident mitigation. Past experience has indicated that there exists in-plant instrumentation and methodologies available in lieu of a PASS for collecting and assimilating information needed to assess core damage following an accident. Furthermore, the implementation of Severe Accident Management Guidance (SAMG) emphasizes accident management strategies based on in-plant instruments. These strategies provide guidance to the plant staff for mitigation and recovery from a severe accident. Based on current severe accident management strategies and guidelines, it is determined that the PASS provides little benefit to the plant staff in coping with an accident.

The regulatory requirements for the PASS can be eliminated without degrading the plant emergency response. The emergency response, in this sense, refers to the methodologies used in ascertaining the condition of the reactor core, mitigating the consequences of an accident, assessing and projecting offsite releases of radioactivity, and establishing protective action recommendations to be communicated to offsite authorities. The elimination of the PASS will not prevent an accident management strategy that meets the initial intent of the post-TMI–2 accident guidance through the use of the SAMGs, the emergency plan (EP), the emergency operating procedures (EOP), and site survey monitoring that support modification of emergency plan protective action recommendations (PARs).

Therefore, the elimination of PASS requirements from Technical Specifications (TS) (and other elements of the licensing bases) does not involve a significant increase in the consequences of any accident previously evaluated.

Criterion 2—The Proposed Change Does Not Create the Possibility of a New or Different Kind of Accident from any Previously Evaluated.

The elimination of PASS related requirements will not result in any failure mode not previously analyzed. The PASS was intended to allow for verification of the extent of reactor core damage and also to provide an input to offsite dose projection calculations. The PASS is not considered an accident precursor, nor does its existence or elimination have any adverse impact on the pre-accident state of the reactor core or post-accident confinement of radioisotopes within the containment building.

Therefore, this change does not create the possibility of a new or different kind of accident from any previously evaluated.

Criterion 3—The Proposed Change Does Not Involve a Significant Reduction in the Margin of Safety.

The elimination of the PASS, in light of existing plant equipment, instrumentation, procedures, and programs that provide effective mitigation of and recovery from reactor accidents, results in a neutral impact to the margin of safety. Methodologies that are not reliant on PASS are designed to provide rapid assessment of current reactor core conditions and the direction of degradation while effectively responding to the event in order to mitigate the consequences of the accident. The use of a PASS is redundant and does not provide quick recognition of core events or rapid response to events in progress. The intent of the requirements established as a result of the TMI–2 accident can be adequately met without reliance on a PASS.

Therefore, this change does not involve a significant reduction in the margin of safety.

Based upon the reasoning presented above and the previous discussion of the proposed amendment, the NRC staff proposes to determine that the requested amendment does not involve a significant hazards consideration.

Attorney for licensee: Kevin P. Gallen, Morgan, Lewis & Bockius, LLP, 1800 M Street, NW., Washington, DC 20036–5869.

NRC Section Chief: Richard J. Laufer.

AmerGen Energy Company, LLC, Docket No. 50–219, Oyster Creek Nuclear Generating Station, Ocean County, New York

Date of amendment request: December 16, 2002.

Description of amendment request: The licensee proposed to amend the Oyster Creek Nuclear Generating Station (OCNGS) Technical Specifications (TSs) regarding the safety limit minimum critical power ratio (SLMCPR) to reflect the results of cycle-specific calculations performed for the current fuel cycle (*i.e.*, Cycle 19), using Nuclear Regulatory Commission (NRC)-approved methodology for determining SLMCPR values. Specifically, the licensee proposed to revise TS 2.1.A, changing the SLMCPR from 1.12 to 1.10 for three-recirculation-loop operation, and from 1.11 to 1.09 for four-or five-recirculation-loop operation.

Basis for proposed no significant hazards consideration determination: As required by 10 CFR 50.91(a), the licensee has provided its analysis of the issue of no significant hazards consideration. The NRC staff has reviewed the licensee's analysis against the standards of 10 CFR 50.92(c). The NRC staff's analysis is presented below:

1. Does the proposed change involve a significant increase in the probability or consequences of an accident previously evaluated?

Before commencement of Cycle 19, the licensee used NRC-approved methods and procedures in Topical Report NEDE–24011–P–A–14, ''General Electric Standard Application for Reactor Fuel'' (GESTAR II) and U.S. Supplement, NEDE–24011–P–A–14–US, dated June 2000, to derive the SLMCPR values for OCNGS, Cycle 19. The revised values were approved by the NRC staff via Amendment No. 233, dated September 26, 2002. Subsequently, the licensee recalculated these SLMCPR values using the methodology in Topical Report NEDC–32694–P–A, ''Power Distribution Uncertainties for Safety Limit MCPR Evaluation,'' and requested to revise these values further by the December 16, 2002, application.

The analysis methodology incorporates cycle-specific parameters. These calculations do not change the operating procedures of OCNGS and have no effect on the probability of an accident initiating event or transient. The basis of the SLMCPR is to ensure no mechanistic fuel damage is calculated to occur if the limit is not violated. The new SLMCPR values preserve the existing margin to transition boiling and

the probability of fuel damage is not increased (*i.e.*, in the event of an accident or transient, the amount of fuel damaged would not be increased as a result of the new SLMCPR values). Furthermore, the proposed new SLMCPR values do not lead to, nor do they arise as a result of, plant design or procedural changes. Therefore, the proposed changes do not involve a significant increase in the probability or consequences of an accident previously evaluated.

2. Does the proposed change create the possibility of a new or different kind of accident from any accident previously evaluated?

The new SLMCPR values for OCNGS Cycle 19 core have been calculated in accordance with the methods and procedures described in NRC-approved topical reports. The proposed new SLMCPR values do not lead to, nor do they arise as a result of, plant design or procedural changes. The changes do not involve any new method for operating the facility and do not involve any facility modifications. As a result, no new initiating events or transients could develop from the proposed changes. Therefore, the proposed TS changes do not create the possibility of a new or different kind of accident from any accident previously evaluated.

3. Does the proposed change involve a significant reduction in a margin of safety?

The margin of safety as defined in OCNGS's licensing basis will remain the same. The new, cycle-specific SLMCPR values are calculated using NRC-approved methods and procedures that are in accordance with the current fuel design and licensing criteria. The SLMCPR values will remain high enough to ensure that greater than 99.9% of all fuel rods in the core are expected to avoid transition boiling if the limits are not violated, thereby preserving the fuel cladding integrity. Therefore, the proposed TS changes do not involve a significant reduction in a margin of safety.

Based on the above review, it appears that the three standards of 10 CFR 50.92(c) are satisfied. Therefore, the NRC staff proposes to determine that the requested amendment involves no significant hazards consideration.

Attorney for licensee: Kevin P. Gallen, Morgan, Lewis & Bockius, LLP, 1800 M Street, NW., Washington, DC 20036–5869.

NRC Section Chief: Richard J. Laufer.

Consumers Energy Company, Docket No. 50–155, Big Rock Point Nuclear Plant, Charlevoix County, Michigan

Date of amendment request: November 20, 2002.

Description of amendment request: The amendment request reflects organizational changes due to the transfer of the Palisades Plant from Consumers Energy to Nuclear Management Company. The revision reduces redundancy between the Defueled Technical Specifications (DTS) and the Big Rock Point Quality Program Description for Nuclear Power Plants. Other changes are being proposed to correct minor typographical, grammatical, and spelling errors.

Basis for proposed no significant hazards consideration determination: As required by 10 CFR 50.91(a), the licensee has provided its analysis of the issue of no significant hazards consideration, which is presented below:

1. Will the proposed change involve a significant increase in the probability or consequences of an accident previously evaluated?

Because this proposed change involves only a change in reporting relationships, and no accidents previously evaluated consider administrative controls, the change does not involve a significant increase in the probability or consequences of an accident previously considered.

2. Will the proposed change create the possibility of a new or different kind of accident [from any other accident] previously evaluated?

The proposed change would result in moving requirements for certain reporting relationships from the Defueled Technical Specifications to the Consumers Energy Quality Program Description for Nuclear Power Plants, Part 1—Big Rock Point Plant (CPC–2A). Because the Topical Report, CPC–2A, requires prior NRC [U.S. Nuclear Regulatory Commission] approval for any changes which would reduce the level of commitment in that document, an equivalent level of NRC oversight is applied to changes to CPC–2A as are applied to changes to Chapter 6 (Administrative Controls) of the Defueled Technical Specifications. Therefore, no changes in administrative controls defined in CPC–2A that might create the possibility of a new or different kind of accident previously evaluated would be permitted by the proposed change.

3. Will the proposed change involve a significant reduction in a margin of safety?

The proposed change stipulates that individuals who perform audits, surveillances and independent safety reviews will report as indicated in CPC–2A, which states that independent safety reviews are performed by the Restoration Safety Review Committee (RSRC). The proposed change involves no significant change in a margin of safety because margins of safety (in the Defueled Technical Specifications) are directly controlled by system design and operation in accordance with Limiting Conditions of Operation, Surveillances and Design Features specified in the Defueled Technical Specifications are affected by this proposed change.

To the extent that design and operation of systems having safety margins might be affected by independent oversight, the following is offered as evidence that no significant reduction in margin of safety will result from the proposed change:

- The Manager, Nuclear Performance Assessment Department (NPAD) and the RSRC both report their findings directly to the Senior Nuclear Officer; therefore there will be no change in the ultimate reporting relationship.
- The membership of NPAD and RSRC consists of individuals who are independent of the plant organization.
- Changes to the Topical Report, CPC–2A that would result in a reduction in level of commitment in the Quality Program Description require a review and approval process equivalent to proposed changes to the administrative controls specified in the Defueled Technical Specifications.
- The requirements for performing onsite and offsite reviews and audits are specified in CPC–2A; the proposed change to the DTS to place the reporting relationship for individuals performing these audits and reviews eliminates redundancy between the Defueled Technical Specifications and CPC–2A.

The NRC staff has reviewed the licensee's significant hazards analysis and, based on this review, it appears that the three standards of 10 CFR 50.92(c) are satisfied. Therefore, the NRC staff proposes to determine that the amendment request involves no significant hazards consideration.

Attorney for licensee: David A. Mikelonis, Esquire, Consumers Energy Company, 212 West Michigan Avenue, Jackson, Michigan 49201.

NRC Section Chief: Robert A. Gramm.

Dominion Nuclear Connecticut, Inc., Docket No. 50–423, Millstone Power Station, Unit No. 3, New London County, Connecticut

Date of amendment request: December 11, 2002.

Description of amendment request: The proposed amendment would revise the Technical Specifications (TS) related to N–1 loop operation. Specifically, the proposed changes would eliminate N–1 loop operation from particular sections of the TS and would make other changes that are clarifying and/or administrative in nature. In addition, the TS Bases would be revised to address the proposed changes.

Basis for proposed no significant hazards consideration determination: As required by 10 CFR 50.91(a), the licensee has provided its analysis of the issue of no significant hazards

consideration, which is presented below:

1. Involve a significant increase in the probability or consequences of an accident previously evaluated.

The proposed changes do not alter the way any structure, system, or component functions and would not alter the way [in] which the plant is operated. The proposed changes do not involve any physical plant modifications. The proposed changes incorporate existing plant operational restrictions into the facility Technical Specifications and provide for the removal of information which is not applicable to plant operation.

The proposed allowed outage times (*i.e.* the required action times for Specification 3.4.1.5) are reasonable and consistent with the existing technical specification outage times and consistent with industry guidelines, thereby ensuring affected components are restored in a timely manner. The proposed changes to surveillance requirements are also consistent with existing surveillance frequencies and focus the Technical Specifications on verifying normal plant configurations are maintained. The design basis accidents, including the uncontrolled rod withdrawal from subcritical and boron dilution events, will remain the same postulated events described in the Millstone Unit No. 3 Final Safety Analysis Report (FSAR), and the consequences of these events will not be affected.

Therefore, the proposed changes will not increase the probability or consequences of an accident previously evaluated.

2. Create the possibility of a new or different kind of accident from any accident previously evaluated.

The proposed changes do not alter the plant configuration (no new or different type of equipment will be installed) or require any new or unusual operator actions. The proposed changes do not alter the way any structure, system, or component functions and do not alter the manner in which the plant is operated. The proposed changes do not introduce any new failure modes. Therefore, the proposed changes do not create the possibility of a new or different kind of accident from any accident previously evaluated.

3. Involve a significant reduction in a margin of safety.

The proposed changes will not reduce the margin of safety since they have no impact on any accident analysis assumption. The proposed changes do not decrease the scope of equipment currently required to be OPERABLE or subject to surveillance testing, nor do the proposed changes affect any instrument setpoints or equipment safety functions. The effectiveness of Technical Specifications will be maintained since the changes will not alter the operation of any component or system, nor will the proposed changes affect any safety limits or safety system settings which are credited in a facility accident analysis. Therefore, there is no reduction in a margin of safety.

The NRC staff has reviewed the licensee's analysis and, based on this review, it appears that the three standards of 10 CFR 50.92(c) are satisfied. Therefore, the NRC staff proposes to determine that the amendment request involves no significant hazards consideration.

Attorney for licensee: Lillian M. Cuoco, Senior Nuclear Counsel, Dominion Nuclear Connecticut, Inc., Rope Ferry Road, Waterford, CT 06385.

NRC Section Chief: James W. Clifford.

Duke Energy Corporation, Docket Nos. 50–269, 50–270, and 50–287, Oconee Nuclear Station, Units 1, 2, and 3, Oconee County, South Carolina

Date of amendment request: December 4, 2002.

Description of amendment request: The amendments revise Technical Specification 3.7.6 by changing the minimum combined inventory for Emergency Feedwater from 72,000 gallons to 155,000 gallons and eliminating the condensate storage tank as a source of this inventory.

Basis for proposed no significant hazards consideration determination: As required by 10 CFR 50.91(a), the licensee has provided its analysis of the issue of no significant hazards consideration, which is presented below:

Pursuant to 10 CFR 50.91, Duke Power Company (Duke) has made the determination that this amendment request involves a No Significant Hazards Consideration by applying the standards established by the NRC regulations in 10 CFR 50.92. This ensures that operation of the facility in accordance with the proposed amendment would not:

(1) Involve a significant increase in the probability or consequences of an accident previously evaluated:

No. This revision to Technical Specification (TS) 3.7.6 changes the inventory requirements for the Upper Surge Tank (UST) and hotwell. These components provide a suction source to the Emergency Feedwater System (EFW). This increase in inventory from 72,000 gallons to 155,000 gallons increases the required available inventory. This increase in inventory does not affect the probability or consequences of any previously evaluated accident.

(2) Create the possibility of a new or different kind of accident from any kind of accident previously evaluated:

No. This revision to the combined UST and hotwell inventory increases the required amount of water available to the EFW system. No new or different kind of accident is created by this change as only the required inventory is revised.

(3) Involve a significant reduction in a margin of safety:

No. The increase in required UST and hotwell inventory does not reduce the margin of safety. The increase provides the required inventory to ensure that the EFW can provide a Reactor Coolant System cooldown at a rate of 50° F/hour to decay heat removal entry conditions following a reactor trip.

Duke has concluded, based on the above, that there is no significant hazards considerations involved in this amendment request.

The NRC staff has reviewed the licensee's analysis and, based on this review, it appears that the three standards of 10 CFR 50.92(c) are satisfied. Therefore, the NRC staff proposes to determine that the amendment request involves no significant hazards consideration.

Attorney for licensee: Anne W. Cottington, Winston and Strawn, 1200 17th Street, NW., Washington, DC 20005.

NRC Section Chief: John A. Nakoski.

Entergy Nuclear Operations, Inc., Docket No. 50–293, Pilgrim Nuclear Power Station, Plymouth County, Massachusetts

Date of amendment request: May 1, 2002, as supplemented December 4, 2002.

Description of amendment request: The proposed amendment would extend the applicability of the current Pilgrim Nuclear Power Station (Pilgrim) reactor pressure vessel pressure-temperature (P–T) curves through the end of Operating Cycle (OC) 16. The current P–T curves were approved for use in License Amendment 190, dated April 13, 2001, and are limited to use through the end of OC 14. The proposed change would delete the 20 and 32 Effective Full Power Year (EFPY) curves and replace the wording of the title blocks to allow use through the end of OC 16. The proposed amendment would change Pilgrim Technical Specification Figures 3.6.1, 3.6.2 and 3.6.3.

Basis for proposed no significant hazards consideration determination: As required by 10 CFR 50.91(a), the licensee has provided its analysis of the issue of no significant hazards consideration. The NRC staff has reviewed the licensee's analysis against the standards of 10 CFR 50.92(c). The NRC staff's review is presented below:

1. Does the proposed change involve a significant increase in the probability or consequences of an accident previously evaluated?

The proposed change involves a request to extend the use of the current reactor pressure vessel P–T curves for two additional OCs. The P–T curves were generated in accordance with the fracture toughness requirements of 10 CFR Part 50, Appendix G, and American Society of Mechanical Engineers Boiler and Pressure Vessel Code (ASME Code), Section XI, Appendix G and Regulatory Guide 1.99, Revision 2, Radiation Embrittlement of Reactor Vessel Materials, and were established in

compliance with the methodology used to calculate and predict effects of radiation on embrittlement of reactor pressure vessel beltline materials. There are no physical changes to the plant or new modes of operation being introduced by the proposed change. Further, the proposed change does not involve a change to any activities or equipment and is not assumed in the safety analysis to initiate any accident sequence. The proposed change does not adversely affect the integrity of the reactor coolant pressure boundary such that its function in the containment of radioactive materials is affected. Additionally, the proposed change will not create any failure mode not bounded by previously evaluated accidents. Therefore, the proposed change does not involve a significant increase in the probability or consequences of an accident previously evaluated.

2. Does the change create the possibility of a new or different kind of accident from any accident previously evaluated?

The current P–T curves were generated in accordance with the fracture toughness requirements of 10 CFR Part 50, Appendix G, and ASME Code, Section XI, Appendix G, and were approved by the U.S. Nuclear Regulatory Commission for use through OC 14. The proposed change would extend use of the P–T curves for two additional OCs. No new modes of operation are introduced by the proposed change. Plant operation in compliance with the current P–T curves ensures conditions in which brittle fracture of primary coolant pressure boundary materials is avoided. Accidents involving a breach of the primary coolant pressure boundary have previously been evaluated and no other types of accidents associated with the proposed change have been identified. Therefore, the proposed change does not create the possibility of a new or different kind of accident from any previously evaluated.

3. Does the proposed change involve a significant reduction in a margin of safety?

The proposed curves were established in compliance with the methodology used to calculate and predict effects of radiation on embrittlement of reactor pressure vessel beltline materials and are estimated for 48 effective full-power years. The current curves are approved for use through the end of OC 14 (~19 EFPYs) which provides a conservatism factor of 1.7 between the actual EFPYs at the end of OC 14 and the end-of-life curve (32 EFPY). The change would extend the use of the proposed curves to the end of OC 16 (~23 EFPYs) which provides a conservatism factor of approximately 2.0. The actual EFPYs at the end of OC 16 is bounded by the 48 EFPYs estimated for the current curves. Therefore, the proposed change does not involve a significant reduction in a margin of safety.

The NRC staff has reviewed the licensee's analysis and, based on this review, it appears that the three standards of 50.92(c) are satisfied. Therefore, the NRC staff proposes to determine that the amendment request involves no significant hazards consideration.

Attorney for licensee: J. M. Fulton, Esquire, Assistant General Counsel, Pilgrim Nuclear Power Station, 600 Rocky Hill Road, Plymouth, Massachusetts 02360–5599.

NRC Section Chief: James W. Clifford.

Entergy Nuclear Vermont Yankee, LLC and Entergy Nuclear Operations, Inc., Docket No. 50–271, Vermont Yankee Nuclear Power Station, Vernon, Vermont

Date of amendment request: December 10, 2002

Description of amendment request: The proposed Technical Specification (TS) amendment request changes the diesel fuel specification to a more current revision in TS 4.10.C. The change would also makes administrative revisions to reflect generic position titles in TS 6.0, correct page numbers and titles in the Table on Contents, and delete the General Table of Contents. Bases pages were also revised to reflect the fuel specification revision as well as to make administrative changes to provide clarity and correct a misspelling.

Basis for proposed no significant hazards consideration determination: As required by 10 CFR 50.91(a), the licensee has provided its analysis of the issue of no significant hazards consideration which is presented below:

1. The operation of the Vermont Yankee Nuclear Power Station [VY] in accordance with the proposed amendment will not involve a significant increase in the probability or consequences of an accident previously evaluated.

VY has determined that the probability of occurrence of a previously evaluated accident is not increased because the proposed changes do not impact any accident initiating conditions. The proposed changes will have no significant impact on any safety related structures, systems or components. Additionally, the administrative changes do not affect any system operation or function.

Therefore, the proposed changes do not involve a significant increase in the probability or consequences of an accident previously evaluated.

2. The operation of Vermont Yankee Nuclear Power Station in accordance with the proposed amendment will not create the possibility of a new or different kind of accident from any accident previously evaluated.

VY has determined that the proposed changes do not involve any physical alteration of plant equipment and do not change the method by which any safety-related system performs its function. No new or different types of equipment will be installed. The proposed changes do not create any new accident initiators or involve an activity that could be an initiator of an accident of a different type.

Therefore, the proposed changes will not create the possibility of a new or different kind of accident from any accident previously evaluated.

3. The operation of Vermont Yankee Nuclear Power Station in accordance with the proposed amendment will not involve a significant reduction in a margin of safety.

VY has determined that the proposed changes do not alter the basic operation of process variables, systems, or components as described in the safety analysis. No new equipment is introduced.

The proposed changes do not impact design margins of any system to perform its intended safety functions. There is no physical or operational change being made which would alter the sequence of events, plant response, or margins in existing safety analyses. The proposed changes result in no impact on analyzed accident event precursors or effects. These proposed changes do not alter the physical design of the plant. There is no change in methods of operation.

Therefore, the proposed change does not involve a significant reduction in the margin of safety.

The NRC staff has reviewed the licensee's analysis and, based on this review, it appears that the three standards of 10 CFR 50.92(c) are satisfied. Therefore, the NRC staff proposes to determine that the amendment request involves no significant hazards consideration.

Attorney for licensee: Mr. David R. Lewis, Shaw, Pittman, Potts and Trowbridge, 2300 N Street, NW., Washington, DC 20037–1128.

NRC Section Chief: James W. Clifford.

Exelon Generation Company, LLC, Docket Nos. 50–237 and 50–249, Dresden Nuclear Power Station, Units 2 and 3, Grundy County, Illinois; Docket Nos. 50–373 and 50–374, LaSalle County Station, Units 1 and 2, LaSalle County, Illinois; Docket Nos. 50–352 and 50–353, Limerick Generating Station, Units 1 and 2 Docket Nos. 50–277 and 50–278, Peach Bottom Atomic Power Station, Units 2 and 3, York County, Pennsylvania; Docket Nos. 50–254 and 50–265, Quad Cities Nuclear Power Station, Units 1 and 2, Rock Island County, Illinois

Date of amendment request: November 27, 2002.

Description of amendment request: The proposed amendments delete requirements from the technical specifications (TS) and other elements of the licensing bases to maintain a Post Accident Sampling System (PASS). Licensees were generally required to implement PASS upgrades as described in NUREG–0737, ''Clarification of TMI [Three Mile Island] Action Plan Requirements,'' and Regulatory Guide 1.97, ''Instrumentation for Light-Water-Cooled Nuclear Power Plants to Assess Plant and Environs Conditions During and Following an Accident.'' Implementation of these upgrades was an outcome of the lessons learned from the accident that occurred at TMI Unit 2. Requirements related to PASS were imposed by Order for many facilities and were added to or included in the TS for nuclear power reactors currently licensed to operate. Lessons learned and improvements implemented over the last 20 years have shown that the information obtained from PASS can be readily obtained through other means or is of little use in the assessment and mitigation of accident conditions.

The changes are based on NRC-approved Technical Specification Task Force (TSTF) Standard Technical Specification Change Traveler, TSTF–413, ''Elimination of Requirements for a Post Accident Sampling System (PASS).'' The NRC staff issued a notice of opportunity for comment in the **Federal Register** on December 27, 2001 (66 FR 66949), on possible amendments concerning TSTF–413, including a model safety evaluation and model no significant hazards consideration (NSHC) determination, using the consolidated line item improvement process. The NRC staff subsequently issued a notice of availability of the models for referencing in license amendment applications in the **Federal Register** on March 20, 2002 (67 FR 13027). The licensee affirmed the applicability of the following NSHC determination in its application dated November 27, 2002.

Basis for proposed no significant hazards consideration determination: As required by 10 CFR 50.91(a), an analysis of the issue of no significant hazards consideration is presented below:

Criterion 1—The Proposed Change Does Not Involve a Significant Increase in the Probability or Consequences of an Accident Previously Evaluated.

The PASS was originally designed to perform many sampling and analysis functions. These functions were designed and intended to be used in post accident situations and were put into place as a result of the TMI–2 accident. The specific intent of the PASS was to provide a system that has the capability to obtain and analyze samples of plant fluids containing potentially high levels of radioactivity, without exceeding plant personnel radiation exposure limits. Analytical results of these samples would be used largely for verification purposes in aiding the plant staff in assessing the extent of core damage and subsequent offsite radiological dose projections. The system was not intended to and does not serve a function for preventing accidents and its elimination would not affect the probability of accidents previously evaluated.

In the 20 years since the TMI–2 accident and the consequential promulgation of post accident sampling requirements, operating experience has demonstrated that a PASS provides little actual benefit to post accident mitigation. Past experience has indicated that there exists in-plant instrumentation and methodologies available in lieu of a PASS for collecting and assimilating information needed to assess core damage following an accident. Furthermore, the implementation of Severe Accident Management Guidance (SAMG) emphasizes accident management strategies based on in-plant instruments. These strategies provide guidance to the plant staff for mitigation and recovery from a severe accident. Based on current severe accident management strategies and guidelines, it is determined that the PASS provides little benefit to the plant staff in coping with an accident.

The regulatory requirements for the PASS can be eliminated without degrading the plant emergency response. The emergency response, in this sense, refers to the methodologies used in ascertaining the condition of the reactor core, mitigating the consequences of an accident, assessing and projecting offsite releases of radioactivity, and establishing protective action recommendations to be communicated to offsite authorities. The elimination of the PASS will not prevent an accident management strategy that meets the initial intent of the post-TMI–2 accident guidance through the use of the SAMGs, the emergency plan (EP), the emergency operating procedures (EOP), and site survey monitoring that support modification of emergency plan protective action recommendations (PARs).

Therefore, the elimination of PASS requirements from Technical Specifications (TS) (and other elements of the licensing bases) does not involve a significant increase in the consequences of any accident previously evaluated.

Criterion 2—The Proposed Change Does Not Create the Possibility of a New or Different Kind of Accident from any Previously Evaluated.

The elimination of PASS related requirements will not result in any failure mode not previously analyzed. The PASS was intended to allow for verification of the extent of reactor core damage and also to provide an input to offsite dose projection calculations. The PASS is not considered an accident precursor, nor does its existence or elimination have any adverse impact on the pre-accident state of the reactor core or post accident confinement of radioisotopes within the containment building.

Therefore, this change does not create the possibility of a new or different kind of accident from any previously evaluated.

Criterion 3—The Proposed Change Does Not Involve a Significant Reduction in the Margin of Safety.

The elimination of the PASS, in light of existing plant equipment, instrumentation, procedures, and programs that provide effective mitigation of and recovery from reactor accidents, results in a neutral impact to the margin of safety. Methodologies that are not reliant on PASS are designed to provide rapid assessment of current reactor core conditions and the direction of degradation while effectively responding to the event in order to mitigate the consequences of the accident. The use of a PASS is redundant and does not provide quick recognition of core events or rapid response to events in progress. The intent of the requirements established as a result of the TMI–2 accident can be adequately met without reliance on a PASS.

Therefore, this change does not involve a significant reduction in the margin of safety.

The NRC staff proposes to determine that the amendment requests involve no significant hazards consideration.

Attorneys for licensees: Mr. Edward J. Cullen, Deputy General Counsel, Exelon BSC—Legal, 2301 Market Street, Philadelphia, PA 19101.

NRC Section Chiefs: Anthony J. Mendiola, James W. Clifford.

FirstEnergy Nuclear Operating Company, Docket No. 50–440, Perry Nuclear Power Plant, Unit 1, Lake County, Ohio

Date of amendment request: October 30, 2002.

Description of amendment request: The proposed amendment deletes requirements from the technical specifications (TS) and other elements of the licensing bases to maintain a Post Accident Sampling System (PASS).

Basis for proposed no significant hazards consideration determination: As required by 10 CFR 50.91(a), the licensee has provided its analysis of the issue of no significant hazards consideration which is presented below:

1. The proposed change does not involve a significant increase in the probability or consequences of an accident previously evaluated.

The PASS was originally designed to perform many sampling and analysis functions. These functions were designed and intended to be used in post accident situations, and were put into place as a result of the Three Mile Island (TMI) 2 accident. The specific intent of the PASS was to provide a system that has the capability to obtain and analyze samples of plant fluids containing potentially high levels of radioactivity, without exceeding plant personnel radiation exposure limits. Analytical results of these samples would be used largely for verification purposes in

aiding the plant staff in assessing the extent of core damage and subsequent offsite radiological dose projections. The system was not intended to and does not serve a function for preventing accidents, and its elimination would not affect the probability of accidents previously evaluated. In the 23 years since the TMI 2 accident, and the consequential promulgation of post accident sampling requirements, operating experience has demonstrated that a PASS provides little actual benefit to post accident mitigation. Past experience has indicated that there exists in-plant instrumentation and methodologies available in lieu of a PASS for collecting and assimilating information needed to assess core damage following an accident. Furthermore, the implementation of Severe Accident Management Guidance (SAMG) emphasizes accident management strategies based on in-plant instruments. These strategies provide guidance to the plant staff for mitigation and recovery from a severe accident. Based on current severe accident management strategies and guidelines, it is determined that the PASS provides little benefit to the plant staff in coping with an accident. The regulatory requirements for the PASS can be eliminated without degrading the plant emergency response. The emergency response, in this sense, refers to the methodologies used in ascertaining the condition of the reactor core, mitigating the consequences of an accident, assessing and projecting offsite releases of radioactivity, and establishing protective action recommendations to be communicated to offsite authorities. The elimination of the PASS will not prevent an accident management strategy that meets the initial intent of the post-TMI 2 accident guidance through the use of the SAMGs, the Emergency Plan, the Emergency Operating Procedures (at PNPP, these procedures are titled the Plant Emergency Instructions), and site survey monitoring that support modification of Emergency Plan Protective Action Recommendations (PARs). Therefore, the elimination of PASS requirements from Technical Specifications does not involve a significant increase in the consequences of any accident previously evaluated.

2. The proposed change would not create the possibility of a new or different kind of accident from any previously evaluated.

The elimination of PASS related requirements will not result in any failure mode not previously analyzed. The PASS was intended to allow for verification of the extent of reactor core damage and also to provide an input to offsite dose projection calculations. The PASS is not considered an accident precursor, nor does its existence or elimination have any adverse impact on the pre-accident state of the reactor core or post accident confinement of radioisotopes within the containment building. Therefore, this change does not create the possibility of a new or different kind of accident from any previously evaluated.

3. The proposed change will not involve a significant reduction in the margin of safety.

The elimination of the PASS, in light of existing plant equipment, instrumentation, procedures, and programs that provide effective mitigation of and recovery from reactor accidents, results in a neutral impact to the margin of safety. Methodologies that do not rely on PASS are designed to provide rapid assessment of current reactor core conditions and the trending of degradation while effectively responding to the event in order to mitigate the consequences of the accident. The use of a PASS is redundant and does not provide quick recognition of core events or rapid response to events in progress. The intent of the requirements established as a result of the TMI 2 accident can be adequately met without reliance on a PASS. Therefore, this change does not involve a significant reduction in the margin of safety.

Based upon the reasoning presented above and the previous discussion of the amendment request, the requested change does not involve a significant hazards consideration.

The NRC staff has reviewed the licensee's analysis and, based on this review, it appears that the three standards of 10 CFR 50.92(c) are satisfied. Therefore, the NRC staff proposes to determine that the amendment request involves no significant hazards consideration.

Attorney for licensee: Mary E. O'Reilly, Attorney, FirstEnergy Corporation, 76 South Main Street, Akron, OH 44308.

NRC Section Chief: Anthony J. Mendiola.

FPL Energy Seabrook, LLC, Docket No. 50–443, Seabrook Station, Unit No. 1, Rockingham County, New Hampshire

Date of amendment request: March 22, 2002, as supplemented May 13, June 24, July 29, and December 20, 2002.

Description of amendment request: The proposed amendment would revise Technical Specifications (TSs) Surveillance Requirement (SR) 4.0.3 to extend the delay period, before entering a Limiting Condition for Operation (LCO), following a missed surveillance. The delay period would be extended from the current limit of "* * * up to 24 hours to permit the completion of the surveillance when the allowable outage time limits of the ACTION requirements are less than 24 hours" to "* * * up to 24 hours or up to the limit of the specified Frequency, whichever is greater." In addition, the following requirement would be added to SR 4.0.3: "A risk evaluation shall be performed for any Surveillance delayed greater than 24 hours and the risk impact shall be managed."

The NRC staff issued a notice of opportunity for comment in the **Federal Register** on June 14, 2001 (66 FR 32400), on possible amendments concerning missed surveillances, including a model safety evaluation and model no significant hazards consideration (NSHC) determination, using the consolidated line item improvement process (CLIIP). The NRC staff subsequently issued a notice of availability of the models for referencing in license amendment applications in the **Federal Register** on September 28, 2001 (66 FR 49714). The licensee affirmed the applicability of the following NSHC determination in its application dated March 22, 2002, as supplemented May 13, June 24, July 29, and December 20, 2002.

The proposed amendment would also add a requirement for a TS Bases Control Program to the administrative controls section of TSs. This change is necessary to be consistent with the CLIIP and is also consistent with the TS Bases Control Program presented in Section 5.5 of NUREG–1431, Revision 2, "Standard Technical Specifications Westinghouse Plants." The licensee provided its analysis of the issue of NSHC for this proposed change in its application.

The proposed amendment would also modify SR 4.0.1, and its associated Bases, to link it with SR 4.0.3. The modification to SR 4.0.1 is consistent with NUREG–1431, Revision 2, "Standard Technical Specifications Westinghouse Plants." The licensee provided its analysis of the issue of NSHC for this proposed change in its application.

Basis for proposed no significant hazards consideration determination: As required by 10 CFR 50.91(a), an analysis of the issue of no significant hazards consideration is presented below:

Criterion 1—The Proposed Change Does Not Involve a Significant Increase in the Probability or Consequences of an Accident Previously Evaluated.

[CLIIP Change]

The proposed change relaxes the time allowed to perform a missed surveillance. The time between surveillances is not an initiator of any accident previously evaluated. Consequently, the probability of an accident previously evaluated is not significantly increased. The equipment being tested is still required to be operable and capable of performing the accident mitigation functions assumed in the accident analysis. As a result, the consequences of any accident previously evaluated are not significantly affected. Any reduction in confidence that a standby system might fail to perform its safety function due to a missed surveillance is small and would not, in the absence of other unrelated failures, lead to an increase in consequences beyond those estimated by existing analyses. The addition of a requirement to assess and manage the risk introduced by the missed surveillance will further minimize possible concerns. Therefore, this change does not involve a significant increase in the probability or

consequences of an accident previously evaluated.

[Addition of TS Bases Control Program and Changes to SR 4.0.1] The proposed changes to adopt the ITS [Improved Standard Technical Specifications] wording for Specification 4.0.1 and formally adopt a [TS] Bases Control Program are administrative in nature and do not adversely affect accident initiators or precursors nor alter the design assumptions, conditions, configuration of the facility or the manner in which it is operated. The proposed changes do not alter or prevent the ability or structures, systems, or components to perform their intended function to mitigate the consequences of an initiating event within the acceptance limits assumed in the Seabrook Station Updated Final Safety Analysis Report (UFSAR).

Future changes to the TS Bases will continue to be administratively controlled pursuant to the provisions of 10 CFR 50.59. The TS Bases is a licensee-controlled document that contains bases information for the [TS]. Future changes to the information contained in the TS Bases will be reviewed and approved in accordance with the FPLE Seabrook Regulatory Compliance Manual and TS Section 6.7.6j (TS Bases Control Program) of the Seabrook Station [TS]. Therefore, the proposed change does not involve a significant increase in the probability or consequences of an accident previously evaluated.

Criterion 2—The Proposed Change Does Not Create the Possibility of a New or Different Kind of Accident From Any Previously Evaluated.

[CLIIP Change]

The proposed change does not involve a physical alteration of the plant (no new or different type of equipment will be installed) or a change in the methods governing normal plant operation. A missed surveillance will not, in and of itself, introduce new failure modes or effects and any increased chance that a standby system might fail to perform its safety function due to a missed surveillance would not, in the absence of other unrelated failures, lead to an accident beyond those previously evaluated. The addition of a requirement to assess and manage the risk introduced by the missed surveillance will further minimize possible concerns. Thus, this change does not create the possibility of a new or different kind of accident from any accident previously evaluated.

[Addition of TS Bases Control Program and Changes to SR 4.0.1]

The proposed changes do not alter the design assumptions, conditions, or configuration of the facility or the manner in which the plant is operated. There are no changes to the source term or radiological release assumptions used in evaluating the radiological consequences in the Seabrook Station UFSAR. The proposed changes have no adverse impact on component or system interactions. The proposed changes will not adversely degrade the ability of systems, structures and components important to safety to perform their safety function nor change the response of any system, structure or component important to safety as described in the UFSAR. The proposed changes are administrative in nature and do not change the level of programmatic and procedural details of assuring operation of the facility in a safe manner. Since there are no changes to the design assumptions, conditions, configuration of the facility, or the manner in which the plant is operated and surveilled, the proposed changes do not create the possibility of a new or different kind of accident from any previously analyzed.

Criterion 3—The Proposed Change Does Not Involve a Significant Reduction in the Margin of Safety.

[CLIIP Change]

The extended time allowed to perform a missed surveillance does not result in a significant reduction in the margin of safety. As supported by the historical data, the likely outcome of any surveillance is verification that the LCO is met. Failure to perform a surveillance within the prescribed frequency does not cause equipment to become inoperable. The only effect of the additional time allowed to perform a missed surveillance on the margin of safety is the extension of the time until inoperable equipment is discovered to be inoperable by the missed surveillance. However, given the rare occurrence of inoperable equipment, and the rare occurrence of a missed surveillance, a missed surveillance on inoperable equipment would be very unlikely. This must be balanced against the real risk of manipulating the plant equipment or condition to perform the missed surveillance. In addition, parallel trains and alternate equipment are typically available to perform the safety function of the equipment not tested. Thus, there is confidence that the equipment can perform its assumed safety function.

Therefore, this change does not involve a significant reduction in a margin of safety.

Based upon the reasoning presented above and the previous discussion of the amendment request, the requested change does not involve a significant hazards consideration.

[Addition of TS Bases Control Program and Changes to SR 4.0.1]

There is no adverse impact on equipment design or operation and there are no changes being made to the [TS] required safety limits or safety system settings that would adversely affect plant safety. The proposed changes are administrative in nature and do not reduce the level of programmatic or procedural controls associated with the activities presently performed via the aforementioned surveillance requirements.

Future changes to the TS Bases information will be reviewed and approved in accordance with Seabrook Station [TS], Section 6.7, and as outlined in [FPLE Seabrook's] Regulatory Compliance programs. Specifically, changes to the Seabrook Station [TS] Bases require an evaluation pursuant to the provisions of 10 CFR 50.59 and review and approval by the Station Operation Review Committee (SORC) prior to implementation.

Therefore, formal adoption of a TS-required TS Bases Control Program and adoption of ITS wording for Specification 4.0.1 do not involve a significant reduction in the margin of safety provided in the existing specifications.

Based on this review, it appears that the three standards of 10 CFR 50.92(c) are satisfied. Therefore, the NRC staff proposes to determine that the amendment request involves NSHC.

Attorney for licensee: M. S. Ross, Florida Power & Light Company, P.O. Box 14000, Juno Beach, FL 33408–0420.

NRC Section Chief: James W. Clifford.

Indiana Michigan Power Company, Docket No. 50–316, Donald C. Cook Nuclear Plant, Unit 2, Berrien County, Michigan

Date of amendment request: November 15, 2002.

Description of amendment request: The proposed amendment would revise the Donald C. Cook Nuclear Plant, Unit 2, operating license and Technical Specifications to increase the licensed power level to 3468 Mega Watts Thermal (MWt), or 1.66 percent greater than the current level of 3411 MWt.

Basis for proposed no significant hazards consideration determination: As required by 10 CFR 50.91(a), the licensee has provided its analysis of the issue of no significant hazards consideration, which is presented below:

1. Does the proposed change involve a significant increase in the probability of occurrence or consequences of an accident previously evaluated?

Response: No.

Probability of Occurrence of an Accident Previously Evaluated—In support of this Measurement Uncertainty Recapture (MUR) power uprate, a comprehensive evaluation was performed for nuclear steam supply system (NSSS) and balance of plant systems and components and analyses that could be affected by this change. A power calorimetric uncertainty calculation was performed, and the effect of increasing plant power by 1.66 percent on the plant's design and licensing basis was evaluated. The result of these evaluations is that all plant components will continue to be capable of performing their design function at an uprated core power of 3468 MWt. In addition, an evaluation of the accident analyses demonstrates that applicable analysis acceptance criteria continue to be met. No accident initiators are affected by this uprate and no challenges to any plant safety barriers are created by this change.

Consequences of an Accident Previously Evaluated—This change does not affect the release paths, the frequency of release, or the source term for release for any accidents previously evaluated in the Updated Final Safety Analysis Report. Structures, systems, and components (SSC) required to mitigate transients remain capable of performing their design functions, and thus were found acceptable. The reduced uncertainty in the feedwater flow input to the power

calorimetric measurement ensures that applicable accident analyses acceptance criteria continue to be met, to support operation at a core power of 3468 MWt. Analyses performed to assess the effects of mass and energy remain valid. The source terms used to assess radiological consequences have been reviewed and determined to bound operation at the uprated condition.

Therefore, the proposed change does not involve a significant increase in the probability or consequences of an accident previously evaluated.

2. Does the proposed change create the possibility of a new or different kind of accident from any accident previously evaluated?

Response: No.

No new accident scenarios, failure mechanisms, or single failures are introduced as a result of the proposed changes. The installation of the Caldon Leading Edge Flow Meter CheckPlus™ system has been analyzed, and failures of this system will have no adverse effect on any safety-related system or any SSCs required for transient mitigation. SSCs previously required for the mitigation of a transient remain capable of fulfilling their intended design functions. The proposed changes have no adverse effects on any safety-related system or component and do not challenge the performance or integrity of any safety-related system.

This change does not adversely affect any current system interfaces or create any new interfaces that could result in an accident or malfunction of a different kind than previously evaluated. Operating at a core power level of 3468 MWt does not create any new accident initiators or precursors. The reduced uncertainty in the feedwater flow input to the power calorimetric measurement ensures that applicable accident analyses acceptance criteria continue to be met, to support operation at a core power of 3468 MWt. Credible malfunctions continue to be bounded by the current accident analysis of record or evaluations that demonstrate that applicable acceptance criteria continue to be met.

Therefore, the proposed changes do not create the possibility of a new or different kind of accident from any previously evaluated.

3. Does the proposed change involve a significant reduction in a margin of safety?

Response: No.

The margins of safety associated with this MUR Uprate Program are those pertaining to core power. This includes those associated with the fuel cladding, Reactor Coolant System pressure boundary, and containment barriers. A comprehensive engineering review was performed to evaluate the 1.66 percent increase in the licensed core power from 3411 MWt to 3468 MWt. The 1.66 percent increase required that revised NSSS design thermal and hydraulic parameters be established, which then served as the basis for all of the NSSS analyses and evaluations. This engineering review concluded that no design transient modifications are required to accommodate the revised NSSS design conditions. NSSS systems and components were evaluated and it was concluded that the NSSS equipment has sufficient margin to accommodate the 1.66 percent power uprate. NSSS accident analyses were evaluated for the 1.66 percent power uprate. In all cases, the evaluations demonstrate that the applicable analyses acceptance criteria continue to be met. As such, the margins of safety continue to be bounded by the current analyses of record for this change.

Therefore, the proposed change does not involve a significant reduction in a margin of safety.

In summary, based upon the above evaluation, [Indiana Michigan Power Company] has concluded that the proposed amendment involves no significant hazards consideration under the standards set forth in 10 CFR 50.92(c), and, accordingly, a finding of ''no significant hazards consideration'' is justified.

The NRC staff has reviewed the licensee's analysis and, based on this review, it appears that the three standards of 10 CFR 50.92(c) are satisfied. Therefore, the NRC staff proposes to determine that the amendment requests involve no significant hazards consideration.

Attorney for licensee: David W. Jenkins, Esq., 500 Circle Drive, Buchanan, MI 49107.

NRC Section Chief: L. Raghavan.

Nine Mile Point Nuclear Station, LLC (NMPNS), Docket No. 50–220, Nine Mile Point Nuclear Station Unit No. 1, Oswego County, New York

Date of amendment request: December 19, 2002.

Description of amendment request: The proposed amendment would update and clarify the Technical Specifications (TSs) requirements for demonstrating shutdown margin (SDM). The proposed changes incorporate new, more restrictive, SDM limits; add the required limiting condition for operation (LCO) actions if the SDM is not met; and also add the surveillance requirements for verifying the SDM. These LCO actions and surveillance requirements are not currently specified in the TSs. The revised SDM limits account for the uncertainty in the demonstration of adequate SDM analytically or by measurement. The proposed changes also eliminate the unnecessary restriction requiring SDM demonstration in the cold shutdown condition. The option for SDM demonstration in the cold shutdown condition is retained consistent with the existing special test exception.

Basis for proposed no significant hazards consideration determination: As required by 10 CFR 50.91(a), the licensee has provided its analysis of the issue of no significant hazards consideration, which is presented below:

1. Does the proposed change involve a significant increase in the probability or consequences of an accident previously evaluated?

Response: No.

Adequate SDM provides assurance that inadvertent criticalit[y] and potential control rod drop accidents (CRDAs) involving high worth control rods will not cause significant fuel damage. The SDM is not an accident initiator and, as such, will have no effect on the probability of an accident. The proposed changes incorporate more restrictive SDM limits and provide the necessary actions and verifications to assure that there will be no adverse effect on the initial conditions and assumptions of the accidents previously evaluated in the Updated Final Safety Analysis Report (UFSAR). The proposed changes do not involve physical changes to the plant or introduce any new modes of operation. Accordingly, continued assurance is provided that the process variables, structures, systems, and components are maintained such that there will be no degradation of any fission product barrier which could increase the radiological consequences of an accident. Therefore, the proposed changes do not involve a significant increase in the probability or consequences of an accident previously evaluated.

2. Does the proposed change create the possibility of a new or different kind of accident from any accident previously evaluated?

Response: No.

The proposed changes to the SDM limits and requirements will have no adverse effect on the design or assumed accident performance of any structure, system, or component, or introduce any new modes of system operation or failure modes. Moreover, the proposed changes will have no impact on conformance to 10 CFR [Code of Federal Regulations] 50, Appendix A, General Design Criterion 26 (GDC 26), in that the control rods will continue to satisfy the SDM requirements and provide assurance that the reactor can be made subcritical from all applicable operating conditions, transients, and design basis events. Therefore, the proposed changes do not create the possibility of a new or different kind of accident from any accident previously evaluated.

3. Does the proposed change involve a significant reduction in a margin of safety?

Response: No.

The proposed changes provide separate SDM limits for testing consistent with the Improved Standard Technical Specifications (NUREG–1433 and NUREG–1434) where the highest worth control rod is determined analytically (0.38% Dk/k) or by measurement (0.28% Dk/k). The proposed SDM limits are more restrictive than the current limit (0.25% Dk/k) and account for the uncertainty in the demonstration of SDM by testing. The SDM will continue to account for changes in core reactivity during the fuel cycle. Therefore, the margin of safety is increased relative to the SDM assumptions for the control rod withdrawal error transient and CRDA analyses.

Accordingly, the proposed changes do not involve a significant reduction in a margin of safety.

The NRC staff has reviewed the licensee's analysis and, based on this review, it appears that the three standards of 10 CFR 50.92(c) are satisfied. Therefore, the NRC staff proposes to determine that the amendment request involves no significant hazards consideration.

Attorney for licensee: Mark J. Wetterhahn, Esquire, Winston & Strawn, 1400 L Street, NW., Washington, DC 20005–3502.

NRC Section Chief: Richard J. Laufer.

Nuclear Management Company, LLC, Docket No. 50–305, Kewaunee Nuclear Power Plant, Kewaunee County, Wisconsin

Date of amendment request: December 19, 2002.

Description of amendment request: The proposed amendment would revise the Kewaunee Nuclear Power Plant (KNPP) Technical Specifications (TS) reporting requirements for the discovery of defective or degraded steam generator tubes.

Basis for proposed no significant hazards consideration determination: As required by 10 CFR 50.91(a), the licensee has provided its analysis of the issue of no significant hazards consideration, which is presented below:

1. Does the proposed amendment involve a significant increase in the probability or consequences of an accident previously evaluated?

Response: No.

The proposed changes do not have any effect on structures, systems, and components (SSCs) of the Kewaunee Nuclear Power Plant. The changes do not affect plant operations, any design function or an analysis that verifies the capability of an SSC to perform a design function. The changes do not change any previously evaluated accidents in the updated safety analysis report (UFSAR). As these changes are administrative, there is no increase in the probability and consequences of analyzed accidents.

Therefore, the proposed changes do not involve a significant increase in the probability or consequences of an accident previously evaluated.

2. Does the proposed amendment create the possibility of a new or different kind of accident from any accident previously evaluated?

Response: No.

The proposed changes are administrative and do not change the design function or operation of any plant SSCs. The proposed changes do not create the possibility of a new or different kind of accident due to credible new failure mechanisms, malfunctions, or accident initiators not considered in the design and licensing bases.

Therefore, the proposed changes do not create the possibility of a new or different kind of accident from any previously evaluated.

3. Does the proposed amendment involve a significant reduction in a margin of safety?

Response: No.

The proposed changes modify NRC reporting requirements only. The changes do not exceed or alter a design basis or safety limit or significantly reduce the margin of safety.

Therefore, the proposed changes do not create the possibility of a new or different kind of accident from any previously evaluated.

The NRC staff has reviewed the licensee's analysis and, based on this review, it appears that the three standards of 10 CFR 50.92(c) are satisfied. Therefore, the NRC staff proposes to determine that the amendment request involves no significant hazards consideration.

Attorney for licensee: John H. O'Neill, Jr., Esq., Shaw Pittman, Potts & Trowbridge, 2300 N. Street, NW, Washington, DC 20037–1128.

NRC Section Chief: L. Raghavan.

Southern Nuclear Operating Company, Inc., Georgia Power Company, Oglethorpe Power Corporation, Municipal Electric Authority of Georgia, City of Dalton, Georgia, Docket No. 50–366, Edwin I. Hatch Nuclear Plant, Unit 2, Appling County, Georgia

Date of amendment request: December 4, 2002.

Description of amendment request: The proposed amendment changes the Hatch Unit 2 turbine building high temperature primary containment isolation value specified in Technical Specification Table 3.3.6.1–1, Item 1f.

Basis for proposed no significant hazards consideration determination: As required by 10 CFR 50.91(a), the licensee has provided its analysis of the issue of no significant hazards consideration, which is presented below:

1. [Does] the [* * *] proposed [* * *] change involve a significant increase in the probability or consequences of an accident previously evaluated[?]

This TS [Technical Specification] revision request changes the allowable value for the turbine building high temperature primary containment isolation. The setpoint at which the isolation occurs has nothing to do with preventing a system break; therefore, this proposed change will not change the probability of occurrence of a small primary coolant system break.

For the turbine building high temperature primary containment isolation, the analytical limit has been calculated at 207°F with the allowable value at 200°F. The calculation supporting these values accounts for instrument uncertainties thus confirming that adequate margin exists between the allowable value and the analytical limit. Accordingly, the consequences of a small primary system break are not significantly increased.

2. [Does] the [* * *] proposed [* * *] change create the possibility of a new or different kind of accident from any previously evaluated[?]

Changing an allowable value does not introduce any new operating modes for any plant system or piece of equipment. All plant systems will continue to be operated, tested and maintained as before, and within their licensing and design basis. As a result, no new failure modes are introduced and the possibility of a new or different type of accident is not created.

3. [Does] the [* * *] proposed [* * *] change involve a significant decrease in the margin of safety[?]

Increasing the allowable value by 6°F does not result in a significant reduction in a margin of safety. A formal calculation was performed which justified an analytical limit of 207°F. This calculation determined the analytical limit based on a primary leak into the turbine building and confirmed that the allowable value adequately protects the analytical limit. As a result, the margin of safety is not significantly reduced.

The NRC staff has reviewed the licensee's analysis and, based on this review, it appears that the three standards of 10 CFR 50.92(c) are satisfied. Therefore, the NRC staff proposes to determine that the amendment request involves no significant hazards consideration.

Attorney for licensee: Ernest L. Blake, Jr., Esquire, Shaw, Pittman, Potts and Trowbridge, 2300 N Street, NW., Washington, DC 20037.

NRC Section Chief: John A. Nakoski.

Notice of Issuance of Amendments to Facility Operating Licenses

During the period since publication of the last biweekly notice, the Commission has issued the following amendments. The Commission has determined for each of these amendments that the application complies with the standards and requirements of the Atomic Energy Act of 1954, as amended (the Act), and the Commission's rules and regulations. The Commission has made appropriate findings as required by the Act and the Commission's rules and regulations in 10 CFR Chapter I, which are set forth in the license amendment.

Notice of Consideration of Issuance of Amendment to Facility Operating License, Proposed No Significant Hazards Consideration Determination, and Opportunity for A Hearing in connection with these actions was published in the **Federal Register** as indicated.

Unless otherwise indicated, the Commission has determined that these

amendments satisfy the criteria for categorical exclusion in accordance with 10 CFR 51.22. Therefore, pursuant to 10 CFR 51.22(b), no environmental impact statement or environmental assessment need be prepared for these amendments. If the Commission has prepared an environmental assessment under the special circumstances provision in 10 CFR 51.12(b) and has made a determination based on that assessment, it is so indicated.

For further details with respect to the action see (1) the applications for amendment, (2) the amendment, and (3) the Commission's related letter, Safety Evaluation and/or Environmental Assessment as indicated. All of these items are available for public inspection at the Commission's Public Document Room, located at One White Flint North, 11555 Rockville Pike (first floor), Rockville, Maryland. Publicly available records will be accessible from the Agencywide Documents Access and Management Systems (ADAMS) Public Electronic Reading Room on the internet at the NRC web site, *http://www.nrc.gov/reading-rm/adams.html*. If you do not have access to ADAMS or if there are problems in accessing the documents located in ADAMS, contact the NRC Public Document Room (PDR) Reference staff at 1–800–397–4209, 301–415–4737 or by email to *pdr@nrc.gov*.

Dominion Nuclear Connecticut, Inc. Docket Nos. 50–336 and 50–423, Millstone Power Station, Unit Nos. 2 and 3, New London County, Connecticut

Date of application for amendment: February 14, 2002, as supplemented on September 9, 2002.

Brief description of amendment: The amendments revised the Millstone Power Station, Unit No. 2 (MP2) and 3 (MP3) Technical Specifications (TSs) by relocating selected MP2 and MP3 TSs related to the Reactor Coolant System and Plant Systems to the respective unit's Technical Requirements Manual.

The amendment does not address changes to MP2 TS 3/4.7.10, ''Snubbers,'' and MP3 TSs 3/4.7.10, ''Snubbers,'' and 3/4.7.14, ''Area Temperature Monitoring,'' as described by the application dated February 14, 2002, because these proposed TSs changes were withdrawn by the supplement dated September 9, 2002.

Date of issuance: January 2, 2003.

Effective date: As of the date of issuance and shall be implemented within 90 days from the date of issuance.

Amendment Nos.: 272 and 214.

Facility Operating License Nos. DPR–65 and NPF–49: This amendment revised the TSs.

Date of initial notice in ***Federal Register:*** April 16, 2002 (67 FR18645). The September 9, 2002, letter provided clarifying information that did not change the initial proposed no significant hazards consideration determination or expand the amendment beyond the scope of the initial notice.

The Commission's related evaluation of the amendment is contained in a Safety Evaluation dated January 2, 2003.

No significant hazards consideration comments received: No.

Duke Energy Corporation, et al., Docket Nos. 50–413 and 50–414, Catawba Nuclear Station, Units 1 and 2, York County, South Carolina

Date of application for amendments: September 12, 2002, as supplemented by letter dated December 30, 2002.

Brief description of amendments: The amendments temporarily revised Technical Specifications (TS) 3.5.2, ''Emergency Core Cooling System;'' TS 3.6.6, ''Containment Spray System;'' TS 3.7.5, ''Auxiliary Feedwater System;'' TS 3.7.7, ''Component Cooling Water System;'' TS 3.7.8, ''Nuclear Service Water System;'' and TS 3.8.1, ''AC Sources.''

Date of issuance: January 7, 2003.

Effective date: As of the date of issuance and shall be implemented within 30 days from the date of issuance.

Amendment Nos.: 203 & 196.

Facility Operating License Nos. NPF–35 and NPF–52: Amendments revised the Technical Specifications.

Date of initial notice in ***Federal Register:*** October 15, 2002 (67 FR 63692). The supplement dated December 30, 2002, provided clarifying information that did not change the scope of the September 12, 2002, application, nor the initial no significant hazard consideration determination.

The Commission's related evaluation of the amendments is contained in a Safety Evaluation dated January 7, 2003.

No significant hazards consideration comments received: No

Duke Energy Corporation, et al., Docket Nos. 50–413 and 50–414, Catawba Nuclear Station, Units 1 and 2, York County, South Carolina

Date of application for amendments: August 29, 2002. *Brief description of amendments:* The amendments revise Technical Specification (TS) 3.8.4.7, to modify the note to eliminate the ''once per 60 months'' restriction on replacing the battery service test by the battery modified performance discharge test.

Date of issuance: January 9, 2003.

Effective date: As of the date of issuance and shall be implemented within 30 days from the date of issuance.

Amendment Nos.: 204 & 197.

Facility Operating License Nos. NPF–35 and NPF–52: Amendments revised the Technical Specifications.

Date of initial notice in ***Federal Register:*** November 12, 2002 (67 FR 68733). The Commission's related evaluation of the amendments is contained in a Safety Evaluation dated January 9, 2003.

No significant hazards consideration comments received: No.

Energy Northwest, Docket No. 50–397, Columbia Generating Station, Benton County, Washington

Date of application for amendment: October 22, 2002.

Brief description of amendment: The amendment deletes a reference to Section 2.E in Section 2.F of Facility Operating License No. NPF–21. Section 2.E requires the licensee to fully implement and maintain in effect all provisions of the Commission-approved physical security, guard training and qualification, and safeguards contingency plans. Section 2.E is redundant because the reporting requirements and criteria for the physical security programs are specified in 10 CFR 73.71 and Appendix G of 10 CFR Part 73.

Date of issuance: January 9, 2003.

Effective date: January 9, 2003 to be implemented within 60 days from the date of issuance.

Amendment No.: 183.

Facility Operating License No. NPF–21: The amendment revised the operating license.

Date of initial notice in ***Federal Register:*** December 10, 2002 (67 FR 75871). The Commission's related evaluation of the amendment is contained in a Safety Evaluation dated January 9, 2003.

No significant hazards consideration comments received: No.

Entergy Gulf States, Inc., and Entergy Operations, Inc., Docket No. 50–458, River Bend Station, Unit 1, West Feliciana Parish, Louisiana

Date of amendment request: August 21, 2002.

Brief description of amendment: The amendment revises Surveillance Requirement (SR) 3.0.3 to extend the delay period, before entering a Limiting Condition for Operation, following a missed surveillance. The delay period is extended from the current limit of ''* * * up to 24 hours or up to the limit of the specified Frequency, whichever is less'' to ''* * * up to 24 hours or up to the limit of the specified Frequency,

whichever is greater.'' In addition, the following requirement is added to SR 3.0.3: ''A risk evaluation shall be performed for any surveillance delayed greater than 24 hours and the risk impact shall be managed.''

Date of issuance: January 2, 2003.

Effective date: As of the date of issuance and shall be implemented 60 days from the date of issuance.

Amendment No.: 127.

Facility Operating License No. NPF–47: The amendment revised the Technical Specifications.

Date of initial notice in **Federal Register:** October 1, 2002 (67 FR 61679). The Commission's related evaluation of the amendment is contained in a Safety Evaluation dated January 2, 2003.

No significant hazards consideration comments received: No.

Entergy Operations, Inc., Docket No. 50–382, Waterford Steam Electric Station, Unit 3, St. Charles Parish, Louisiana

Date of amendment request October 15, 2001, as supplemented by letter dated August 27, 2002.

Brief description of amendment: The amendment provides additional information to support a modification to Technical Specification 3.4.7 and limits Reactor Coolant System activity permitted by the ACTION statement to 60 microcuries per gram at all power levels. The letdown line break accident analysis in the Final Safety Analysis Report was also changed.

Date of issuance: January 8, 2003.

Effective date: As of the date of issuance and shall be implemented 60 days from the date of issuance.

Amendment No.: 184.

Facility Operating License No. NPF–38: The amendment revised the Technical Specifications and Final Safety Analysis Report.

Date of initial notice in ***Federal Register:*** October 28, 2002 (67 FR 66009). The August 27, 2002, supplemental letter provided additional information and revised the no significant hazards consideration determination. The original **Federal Register** notice was published on November 28, 2001 (66 FR 56504), but was superceded by the October 28, 2002 publication.

The Commission's related evaluation of the amendment is contained in a Safety Evaluation dated January 8, 2003.

No significant hazards consideration comments received: No.

Exelon Generation Company, LLC, Docket Nos. 50–352 and 50–353, Limerick Generating Station, Units 1 and 2, Montgomery County, Pennsylvania

Date of application for amendments: June 26, 2002, as supplemented September 12, 2002.

Brief description of amendments: Extend the use of the pressure-temperature limits in Technical Specification Figure 3.4.6.1–1 to 32 effective full power years.

Date of issuance: As of date of issuance and shall be implemented within 30 days.

Effective date: January 2, 2003.

Amendment Nos. 163 and 125.

Facility Operating License Nos. NPF–39 and NPF–85. The amendments revised the Technical Specifications.

Date of initial notice in ***Federal Register:*** August 6, 2002 (67 FR 50953). The supplement dated September 12, 2002, provided additional information that clarified the application, did not expand the scope of the application as originally noticed, and did not change the staff's original proposed no significant hazards consideration determination.

The Commission's related evaluation of the amendments is contained in a Safety Evaluation dated January 2, 2003.

No significant hazards consideration comments received: No.

Exelon Generation Company, LLC, Docket No. 50–171, Peach Bottom Atomic Power Station, Unit 1, York County, Pennsylvania

Date of application for amendment: May 21, 2002.

Brief description of amendment: This proposed amendment will revise the Peach Bottom Atomic Power Station, Unit 1, License and Technical Specifications (TS) to: (1) Delete License Condition C(4) to reflect satisfaction of the minimum decommissioning trust fund amount at the time of transfer of the Facility Operating License; (2) revise License Condition C(5)(d) to reflect 30 days prior written notification to the Director of Nuclear Material Safety and Safeguards before modification of the decommissioning trust agreement in any material respect; (3) delete TS 2.1(B)3 and TS 2.4(b) to eliminate inconsistencies with reporting requirements in 10 CFR 20.2202, 50.73, and 73.71; (4) revise TS 2.2 to refer to the Facility Operating License; and (5) revise TS 2.3 to refer to the radiological hazards associated with the facility.

Date of Issuance: December 26, 2002.

Effective Date: On the date of issuance of this amendment and must be fully implemented no later than 30 days from the date of issuance.

Amendment No.: 11.

Facility Operating License No. DPR–12: Amendment revised the License and TS with respect to administrative procedures or requirements.

Date of initial notice in ***Federal Register:*** October 1, 2002 (67 FR 61682). The Commission's related evaluation of the amendment is contained in a Safety Evaluation dated December 26, 2002.

No significant hazards consideration comments received: No.

PPL Susquehanna, LLC, Docket Nos. 50–387 and 50–388, Susquehanna Steam Electric Station, Units 1 and 2, Luzerne County, Pennsylvania

Date of application for amendments: June 1, 2001, as supplemented by letters dated June 13, 2001, May 20, 2002, and June 28, 2002.

Brief description of amendments: These amendments revised TS 3.7.1, ''Residual Heat Removal Service Water (RHRSW) System and Ultimate Heat Sink (UHS),'' to add operability requirements and surveillance requirements for the UHS spray bypass and large array valves, and reduce the allowed Completion Times for the conditions applicable to the RHRSW system.

Date of issuance: December 30, 2002.

Effective date: As of the date of issuance and shall be implemented within 30 days.

Amendment Nos.: 206 and 180.

Facility Operating License Nos. NPF–14 and NPF–22: The amendments revised the Technical Specifications.

Date of initial notice in ***Federal Register:*** September 5, 2001 (66 FR 46481). The June 13, 2001, May 20, 2002, and June 28, 2002, letters provided additional information that clarified the application, but did not expand the scope of the application as originally noticed, and did not change the staff's original proposed no significant hazards consideration determination.

The Commission's related evaluation of the amendments is contained in a Safety Evaluation dated December 30, 2002.

No significant hazards consideration comments received: No.

STP Nuclear Operating Company, Docket Nos. 50–498 and 50–499, South Texas Project, Units 1 and 2, Matagorda County, Texas

Date of amendment request: December 3, 2001, as supplemented by letter dated August 29, 2002.

Brief description of amendments: The amendments revise TS 3.7.1.2,

''Auxiliary Feedwater System,'' to better reflect the four train auxiliary feedwater (AFW) system design at STP. Specifically, the changes specify the same allowed outage time (AOT) for any one inoperable motor-driven pump, regardless of train. The amendments also extend the AOT for one inoperable motor-driven pump from 72 hours to 28 days. A sentence has also been added to Action d. stating that Limiting Condition for Operation (LCO) 3.0.3 and all other LCO actions requiring Mode changes are suspended until one of the four inoperable AFW pumps is restored to operable status. There is also an administrative change in the wording of the LCO to clarify that there are only four AFW pumps in each STP unit.

Date of issuance: December 31, 2002.

Effective date: December 31, 2002.

Amendment Nos.: Unit 1—146; Unit 2—134.

Facility Operating License Nos. NPF–76 and NPF–80: The amendments revised the Technical Specifications.

Date of initial notice in ***Federal Register:*** January 22, 2002 (67 FR 2930). The supplement provided additional information that clarified the application, did not expand the scope as originally noticed, and did not change the staff's original proposed no significant hazards consideration determination.

The Commission's related evaluation of the amendments is contained in a Safety Evaluation dated December 31, 2002.

No significant hazards consideration comments received: No.

TXU Generation Company LP, Docket Nos. 50–445 and 50–446, Comanche Peak Steam Electric Station, Unit Nos. 1 and 2, Somervell County, Texas

Date of amendment request: April 8, 2002.

Brief description of amendments: The amendments revise Technical Specification (TS) 3.4.16, ''RCS [Reactor Coolant System] Specific Activity,'' to lower the Limiting Condition For Operation and associated Surveillance Requirements for Dose Equivalent Iodine-131 in the RCS from a specific activity of 1.0 μCi/gm to 0.45 μCi/gm.

Date of issuance: January 6, 2003.

Effective date: As of the date of issuance and shall be implemented within 60 days from the date of issuance.

Amendment Nos.: 102 and 102.

Facility Operating License Nos. NPF–87 and NPF–89: The amendments revised the Technical Specifications.

Date of initial notice in ***Federal Register:*** June 11, 2002 (67 FR 40026). The Commission's related evaluation of the amendments is contained in a Safety Evaluation dated January 6, 2003.

No significant hazards consideration comments received: No.

Virginia Electric and Power Company, Docket No. 50–338, North Anna Power Station, Unit 1, Louisa County, Virginia

Date of application for amendment: December 7, 2001, as supplemented by letters dated June 28 and July 25, 2002.

Brief description of amendment: This amendment permits a one-time extension of the current 10-year Title 10 of the Code of Federal Regulations Part 50, Appendix J, Option B, Type A test interval from April 3, 2003, to April 2, 2008.

Date of issuance: December 31, 2002.

Effective date: As of the date of issuance and shall be implemented within 30 days from the date of issuance.

Amendment No.: 234.

Facility Operating License No. NPF–4: Amendment changes the Technical Specifications.

Date of initial notice in ***Federal Register:*** April 30, 2002 (67 FR 21295). The supplemental letters dated June 28 and July 25, 2002, contained clarifying information only and did not change the proposed no significant hazards consideration determination or expand the scope of the initial application.

The Commission's related evaluation of the amendments is contained in a Safety Evaluation dated December 31, 2002.

No significant hazards consideration comments received: No.

For the Nuclear Regulatory Commission.

Dated at Rockville, Maryland, this 13th day of January 2003.

John A. Zwolinski,

Director, Division of Licensing Project Management, Office of Nuclear Reactor Regulation.

[FR Doc. 03–1161 Filed 1–17–03; 8:45 am]

BILLING CODE 7590–01–P

NUCLEAR REGULATORY COMMISSION

Advisory Committee on Reactor Safeguards Subcommittee Meeting on Planning and Procedures; Notice of Meeting

The ACRS Subcommittee on Planning and Procedures will hold a meeting on February 5, 2003, Room T–2B1, 11545 Rockville Pike, Rockville, Maryland.

The entire meeting will be open to public attendance, with the exception of a portion that may be closed pursuant to 5 U.S.C. 552b(c) (2) and (6) to discuss organizational and personnel matters that relate solely to internal personnel rules and practices of ACRS, and information the release of which would constitute a clearly unwarranted invasion of personal privacy.

The agenda for the subject meeting shall be as follows:

Wednesday, February 5, 2003—1 p.m. until the conclusion of business

The Subcommittee will discuss proposed ACRS activities and related matters. The purpose of this meeting is to gather information, analyze relevant issues and facts, and formulate proposed positions and actions, as appropriate, for deliberation by the full Committee.

Oral statements may be presented by members of the public with the concurrence of the Subcommittee Chairman; written statements will be accepted and made available to the Committee. Persons desiring to make oral statements should notify the Designated Federal Official named below five days prior to the meeting, if possible, so that appropriate arrangements can be made. Electronic recordings will be permitted only during those portions of the meeting that are open to the public.

Further information regarding topics to be discussed, the scheduling of sessions open to the public, whether the meeting has been canceled or rescheduled, and the Chairman's ruling on requests for the opportunity to present oral statements and the time allotted therefor can be obtained by contacting the Designated Federal Official, Mr. Sam Duraiswamy (telephone: 301/415–7364) between 7:30 a.m. and 4:15 p.m. (EST). Persons planning to attend this meeting are urged to contact the above named individual at least two working days prior to the meeting to be advised of any potential changes in the proposed agenda.

Dated: January 13, 2003.

Sher Bahadur,

Associate Director for Technical Support, ACRS/ACNW.

[FR Doc. 03–1221 Filed 1–17–03; 8:45 am]

BILLING CODE 7590–01–P

NUCLEAR REGULATORY COMMISSION

Advisory Committee on Reactor Safeguards Meeting of the ACRS Subcommittee on Materials and Metallurgy; Notice of Meeting

The ACRS Subcommittees on Materials and Metallurgy will hold a meeting on February 5, 2003, Room T–

2B3, 11545 Rockville Pike, Rockville, Maryland.

The entire meeting will be open to public attendance.

The agenda for the subject meeting shall be as follows:

Wednesday, February 5, 2003—8:30 a.m. until the conclusion of business

The Subcommittee will meet with representatives of the NRC staff and discuss the risk metric and criteria that can be used for reevaluating the technical basis of the pressurized thermal shock (PTS) rule and the NRC staff's pilot plant studies. The purpose of this meeting is to gather information, analyze relevant issues and facts, and formulate proposed positions and actions, as appropriate, for deliberation by the full Committee.

Oral statements may be presented by members of the public with the concurrence of the Subcommittee Chairman; written statements will be accepted and made available to the Committee. Electronic recordings will be permitted only during those portions of the meeting that are open to the public. Persons desiring to make oral statements should notify the Designated Federal Official named below five days prior to the meeting, if possible, so that appropriate arrangements can be made.

During the initial portion of the meeting, the Subcommittee, along with any of its consultants who may be present, may exchange preliminary views regarding matters to be considered during the balance of the meeting.

The Subcommittee will then hear presentations by and hold discussions with representatives of the NRC staff, and other interested persons regarding this review.

Further information regarding topics to be discussed, whether the meeting has been canceled or rescheduled, and the Chairman's ruling on requests for the opportunity to present oral statements and the time allotted therefor can be obtained by contacting the Designated Federal Official, Dr. Richard P. Savio (telephone 301–415–7363) between 7:30 a.m. and 5 p.m. (EST). Persons planning to attend this meeting are urged to contact the above named individual at least two working days prior to the meeting to be advised of any potential changes in the proposed agenda.

Dated: January 14, 2003.

Sher Bahadur,

Associate Director for Technical Support, ACRS/ACNW.

[FR Doc. 03–1222 Filed 1–17–03; 8:45 am]

BILLING CODE 7590–01–P

NUCLEAR REGULATORY COMMISSION

Peer Review Committee for Source Term Modeling; Notice of Meeting

The Peer Review Committee For Source Term Modeling will hold a closed meeting on January 28–29, 2003 at Sandia National Laboratories (SNL), Albuquerque, NM.

The entire meeting will be closed to public attendance to protect information classified as national security information pursuant to 5 U.S.C. 552b(c)(1) and as proprietary pursuant to 5 U.S.C. 552b(c)(4).

The agenda for the subject meeting shall be as follows:

Wednesday, January 28 and Thursday, January 29, 2003—8:30 a.m. until the conclusion of business

The Committee will review SNL activities and aid SNL in development of guidance documents on source terms that will assist the NRC in evaluations of the impact of specific terrorist activities targeted at a range of spent fuel storage casks and radioactive material transport packages including those for spent fuel.

Further information contact: Dr. Andrew L. Bates (telephone 301–415–1963) or Dr. Charles G. Interrante (telephone 301–415–3967) between 7:30 a.m. and 4:15 p.m. (EDT).

Dated: January 14, 2003.

Andrew L. Bates,

Advisory Committee Management Officer.

[FR Doc. 03–1220 Filed 1–17–03; 8:45 am]

BILLING CODE 7590–01–P

SECURITIES AND EXCHANGE COMMISSION

Sunshine Act Meeting

Notice is hereby given, pursuant to the provisions of the Government in the Sunshine Act, Pub. L. 94–409, that the Securities and Exchange Commission will hold the following meetings during the week of January 20, 2003. An Open Meeting will be held on Wednesday, January 22, 2003, at 10 a.m., in Room 1C30, the William O. Douglas Room, and a Closed Meeting will be held on Thursday, January 23, 2003, at 10 a.m.

Commissioners, Counsel to the Commissioners, the Secretary to the Commission, and recording secretaries will attend the Closed Meeting. Certain staff members who have an interest in the matters may also be present.

The General Counsel of the Commission, or his designee, has certified that, in his opinion, one or more of the exemptions set forth in 5 U.S.C. 552b(c)(3), (5), (7), (9)(B) and (10) and 17 CFR 200.402(a)(3), (5), (7), (9)(ii) and (10), permit consideration of the scheduled matters at the Closed Meeting.

The subject matter of the Open Meeting scheduled for Wednesday, January 22, 2003 will be:

1. The Commission will consider whether to adopt new rules 30a-3 and 30d-1 and amendments to rules 8b-15, 30a-1, 30a-2, 30b1–1, 30b1–3, and 30b2–1 under the Investment Company Act of 1940, amendments to rules 12b-25, 13a-15, and 15d-15 and Form 12b-25 under the Securities Exchange Act of 1934, amendments to Form N–SAR under the Exchange Act and the Investment Company Act, and new Form N–CSR under the Exchange Act and Investment Company Act. These new rules and form, and rule and form amendments, would require registered management investment companies to file certified shareholder reports on new Form N–CSR with the Commission, and would designate these certified shareholder reports as reports that are required under sections 13(a) and 15(d) of the Exchange Act and Section 30 of the Investment Company Act. A registered management investment company's principal executive and financial officers would be required to certify the information contained in its reports on Form N–CSR in the manner specified by Section 302 of the Sarbanes-Oxley Act of 2002. The amendments would also remove the requirement that Form N–SAR be certified by a registered investment company's principal executive and financial officers, and would provide that, for registered management investment companies, Form N–SAR would be filed under the Investment Company Act only. In addition, the amendments would implement Sections 406 and 407 of the Sarbanes-Oxley Act by requiring a registered management investment company to provide disclosure on Form N–CSR or Form N–SAR, as applicable, regarding whether the investment company has adopted a code of ethics for the company's principal executive officer and senior financial officers, and whether the investment company has at least one ''audit committee expert'' serving on its audit committee, and if so, the name of the expert and whether the expert is independent of management.

2. The Commission will consider adopting rules to establish standards of professional conduct for attorneys who appear and practice before the Commission in any way in the representation of issuers. As proposed, the rules would require an attorney to report evidence of a material violation of securities laws, a material breach of fiduciary duty, or similar material violation by the issuer or by any officer, director, employee, or agent of the issuer to the issuer's chief legal officer or the chief executive officer of the company (or the equivalents); if they do not respond appropriately to the evidence, the rule would require the attorney to report the evidence to the issuer's audit committee, another committee of independent directors, or the full board of directors; if the directors do not respond appropriately, the rule would

require or permit the attorney to withdraw and notify the Commission of the withdrawal.

3. The Commission will consider whether to adopt amendments mandated by Section 401(a) of the Sarbanes-Oxley Act of 2002. The rules would require a public company to provide in its ''Management's Discussion and Analysis'' section of Commission filings: (1) A discussion of off-balance sheet arrangements; and (2) a table of payments under specified contractual obligations due in short- and long-term periods.

4. The Commission will consider adopting amendments to its existing requirements regarding auditor independence to enhance the independence of accountants that audit and review financial statements and prepare attestation reports filed with the Commission. As directed by Section 208(a) of the Sarbanes-Oxley Act of 2002, the Commission is considering adopting rules to:

- Revise its regulations related to the non-audit services that, if provided to an audit client, would impair an accounting firm's independence;
- Require that an issuer's audit committee pre-approve all audit and non-audit services provided to the issuer by the auditor of an issuer's financial statements;
- Prohibit certain audit partners on the audit engagement team from providing audit services to the issuer for more than five or seven consecutive years, depending on the partner's role in the audit engagement;
- Prohibit an accounting firm from auditing an issuer's financial statements if certain members of management of that issuer had been members of the accounting firm's audit engagement team within the one-year period preceding the commencement of audit procedures;
- Require that the auditor of an issuer's financial statement report certain matters to the issuer's audit committee, including ''critical'' accounting policies used by the issuer; and
- Require disclosures to investors of information related to the audit and non-audit services provided by, and fees paid by the issuer to, the auditor of the issuer's financial statements.

In addition, under the rules to be considered by the Commission, an accountant would not be independent from an audit client if certain audit partners of the accounting firm, who are members of the engagement team, received compensation based on their selling any service to that client other than audit, review and attest services.

5. The Commission will consider whether to adopt amendments to implement section 802 of the Sarbanes-Oxley Act of 2002. The rule, if adopted, would specify that auditors should retain records relevant to the audits and reviews of financial statements filed with the Commission, including workpapers and other documents that form the basis of the audit or review and memoranda, correspondence, communications, other documents, and records (including electronic records), which are created, sent or received in connection with the audit or review and contain conclusions, opinions, analyses, or financial data related to the audit or review.

6. The Commission will consider whether to adopt amendments to its registration and reporting forms for registered management investment companies, as well as new rule 30b1–4 and new Form N–PX under the Investment Company Act of 1940. These rules would require mutual funds and other registered management investment companies to disclose the policies and procedures that they use to determine how to vote proxies relating to portfolio securities. They would also require registered management investment companies to file with the Commission on an annual basis, and make available to shareholders, their proxy voting records.

7. The Commission will consider whether to adopt a new rule and amendments to its recordkeeping rules for registered investment advisers under the Investment Advisers Act. The new rule would require investment advisers to adopt proxy voting policies and procedures, describe the policies and procedures to clients and provide clients with copies on request, and disclose how clients can obtain information about how the adviser voted their proxies. The recordkeeping amendments would require advisers to keep certain records regarding client proxies.

The subject matter of the Closed Meeting scheduled for Thursday, January 23, 2003 will be:

Formal orders of investigation;
Institution and settlement of administrative proceedings of an enforcement nature; and
Institution and settlement of injunctive actions.

At times, changes in Commission priorities require alterations in the scheduling of meeting items. For further information and to ascertain what, if any, matters have been added, deleted or postponed, please contact:

The Office of the Secretary at (202) 942–7070.

Dated: January 15, 2003.

Jonathan G. Katz,

Secretary.

[FR Doc. 03–1282 Filed 1–15–03; 4:09 pm]

BILLING CODE 8010–01–M

SMALL BUSINESS ADMINISTRATION

[Declaration of Disaster #P004]

State of South Carolina

As a result of the President's major disaster declaration for Public Assistance on January 8, 2003 the U.S. Small Business Administration is activating its disaster loan program only for private non-profit businesses that provide essential services of a governmental nature. I find that Cherokee, Greenville, Laurens, Spartanburg, Union, and York Counties in the State of South Carolina constitute a disaster area due to damages caused by a severe ice storm occurring from December 4, 2002, and continuing through December 6, 2002. Applications for loans for physical damage as a result of this disaster may be filed until the close of business on March 10, 2003 at the address listed below or other locally announced locations: U.S. Small Business Administration, Disaster Area 2 Office, One Baltimore Place, Suite 300, Atlanta, GA 30308.

The interest rates are:

	Percent
For Physical Damage:	
Non-Profit Organizations Without Credit Available Elsewhere	3.324
Non-Profit Organizations With Credit Available Elsewhere	5.500

The number assigned to this disaster for physical damage is P00411.

(Catalog of Federal Domestic Assistance Program Nos. 59008)

Dated: January 13, 2003.

Herbert L. Mitchell,

Associate Administrator for Disaster Assistance.

[FR Doc. 03–1231 Filed 1–17–03; 8:45 am]

BILLING CODE 8025–01–P

DEPARTMENT OF TRANSPORTATION

Office of the Secretary

Notice of Applications for Certificates of Public Convenience and Necessity and Foreign Air Carrier Permits Filed Under subpart B (formerly subpart Q) during the Week Ending January 10, 2003.

The following Applications for Certificates of Public Convenience and Necessity and Foreign Air Carrier Permits were filed under subpart B (formerly subpart Q) of the Department of Transportation's Procedural Regulations (*See* 14 CFR 301.201 *et. seq.*). The due date for Answers, Conforming Applications, or Motions to Modify Scope are set forth below for each application. Following the Answer period DOT may process the application by expedited procedures. Such procedures may consist of the adoption of a show-cause order, a tentative order, or in appropriate cases a final order without further proceedings.

Docket Number: OST–2003–14213.

Date Filed: January 7, 2003.

Due Date for Answers, Conforming Applications, or Motion to Modify Scope: January 28, 2003.

Description: Application of Delaware Skyways, LLC, pursuant to 49 U.S.C.

41102 and subpart B, requesting a certificate of public convenience and necessity, authorizing interstate charter air transportation of persons, property, and cargo.

Dorothy Y. Beard,

Chief, Docket Operations & Media Management, Federal Register Liaison.

[FR Doc. 03–1165 Filed 1–17–03; 8:45 am]

BILLING CODE 4910–62–P

DEPARTMENT OF TRANSPORTATION

Federal Aviation Administration

Random Drug and Alcohol Testing Percentage Rates of Covered Aviation Employees for the Period of January 1, 2003 Through December 31, 2003

AGENCY: Federal Aviation Administration (FAA), Department of Transportation.

ACTION: Notice.

SUMMARY: The FAA has determined that the minimum random drug and alcohol testing percentage rates for the period January 1, 2003 through December 31, 2003, will remain at 25 percent of covered aviation employees for random drug testing and 10 percent of covered aviation employees for random alcohol testing.

FOR FURTHER INFORMATION CONTACT: Mr. Arnold N. Schwartz, Office of Aerospace Medicine, Drug Abatement Division, Program Analysis Branch (AAM–810), Federal Aviation Administration, 800 Independence Avenue, SW., Washington, DC 20591; telephone (202) 267–5970.

Discussion: The FAA Administrator set the minimum random drug testing rate for 2003 at 25 percent because the data received under the Management Information System (MIS) reporting requirements for two consecutive calendar years indicate that the positive rate is less than 1.0 percent. The FAA Administrator set the minimum alcohol testing rate for 2003 at 10 percent because the data received under the MIS reporting requirements for two consecutive calendar years indicate that the positive rate is less than 0.5 percent.

SUPPLEMENTARY INFORMATION: If you have questions about how the annual random drug and alcohol percentage testing rates are determined please refer to the Code of Federal Regulations title 14: part 121, Appendices I and J.

Jon L. Jordan,

Federal Air Surgeon.

[FR Doc. 03–1166 Filed 1–17–03; 8:45 am]

BILLING CODE 4910–13–M

DEPARTMENT OF TRANSPORTATION

Federal Highway Administration

Environmental Impact Statement; Mills County, IA; Sarpy County, NE

AGENCY: Federal Highway Administration (FHWA), DOT.

ACTION: Notice of intent.

SUMMARY: The FHWA is issuing this notice to advise the public that an environmental impact statement will be prepared for a proposed bridge and roadway improvement project in Sarpy County, Nebraska, and in Mills County, Iowa.

FOR FURTHER INFORMATION CONTACT: Lisa Rold, Transportation Engineer, FHWA Iowa Division Office, 105 Sixth Street, Ames, IA 50010, Ph. 515–233–7307; or James P. Rost, Director, Office of Location and Environment, Iowa Department of Transportation, 800 Lincoln Way, Ames, IA 50010, Ph. 515–239–1798.

SUPPLEMENTARY INFORMATION:

Electronic Access

An electronic copy of this document is available for free download from the Federal Bulletin Board (FBB). The FBB is a free electronic bulletin board service of the Superintendent of Documents, U.S. Government Printing Office (GPO).

The FBB may be accessed in four ways: (1) Via telephone in dial-up mode or via the Internet through (2) telnet, (3) FTP, and (4) the World Wide Web.

For dial-in mode a user needs a personal computer, modem, telecommunications software package and telephone line. A hard disk is recommended for file transfers.

For Internet access a user needs Internet connectivity. Users can telnet or FTP to: fedbbs.access.gpo.gov. Users can access the FBB via the World Wide Web at *http://fedbbs.access.gpo.gov.*

User assistance for the FBB is available from 7 a.m. until 5 p.m., Eastern Time, Monday through Friday (except federal holidays) by calling the GPO Office of Electronic Information Dissemination Services at 202–512–1530, toll-free at 888–293–6498; sending an e-mail to *gpoaccess@gpo.gov;* or sending a fax to 202–512–1262.

Access to this notice is also available to Internet users through the **Federal Register's** home page at *http://www.nara.gov/fedreg.*

Background

The FHWA, in cooperation with the Iowa Department of Transportation (Iowa DOT) and Nebraska Department of Roads (NDOR), will prepare an EIS for the proposed Bellevue Bridge Study. In addition to a new bridge over the Missouri River, the proposed project would also include roadway improvements to provide a high-speed connection from US 75 in Sarpy County, Nebraska to Interstate 29 in Mills County, Iowa.

The existing two-lane toll bridge over the Missouri River at Bellevue on Nebraska Highway 370 is both functionally and structurally obsolete. The bridge has a narrow 20-foot wide driving surface and is in poor structural condition. The proposed bridge and roadway improvements will improve safety, traffic flow, and commerce between western Iowa and eastern Nebraska.

Alternatives under consideration include: (1) Taking no action; (2) rehabilitating and widening the existing two-lane bridge; and (3) constructing a roadway on a new location (including near the existing bridge). The build alternative will include consideration of various alignments and grades.

Letters describing the proposed action and soliciting comments will be sent to appropriate Federal, State, and local agencies, and to private organizations and citizens who have previously expressed or are known to have interest in this proposal. A series of public meetings will be held in 2003 and 2004. In addition, a public hearing will be held upon completion of the draft EIS. Public notice will be given of the time and place of the public meetings and public hearing. The draft EIS will be available for public and agency review and comment prior to the public hearing.

A scoping meeting (the initial public meeting) will be held for identifying significant issues to be addressed in the environmental impact statement. The date and location of the scoping meeting have not yet been determined but will be advertised in various local media.

To ensure that the full range of issues related to this proposed action are addressed and all significant issues are identified, comments and suggestions are invited from all interested parties. Comments or questions concerning this proposed action and the EIS should be directed to the FHWA or Iowa Department of Transportation at the address provided in the caption **FOR FURTHER INFORMATION CONTACT.**

(Catalog of Federal Domestic Assistance Program Number 20.205, Highway Planning and Construction. The regulations implementing Executive Order 12372 regarding intergovernmental consultation on Federal programs and activities apply to this program.)

(Authority: 23 U.S.C. 315; 49 CFR 1.48)

Dated: January 13, 2003.

Bobby W. Blackmon,

Division Administrator, FHWA, Iowa Division.

[FR Doc. 03–1193 Filed 1–17–03; 8:45 am]

BILLING CODE 4910–22–P

DEPARTMENT OF TRANSPORTATION

Federal Highway Administration

Notice To Rescind Notice of Intent To Prepare an Environmental Impact Statement (EIS): Mills County, IA; Cass County, NE; and Sarpy County, NE

AGENCY: Federal Highway Administration (FHWA), DOT.

ACTION: Rescind notice of intent to prepare an EIS.

SUMMARY: The FHWA is issuing this notice to advise the public that we are rescinding the notice of intent (NOI) to prepare an EIS for improvements proposed to U.S. 34, from Interstate 29 in Mills County, IA, to U.S. 75 in Cass or Sarpy county in Nebraska.

FOR FURTHER INFORMATION CONTACT: Lisa Rold, Transportation Engineer, FHWA Iowa Division Office, 105 Sixth Street, Ames, IA 50010, Ph. 515–233–7307; or James P. Rost, Director, Office of Location and Environment, Iowa Department of Transportation, 800 Lincoln Way, Ames, IA 50010, Ph. 515–239–1798.

SUPPLEMENTARY INFORMATION:

Electronic Access

An electronic copy of this document is available for free download from the Federal Bulletin Board (FBB). The FBB is a free electronic bulletin board service of the Superintendent of Documents, U.S. Government Printing Office (GPO).

The FBB may be accessed in four ways: (1) Via telephone in dial-up mode or via the Internet through (2) telnet, (3) FTP, and (4) the World Wide Web.

For dial-in mode a user needs a personal computer, modem, telecommunications software package and telephone line. A hard disk is recommended for file transfers.

For Internet access a user needs Internet connectivity. Users can telnet or FTP to: *fedbbs.access.gpo.gov.* Users can access the FBB via the World Wide Web at *http://fedbbs.access.gpo.gov.*

User assistance for the FBB is available from 7 a.m. until 5 p.m., Eastern Time, Monday through Friday (except federal holidays) by calling the GPO Office of Electronic Information Dissemination Services at 202–512–1530, toll-free at 888–293–6498; sending an e-mail to *gpoaccess@gpo.gov;* or sending a fax to 202–512–1262.

Access to this notice is also available to Internet users through the **Federal Register**'s home page at *http://www.nara.gov/fedreg.*

Background

The FHWA, in cooperation with the Iowa Department of Transportation (Iowa DOT) and Nebraska Department of Roads (NDOR), are rescinding the notice of intent to prepare an EIS for improvements proposed to U.S. 34, from Interstate 29 in Mills County, IA, to U.S. 75 in Cass or Sarpy county in Nebraska.

On Sept. 12, 1994, FHWA issued a NOI to prepare an EIS as part of the development process for the replacement of the U.S. 34 bridge over the Missouri River.

In January 1996, a draft EIS was released evaluating the replacement of the U.S. 34 bridge over the Missouri River at the city of Plattsmouth in Cass County, NE.

A multi-step screening process, which included public information meetings and a public hearing, was used to develop and evaluate two alignment alternatives. One alignment was located near the city of Bellevue in Sarpy County, NE, and the other near the city of Plattsmouth in Cass County, NE.

Comments received during and subsequent to the public hearing on the draft EIS determined that consensus could not be reached for identifying a preferred alignment for the final EIS. Consequently, no final EIS will be prepared.

Recently, the Iowa DOT and NDOR agreed to jointly pursue the development of two bridges across the Missouri River, one near Bellevue, NE, and a second near Plattsmouth, NE. As part of this agreement, two environmental impact statements will be prepared, one for each bridge.

The Bellevue bridge replacement study and Plattsmouth bridge replacement study will be the subjects of two separate notices of intent, published subsequent to this notice. Comments or questions concerning the decision to not prepare a Final EIS should be directed to the Iowa Department of Transportation or FHWA at the address provided in the caption **FOR FURTHER INFORMATION CONTACT.**

(Catalog of Federal Domestic Assistance Program Number 20.205, Highway Planning and Construction. The regulations implementing Executive Order 12372 regarding intergovernmental consultation on Federal programs and activities apply to this program)

(Authority: 23 U.S.C. 315; 49 CFR 1.48)

Dated: January 13, 2003.

Bobby W. Blackmon,

Division Administrator, FHWA Iowa Division.

[FR Doc. 03–1194 Filed 1–17–03; 8:45 am]

BILLING CODE 4910–22–P

DEPARTMENT OF TRANSPORTATION

Maritime Administration

Reports, Forms and Recordkeeping Requirements; Agency Information Collection Activity Under OMB Review

AGENCY: Maritime Administration, DOT.

ACTION: Notice and request for comments.

SUMMARY: In compliance with the Paperwork Reduction Act of 1995 (44 U.S.C. 3501 *et seq.*), this notice announces that the Information Collection abstracted below has been forwarded to the Office of Management and Budget (OMB) for review and approval. The nature of the information collection is described as well as its expected burden. The **Federal Register** Notice with a 60-day comment period soliciting comments on the following collection of information was published on October 11, 2002. No comments were received.

DATES: Comments must be submitted on or before February 20, 2003.

FOR FURTHER INFORMATION CONTACT: Thomas W. Harrelson, Maritime Administration, MAR–590, 400 Seventh St., SW., Washington, DC 20590. Telephone: 202–366–4610; FAX: 202–366–5522; or e-mail: *thomas.harrelson@marad.dot.gov.* Copies of this collection also can be obtained from that office.

SUPPLEMENTARY INFORMATION: Maritime Administration (MARAD).

Title: Monthly Report of Ocean Shipments Moving under Export-Import Bank Financing.

OMB Control Number: 2133–0013.

Type of Request: Extension of currently approved collection.

Affected Public: Shippers subject to Export/Import Bank financing.

Form (s): MA–518.

Abstract: Public Resolution 17 (PR 17) requires MARAD to monitor and enforce the U.S.-flag shipping requirements relative to the loans/guarantees extended by the Export-Import Bank (EXIMBANK) to foreign borrowers. PR 17 requires that all shipments financed by EXIMBANK and that move by sea, must be transported exclusively on U.S.-flag registered vessels unless a waiver is obtained from MARAD.

Annual Estimated Burden Hours: 168 hours.

ADDRESSES: Send comments to the Office of Information and Regulatory Affairs, Office of Management and Budget, 725 17th Street, NW., Washington, DC 20503, Attention MARAD Desk Officer.

Comments are Invited on: (a) Whether the proposed collection of information is necessary for the proper performance of the functions of the agency, including whether the information will have practical utility; (b) the accuracy of the agency's estimate of the burden of the proposed information collection; (c) ways to enhance the quality, utility and clarity of the information to be collected; and (d) ways to minimize the burden of the collection of information on respondents, including the use of automated collection techniques or other forms of information technology.

A comment to OMB is best assured of having its full effect if OMB receives it within 30 days of publication.

Issued in Washington, DC, on January 14, 2003.

Joel C. Richard,

Secretary, Maritime Administration.

[FR Doc. 03–1188 Filed 1–17–03; 8:45 am]

BILLING CODE 4910–81–P

DEPARTMENT OF THE TREASURY

District of Columbia's Retired Superior Court and Court of Appeals Justices; New Payroll Office

SUMMARY: The Department of Treasury's Office of DC Pensions (ODCP) is issuing this notice to advise the public of a new payroll office to serve the District of Columbia's retired Superior Court and Court of Appeals justices. The payroll services provided for these justices will change from the District of Columbia's Office of Pay and Retirement Services (OPRS) to the Department of the Treasury's Bureau of Public Debt (BPD), effective December 1, 2002.

ADDRESSES: Pensions Operations Analyst, Office of DC Pensions, P.O. Box 14307, Washington DC 20044–4307, E-Mail: *STAR@do.treas.gov;* or *DCPension Payroll@bpd.treas.gov* at the Bureau of the Public Dept, Parkersburg, WV.

FOR FURTHER INFORMATION CONTACT: Emily Moltz, 202–622–2316.

SUPPLEMENTARY INFORMATION: In compliance with the Balanced Budget Act of 1997, Pub. L. 105–33, the Department of the Treasury's Bureau of Public Debt (BPD) located in Parkersburg, WV, will begin using a new retirement system called STAR (System to Administer Retirement) to pay the retirements for the District of Columbia's retired Superior Court and Court of Appeals justices.

The current system run by OPRS will produce its last payment to the justices on December 2, 2002 and BPD will produce the first payment to the justices using STAR on January 2, 2003. The STAR Payroll Office Number is 99004863. Any outstanding garnishments in place today, such as tax levies, child support, alimony, or bankruptcy, will also be deducted from the annuitant's payment in the new system. Requests to perform garnishments should be directed to STAR DC Pension Payroll Office, Bureau of Public Debt PO Box 1328 Parkersburg, WV 26101–1328 and marked time sensitive.

If you have any questions or concerns regarding this transition, please contact the Pension Operations Analyst, at *STAR@do.treas.gov.*

Kay Clarey,

Director, Information System, Office of DC Pensions.

[FR Doc. 03–1042 Filed 1–17–03; 8:45 am]

BILLING CODE 4810–25–M

DEPARTMENT OF THE TREASURY

Office of the Comptroller of the Currency

Agency Information Collection Activities: Submission for OMB Review; Comment Request

AGENCY: Office of the Comptroller of the Currency (OCC), Treasury.

ACTION: Notice and request for comment.

SUMMARY: The OCC, as part of its continuing effort to reduce paperwork and respondent burden, invites the general public and other Federal agencies to take this opportunity to comment on a continuing information collection, as required by the Paperwork Reduction Act of 1995. An agency may not conduct or sponsor, and a respondent is not required to respond to, an information collection unless the information collection displays a currently valid OMB control number. The OCC is soliciting comment concerning its information collection titled, ''Release of Non-Public Information—12 CFR 4.'' The OCC also gives notice that it has sent the information collection to OMB for review and approval.

DATES: You should submit your comments to the OCC and the OMB Desk Officer by February 20, 2003.

ADDRESSES: You should direct comments to:

Communications Division, Office of the Comptroller of the Currency, Public Information Room, Mailstop 1–5, Attention: 1557–0200, 250 E Street, SW., Washington, DC 20219. Due to delays in paper mail in the Washington area, commenters are encouraged to submit comments by fax or e-mail. Comments may be sent by fax to (202) 874–4448, or by e-mail to *regs.comments@occ.treas.gov.* You can inspect and photocopy the comments at the OCC's Public Information Room, 250 E Street, SW., Washington, DC 20219. You can make an appointment to inspect the comments by calling (202) 874–5043.

Joseph F. Lackey, Jr., OMB Desk Officer for the OCC, Office of Information and Regulatory Affairs, Office of Management and Budget, New Executive Office Building, Room 10235, Washington, DC 20503.

FOR FURTHER INFORMATION CONTACT: You can request additional information or a copy of the collection from Jessie Dunaway, OCC Clearance Officer, or Camille Dixon, (202) 874–5090, Legislative and Regulatory Activities Division, Office of the Comptroller of the Currency, 250 E Street, SW., Washington, DC 20219.

SUPPLEMENTARY INFORMATION: The OCC is proposing to extend OMB approval of the following information collection:

Title: Release of Non-Public Information—12 CFR 4.

OMB Number: 1557–0200.

Description: This submission covers an existing regulation and involves no change to the regulation or to the information collection. The OCC requests only that OMB extend its approval of the information collection.

The information collection requirements contained in 12 CFR part 4 are as follows:

Section 4.33 requires a person seeking non-public OCC information to submit a request in writing to the OCC.

Section 4.35(b)(3) requires a third party to submit to the OCC a separate request for information beyond the scope of a previous request for testimony.

Section 4.37(a)(2) requires current and former OCC employees subpoenaed or otherwise requested to provide information to notify the OCC.

Section 4.37(b)(1)(i) requires any person, national bank, or other entity to seek OCC approval before disclosing non-public OCC information.

Section 4.37(b)(3) requires any person, national bank, or other entity served with a request, subpoena, order, motion to compel, or other judicial or administrative process to provide non-

public OCC information to notify the OCC.

Section 4.38(a) and (b) requires may a condition a decision to release non-public OCC information on a written agreement of confidentiality or agreement of the parties to appropriate limitations.

Section 4.39 requires requesters who require authenticated records or certificates to request certifications from the OCC.

Type of Review: Extension of a currently approved collection.

Affected Public: Businesses or other for-profit; individuals.

Estimated Number of Respondents: 170.

Estimated Total Annual Responses: 170.

Frequency of Response: On occasion.

Estimated Total Annual Burden: 467 hours.

Dated: January 10, 2003.

Mark J. Tenhundfeld,

Assistant Director, Legislative and Regulatory Activities Division.

[FR Doc. 03–1182 Filed 1–17–03; 8:45 am]

BILLING CODE 4810–33–P

DEPARTMENT OF VETERANS AFFAIRS

Research and Development Office; Government Owned Invention Available for Licensing

AGENCY: Research and Development Office, Veterans Affairs.

ACTION: Notice of Government Owned Invention Available for Licensing.

SUMMARY: The invention listed below is owned by the U.S. government as represented by the Department of Veterans Affairs, and is available for licensing in accordance with 35 U.S.C. 207 and 37 CFR part 404 to achieve expeditious commercialization of results of federally funded research and development. Foreign patents are filed on selected inventions to extend market coverage for U.S. companies and may also be available for licensing.

FOR FURTHER INFORMATION CONTACT: Technical and licensing information on the invention may be obtained by writing to: Mindy Aisen, MD, Department of Veterans Affairs, Director Technology Transfer Program, Research and Development Office, 810 Vermont Avenue NW., Washington, DC 20420; fax 202–275–7228; e-mail at *mindy.aisen@mail.va.gov.* Any request for information should include the Number and title for the relevant invention as indicated below. Issued patents may be obtained from the Commissioner of Patents, U.S. Patent and Trademark Office, Washington, DC 20231.

SUPPLEMENTARY INFORMATION: The invention available for licensing is: 6,211,194 ''Solution containing Nicotine''.

Dated: January 9, 2003.

Anthony J. Principi,

Secretary, Department of Veterans Affairs.

[FR Doc. 03–1209 Filed 1–17–03; 8:45 am]

BILLING CODE 8320–01–M

Corrections

Federal Register

Vol. 68, No. 13

Tuesday, January 21, 2003

This section of the FEDERAL REGISTER contains editorial corrections of previously published Presidential, Rule, Proposed Rule, and Notice documents. These corrections are prepared by the Office of the Federal Register. Agency prepared corrections are issued as signed documents and appear in the appropriate document categories elsewhere in the issue.

ENVIRONMENTAL PROTECTION AGENCY

[FRL–7431–9]

Federal Agency Hazardous Waste Compliance Docket

Correction

In notice document 02–32908 beginning on page 107 in the issue of Thursday, January 2, 2003, make the following corrections:

1. On page 111, in the table titled **FEDERAL AGENCY HAZARDOUS WASTE COMPLIANCE DOCKET UPDATE #16—ADDITIONS**, under the column ''Facility name'', in the fifth entry, ''Gllenns'' should read ''Glenns''.

2. On the same page, in the table titled **FEDERAL AGENCY HAZARDOUS WASTE COMPLIANCE DOCKET UPDATE #16—DELETIONS**, under the column ''Facility name'', in the fourth entry, ''Clairborne'' should read ''Claiborne''.

3. On page 112, in the table titled **FEDERAL AGENCY HAZARDOUS WASTE COMPLIANCE DOCKET UPDATE #16—CORRECTIONS**, under the column ''Code'', in the fourth entry, ''12'' should read ''23''.

4. On the same page, in the same table, under the column ''Address'', in the 13th entry, ''R8AE'' should read ''R8E''.

5. On the same page, in the same table, under the same column, in the 14th entry, ''R8AE'' should read ''R8E''.

6. On the same page, in the same table, under the same column, in the 17th entry, ''36E'' should read ''37E''.

7. On the same page, in the same table, under the same column, in the 18th entry, ''36E'' should read ''37E''.

8. On the same page, in the same table, under the same column, in the last entry, in the third line, ''of Tulelake'' should be removed.

9. On page 113, in the table, under the column, ''Address'', in the third entry, ''Woodlsey'' should read ''Woolsey''.

10. On page 114, in the table, under the column, ''City'', in the 11th entry, ''Natick 0'' should read ''Natick''.

11. On the same page, in the same table, under the column, ''Facility Name'', in the 15th entry, ''Doi'' should read ''DOI''.

12. On page 115, in the table, under the column, ''Facility Name'', in the third entry, ''U.S. Defense Fuel Support Point'' should read ''U.S. Defense Fuel Support Point''.

13. On page 116, in the table, under the column, ''Facility name'', in the second through 14th entries, ''Bia'' should read ''BIA''.

14. On the same page, in the same table, under the same column, in the 23rd entry, ''BLM–Glass Buttes'' should read ''BLM–Glass Buttes Retorts''.

15. On page 118, in the table, under the column, ''Address'', in the eighth entry, ''Capital'' should read ''Capitol''.

16. On the same page, in the same table, under the same column, in the 21st entry, ''O='.''' should be removed.

[FR Doc. C2–32908 Filed 1–17–03; 8:45 am]

BILLING CODE 1505–01–D

FEDERAL RETIREMENT THRIFT INVESTMENT BOARD

Sunshine Act Meeting

Correction

In notice document 03–601 appearing on page 1511 in the issue of Friday, January 10, 2003 make the following correction:

In the third column, the agency heading should read as set forth above.

[FR Doc. C3–601 Filed 1–17–03; 8:45 am]

BILLING CODE 1505–01–D

Federal Register

Tuesday,
January 21, 2003

Part II

Environmental Protection Agency

40 CFR Part 82

Protection of Stratospheric Ozone: Allowance System for Controlling HCFC Production, Import and Export; Final Rule

ENVIRONMENTAL PROTECTION AGENCY

40 CFR Part 82

[FRL–7428–6]

RIN 2060–AH67

Protection of Stratospheric Ozone: Allowance System for Controlling HCFC Production, Import and Export

AGENCY: Environmental Protection Agency (EPA).

ACTION: Final rule.

SUMMARY: EPA is establishing an allowance system to control the U.S. consumption and production of ozone-depleting substances (ODSs)known as hydrochlorofluorocarbons (HCFCs). While much less destructive to the stratospheric ozone layer than chlorofluorocarbons (CFCs), HCFCs do contribute to ozone depletion and alternatives are generally available. The HCFC allowance system is part of EPA's program to reduce the emissions of ODSs to protect the stratospheric ozone layer. Protection of the stratospheric ozone layer helps reduce rates of skin cancer and cataracts. The U.S. is obligated under the Montreal Protocol on Substances that Deplete the Ozone Layer to limit HCFC consumption to a specific level and to reduce it in a step-wise fashion beginning January 1, 2004. The U.S. has also agreed to limit production to a specific level beginning January 1, 2004. This action also includes a petition process for exemptions to the January 1, 2003, phaseout of HCFC–141b.

EFFECTIVE DATE: January 21, 2003.

ADDRESSES: Materials relevant to this rulemaking are contained in Docket No. A–98–33 at the Air and Radiation Docket at EPA West, 1301 Constitution Avenue NW, Room B108, Mail Code 6102T, Washington, DC 20460, Phone: (202)566–1742, Fax: (202)566–1741.

FOR FURTHER INFORMATION CONTACT: Vera Au, EPA, Global Programs Division, Office of Atmospheric Programs, Office of Air and Radiation (6205J), 1200 Pennsylvania Avenue, NW, Washington, DC 20460, (202) 564–2216.

SUPPLEMENTARY INFORMATION: Under the *Montreal Protocol on Substances that Deplete the Ozone Layer* (Protocol), the U.S. and other industrialized countries that are Parties to the Protocol have agreed to limit production and consumption of hydrochlorofluorocarbons (HCFCs) and to phase out consumption in a step-wise fashion over time, culminating in a complete phaseout in 2030. Title VI of the Clean Air Act (CAA) authorizes the U.S. EPA to promulgate regulations to manage the consumption and production of HCFCs until the total phaseout in 2030. In 1992, a graduated consumption phaseout was established under the Protocol for industrialized countries and in 1993 the EPA established a chemical-by-chemical phaseout to implement the graduated consumption phaseout (58 FR 65018, December 10, 1993). The consumption cap became effective in 1996 and consumption in the U.S. was about 15% percent below the cap for many years. In 1998 and 1999, consumption rose to levels that approached the cap so options for an allowance system were offered for comment with the publication of the Advance Notice of Proposed Rulemaking on April 5, 1999 (64 FR 16373). The Notice of Proposed Rulemaking was published on July 20, 2001, (66 FR 38064) and a public hearing was held on August 27, 2001, for comments on the proposed rule.

Abbreviations and Acronyms Used in This Document

Act—Clean Air Act Amendments of 1990
ANPRM—Advance Notice of Proposed Rulemaking
Article 2 countries—industrialized countries
Article 5 countries—developing countries
CAA—Clean Air Act Amendments of 1990
cap—limitation in level of production or consumption
CFC—chlorofluorocarbon
CFR—Code of Federal Regulations
EPA—Environmental Protection Agency
FDA—Food and Drug Administration
FR—Federal Register
HCFC—hydrochlorofluorocarbon
NASA—National Aeronautics and Space Administration
NODA—Notice of Data Availability
NPRM—Notice of Proposed Rulemaking
ODP—ozone depletion potential (40 CFR part 82)
ODS—ozone-depleting substance
Party—Signatory country to the *Montreal Protocol on Substances that Deplete the Ozone Layer*
Protocol—*Montreal Protocol on Substances that Deplete the Ozone Layer*
SBREFA—Small Business Regulatory Enforcement Fairness Act
SNAP—Significant New Alternatives Policy
UNEP—United Nations Environment Programme
U.S.—United States

Table of Contents

I. Regulated Entities
II. Background
A. How do the *Montreal on Substances that Deplete the Ozone Layer* and the U.S. Phase Out HCFCs?
B. What Sections of the Clean Air Act Apply to this Rulemaking?
III. Discussion of Comments on the July 20, 2001, Notice of Proposed Rulemaking (NPRM)
A. Will Production and Consumption Allowances be Available?
B. Will Allowances be Tracked Chemical-by-Chemical?
C. Will Allowances Be Distributed on a One-Time Basis?
D. Will 100 Percent of the U.S. Cap be Allocated?
1. Consumption Allowances
2. Production Allowances
E. Will There Be HCFC–141b Exemption Allowances for Continuing Needs?
1. Who May Submit a Petition for HCFC–141b Exemption Allowances Beyond January 1, 2003
2. Definition of ''Space Vehicle''
3. Definition of ''Formulator''
4. Petition Process to Include HCFC–141b Formulators
5. Information Supporting Decision to Expand the Petition Process
6. Reason for Petition Process
7. Total Quantity for Exemption
8. How Long EPA Will Continue to Receive/Review Petitions
9. Information to be Submitted in a Petition
10. Deadline for Submitting Petitions
11. Length of Review Process
12. Notification of Petitioners
13. How HCFC–141b Exemption Allowances Will be Expended
14. Transfer of HCFC–141b Exemption Allowances or Carryover into Subsequent Control Periods
15. Transfer of HCFC–141b Exemption Allowances in an Acquisition
16. Reporting and Recordkeeping Requirements
17. Renewal of Requests for HCFC–141b Exemption Allowances Beyond the First Control Period
18. Penalties for Exceeding HCFC–141b Exemption Allowances
19. Criteria for Approval/Disapproval
20. Other Limitations to Approval of Petitions
F. How Were the Baselines Established?
G. Will I Be Able to Transfer Allowances?
1. Transfers Within Groups of HCFCs
2. Inter-Pollutant Transfers
3. Inter-Company Transfers
4. Inter-pollutant Transfers Combined with Inter-Company Transfers
5. International Trades of Current-Year Allowances
(a) Consumption Allowances
(b) Production Allowances
6. Transfers of Current-Year Allowances
7. Permanent Transfers of Baseline Allowances
8. Offset for a Transfer of Allowances
H. Will Production for Export be Allowed After Each Phaseout?
1. Exports to Parties
2. Exports to Article 5 Countries
I. Will There Be a Petition System for Importing Used HCFCs?

1. Petition for Each Individual Shipment
2. Threshold Quantity Requiring a Petition
3. Information Requirements
4. Timing for Review of a Petition
5. Reasons for Issuing an Objection Notice
6. Petition and Non-Objection Letter to Accompany the Shipment
J. Will There be New Restrictions on Imports to and Exports from Specific Parties?
K. Will There Be Changes in Definitions?
1. Modifications
2. Additions
L. Will Other Regulatory Options Be Used to Control HCFCs?
1. Labeling
2. SNAP Approval and Restrictions
3. Non-Essential Products Ban
M. Will There Be Consumption Allowance Credits for Reductions of HCFC Production By-Products Regulated by Title VI?
N. What Will the Reporting and Recordkeeping Requirements Be?
1. Producers
2. Exporters
3. Transformation and Destruction
4. Heels
IV. Administrative Requirements
A. Executive Order 12866
B. Executive Order 13045: Children's Health Protection
C. Executive Order 13132: Federalism
D. Executive Order 13175: Consultation and Coordination with Indian Tribal Governments
E. Executive Order 13211: Energy Effects
F. Congressional Review Act
G. National Technology Transfer and Advancement Act
H. Paperwork Reduction Act
I. Regulatory Flexibility Act (RFA), as amended by the Small Business Regulatory Enforcement Fairness Act of 1996 (SBREFA), 5 U.S.C. 601 *et. seq.*
J. Unfunded Mandates Reform Act

I. Regulated Entities

The HCFC allowance allocation system will affect the following categories:

Category	NAICS code	SIC code	Examples of regulated entities
Chlorofluorocarbon gas manufacturing	325120	2869	Chlorodifluoromethane manufacturers; Dichlorofluoroethane manufacturers; Chlorodifluoroethane manufacturers
Chlorofluorocarbon gas importers	325120	2869	Chlorodifluoromethane importers; Dichlorofluoroethane importers; Chlorodifluoroethane importers.
Chlorofluorocarbon gas exporters	325120	2869	Chlorodifluoromethane exporters; Dichlorofluoroethane exporters; Chlorodifluoroethane exporters
Polystyrene foam product manufacturing	326140	3086	Plastics foam Products (Polystyrene Foam Products)
Urethane and other foam product (except polystyrene) manufacturing.	326150	3086	Insulation and cushioning, foam plastics (except polystyrene) manufacturing

This table is not intended to be exhaustive, but rather provides a guide for readers regarding entities likely to be regulated by this action. This table lists the types of entities that EPA is now aware could potentially be regulated by this action. Other types of entities not listed in this table could also be affected. To determine whether your facility, company, business organization, etc., is regulated by this action, you should carefully examine these regulations. If you have questions regarding the applicability of this action to a particular entity, consult the person listed in the **FOR FURTHER INFORMATION CONTACT** section.

II. Background

A. How Do the Montreal Protocol on Substances That Deplete the Ozone Layer and the U.S. Phase Out HCFCs?

In 1990, the Parties to the Protocol identified HCFCs as transitional substitutes for CFCs and other more destructive ODSs (ozone-depleting substances). In 1992, the Parties created a detailed phaseout schedule for HCFCs, with a cap on consumption for Article 2 (industrialized) countries like the U.S. The Protocol defines consumption as production plus imports minus exports. The consumption cap is derived from the formula of 2.8 percent of the Party's CFC consumption in 1989, plus the Party's consumption of HCFCs in 1989. Based on this formula, the consumption cap for the U.S. is 15,240 ODP-weighted metric tonnes, effective January 1, 1996.

The Parties created a schedule with graduated reductions and the eventual phaseout of the consumption of HCFCs. The schedule calls for a 35 percent reduction of the cap in 2004, followed by a 65 percent reduction in 2010, a 90 percent reduction in 2015, a 99.5 percent reduction in 2020, and a total phaseout in 2030. The U.S. must comply with this phaseout schedule under the Protocol.

In 1992, EPA was petitioned by environmental groups and industry to implement the required phaseout by eliminating the most ozone-depleting HCFCs first. Based on the available data at the time, EPA believed that the U.S. could meet, and possibly exceed, the required Protocol reductions through the chemical-by-chemical phaseout. In 1993, as authorized by Section 606 of the Clean Air Act Amendments of 1990 (CAA), the U.S. established a phaseout schedule that will eliminate HCFC–141b, HCFC–22, and HCFC–142b first (58 FR 65018, December 10, 1993; 58 FR 15014, March 18, 1993).

In 1999, the Parties agreed to a cap on HCFC production for industrialized countries, effective January 1, 2004. This cap was derived from the average of the Party's consumption cap (2.8 percent of the Party's CFC consumption in 1989, plus the Party's HCFC consumption in 1989) and the result of the same formula for production (2.8 percent of the Party's CFC production in 1989, plus the Party's HCFC production in 1989). This formula results in a U.S. production cap of 15,537 ODP-weighted metric tonnes. As authorized by Section 606 of the CAA, EPA is adopting provisions in today's rule that are consistent with that production cap.

B. What Sections of the Clean Air Act Apply to This Rulemaking?

Five sections of the CAA apply to this rulemaking. Section 602 requires that EPA publish a list of class II controlled substances. This list appears in 40 CFR part 82, subpart A, Appendix B. Since publication of the initial list, no new substances have been added to the list. Section 602 also requires that EPA assign ozone-depleting potentials (ODPs) to all class II controlled substances. Appendix B to part 82, subpart A in the regulatory text of this document lists class II controlled substances and their corresponding ODPs as currently specified by the Protocol.

HCFC reporting requirements mandated in Section 603 were in 40 CFR 82.13(n) and (o) but have been removed. Recordkeeping requirements and amended reporting requirements have been placed instead in 40 CFR 82.24.

Section 605 of the CAA requires EPA to promulgate regulations to phase out the production and consumption and restrict the use of HCFCs in accordance with the schedule set forth in that

section and subject to any acceleration as authorized by Section 606.

Section 606 allows for acceleration of the phaseout of ODSs based on a decision by EPA or to conform to any acceleration under the Protocol.

Section 607 of the Act requires EPA to permit the transfer of any class II allowances on an ODP-weighted basis with an offset. The transfer plus the offset must result in greater total reduction in production in that year than would otherwise occur, to provide an environmental benefit.

Section 616 allows the U.S. to transfer allowances to another Party under certain conditions. Although the language in paragraph 5 bis of Article 2 of the Protocol restricts the U.S. from trading away HCFC consumption allowances to another Party because of the U.S. per capita consumption of CFCs in 1989, it is possible for the U.S. to trade production allowances.

III. Discussion of Comments on the July 20, 2001, Notice of Proposed Rulemaking (NPRM)

EPA published an NPRM on July 20, 2001, proposing an allowance allocation system and a petition process for HCFC–141b (66 FR 38064). Thirty-three comments were filed in Docket A–98–33 and fourteen of the forty attendees spoke at the public hearing held on August 27, 2001, in Washington, DC. The comments that arrived after the close of the comment periods were filed in the docket. Five producers and three importers were among the commenters; at times the producers who are also importers commented as members of the second group. Sixteen of the commenters were either distributors or users of HCFCs and four commenters were trade associations representing producers, importers, users, or a combination of the three. Four of the companies had more than one representative send in comments.

For a more detailed discussion of the options for an allowance allocation system that led to the proposal, refer to the ANPRM (Advance Notice of Proposed Rulemaking) published April 5, 1999 (64 FR 16373).

A. Will Production and Consumption Allowances Be Available?

EPA created a unit of measure called an allowance to control production and consumption of class I substances and made it equal to one kilogram of the ODS. An allowance represented the marketable rights and privileges granted to a company to produce or import a specific quantity of the specific substance. There were two types of allowances: production allowances and consumption allowances.

In the allowance system for class I ODSs, a company was required to expend both production and consumption allowances to be able to produce. A company was required to expend consumption allowances to be able to import. Consumption allowances were refunded or returned to the exporting company for future use in the same calendar year after EPA received proper documentation reflecting an export.

EPA proposed to use both production and consumption allowances in the HCFC allowance system. EPA proposed requiring a company to expend both consumption and production allowances to be able to produce HCFCs. To be able to import, EPA proposed requiring a company to expend consumption allowances. EPA proposed that after submitting the proper documentation verifying an export, the company would be refunded consumption allowances. Besides seeking comment on the inclusion of production and consumption allowances in an HCFC allowance system, EPA also requested comment on the potential value of an allowance. The proposal asked for comment on the potential value of an allowance and whether it would take into account the differing ozone depletion potentials of each HCFC and each HCFC's impending phaseout date.

Only two commenters chose to mention production and/or consumption allowances. One commenter generally supported having production and consumption allowances in the HCFC allowance system. The other commenter was only concerned about production allowances for HCFC–141b.

With today's action, EPA is including consumption and production allowances in the HCFC allowance system for several reasons. The consumption cap that is already in place and the production cap that will be effective in 2004 necessitate the allocation of both types of allowances. Because many companies receiving allowances are familiar with the class I system of allowances, EPA believes their experience with the class I system will simplify the management of the class II allowance system. EPA is also requiring a company to expend both consumption and production allowances to be able to produce. To be able to import, EPA is requiring a company to expend consumption allowances. EPA is requiring a company to submit the proper documentation to EPA to verify an export for the refund of the consumption allowances associated with the quantity of HCFC exported.

B. Will Allowances Be Tracked Chemical-by-Chemical?

As in the class I allowance system, EPA is assigning each allowance a value of one kilogram of a class II controlled substance. To produce or import, companies will expend allowances by kilograms.

EPA proposed instituting a chemical-by-chemical absolute kilogram system for allocating and transferring allowances rather than an ODP-weighted approach. Of the ten commenters who commented on this issue, five were in favor of the ODP-weighted approach and five in favor of the chemical-by-chemical approach. One of the commenters favoring the chemical-by-chemical approach believed that it was the simplest for accounting purposes and would provide EPA with the least amount of recordkeeping. This commenter also believed that it provided less chance of error from a company using the wrong formula to convert ODP weighting between chemicals. Flexibility in trading allowances was an important concern for all the commenters. Three of the commenters supporting the ODP-weighted system felt the chemical-by-chemical system would be acceptable as long as maximum flexibility in trading was retained.

Since the U.S. is implementing the phaseout on a chemical-by-chemical basis as discussed in the proposal, EPA will need to monitor production and consumption of each chemical. As one commenter pointed out, a ''chemical-by-chemical allowance system will promote chemical-by-chemical recordkeeping and reporting.'' A more detailed discussion of the need for a chemical-by-chemical approach is contained in the proposal.

EPA is establishing the chemical-by-chemical absolute kilogram system to allocate and transfer allowances in the HCFC allowance system. The production of one kilogram of HCFC would require the expenditure of one production allowance and one consumption allowance. The import of one kilogram of HCFC would require the expenditure of one consumption allowance.

Part of the flexibility included in the HCFC allowance system in response to the commenters' concern about ease of transferring allowances is EPA's decision not to group HCFCs (Section III.G.1). Class I substances were grouped and transfers were only permitted among class I substances in the same

group. With today's action, allowance holders may trade allowances among HCFCs. The offset EPA has selected to impose on transfers should not be a burden or hinder the flexibility of the system (Section III.G.8).

C. Will Allowances Be Distributed on a One-Time Basis?

EPA proposed allocating HCFC allowances on a one-time basis. This would mean the allocations would remain the same from control period to control period (one calendar year to the next) until each chemical is phased out or until the percentage of baseline allowances is reduced to ensure compliance with the Protocol cap. Only through permanent transfers of allowances would a company's baseline allocation be changed.

Of the eight commenters on this issue, seven were in favor of a one-time allocation. One commenter believed that a one-time distribution of allowances is the simplest allocation method from both the EPA's and the company's perspective. Many of those that favored a one-time allocation expressed a concern that the long-term use of one-time allocations would not adequately reflect future market needs.

One commenter proposed that EPA allocate on a year-by-year or period-by-period basis, with each period covering 2–3 years. EPA believes that both of these methods would create much uncertainty in the industry and require constant readjustment of baselines by EPA and industry. EPA believes that a year-by-year allocation would hamper allowance holders' long-term planning for production or import. EPA also believes that allocating every two or three years would only be a minor improvement over the year-by-year method and create administrative burden for both the Agency and industry. Therefore, EPA is not adopting either of these methods.

One producer noted the critical need for reallocation prior to 2010 for on-going service needs for equipment manufactured prior to December 31, 2009. This commenter favored a one-time allocation of the full 10 percent permitted at least one year prior to the 2010 phaseout date. EPA recognizes the need to determine the allocation level for the 2010 reduction step in HCFC–22 and HCFC–142b allowances and will monitor the market to determine the quantity needed for servicing equipment manufactured before December 31, 2009. EPA intends to achieve this reduction step through notice and comment prior to 2010 and will likely implement the reduction by simply listing a percent of baseline allowances to be granted in Section 82.16 for years after 2009.

EPA proposed distributing baseline allowances for all HCFCs but believes that the continuously developing HCFC market would be hampered by such a distribution. Many commenters favored changing the baseline allocations at some future date to reflect shifts in the market. EPA is therefore distributing baseline HCFC allowances only for HCFC–141b, HCFC–22 and HCFC–142b on a one-time basis. The reductions and phaseout of these three HCFCs are earlier than for the other HCFCs because they are more damaging to the ozone layer. EPA believes that the HCFC market may continue to evolve and that some sectors may switch from the higher ozone-depleting HCFCs, such as HCFC–141b, HCFC–22, and HCFC–142b to the lower ozone-depleting HCFCs, such as HCFC–123, HCFC–124, and HCFC–225ca and HCFC–225cb. EPA believes that the current market proportions of these lower-ODP HCFCs do not reflect the needs of a rapidly expanding market and that distributing allowances for these HCFCs at this time would unnecessarily restrict their supply and impede transitions to less ozone-depleting substances. EPA intends to continue to monitor the market trends as more users transition to less ozone-depleting HCFCs and as more non-ozone-depleting alternatives become available.

D. Will 100 Percent of the U.S. Cap Be Allocated?

EPA proposed allocating 100 percent of historical HCFC activity in the U.S. after determining that the aggregate of each individual company's highest consumption and production would be below the caps.

Thirteen commenters agreed that EPA should allocate at least 99 or 100 percent of the consumption and production caps to maximize the available material to meet the needs of the marketplace. Producers, importers, and users were unanimous in this respect. They believed that allocating less could result in artificial shortages or increase the price of HCFCs. Three of the commenters had no objection to allocating allowances to new entrants or narrow post-phaseout uses of HCFC–141b but felt that the remaining allowances under the cap should be reallocated. They argued that not allocating those allowances would leave a shortfall in the marketplace and place unnecessary pressure on users.

One importer believed that EPA should determine a fair allocation to eligible late entrants and then determine if this method provided an equitable allocation before allocating 100 percent of baseline consumption. This commenter believed that small and disadvantaged businesses did not have the economic resources of the larger multinational companies, especially the producers. According to the commenter, such small businesses would have the ability to continue their business and meet their business plan if they receive an equitable allocation.

1. Consumption Allowances

EPA proposed allocating 100 percent of each company's historical consumption as the baselines for all class II controlled substances and reserving the remaining amount above these aggregate baselines and below the cap for eligible late entrants into the HCFC market and as credits for reductions of substitutes regulated under Title VI that are created as by-product(s) in the manufacture of HCFCs (Section III.M). EPA proposed that new entrants would be small businesses that began importing after the end of 1997 and before April 5, 1999, the date of publication of the ANPRM. EPA believes that such small businesses might not have been aware of the impending rulemaking that would affect their ability to continue in the HCFC market.

Although all commenters indicated a preference for allocating 100 percent of the allowances under the consumption cap, some were willing to grant allowances to late entrants and narrow post-phaseout uses of HCFC–141b. A commenter from the user community of HCFCs had no objection to allocating to new entrants but felt that the remaining allowances after that allocation is completed should be distributed to avoid unnecessary pressure on users. Another commenter from the same community suggested a formula for distributing remaining allowances under the cap after the need for narrow post-phaseout uses of HCFC–141b was satisfied. That same commenter also felt that the amount for narrow post-phaseout uses of HCFC–141b should not exceed 2 to 5 percent. None commented on credits for reductions of substitutes regulated under Title VI that are created as by-product(s) in producing HCFCs. There were also no commenters on the possibility of auctioning off the remaining allowances. Most commenters were in favor of re-allocating the remaining allowances to listed allowance-holders.

With today's action, EPA is allocating up to 100 percent of the U.S. consumption cap by allocating consumption allowances to listed individual companies only for HCFC–

141b, HCFC–22, and HCFC–142b. Included in today's allocation are allowances for a new entrant to the HCFC market in accordance with the proposal. EPA is allocating the full amount of the U.S. consumption cap by distributing allowances on a pro-rata basis to the listed allowance-holders above their highest historical consumption and after the needs of new entrants have been addressed. EPA will not reserve any allowances as credits for reductions of substitutes regulated under Title VI that are created as by-product(s) in producing HCFCs.

EPA will continue to monitor HCFC market trends and consider whether to adjust the allowance allocations through notice and comment rulemaking to ensure the U.S. meets its obligations under the Protocol.

2. Production Allowances

Using the formula agreed to by the Parties in 1999 for calculating the production cap, U.S. production would be frozen at 15,537 metric tonnes through the various phaseout years beginning with 2004. The United States' formal obligation to comply with the cap would begin following Senate ratification of this change to the Protocol and the deposit of the U.S. instrument of ratification with the United Nations. Today's rule avoids any actions that would be inconsistent with this obligation. If the Parties change the current provisions associated with the production cap, EPA will amend its regulations to reflect any changes in U.S. obligations under the Protocol.

Since the aggregate of each company's historical production is below the production cap, EPA proposed allocating 100 percent of each company's historical production level as the baseline for production allowances. One producer who noted that the aggregate of production baselines was well below the production cap proposed using the difference between the aggregate and the cap solely for HCFC–141b because the commenter felt the HCFC–141b sector is clearly under-served versus current market demand. Since EPA anticipates the need to allocate allowances for narrow post-phaseout uses of HCFC–141b, EPA is establishing a petition process for HCFC–141b exemption allowances, as discussed below in Section E. The quantity of HCFC–141b exemption allowances that will be allocated for narrow post-phaseout uses will be determined after review of the petitions.

Nine commenters were concerned about what would happen if a producer chose not to use all of its allowances or decided to permanently discontinue production of an HCFC. Three were in favor of retiring unused allowances. Some of these commenters believed a company that restricted production in order to create a larger market share for an alternative would receive a financial windfall. By discontinuing production, a company could create a larger market share for a higher-priced alternative it preferred to promote. They also felt that granting allowances to a company that had ceased production meant rewarding the company with marketable assets it did not deserve. These commenters were concerned that allowing a company to hold back its allowances could create HCFC shortages and price increases. Six were in favor of reallocating the unused allowances to the remaining allowance holders of that specific HCFC to prevent market shortages or price increases. One commenter also suggested that any unused HCFC–141b production allowances should be reallocated on a pro-rata basis among HCFC–141b allowance-holders rather than among all HCFC allowance-holders.

Since baselines were determined on the basis of the highest historical production for each company in the years 1994 through 1997, EPA believes that allocating to all the companies active in those years will provide a potential supply of HCFCs that exceeds the historical demand but that most accurately reflects the true HCFC market in the United States during that period. Although the Agency proposed allocating each company its highest production during the particular years, resulting in an aggregate U.S. production less than the U.S. cap, with today's action EPA is allocating each company an additional pro-rata amount above their highest historical production which brings the U.S. aggregate allocation up to and equal to the cap. Because allocating allowances up to the cap should ensure a more than adequate supply of HCFCs, EPA is not including provisions in today's action that would require reallocation of production allowances that have not been used. Finally, today's action makes allowances easily tradable with minimal regulatory interference and oversight, thereby encouraging companies to make business decision as they would in an unregulated industry.

Because production will be frozen at a constant level throughout the various phaseout years, EPA is granting export production allowances so that U.S. producers can manufacture and export the phased-out HCFCs following the respective production phaseouts. Beginning January 1, 2004, export production allowances can only be used to produce for export either to: (1) Parties listed in Appendix L who are also listed in Appendix C as having ratified the Beijing Amendments or (2) Parties not listed in Appendix L that are listed in Appendix C as having ratified the Copenhagen Amendments. Prior to January 1, 2004, there is no HCFC trade restriction under the Montreal Protocol. A more detailed discussion concerning the allocation and expending of export production allowances can be found in Section III.H. below.

E. Will There Be HCFC–141b Exemption Allowances for Continuing Needs?

1. Who May Submit a Petition for HCFC–141b Exemption Allowances Beyond January 1, 2003

On July 20, 2001, EPA proposed to provide space vehicle/defense allowances for HCFC–141b to a U.S. agency, department or instrumentality, or related entities involved in space vehicle endeavors. EPA proposed allocating these exemption allowances for extremely narrow needs after a demonstration by petition to EPA that no viable alternative exists for HCFC–141b and that space vehicle or national security viability is at issue if HCFC–141b cannot be used for the specified purpose (66 FR 38064). EPA also proposed to provide allowances to U.S. military departments for extremely narrow needs after a demonstration by petition to EPA that no viable alternative exists for HCFC–141b in narrow defense uses such as cleaning of oxygen equipment and aircraft parts. Based on information provided to the Agency prior to the proposal, through comments on the ANPRM published in the **Federal Register** on April 5, 1999 (64 FR 16373), EPA believed that the National Aeronautics and Space Administration (NASA), the U.S. Air Force, and the U.S. Navy were the only entities with continuing needs for HCFC–141b beyond January 1, 2003.

Because no other sectors submitted comments to the ANPRM identifying technical constraints of transitioning from HCFC–141b to alternatives, the Agency believed that technically feasible alternatives would be available for other uses and did not propose post-phaseout allowances for any other uses of HCFC–141b. However, through comments on the NPRM on July 20, 2001 (66 FR 38064) and as part of a separate action under the Agency's Significant New Alternatives Policy (SNAP) program (65 FR 42653), EPA received information to suggest that certain polyurethane foam applications, such as spray foam used for roof and wall insulation, have technical

constraints that may impede their transition away from HCFC–141b by January 1, 2003. To address these concerns and any unforeseen need for HCFC–141b, two commenters recommended that EPA allow any entity to petition the Agency for HCFC–141b allowances beyond January 1, 2003. EPA could then, on a case-by-case basis, evaluate the petitioner's assertions that no viable alternatives are available to meet the needs of that specific petitioner. With today's action, EPA agrees with comments indicating there may be legitimate needs for limited HCFC–141b production and import beyond January 1, 2003 for non-space/defense applications. Therefore, EPA is expanding the petition process to also include any HCFC–141b formulator who can identify technical constraints in transitioning from HCFC–141b to alternatives. In § 82.3, EPA is defining formulator as an entity that distributes a class II chemical(s) or blends of a class II chemical(s) to persons who use the chemical(s) for a specific application identified in a petition for HCFC 141-b exemption allowances. Further, in order to reflect the expansion of the petition process, EPA is using the term ''HCFC–141b exemption allowance'' in the final rule in lieu of ''space vehicle/defense allowance.'' EPA is adding a definition of ''HCFC–141b exemption allowance'' to § 82.3.

Although EPA is creating a process to allow any HCFC–141b formulator to petition for production or import allowances for HCFC–141b beyond January 1, 2003, the Agency believes that there will be a small number of petitioners with legitimate claims that there are no technically viable and commercially available alternatives to HCFC–141b beyond January 1, 2003. EPA believes that some petitioners in the following categories are most likely to meet the criteria established in today's rulemaking:

- A U.S. agency, department or instrumentality, or related entities involved in space vehicle endeavors;
- U.S. military departments for defense uses such as cleaning of oxygen equipment and aircraft parts; and
- Some formulators that produce polyurethane foam systems for use in insulating spray and pour foam applications.

Each individual petitioner must provide a clear and specific justification for needing access to HCFC–141b production or import beyond January 1, 2003. The Agency will accept and review annual submissions of petitions which will provide up-to-date information on HCFC–141b needs. As described in more detail below, the petitioner must provide adequate documentation to prove that alternatives are not technically viable, and that stockpiled HCFC–141b is not technically or commercially available (for example, taking into consideration undue costs for storage and transportation) to meet their transitional needs.

2. Definition of ''Space Vehicle''

Several commenters asked EPA to define ''space vehicle'' in order to clearly establish what is covered under ''space vehicle endeavors''. These commenters asked the Agency to adopt an existing definition established at 40 CFR 63.742 for the National Emissions Standards for Hazardous Air Pollutants (NESHAP) program. That definition, which was established specifically for the NESHAP for Aerospace Manufacturing and Rework Facilities, is:

> Space vehicle means a man-made device, either manned or unmanned, designed for operation beyond earth's atmosphere. This definition includes integral equipment such as models, mock-ups, prototypes, molds, jigs, tooling, hardware jackets, and test coupons. Also included is auxiliary equipment associated with tests, transport, and storage, which through contamination can compromise the space vehicle performance.

To establish a consistent definition, EPA agrees with the proposed language and has included it with other definitions in § 82.3 of this final rule. However, because this definition encompasses a broad spectrum of equipment and/or applications, EPA would like to emphasize that HCFC–141b exemption allowances will only be granted for particular uses where HCFC–141b alternatives have not been developed to meet the technical demands of the specific space vehicle application (*e.g.,* foam blowing agent for thermal protection system needs of space vehicles designed to travel beyond the limit of the earth's atmosphere). As discussed in more detail below, the technical constraints of the specific application must be described in detail in the petition.

3. Definition of ''Formulator''

In § 82.3, EPA has also defined ''formulator'' so that it is clear who may petition the Agency for HCFC–141b exemption allowances beyond January 1, 2003. A ''formulator'' is an entity that distributes a class II controlled substance(s) or blends of a class II controlled substance(s) to persons who use the controlled substance(s) for a specific application identified in the formulator's petition for HCFC–141b exemption allowances. In all the HCFC–141b uses EPA is aware of, the formulator is responsible for meeting the testing and code requirements as opposed to the end user. Therefore, in order to reduce the burden of petitioning, EPA designed the process so the end user does not apply for the exemption allowance. The petitioners should either be the intermediary who blends the HCFC–141b and sells it to an end user or in cases where the end use application employs just the HCFC–141b directly, the petitioner should be the chemical manufacturer. Formulators include system houses who produce polyurethane foam systems for use in spray and pour foam applications. A foam system typically consists of two transfer pumps that deliver the ingredients (polyisocyanate from one side and a mixture including the blowing agent and stabilizers from the other side) to a metering/mixing device which allows the components to be delivered in the appropriate proportions. The components are then sent to a mixing gun and dispensed as foam directly to a surface such as a roof or tank. Spray foam is a polyurethane or polyisocyanurate cellular plastic which is applied as an atomized liquid or froth directly onto a substrate using commercial spray foam equipment specifically designed for this purpose. This liquid or froth begins to react, rise, and form its cellular structure in place on the substrate in typically less than 1–2 seconds after it is applied. Spray foam is generally used as a thermal insulation, floatation aid or air infiltration barrier.

Spray and pour foam applications account for approximately 20% of the HCFC–141b used in 2001. The spray foam sector of the polyurethane industry is a diverse sector that involves an array of applications including: Roofing, building envelope insulation, agriculture tanks, pipes and vessels, marine and original equipment manufacture (OEM). The pour foam sector of the polyurethane industry is also a diverse sector that involves an array of applications including: Commercial refrigeration (such as walk-in coolers but not consumer refrigeration), doors (such as entry doors or garage doors), refrigerated transport, picnic coolers, vending machines, commercial and residential architectural panels, tank and pipe insulation, marine flotation foams, floral foam, and taxidermy foams.

Because formulators produce polyurethane systems for a wide array of applications, EPA would like to emphasize that HCFC–141b exemption allowances will only be granted where a petitioner can demonstrate that stockpiled quantities of HCFC–141b

produced prior to January 1, 2003 are not or will not be available in sufficient quantities and the HCFC–141b alternatives have not yet been developed to meet specific technical constraints within a particular application (*e.g.,* spray foam for roofing applications).

The definition of ''formulator'' will also cover manufacturers that blend and package pressurized aerosol solvents. Although HCFC–141b is illegal in most non-aerosol solvent applications, it is an acceptable substitute as an aerosol solvent in certain cleaning applications and as a mold release agent. One commenter expressed concern with the timing of the HCFC–141b phaseout and the ability of aerosol solvent packaging companies to transition. EPA believes that sufficient alternatives are available for these applications in general and that it is unlikely that a petitioner would be able to demonstrate that they meet the criteria established under § 82.18 for additional HCFC–141b production/import beyond January 1, 2003. However, EPA believes it is appropriate to keep the petition process open to users of HCFC–141b as an aerosol solvent so that the Agency can address any need that may arise in the aerosol solvent end use. Furthermore, given the definition of formulator, EPA recognizes there might be other niche applications not specifically covered by SNAP that could legitimately petition and qualify for the HCFC–141b exemption. Thus, the petition process is open to other formulators of products containing HCFC–141b, enabling EPA to evaluate and address the various needs across multiple sectors in the most effective manner.

4. Petition Process To Include All HCFC–141b Formulators

EPA believes it is appropriate to open the petition process for all formulators of HCFC–141b. This will provide all HCFC–141b users an equal opportunity to demonstrate their need for an ''HCFC–141b exemption allowance.'' At this time and based on the information the commenters provided, the Agency believes that entities involved in space vehicle endeavors, U.S. military departments that use HCFC–141b for defense-related applications, and formulators within the spray polyurethane foam sector are likely to have the clearest need for ''HCFC–141b exemption allowances.''

In response to the HCFC allowance allocation proposal published on July 20, 2001 (66 FR 38081), EPA received requests for an extension to the HCFC–141b phaseout for the spray and pour polyurethane foam sector. EPA received seven comments on the continued need for HCFC–141b in this sector past the production and import ban effective January 1, 2003. Reasons given for such an extension were: (1) Lack of commercially viable alternatives; (2) minimal environmental impact; (3) the same consideration as the space vehicle/defense entities that requested an exemption; (4) availability of production and consumption allowances under the cap; (5) inability of small businesses to stockpile; and (6) the results of the Caleb Management Services report (discussed below).

EPA also received comments from spray and pour foam manufacturers as part of a separate action under the Agency's Significant New Alternatives Policy (SNAP) program (65 FR 42653). In that action, EPA proposed a variety of restrictions on the use of HCFCs in foam end-uses.

A final rule was published on July 22, 2002, under the SNAP program (67 FR 47703). In response to comments on the proposal, the Agency gathered additional information on certain sectors. The Agency published a Notice of Data Availability (NODA) on May 23, 2001, making the new information pertaining to the foam industry available for public comment (66 FR 28408). The NODA included a review of the challenges facing the polyurethane spray foam industry and other systems house based applications (Air Docket A–2000–18, IV-D–78). This review was conducted by an EPA consultant who was hired to assess HCFC foam sector usage in the U.S. and determine the technical viability of alternatives in those applications (Caleb Management Service report). The Caleb report identified some technical hurdles faced by some current HCFC–141b users in spray and pour foam applications.

As with other insulation, spray foam products must meet product-specific standards which in turn are cross-referenced into the various building codes operated across the country. Technical considerations for final products in the spray and pour foam sectors include thermal performance, durability, density, cell structure (open vs. closed), finish, surface adhesion, and dimensional stability of the foam along with its ability to meet fire codes. Technical challenges that are unique to this sector are a function of the ambient conditions under which spray (and sometimes pour) foam are applied. These ambient conditions result in the potential need for special equipment and a wide array of formulations to meet different ambient conditions and the variety of end-use applications. Extensive field trials are also needed to ensure that foam can be applied properly and that it will maintain its structure and thermal insulation value over time. Re-formulating and testing is typically done by each systems house. Systems houses are relied upon for much of the technical expertise and support provided to on-site contractors and others in the sector.

There are approximately 15–20 U.S. systems houses that formulate spray foam systems for roofing contractors and other customers that number in the thousands. Several systems house companies are large businesses, but many are small businesses. Although EPA believes that alternatives to HCFC–141b are currently or potentially available for spray foam applications, some smaller systems houses may need more time to develop and fully test these next-generation spray foam alternatives, especially for roofing applications where durability over multiple seasons has to be evaluated. Therefore, by opening the petition process up to formulators of HCFC–141b, the Agency is providing the smaller systems houses with flexibility so that diligent efforts can be taken, where needed, to test the next generation products, meet building codes and fire tests, and to have commercially available products. However, the Agency is committed to facilitating the transition away from ozone-depleting compounds as quickly as possible. Timing is discussed in more detail below.

Pour foam systems are also developed by systems houses. Some pour foam applications have thermal performance requirements similar to spray foam. Also, like spray foam systems, pour foam products tend to be sold in drums or other containers where the isocyanate is kept separate from the blowing agent and other ingredients (systems). However, there are some significant distinctions between the two end-uses. For example, some applications in these sub-segments are factory-controlled (e.g., commercial refrigeration) which means greater potential for making a liquid to gaseous transition or implementing hydrocarbon alternatives. Additionally, many pour foam applications do not have rigorous product requirements such as thermal insulation value, or extended field tests under ambient conditions.

Given the broadening of the petition process and development of the HCFC–141b exemption allowances, EPA recognizes that some formulators may petition the Agency for additional HCFC–141b in pour foam applications because their ability to use the same equipment in mixing spray and pour

formulas is central to their operations. However, EPA does not believe that the technical constraints that arise from product requirements and field application of spray foam also necessarily apply to pour foam applications. For example, although buoyancy foam may demonstrate very similar application constraints and concerns as spray foam, there is no thermal requirement associated with buoyancy foam, and field trials of new formulations over several seasons are not required. Many companies with pour foam applications have already made transitions from HCFC–141b to gaseous blowing agents such as HFC–134a, HCFC–22 and HCFC–22/142b blends, and liquid blowing agents such as hydrocarbons and water. Nonetheless, EPA will consider petitions for pour foam and other HCFC–141b applications because, within the wide range of end-uses, there may be HCFC–141b users who currently have technical constraints in transitioning from HCFC–141b to non-ozone-depleting alternatives. EPA believes that it is appropriate to allow these formulators to demonstrate their needs. If formulators within these or other applications can demonstrate that they have not had access to and/or have been unable to fully implement ozone-friendly alternatives to meet their thermal or dimensional performance, flammability control or other product requirements, and they meet the criteria established in § 82.18, EPA will grant a limited quantity of HCFC–141b exemption allowances for a limited time.

5. Information Supporting Decision to Expand the Petition Process

All of the information can be obtained through EPA's Air Docket (see Addresses section above for docket contact info). Please refer to Air Docket A–98–33 when seeking supporting documents.

Allocation Rule: Comments on the space vehicle/defense petition process and other HCFC–141b users' needs for HCFC–141b beyond January 1, 2003. *Air Docket:* A–98–33: IV–D–07, IV–D–09, IV–D–14, IV–D–18, IV–D–26, IV–D–27, IV–D–30, IV–D–32, IV–F–03, IV–F–05, IV–G–01, IV–G–02, IV–G–03, IV–G–04.

SNAP Rule: Pre-proposal letters, Comments to the July 11, 2000 SNAP proposal (65 FR 42653), Notice of Data Availability (NODA) published on May 23, 2001 (66 FR 28408) and comments to the NODA. Air Docket: A–98–33, IV–D–66.

Other Correspondence: The Agency received a variety of additional correspondence commenting on the issue of the HCFC–141b phaseout on January 1, 2003, and a possible extension and/or exemption. A specific request for an extension to the HCFC–141b phaseout was submitted to the Agency by Polythane Systems, Inc. As part of this request, the commenter asserted that a combination of factors would prevent their company, as well as others in the pour and spray foam industry, from being able to transition from HCFC–141b by January 1, 2003. These factors include safety and flammability concerns and unavailability of sufficient test quantities of alternative blowing agents, the need for several years of field testing of new roof technologies to ensure adequate performance, and economic and logistical constraints in accessing stockpiled quantities of HCFC–141b. Many letters in support of the Polythane Systems, Inc. request were sent to EPA by individual companies and Congressional representatives. *Air Docket:* A–98–33: IV–D–35 to IV–D–64 and IV–G–06, IV–G–07, IV–G–08, IV–G–09.

6. Reason for Petition Process

Of the seven commenters to the proposal who addressed continued use of HCFC–141b, five favored a broad extension of the phaseout date for HCFC–141b until proven cost-effective alternatives are available. Some commenters suggested that HCFC–141b be phased out later than 2003 and suggested that 2004, 2005, 2020, or 2029 be the new phaseout date. Others suggested no phaseout date at all. Two commenters indicated a preference for granting an exemption to the spray and foam polyurethane sector after January 1, 2003, by providing allowances modeled after the space vehicle/defense allowances proposed in the July 20, 2001, rule.

In light of these comments, EPA considered whether it was appropriate to extend the phaseout, grant an industry-wide exemption or provide an exemption modeled after the space vehicle/defense petition process proposed. After considering these options, EPA maintains that it is inappropriate to change the January 1, 2003 phaseout date established in 1993 or grant an industry-wide exemption for the spray/pour foam industry. Within the spray and pour foam industry there are disparities between those who have had access to alternatives and resources to implement alternatives in a timely fashion and those who have faced legitimate technical hurdles because they have not had access to alternatives. Additionally, there are numerous end-use applications within this industry and HCFC–141b may be needed in some applications and not in others. EPA does not believe it is appropriate to provide an industry-wide exemption to accommodate those specific companies and/or end-uses that may need a limited amount of HCFC–141b, for a limited time. Further, EPA does not believe an industry-wide exemption would guarantee that small users with technical constraints would have access to the HCFC–141b produced after January 1, 2003, because they would be forced to compete with other companies for a limited amount of HCFC–141b. Also, EPA believes that an industry-wide exemption limited to the spray and pour foam industry would not provide for unforeseen needs for HCFC–141b in other sectors. Finally, hundreds if not thousands of companies have been relying on the phaseout date for HCFC–141b for nearly 10 years and have made investments accordingly. EPA believes that changing that date would be unfair to those companies who have invested in the transition from HCFC–141b.

EPA believes that expanding the petition process in today's rule provides access to additional HCFC–141b beyond January 1, 2003 for legitimate needs.

7. Total Quantity for Exemption

EPA proposed (July 20, 2001) to limit the total quantity of the HCFC–141b exemption per year for space vehicle or narrow defense needs to one (1) percent of the aggregate of the U.S. HCFC–141b baselines. This reflected the expected small number of requests for small quantities from space vehicle/defense uses. Several commenters requested that EPA state the exact amount in order to clarify that their specific space vehicle/defense needs could be met. Because EPA is expanding the petition process in today's final rule, the Agency is not adopting its proposed limit on the amount of HCFC–141b that would be available for the space vehicle/defense needs. The quantity provided will be based on the needs of each petitioner as demonstrated through their petition (*see* § 82.18). The U.S. obligation under the Protocol is to control consumption [production + import − export], with a 35 percent reduction in the HCFC consumption cap beginning January 1, 2004. EPA will not authorize quantities of HCFCs under the exemption process that would cause the U.S. to exceed the HCFC consumption cap as agreed under the Montreal Protocol. If HCFC–141b requested in petitions exceeds the amount available under the cap, preference will be given to petitioners who can demonstrate the most vital

needs and the available amount may be allocated on a pro-rata basis.

8. How Long EPA Will Continue To Receive/Review Petitions

EPA proposed to create an exemption process for the continued production or import of HCFC–141b up to January 1, 2010 for applications related to critical space vehicle needs or narrow defense needs in cases where alternatives and stockpiled, recovered or recycled quantities are deemed to be technically infeasible for use. EPA believed that this was appropriate because the 65 percent reduction in consumption required by 2010 to meet U.S. obligations under the Montreal Protocol may preclude continued availability of the space vehicle/defense exemption beyond 2010. In the proposal, EPA stated that the availability of the exemption would be revisited in the rulemaking implementing the January 1, 2010 phaseout.

Space vehicle/defense commenters agreed that the 2010 time frame was reasonable as long as EPA adhered to the stated intention to revisit the possibility of providing exemptions beyond 2010 for space/vehicle and defense needs. Because these commenters indicated that they may need HCFC–141b beyond 2010, EPA has decided to withdraw this proposed end-date for the petition process for space/vehicle defense needs. Instead, the quantity that might be granted for space vehicle/defense needs will be analyzed during periodic petition reviews in light of available amounts under the U.S. Protocol cap. Although the 65 percent reduction in consumption required in 2010 may preclude continued availability of the space vehicle/defense exemption, EPA will consider the consumption figures when conducting case-by-case reviews of HCFC–141b petitions. Annual renewals of petitions will provide up-to-date information on HCFC–141b needs and EPA can compare continuing needs with the current consumption figures to determine whether it is appropriate to renew exemptions. This will provide sufficient assurance that HCFC–141b exemptions will not jeopardize U.S. compliance with Montreal Protocol requirements.

Although there may be additional need for HCFC–141b in space vehicle and defense applications up to and possibly beyond January 1, 2010, it is unlikely that other petitioners will be able to meet the criteria established under § 82.18 for more than 1 year beyond January 1, 2003. The only industries which have indicated need for HCFC–141b beyond January 1, 2003, are the spray and pour sectors of the foam industry, in particular small systems houses that develop spray and pour foam formulations. EPA believes that the large part of the spray and pour foam sector will be well into alternative development by January 1, 2003. Although there may be continuing research into new alternatives, much of the work is expected to be completed over the next year in developing potential systems for in-house trials, conducting preliminary fire testing and field testing, conducting additional fire testing to certify building code requirements, and finally observing field trials. Field trials could take 6 to 12 months or more.

In anticipation of the HCFC–141b phaseout, systems houses have been aggressively formulating foam systems and testing new foam products containing alternatives to HCFC–141b. Spray and pour foam products that meet all relevant thermal, flammability and other product requirements using HCFC–141b alternatives are commercially available today, such as foam for garage and entry doors, picnic coolers, refrigerated trucks, marine flotation foam, and water heaters. EPA recognizes that many (or all) of those products were developed on a proprietary basis and their existence does not imply that the industry as a whole has overcome all technical hurdles. However, EPA believes that the current availability of foam systems using several HCFC–141b alternatives supports the viability of those alternatives and that technical constraints will be a function of the timing of commercial availability of the alternatives rather than technical feasibility of the alternatives. With the exception of HFC–245fa, all of the SNAP approved alternatives to HCFC–141b have been commercially available in sufficient quantities for research and development for more than 5 years. Although HFC–245fa is only now becoming fully available on a commercial scale from a recently completed plant, EPA believes the spray and pour foam industries have had access to sufficient quantities of HFC–245fa for research, development, and testing purposes since early 2001 and in many cases before. Therefore, by 2004, EPA believes that most, if not all, formulators in this sector will have had sufficient time to test and implement alternatives.

EPA believes all or almost all formulators can have fully-approved commercially available foam systems using alternatives by the end of 2004. Because EPA cannot anticipate the specific constraints of every spray and pour foam formulator, EPA is not at this time establishing an end-date to the petition process for HCFC–141b exemption allowances. Instead, EPA will review petition renewals annually to determine whether it is appropriate to continue granting HCFC–141b exemptions based on technical need. As stated above, petition requests will be compared to current consumption figures to ensure that HCFC–141b exemptions will not jeopardize U.S. compliance with Montreal Protocol requirements.

9. Information To Be Submitted in a Petition

As proposed, EPA requires that the following information be submitted by petitioners: (a) Name and address of entity; (b) Name of contact person and phone and FAX number(s), and e-mail address; (c) quantity (in kilograms) of HCFC–141b needed for each relevant control period, supported by documentation about past use for at least the previous three years; (d) quantities of HCFC–141b, if any, contained in systems that were sold to other systems houses for at least the previous three years; (e) description of markets and applications being served by use of HCFC–141b; (f) technical description of processes in which HCFC–141b is being used; (g) technical description of the specific condition(s) under which the product will be applied; (h) technical descriptions of why alternatives and substitutes are not sufficient to eliminate the use of HCFC–141b; (i) amount of stockpiled HCFC–141b (on-hand, taken title to, or available from a supplier) along with an analysis showing why stockpiled, recovered or recycled quantities are deemed to be infeasible for use; (j) an estimate of the number of control periods over which such an exemption would be necessary; (k) description of continuing investigations into and progress on possible alternatives and substitutes. Petitioners should indicate what information they are claiming as Confidential Business Information. Information claimed as confidential will be treated in accordance with EPA's regulations on confidential business information at 40 CFR part 2 subpart B. EPA will notify petitioners of deficiencies and give them an opportunity to provide information needed to fully complete the petition. However, if petitioners do not respond to EPA's requests for additional information within 15 days of the request and the petition remains incomplete, HCFC–141b exemption allowances will not be granted. Petitioners should also be aware that

EPA will consider other available information such as the availability and technical and economic feasibility of stockpiles and the industry-wide progress on implementing alternatives when deciding whether to grant exemptions.

Although EPA is expanding the petition process beyond space vehicle/defense petitioners, the Agency believes that the items listed above will provide the information EPA needs to make individual decisions on granting additional HCFC–141b to petitioners taking into account their specific application. To avoid an overly burdensome process, EPA is not requiring this information to be submitted in any specific format nor does EPA expect petitioners to generate new information. The Agency published the rule establishing the January 1, 2003, phaseout date in 1993. Thus, HCFC–141b users should be able to demonstrate that they have been engaged for some time in the process of sourcing, testing and implementing alternatives in anticipation of the phaseout. Because of the many years that have elapsed since the phaseout date was established, the information needed to address the items above should be readily available.

In order to support the quantity of HCFC–141b requested, petitioners should submit information on historical purchasing. EPA is not establishing a strict method of determining historical use. EPA will accept documentation demonstrating the petitioner's HCFC–141b use covering 3 years or more. For example, petitioners may submit existing copies of purchasing receipts or company records to support their petition request. This information will allow EPA to determine whether the total amount of HCFC–141b requested after 2003 is reasonable. If the amount requested differs significantly from the amount historically purchased, petitioners should provide a detailed explanation for the discrepancy.

A description of the markets and applications being served by use of HCFC–141b should include a description of where the chemical is used (*i.e.*, foam blowing agent, solvent) and why it provides benefits in the specific application. Petitioners will also have to provide technical descriptions of processes in which HCFC–141b is being used. For example, if a petitioner is requesting HCFC–141b for a polyurethane foam system, the petitioner must identify whether it is a spray or pour foam process and the application (*e.g.,* roofing, tank and pipe insulation). If a petitioner is requesting HCFC–141b for multiple processes and applications, the petitioner must identify the amount of HCFC–141b that is being requested for each process and application. EPA believes this information is necessary to assess the technical needs and demands of specific processes and applications. For example, EPA may approve a petitioner's request for HCFC–141b to be used in spray roofing applications, but deny the same petitioner's request for HCFC–141b in a non-insulating pour foam application.

In order for EPA to assess the merits of each petition, petitioners will need a technical description of why alternatives and substitutes are not sufficient to eliminate the use of HCFC–141b. Petitioners should indicate what technical constraints have prevented them from obtaining or implementing their preferred alternative. For example, if building or fire codes have not yet been met with existing products petitioners should provide evidence of tests demonstrating that these standards can not be met using alternatives. Petitioners must also explain why stockpiled, recovered or recycled quantities are not feasible (*e.g.*, technical or economic constraints) or are unavailable. Petitioners should provide evidence supporting this explanation. For example, technical constraints could include unavailability of HCFC–141b stockpiles that meet quality specifications because of contamination. Economic constraints could include unavailability of HCFC–141b stockpiles at prices that would not put an undue financial hardship on the petitioner. Evidence that stockpiled HCFC–141b is simply unavailable could consist of letters from suppliers indicating that stockpiled HCFC–141b is unavailable or phone logs of inquiries made on the availability of stockpiled HCFC–141b (including the person contacted and the date of the conversation).

In order for EPA to project potential future needs and assess the progress of each company in implementing alternatives, petitioners must estimate the number of control periods over which they will continue to need HCFC–141b. The estimate must be based on a detailed description of past investigations into possible alternatives and substitutes and a timeline of future efforts and activities to research and test alternatives. The detailed description of the efforts made by each petitioner to acquire, test, and implement alternatives is a critical item required in each petition. Petitioners must submit a list of alternatives considered, purchased or sampled along with the dates purchased and copies of receipts verifying that information. The petitioner must also submit a summary of their in-house development program, including summaries of all relevant test results and their significance to the petitioner's subsequent decision-making and selection of a preferred alternative(s). Full supporting test data and relevant certificates must be made available on request. This includes in-house tests (*e.g.* preliminary burn tests for foam applications) and final product tests conducted by accredited organizations such as Underwriter's Laboratory or Factory Mutual in order to determine whether products meet applicable codes. If a petitioner has made good faith efforts to test and implement their preferred alternatives and they can demonstrate that they are not yet in a position to transition away from HCFC–141b for legitimate reasons (*e.g.*, no access to stockpiles), EPA will likely approve their request for additional HCFC–141b. If a petitioner cannot demonstrate that past efforts have been made to pursue and implement alternatives, EPA will likely deny the petition.

10. Deadline for Submitting Petitions

A person seeking an exemption for the production and import of HCFC–141b under § 82.15 would need to submit a petition for the exemption under § 82.18. Although EPA proposed that petitions would be due on July 1, 2002, this date is no longer appropriate due to the timing of publication of this final rule. Although several space vehicle/defense commenters suggested that EPA allow petitioners to submit petitions up to six months after the date of final publication of this rule, that would no longer provide sufficient time for EPA to receive and review petitions and grant exemptions in light of the January 1, 2003, phaseout date for HCFC–141b. Therefore, EPA has decided to accept petitions for the 2003 control period for up to 90 days after the date of publication of this rule although petitions received within the first 30 days will be given primary consideration for an exemption. EPA believes it is important to establish a fixed date for submission of petitions in order to process petitions in a timely manner while giving the petitions due consideration and ensuring that EPA meets requirements established under the Montreal Protocol. Those who submit after 30 days, but before 90 days, are more at risk of denial on the grounds that additional allocations would jeopardize compliance with the limits established under the Montreal Protocol. Because most of the information needed to support a

petition should be readily available, EPA believes 30 days allows sufficient time for petitioners to provide the information requested and collect and compile supporting documentation. In subsequent years, the Agency will accept petition renewals on or before October 31st of the control period for an exemption for the next control period. This is explained in more detail below. Although EPA may request additional information from petitioners after these deadlines, the Agency will not consider petitions filed after these dates or entertain requests for more HCFC–141b than was requested in original petitions and/or subsequent renewals.

11. Length of Review Process

EPA proposed a 90-day review period for the space vehicle/defense petitions. In this final rule, EPA is adopting a maximum 21 business day review period for all HCFC–141b exemption petitions in order to expedite the review process and award the HCFC–141b exemption allowances to the petitioners in a reasonable amount of time. Within 21 business days, EPA will review each petition and determine the amount of HCFC–141b that will be granted to each petitioner for the specified control period. If more information is needed, EPA will contact the applicant and specify the necessary information. EPA will consider the merits of each individual petition and industry-wide data on the availability and viability of alternatives. EPA retains the right to disallow HCFC–141b exemption allowances based on information received regarding, *inter alia,* fraud, misrepresentation, inconsistency with Articles and Decisions under the Montreal Protocol, inconsistency with the CAA Amendments of 1990, or other reasons related to human health and the environment.

12. Notification of Petitioners

To allocate HCFC–141b exemption allowances, EPA will send an e-mail or letter to the petitioner identifying the total amount of newly produced or imported HCFC–141b that may be acquired within the control period by allocating HCFC–141b exemption allowances in this amount. This same letter will be placed in EPA's Air Docket A–98–33 with the total amount of the allowance redacted in order to protect the business interests of the petitioner. If EPA decides not to grant the request for any of the reasons stated in § 82.18, EPA will issue an objection letter disallowing the request which will include the reasons for the decision. Within ten working days after receipt of the objection letter, the requestor may file a one-time appeal, with supporting reasons. EPA may affirm the objection or grant allowances, as she/he finds appropriate in light of the available evidence. If no appeal is taken by the tenth day after receipt of the objection letter, the disallowance will be final on that day.

13. How HCFC–141b Exemption Allowances Will Be Expended

Once HCFC–141b exemption allowances have been granted, the petitioner must find a supplier of HCFC–141b. Holding HCFC–141b exemption allowances for production or import does not imply or mandate production or import; each user must locate a willing supplier and negotiate supply. The petitioner must locate a supplier and send a letter to the producer/importer indicating: (1) Total quantity of allowances held; (2) quantity of allowances expended to date; (3) quantity of allowances requested; and (4) a written verification that the HCFC–141b to be manufactured is for the express purpose of meeting the HCFC–141b exemption needs. In addition, the petitioner must attach a copy of the EPA letter indicating total HCFC–141b exemption allowances allocated to them. If the quantity requested does not exceed remaining allowances (total quantity of allowances held minus quantity of allowances expended to date), the producer/importer may fill the request.

14. Transfer of HCFC–141b Exemption Allowances or Carryover into Subsequent Control Periods

HCFC–141b exemption allowances are not transferable between petitioners or in a chemical-to-chemical trade with other HCFCs. Unexpended HCFC–141b exemption allowances cannot be carried over into subsequent control periods. Unexpended HCFC–141b allowances expire at the end of the control period for which they were allocated. If there are needs beyond the control period for which the HCFC–141b was allocated, petitioners may renew their request for HCFC–141b exemption allowances for the next control period as described below.

15. Transfer of HCFC–141b Exemption Allowances in an Acquisition

EPA does not want to attach value to the allowances and provide an economic incentive for companies to petition the Agency for HCFC–141b exemption allowances. Allowances are issued on the basis of need. Therefore, if a company (the acquirer) acquires another company (the acquiree) that holds HCFC–141b exemption allowances, the acquirer must submit a renewal petition to EPA. The HCFC–141b exemption allowances held by the acquiree disappear with the purchase of the acquiree. The petition must justify why the acquirer does not possess the technical capability or does not have access to adequate stockpiles to meet the needs of the newly acquired customers and in turn requires the HCFC–141b exemption allowances. Lack of technical capability means the company has not already developed and tested alternative formulations for the same markets to meet same or similar technical requirements. The acquirer should submit the petition at the time of the acquisition of the other company holding the HCFC–141b exemption allowances, provide the necessary documentation confirming the acquisition, and follow the requirements listed for a renewal petition pursuant to § 82.18. EPA will review the petition within 21 business days and inform the acquirer of the decision in a letter.

16. Reporting and Recordkeeping Requirements

To facilitate accurate tracking of exempted HCFC–141b production and use, EPA proposed three levels of reporting. First, EPA proposed that the petitioner would report quarterly to EPA on: The type of product made with or containing HCFC–141b; the specific application of the product; the quantity of HCFC–141b used or contained in the product; and the identity of the manufacturer of the product. Second, EPA proposed that the formulator of the foam or cleaning product submit information quarterly to EPA delineating the quantity of HCFC–141b received; the quantity of HCFC–141b used or contained in the product; the identity of the producer or importer supplying the HCFC–141b; the identity of the recipient of the product made with or containing HCFC–141b; and the quantity of HCFC–141b used or contained in the product sent to the recipient. Finally, EPA proposed that the HCFC–141b manufacturer or importer would report to EPA, on a quarterly basis, the total amount of HCFC–141b produced to provide for exemptions. EPA believed that it was appropriate to require reporting from the point of origin to the final end use of HCFC–141b in order to ensure that newly produced/imported HCFC–141b was used for specific exempted purposes to meet the needs identified by petitioners and that quarterly reporting at all three levels would facilitate EPA's tracking of consumption figures and compliance with the HCFC cap.

Several commenters believed that the proposed reporting requirements as outlined above would be overly burdensome. These commenters suggested that EPA should establish annual reporting requirements and allow 45 days to prepare information consistent with the class I reporting system. One commenter suggested EPA should grant broad exemptions without imposing any reporting or ongoing petitioning obligations. The Agency maintains that reporting is necessary in order for the Agency to track HCFC–141b production and use. EPA modified the proposed requirements to reduce the number of entities reporting, the amount of information reported, and the frequency of reporting for petitioners. EPA is also increasing the number of days provided to prepare reports.

In today's final action, EPA is only requiring petitioners and chemical manufacturers/importers to report HCFC–141b acquisition and production/import. Petitioners are required to provide semi-annual reports of total quantities of HCFC–141b received to date within the same control period and the name of the supplier of HCFC–141b. Reports are due 30 days after the second quarter (July 31st) and 30 days after the fourth quarter (January 31st of the subsequent year). Commenters suggested that reporting be conducted on an annual basis consistent with class I reporting. EPA notes that this is an inaccurate description of class I reporting requirements. In the class I system, reports must be filed quarterly. Consistent with the class I reporting system, EPA is finalizing the proposed quarterly reporting scheme for chemical manufacturers/importers. Chemical manufacturers/importers must report the amount of HCFC–141b produced or imported for exemptions and submit copies of HCFC–141b requests with their quarterly class II reports within 30 days of the end of each quarter.

Petitioners must maintain records for three years. Records include: petitions with supporting documentation; EPA letter allocating HCFC–141b exemption allowances; requests for production/importation of HCFC–141b; written verification that the HCFC–141b purchased is for the express purpose of meeting the HCFC–141b exemption needs; HCFC–141b purchasing receipts; and sales receipts for HCFC–141b products sold.

17. Renewal of Requests for HCFC–141b Exemption Allowances Beyond the First Control Period

Although EPA proposed that HCFC–141b exemptions for space vehicle/defense be updated every three years via submission of an updated report, the Agency has decided to allocate HCFC–141b exemption allowances for one-year intervals. If a petitioner seeks additional HCFC–141b and believes they still meet the criteria established under § 82.18 of this final rule, EPA will evaluate renewal petitions on an annual basis. To apply for renewal of HCFC–141b exemption allowances, petitioners must submit a petition by October 31st of the year preceding the year for which the HCFC–141b is requested. The petition need only include updated information. Petitioners will not be required to submit information previously submitted to the Agency. The update should indicate the following: whether the entity has found no viable substitute and will need to extend their exemption for the next control period; why the entity believes no alternatives are viable for their application; and a detailed description of continuing investigations into and progress on possible alternatives and substitutes. Although the EPA believed the 3-year period was appropriate for space vehicle/defense needs, today's expanded petition process allows for users who may not meet the criteria established under § 82.18 for more than one year. Therefore, EPA will consider petitions and renewals on an annual basis in order to determine continued need for HCFC–141b. Although this process is more burdensome, the Agency believes annual reviews will more accurately reflect current technical needs of all petitioners including space vehicle/defense petitioners. EPA will continue to evaluate this periodic review cycle and the associated burden to assess whether it might be changed.

EPA will conduct no more than a 21-day review of the renewal request. If the petitioner meets the criteria established under § 82.18 and providing the HCFC–141b exemption allowances do not jeopardize U.S. compliance with Montreal Protocol and CAA requirements, EPA will allocate HCFC–141b exemption allowances for the next control period. Furthermore, a petitioner who does not apply for the HCFC–141b exemption in 2003 can submit a petition by October 31st for an exemption in 2004. In that case, the petition would be a full petition following the information requirements spelled out in § 82.18.

18. Penalties for Exceeding HCFC–141b Exemption Allowances

Any petitioner and/or chemical manufacturer/importer who knowingly orders production or import, or produces or imports, in excess of the quantity of unexpended HCFC–141b exemption allowances held by the petitioner may be fined up to $27,500 per kilogram of HCFC–141b produced/imported above total quantity of HCFC–141b exemption allowances held. EPA may inspect facilities to verify that information provided in a petition is accurate and to review records to ensure compliance. The fine for not complying with recordkeeping requirements is up to $27,500 per day, per violation.

19. Criteria for Approval/Disapproval

EPA may grant HCFC–141b exemption allowances if the Agency determines the allowances are necessary to maintain either safety, operational or technical viability.

EPA may decide not to grant HCFC–141b exemption allowances if the Agency determines:

(A) The needs can be met by the use of a substance other than HCFC–141b;

(B) It is technically and economically feasible to use existing supplies of HCFC–141b;

(C) There is evidence of fraud or misrepresentation;

(D) Approval of the allowances would be inconsistent with the Montreal Protocol or Decisions of the Parties;

(E) Approval of the allowances would be inconsistent with the Clean Air Act Amendments of 1990;

(F) There is an inadequate demonstration of efforts undertaken to research and implement alternatives; or

(G) Approval of the allowances may reasonably be expected to endanger human health or the environment.

20. Other Limitations to Approval of Petitions

In addition to constraints due to overall HCFC consumption limits, petitioners should be aware of other requirements that will limit EPA's ability to continue granting exemptions beyond 2010. Section 605 of the CAA contains certain constraints on use, production, and consumption of HCFCs beginning in 2015. In addition, CAA section 605(b)(2) prohibits production of class II controlled substances on or after January 1, 2030. These constraints are discussed in more detail in the proposal (66 FR 38082).

F. How Were the Baselines Established?

Section 601(2) of the CAA states that EPA may select ''a representative calendar year'' to serve as the baseline for allowance allocations for HCFCs. EPA believes that because it is allocating to entities that have very different production and import histories, no one year was representative for all companies. EPA believes that selecting only one year would

disadvantage many. EPA believes that by not selecting a year after 1997 it will avoid creating an uneven playing field that skews allocations to those companies with ample resources and good access to information. As a result, EPA proposed allocating allowances to every company based on their individual highest ODP-weighted consumption among the years 1989, and 1994 through 1997. More information on why EPA selected these particular years is contained in the proposal (66 FR 38071). EPA believes that selecting the year of highest activity for individual companies over a range of years creates less of a disadvantage to the industry and the HCFC market as a whole than selecting a single year.

Many of the sixteen commenters were either concerned about adequate future supplies for their industries or maximum market share for HCFCs with later phaseout dates. Two commenters generally supported the years selected by EPA but felt these years might not adequately serve future demand. The remainder objected to the inclusion of 1989, believed that only 1997 would be the most representative of the market, or felt that none of those years were representative and only the ''most recent'' year would serve. Two commenters agreed with EPA that selecting any year from 1998 on would create a windfall for those who increased their activity after a series of stakeholder meeting discussing the impending allowance allocation system. Three commenters requested that EPA ensure the accuracy of the allocation figures before finalizing the proposed rule. Two producers proposed allowing companies to select another year besides their highest consumption year. They stated that it would allow the company a better mix of HCFCs for their market and perhaps benefit the environment or the rest of the market if the difference in allowances were reallocated.

EPA agrees with commenters that the future evolution of the HCFC market requires an allocation different than proposed and for that reason is only apportioning allowances at this time for the most ozone-depleting HCFCs (HCFC–141b, HCFC–22 and HCFC–142b). In addition, EPA is committed to monitoring future HCFC market demand and may consider future changes to allowance allocations through future notice and comment rulemaking.

EPA tried to ensure the accuracy of the consumption figures, especially those for small businesses, by verifying database records against the paper records submitted by the pertinent company. In many cases this involved painstakingly correlating revisions to reporting forms sent in a year later than the original report.

EPA understands the concern of those who believed that a fixed allocation will not fully address future market demands. EPA believes that incorporating a high degree of flexibility in the transfers of allowances, especially its decision not to group HCFCs and restrict transfers to those within the same group, will assist in responding to market decisions and trends. The ability to import used HCFCs and to use stockpiled material after the phaseout dates are other factors that will likely avoid significant disruption of use. Finally, today's action apportions each company a quantity of allowances that exceeds its historical activity because of the pro-rating up to the U.S. cap, thereby further addressing concerns about a shortage in supply. As discussed above, EPA intends to continue to monitor the market trends as more users transition to less ozone-depleting HCFCs and more non-ozone-depleting alternatives become available.

With today's action, EPA is assigning individual consumption baseline years to each company by selecting its highest ODP-weighted consumption year from among the years 1994, 1995, 1996, and 1997. EPA is also assigning individual production baseline years to each company by selecting its highest ODP-weighted production year from among the years 1994, 1995, 1996, and 1997. EPA's decision to remove 1989 from the range of years for the selection of consumption and production baselines was based on reassessments after numerous commenters indicated the marked difference between the HCFC market in 1989 versus the more recent evolving HCFC market. The mix of HCFCs being produced in 1989 would markedly constrain the market and its participants compared to the more recent mix of HCFCs needed to support current uses. Allowance holders to which EPA proposed to grant allowances for their 1989 activity as their best consumption year will receive their best consumption year from among 1994, 1995, 1996, and 1997. By not establishing baselines in this action for the HCFCs with relatively low ozone depleting potential, EPA is preserving more flexibility for companies whose mix of HCFCs is currently in flux. In addition, companies that wish to obtain allowances for different HCFCs may take advantage of the transfer provisions. EPA proposed an exception to its policy to not use 1998 or later years as part of a company's baseline in an effort to assist small businesses in the HCFC market who might not have been familiar with EPA's plans to develop an allowance system for HCFCs. EPA proposed granting available HCFC consumption allowances to late entrants into the import market that met certain conditions: (1) The HCFC market is their primary source of business income; (2) they began importing HCFCs after the end of 1997 but before the publication of the ANPRM on April 5, 1999, and (3) they accurately reported all relevant required quarterly import information to EPA prior to the publication date of the NPRM, July 20, 2001.

EPA received eight comments on granting available HCFC allowances to late entrants. Two producers and one importer opposed the proposal. They believed that companies that failed to take the trouble to know and comply with the rules to report HCFCs should not be rewarded with allowances and that the proposal was an attempt to artificially create a basis for allocation. The third criterion listed above is intended to ensure that companies are not rewarded for a failure to file required reports. In addition, EPA believes that compliance with reporting requirements does not automatically deliver information about additional regulations under consideration. EPA also believes that small businesses may have been disadvantaged regarding the changeable nature of regulations and the need for monitoring the **Federal Register** for notices of proposed regulations.

One commenter stated that opening up 1998 as a baseline year for new entrants justified including that year for all companies receiving baseline allowances. EPA does not equate late entrants with companies that were notified about and/or attended the stakeholder meetings. The companies that were notified of or attended stakeholder meetings in early 1998 were given information about how EPA would establish HCFC baselines. Immediately following these meetings, several companies significantly increased their production/imports. Because late entrants were not actively participating in the HCFC market in the early and mid-1990s they were therefore presumably unaware of the baseline-setting procedures being considered by EPA. As a result of their late entrance into the HCFC market there are fewer years from which EPA can make a baseline determination than for companies with an established history in the HCFC market.

The remaining five commenters, made up of users of HCFCs and trade associations, were mainly concerned that after late entrants received their allocations, any allowances left be reallocated to the rest of the field to

avoid a shortfall in the supply of HCFCs. With today's action, EPA is in fact pro-rating historical levels and allocating additional allowances up to the U.S. cap after the late entrants receive their allocations to address concerns about a shortfall in supply.

One commenter requested a definition of ''primary source'' regarding the source of income from HCFCs for late entrants. EPA believes that if a company is obtaining 80 percent or more of its business income from the HCFC market, then the HCFC market is that business' ''primary source'' of income. EPA is granting available allowances to late entrants subject to the conditions discussed above. One late entrant submitted the required documentation demonstrating that: (1) They began importation of HCFCs in March 1999 after formation in February 1999; (2) they accurately reported all relevant required quarterly import information to EPA prior to the publication date of the NPRM, July 20, 2001; and (3) their refrigerant imports represented 96 percent of their gross refrigerant volume. In addition to meeting the criteria stated above, this company also demonstrated that they are a woman-owned, small and disadvantaged business enterprise; and although aware of regulatory requirements regarding the importing of refrigerant, they were unaware of the impending ANPRM, April 5, 1999. The allowances allocated to this late entrant are included in the list of consumption allowance holders in this document.

The list of consumption allowance-holders in this document includes an importer that did not appear in the NPRM. This importer was in the market during the years 1994, 1995, 1996, and 1997 but EPA requested additional information in order to verify the import records prior to publication of the NPRM. EPA did not receive this company's documentation in time to verify the data and assign them a baseline in the NPRM. Subsequent to publication of the NPRM the requisite information was submitted and verified by EPA. Based on this information, EPA is establishing baseline allowances for this company with today's action.

G. Will I Be Able to Transfer Allowances?

EPA proposed processing all transfers of allowances within three working days from when EPA receives an e-mail or fax or a written request for an inter-pollutant or inter-company transfer. EPA will send a reply showing the new balance of unexpended allowances. EPA's decision to propose such a fast processing time was intended to ensure that transfers are easy and EPA's role is not disruptive to market transactions. EPA believes that it will have sufficient time to ensure that the company making the transfer has the requisite number of unexpended allowances. Two commenters supported this proposed procedure. One commenter felt this was a reasonable turnaround time, as long as EPA can tolerate the work load and that the three days should not put undue burden on requesting companies. EPA will process all transfers in the time period discussed above.

Of the nine addressing transfers, seven commenters advocated maximum flexibility in transferring allowances. This flexibility was considered imperative if tracking were done on the proposed chemical-by-chemical basis instead of the ODP-weighted option. The commenters also said that an offset ratio no higher than the proposed 0.1 percent would also contribute to flexibility in the system. Three commenters favored allowing transfers of Article 5 allowances to increase the flexibility of the transfer system. One of the three commenters felt this is an appropriate policy that will encourage Article 5 countries to transition within their economic means to less ozone-depleting chemicals without undue social burden and still achieve the goal of reducing ozone-depleting chemicals worldwide. EPA agrees with the commenters and is establishing procedures for transfers with maximum flexibility within the constraints of the allowance system.

1. Transfers Within Groups of HCFCs

EPA is permitted to establish groups of HCFCs under Section 607(b)(3) of the Act. Within such a framework, inter-pollutant transfers of allowances would be limited to chemicals within an assigned group. The Act does not require any such grouping for HCFCs and EPA did not propose to group. EPA believed that limiting transfers by grouping HCFCs would decrease the flexibility many commenters requested. Therefore, HCFCs will not be grouped and allowance holders will be able to transfer among all HCFCs as long as the resulting HCFC has not been phased out.

2. Inter-Pollutant Transfers

Section 607(b) of the Act permits inter-pollutant transfers of ODSs. An inter-pollutant transfer is the transfer of an allowance of one substance to an allowance of another substance on an ODP-weighted basis. In addition, Section 607 requires that any transfer result in a benefit to the environment. The offset contained in today's action is intended to fulfill this mandate.

Inter-pollutant transfers are sometimes called intra-company transfers because a company might shift allowances internally from one ODS to another to react to shifts in demand. For example, a company might wish to transfer 10,000 kilograms of HCFC–142b allowances for HCFC–22 allowances, which would result in 11,818 kilograms of HCFC–22 because of the adjustment for the ODPs of the two chemicals. The calculation would proceed like this: the 10,000 kilograms of HCFC–142b allowances are multiplied by the ODP of HCFC–142b (0.065) and then divided by the ODP of HCFC–22 (0.055), yielding 11,818 kilograms of HCFC–22 allowances. The 0.1 percent offset is then subtracted from 11,818 kilograms.

EPA proposed allowing inter-pollutant transfers (or intra-company transfers) in conjunction with the chemical-by-chemical tracking system. One commenter felt this reasonable proposal will easily enable companies to take advantage of the capability for transfers without undue burden. Only one commenter preferred no inter-pollutant transfers because of the belief that allowing such transfers would reduce the sense of urgency in researching alternatives to HCFCs. Inter-pollutant transfers allow companies to respond to market forces and achieve economies of scale in production and import, but as the phaseouts and reductions in consumption proceed, the opportunities for inter-pollutant transfers will decrease over time. This tightening of the ability to transfer allowances parallels the tightening of the overall quantity of allowances, leading to greater incentives for research into and development of alternatives. In addition, companies that wish to continue to supply their customers will have incentives to research and develop alternatives over the long term while conducting inter-pollutant transfers during the short term.

Because the consumption and production allowances for a specific HCFC disappear after its phaseout date, inter-pollutant transfers of those allowances will no longer be possible after the phaseout date. For example, after HCFC–141b is phased out on January 1, 2003, a company cannot transfer ODP-weighted HCFC–141b production or consumption allowances for HCFC–22 allowances. No production or consumption allowances for HCFC–141b will exist after December 31, 2002.

EPA will process inter-pollutant transfers within three working days from when EPA receives a fax or a request for the transfer. EPA will send

a reply showing the new balance of unexpended allowances, taking into account the 0.1 percent offset.

3. Inter-Company Transfers

Section 607(c) of the Act permits inter-company transfers of allowances. Inter-company transfers are transfers of allowances, for the same ODS under a chemical-by-chemical system, from one company to another company. For example, Company A would transfer its allowances to Company B who wished to have more allowances. Both companies would need to record and report the chemical(s) associated with that transfer. The requisite offset would be deducted by EPA from the transferor's allowance balance when processing the transfer.

EPA proposed to allow inter-company transfers, with an environmental offset and to process all transfer requests within three working days from when EPA receives the request.

Because the consumption and production allowances for a specific HCFC disappear after its phaseout date, EPA proposed that inter-company transfers of those allowances will no longer be possible after its phaseout date. For example, after HCFC–141b is phased out on January 1, 2003, a company cannot transfer its HCFC–141b production or consumption allowances to another company. No production or consumption allowances for HCFC–141b will exist after December 31, 2002.

EPA also proposed allowing inter-company transfers of Article 5 allowances to allow for shifts in production that would permit market efficiencies.

One commenter expressed support for inter-company transfers and the remaining commenters were silent on this issue. EPA will allow inter-company transfers of production allowances and consumption allowances until the phaseout date of each HCFC and will allow inter-company transfers of Article 5 allowances. After the phaseout date for a specific HCFC, EPA will allow inter-company transfers of export production allowances. EPA will process inter-company transfers within three working days from when EPA receives a fax or a request for the transfer. EPA will send replies showing the new balances of unexpended allowances for each company. The transferor's new balance will reflect the 0.1 percent offset.

4. Inter-pollutant Transfers Combined With Inter-Company Transfers

Section 607(c) of the CAA authorizes inter-company combined with inter-pollutant transfers, subject to certain requirements. EPA proposed allowing inter-pollutant transfers combined with inter-company transfers for HCFCs, with a 0.1 percent offset. These transfers will be treated as a single transaction and therefore require only a 0.1 percent offset. Three of the ten commenters on transfers specifically favored inter-pollutant transfers combined with inter-company transfers. One commenter felt this capability is flexible and will enable companies to meet their production/import needs. Seven commenters generally supported maximum flexibility in transfers. EPA will allow inter-pollutant transfers combined with inter-company transfers of production allowances and consumption allowances up to the phaseout date of each HCFC. A 0.1 percent offset will be required to provide the environmental benefit called for in the CAA.

The chemical-by-chemical phaseout will affect the availability of these transfers and the types of allowances over time. For example, after the 2003 phaseout of HCFC–141b and before 2010, a company receiving export production allowances and Article 5 allowances for HCFC–141b could engage in inter-company transfers of those allowances, but not in inter-pollutant transfers. In 2010, when export production allowances and Article 5 allowances for HCFC–22 and HCFC–142b become available, these allowances will be transferable with the ones for HCFC–141b.

5. International Trades of Current-Year Allowances

For purposes of industrial rationalization, international trades of production and consumption allowances are permitted in some circumstances but require more review than inter-pollutant and inter-company transfers. The Protocol defines industrial rationalization in Article 1 as ''the transfer of all or a portion of the calculated level of production of one Party to another, for the purpose of achieving economic efficiencies or responding to anticipated shortfalls in supply as a result of plant closures.''

(a) Consumption Allowances

In Article 2, the Protocol restricts the international trade of HCFC consumption by linking it with CFC consumption. A more detailed discussion may be found in II.I.5 of the NPRM (66 FR 38076). Under the Protocol, the U.S. cannot trade HCFC consumption to another Party because the U.S. per capita CFC consumption in 1989 was 1.28 kilograms, well above the 0.25 kilogram per capita limit required of a Party trading consumption to another Party.

However, the Protocol allows the U.S. to potentially receive a trade of HCFC consumption from another Party. Only two Article 2 countries, Norway and Poland, had a per capita CFC consumption in 1989 below 0.25 kilograms. These are the only Parties from which the U.S. could potentially receive a trade of HCFC consumption.

Only two of the ten commenters on transfers singled out international consumption trades for special mention. One commenter felt that such trades would be difficult to engage in and would therefore likely not be a part of their import business. A commenter who was interested in the trade of consumption rights from Norway and Poland requested that the provisions be included in the final rule. Today's action creates provisions and requirements for EPA's processing of a request to trade consumption from one of the two eligible countries to the U.S. To trade consumption from a Party, EPA must receive a letter from that country's diplomatic embassy stating that their consumption level is being reduced by the amount being traded, in accordance with 82.18(d).

(b) Production Allowances

During the eleventh Meeting of the Parties in 1999, the adoption of a production cap provided the potential for trades of production between Parties. Because of the minimal restrictions placed on the trade of HCFC production compared to trade of HCFC consumption, EPA proposed provisions for the international trade of production allowances and the subsequent calculations necessary to revise the production limits for all traders trading production in the same control period.

Only three commenters out of ten commenting on transfers discussed international trades of production and two were in favor while one was not. EPA did not receive any comments suggesting alternative methods of calculating the revised production limits. If EPA approves the proposed trade, the Administrator is required to establish revised production limits for the trader so that the aggregate domestic production permitted after the trade reflects the effect of the trade of production allowances. Such trades cannot result in an increase in production over what would have occurred in the absence of the trade. EPA will notify each trader of the revised production limit after approving the trade of production allowances to a Party rather than waiting to the end of the control period; traders will then be able to make timely market decisions

with the remaining production allowances. EPA received one comment on the proposed method of determining the trader's balance of production allowances, pointing out that the provided formula could result in a negative number. EPA tested the formula and is adjusting it accordingly to prevent any negative result. In today's rule EPA is finalizing the method of calculating the trader's balance as follows: the Administrator would issue a notice revising the trader's balance of production allowances to equal the lesser of: (a) The unexpended production allowances held by the trader minus the quantity of production allowances traded; or (b) the unexpended production allowances held by the trader minus the amount by which the U.S. average annual production of the HCFC being traded for the three years prior to the trade is less than the total allowable production of the controlled substance under this subpart minus the amount traded. For those more comfortable with formulas, the method can be expressed in this manner:

$f = (a - d)$, if $c \leq b$

or

$f = a - [(c - b) - d]$, if $c > b$

where a=the person's unexpended production allowances, b=the U.S. 3-year average production for that HCFC, c=the total allowable U.S. production for that HCFC, and d=the actual quantity being traded, and f=the person's revised production allowance level. This formula is based on the language of Section 616 of the CAA.

The single dissenting commenter encouraged prohibiting trades of production because of the economic hardship that such trades can produce for American workers, users of HCFCs and suppliers to plants that produce HCFCs. This commenter felt that trades of production away from the U.S. can reduce the total amount of allowable production, thereby distorting markets and the availability of a substance. The legal framework in which EPA proposed the system for international trades of HCFC production is governed by the Protocol and the CAA. The Parties to the Protocol met in 1999 and decided to allow for trades of production rights between Parties because they recognized the need for industrial rationalization. The Parties acknowledged that companies would likely want to consolidate HCFC production in different countries so that a company could achieve economies of scale. In addition, Section 616 of the CAA indicates that Congress contemplated trades of production rights between the U.S. and other Parties to the Protocol. There have been international trades of class I production allowances since the establishment of the allowance system for class I ozone-depleting substances. EPA received many comments on the NPRM supporting flexible trade mechanisms because they reduce regulatory interference in the global HCFC market. In following the model established for class I ozone-depleting substance, the Agency will consider (1) possible creation of economic hardship; (2) possible effects on trade; (3) potential environmental implications, and (4) the total amount of unexpended production allowances held by United States entities, by asking for concurrence on international trades from the Department of Commerce, the United States Trade Representative, and the Department of State.

The commenter also considered approvals of international trades a significant administrative action and believed that publishing the proposed trade in the **Federal Register** would allow users and other affected persons an opportunity to comment on the economic impact of the proposed international trade. EPA did not adopt such procedures for international trades under the class I system and believes that they would cause excessive delays in acting on requests for international trades which is contrary to the desire of almost all commenters for a flexible, un-burdensome system.

Beginning January 1, 2004, EPA will only allow international trades of production allowances to and from Parties that are either: (1) Listed in Appendix L and have ratified the Beijing Amendments as listed in Appendix C, or (2) not listed in Appendix L but are listed in Appendix C as having ratified the Copenhagen Amendments. EPA will revise the production limits for all traders trading production allowances in the same control period following the calculations discussed above.

6. Transfers of Current-Year Allowances

A transfer of current-year allowances means the allowances being traded can only be expended for production or import in that specific control year. Transfers of current-year allowances do not permanently change the quantity of baseline allowances assigned to a company. A transfer of current-year allowances is a temporary transfer and is reflected in a company's balance of allowances for the control period in which the transfer occurred. EPA proposed allowing transfers of current-year allowances and of the ten commenters on transfers, two explicitly favored current-year transfers of allowances. One of the two favorable commenters stated that the transfer should be subject to the minimum possible offset. The rest of the commenters generally supported all kinds of transfers that might confer the maximum degree of flexibility in the transfer system.

EPA will allow trades of current year allowances so companies will have flexibility to respond to market forces and achieve economies of scale in production and import.

7. Permanent Transfers of Baseline Allowances

The permanent transfer of baseline allowances is a lasting shift of some quantity of a company's allowances to another company. The permanent nature of the transfer makes it different from the transfer of current-year allowances. In all relevant subsequent years, the transferor's quantity of baseline allowances would be permanently reduced, while the transferee's quantity of baseline allowances would be permanently increased. For example, if a person transfers baseline allowances of HCFC–22, their baseline would be decreased permanently by the transfer amount, and the recipient would gain HCFC–22 baseline allowances, minus the offset, on a permanent basis. Subsequent inter-pollutant transfers of these baseline allowances would also be permitted. However, at the time of a reduction step or a phaseout of the substance, the current holder of baseline allowances that were received in a permanent transfer would be the person who would have them deducted.

EPA proposed allowing such permanent transfers of allowances for HCFCs. Only two of the ten commenters on transfers singled out permanent transfers for favorable comment. One commenter felt that they should be subject to the minimum possible offset. The other commenter believed that as the industry evolves and the companies with it, allowing permanent transfers may enable better production techniques and/or streamlining of facilities. The rest of the commenters generally supported all kinds of transfers that might confer the maximum degree of flexibility in the transfer system. EPA will allow permanent transfers of baseline allowances with those allowances disappearing at the phaseout date for the specific HCFC, regardless of what inter-pollutant transfers had taken place.

8. Offset for a Transfer of Allowances

Section 607(c) of the CAA requires that transfers result in a greater environmental benefit than would occur in the absence of such a transfer. This can be achieved by an offset for inter-pollutant and inter-company transfers. However, inter-pollutant transfers combined with inter-company transfers would only require one offset. Since international transfers are governed by Section 616 of the CAA and that section does not contain similar requirements for an environmental benefit, no offset was proposed for such transfers.

EPA proposed a 0.1 percent offset be applied to inter-pollutant and inter-company transfers to afford an environmental benefit associated with domestic transfers. Of the ten commenters on transfers, three commenters supported the proposed 0.1 percent offset while one commenter proposed a 0.05 percent offset. EPA believes that the 0.1 percent offset reflects the lower ODP of class II controlled substances compared to class I substances; allows for simplicity in calculation; and still provides an environmental benefit associated with domestic transfers. EPA believes that a lower offset, such as the 0.05 percent proposed by a commenter would reflect the lower ODP of class II controlled substances but provide such a small environmental benefit as to be valueless. The remaining commenters did not mention the offset. One of the supporters of the 0.1 percent offset suggested no offset at all for intra-company transfers, a one-time offset for inter-company transfers, and only a one-time offset over the lifetime of a permanent transfer. This suggestion could not meet the requirement of Section 607(a) of the CAA. That section requires EPA's regulations to ensure that ''transactions under the authority of this section will result in greater total reductions in the production in each year of class I and class II controlled substances that would occur in that year in the absence of such transactions.'' Intra-company transfers are transactions ''under the authority of'' Section 607 of the Act. They are specifically provided for in Section 607(b). Thus, it is not possible to waive the offset requirement entirely for intra-company transfers. In addition, a one-time offset for other types of transfers would not ensure ''greater total reductions'' in subsequent years and thus would not meet the requirements of Sections 607(a) and (c).

EPA is requiring a 0.1 percent offset for inter-pollutant and inter-company transfers. Inter-pollutant transfers combined with inter-company transfers would be treated as a single transaction and therefore require only a 0.1 percent offset. International transfers will require no offset.

H. Will Production for Export Be Allowed After Each Phaseout?

Because the U.S. is phasing out HCFCs chemical-by-chemical rather than by percentage, it is possible to produce an HCFC for export even after it is phased out domestically. To differentiate pre-phaseout allowances from post-phaseout allowances, a new type of allowance was necessary for the phased-out HCFCs and EPA proposed creation of an ''export production allowance.'' The first HCFC scheduled for phaseout in the U.S. is HCFC–141b. EPA believes that foreign demand for HCFC–141b will continue in years beyond the U.S. 2003 phaseout.

1. Exports to Parties

Since production and consumption allowances for HCFC–141b will no longer exist as of January 1, 2003, but the potential for overseas markets for HCFC–141b will still exist, EPA proposed allowing production for export only to Parties that had ratified the Copenhagen Amendments. EPA proposed allocating ''export production allowances'' equal to 100 percent of baseline production allowances for HCFC–141b with the requirement that HCFC–141b produced in the U.S. under these allowances be exported to Parties listed in Appendix C as having ratified the Copenhagen Amendments.

Two commenters were concerned that EPA would cease allocating export production allowances for HCFC–141b as early as December 31, 2009, and requested that allowances be available until December 31, 2029. One commenter suggested that since exports from the European Union are allowed through 2025, the U.S. should follow suit and not unfairly prejudice U.S. business. In the NPRM, EPA proposed that these allowances would remain available at least until December 31, 2009, and that EPA expected to re-evaluate the availability of export production allowances for HCFC–141b, HCFC–22, and HCFC–142b. EPA had planned to issue a rule prior to 2010 which would allocate export production allowances for subsequent control periods, taking into account any relevant modifications to the Protocol or the CAA. With today's action, EPA is allocating export production allowances until 2030 for HCFC–141b, HCFC–22 and HCFC–142b. If the Protocol modifies the formula for the production cap, EPA will modify the allocation of export production allowances through notice and comment rulemaking accordingly. One commenter agreed with the proposal to provide for export production allowances as long as the exports were exported to Parties that have ratified the Beijing Amendments. EPA proposed to limit exports to Parties that have ratified the Copenhagen Amendments. The issue of limiting exports to certain Parties arises because at the eleventh meeting in 1999, the Parties agreed to an amendment to the Protocol requiring that, beginning January 1, 2004, each Party shall ban HCFC imports from and exports to countries that have not ratified the amendments that contain control measures for HCFCs. This ban reflects a strategy by the Parties to encourage ratification of the Protocol and each successive package of amendments. The majority of the control measures for HCFCs are contained in the Copenhagen Amendments. However, the control measures to cap HCFC production were included with the trade ban provisions in the Beijing Amendments. After further review, EPA has decided that the proposed interpretation of the trade ban was incorrect. However, EPA is not adopting the commenter's interpretation. EPA has concluded that the trade ban should be interpreted such that countries need only have ratified the amendments that contain controls measures relevant to that country. EPA believes the HCFC production control measures are only relevant to countries that produce HCFCs and therefore believes the trade ban should differentiate between countries that produce HCFCs, and those that do not produce HCFCs. Today's action lists countries that produce HCFCs in Appendix L, according to the UNEP Ozone Secretariat's compilation of information submitted in accordance with Article 7 of the Montreal Protocol. With today's action, starting January 1, 2004, trade in HCFCs with producing countries will be restricted to only those that have ratified the Beijing Amendments. If a country is not an HCFC producer, then trade in HCFCs will be restricted to only those that have ratified the Copenhagen Amendments. Article 4, paragraph 8 of the Protocol recognizes that countries may actually be complying with relevant control measures without having officially ratified the Protocol or its relevant Amendments and permits the Parties to meet and determine that imports from and exports to these countries is permitted. With today's action, EPA is also including the potential for a country to be determined by the Parties to be complying with the relevant

control measures, in which case they would be listed in Appendix C, Annex 2 of the Protocol, and HCFC trade with that country would be allowed. In summary, beginning January 1, 2004, the HCFC trade ban provisions limit production for export to Parties that are either: (1) Listed in Appendix L of this subpart and have ratified the Beijing Amendments as listed in Appendix C, Annex 1 of the Protocol, or (2) not listed in Appendix L of this subpart but listed in Appendix C, Annex 1 of the Protocol, as having ratified the Copenhagen Amendments, or (3) listed in Appendix C, Annex 2 of the Protocol, as being a foreign state complying with the Beijing Amendments if the foreign state is listed in Appendix L of this subpart, or as being a foreign state complying with the Copenhagen Amendments if the foreign state is not listed in Appendix L of this subpart.

Because production will be frozen at a constant level throughout the various phaseout years, unless there are further changes to the Protocol, EPA is granting export production allowances to produce the phased-out HCFCs at that level after the respective phaseouts. Export production allowances may only be used to produce for export to Parties that are either: (1) Listed in Appendix L and have ratified the Beijing Amendments as listed in Appendix C, or (2) not listed Appendix L but are listed in Appendix C as having ratified the Copenhagen Amendments. The production allowances for the phased-out HCFC before the phaseout date are equivalent to the export production allowances after the phaseout date.

2. Exports to Article 5 Countries

The Protocol allows for production of HCFCs at a level of 15 percent of production baseline explicitly for export to Article 5 countries to meet their basic domestic needs (Article 5 countries are listed in Appendix E to Subpart A of Part 82). But Section 605(d)(2)(B) of the CAA requires that between 2015 and 2030 the production for Article 5 countries be limited to 10 percent of baseline. Between 2030 and 2040, Section 605(d)(2)(B)allows production of 15 percent of baseline for Article 5 countries. In order to reconcile the percentages allowed by the Protocol and by the CAA, the schedule for Article 5 allowances will be: 15 percent of production baseline from January 1, 2003 (HCFC–141b) or January 1, 2010 (HCFC–22 and HCFC–142b) through December 31, 2014; 10 percent of production baseline from January 1, 2015 through December 31, 2029; and 15 percent of production baseline from January 1, 2030 through December 31, 2039.

EPA proposed allocating 15 percent of production baseline of the phased-out chemical for export to Article 5 countries after the U.S. phaseout date. Article 5 allowances could be expended without accompanying consumption allowances. Most commenters on Article 5 allowances were primarily interested in the ability to transfer these among themselves to respond to market demands. As explained above in Section III.G, EPA is permitting transfers of Article 5 allowances.

One commenter noted that the proposal indicated Article 5 allowances would be available only until 2030 while the Act would allow them until 2040. In verifying the authority to grant Article 5 allowances, EPA noted the Act authorizes Article 5 allowances up to 10 percent between 2015 and 2030 and up to 15 percent between 2030 and 2040 while the Protocol authorizes 15 percent throughout. Section 614 of the CAA states ''In the case of conflict between any provision this title [Title VI of the CAA] and any provision of the Montreal Protocol, the more stringent provision shall govern.'' Consistent with Section 614, EPA has written today's final rule to reflect the most stringent percentages.

I. Will There Be a Petition System for Importing Used HCFCs?

The Parties to the Protocol allow the import of used ODSs outside of the consumption cap because they believe this will reduce the burden of the transition to alternatives. The Parties to the Protocol also believe that allowing trade in already existing used material will offset the need for new global production.

Because illegal imports of virgin CFCs occurred in the absence of a petition process for importing used CFCs, EPA believes that a petition process for importing used HCFCs is needed. EPA anticipates that attempts to illegally import virgin HCFCs will occur as HCFCs are phased out and the supply of HCFCs diminishes in the face of continuing demand. EPA proposed a petition process for the import of used HCFCs similar to the process for class I substances, such as CFCs, to ensure that relevant class II imports are legitimately used previous to import. In finalizing the proposed petition process for used class II controlled substances, EPA has also taken into consideration comments on proposed changes to the petition process for used class I substances (64 FR 41627).

1. Petition for Each Individual Shipment

EPA proposed that a petition to import used HCFCs be submitted on a shipment-by-shipment basis. The information in a petition and the quantity a person wishes to import into the U.S. must be limited to a specific shipment and a single U.S. Customs entry. Since there were no comments concerning this provision, EPA will establish the shipment-by-shipment petition process as proposed.

2. Threshold Quantity Requiring a Petition

EPA proposed a threshold quantity of five (5) pounds or more of used HCFCs for an individual shipment that requires a petition to import. The five (5) pound threshold allows a company to take three samples from a large ISO-tank for laboratory analysis and send the samples to a test facility in the U.S. without being subject to the petition requirements. Since there were no comments concerning this provision, EPA will retain the proposed threshold quantity.

3. Information Requirements

EPA proposed that petitions contain the type of information needed to independently verify the previous use of the HCFC. For example, EPA proposed that the importer supply contact information for the entire chain of custody of the used HCFC in the petition. EPA also proposed requiring a copy of the contract for the purchase of the used HCFC and information on the intended use. In light of efforts by the Parties to the Protocol to implement a licensing system for exports as well as imports, EPA proposed that the petitioner obtain an export license from the appropriate government agency in the country of export. EPA requested comment on the utility and burden of supplying information about the name, make and model number of the equipment from which the HCFC was removed as a means of verifying that the material had been truly used in the operation of equipment.

In today's final rule, EPA is including a requirement that the petition contain ''a list of the name, make and model number of the equipment from which the material was recovered at each source facility.'' EPA believes that the submission of this information is vital to the Agency's ability to verify that the controlled substance was, in fact, previously used and is not simply a quantity of falsely labeled controlled substance that was newly produced. In the class I petition process, EPA uses information about the specific

equipment to verify that the quantity a petitioner wants to import could have been recovered from that equipment during the normal course of its operation. In general, the Agency has access to technical specifications for most equipment, including their typical ODS ''charge'' or amount of ODS they can hold. Over the years, the Agency has received many petitions to import tens of metric tonnes of an ODS claimed to have been recovered from specific equipment when the equipment's specifications indicated that the amount specified in the petition would not typically have been held in, or recovered from, the specific equipment (even in leaky, malfunctioning situations) over a 10-year period. Based on these kind of analyses, and contact with the source facility, EPA has been able to object to petitions. The Agency also wants to note that most petitions received to date have included this information. Finally, EPA believes that the petitioner must take some responsibility for ensuring that the ODS was previously used before submitting a petition, and to do this the petitioner should follow the chain of custody of the material back to the source facility and equipment from which it was recovered. This diligence in tracing ODS back to the source facility would allow a petitioner to include the specific information about the equipment from which it was recovered. Because U.S. obligations under the Protocol limit imports to zero after the phaseout, the Agency's ability to independently verify that a quantity of ODS was, in fact, recovered at a source facility from specific equipment is the most critical step in ensuring the U.S. compliance under the international treaty.

Several commenters on proposed changes to the petition process for used class I substances took issue with the proposed requirement that the importer submit ''* * * a copy of the contract for the purchase of the controlled substance that includes the name, address, contact person, phone number and fax number of the purchaser.'' The commenters requested that EPA clarify this information requirement, which appeared both in the proposed changes to the class I petition process and in the proposed class II petition process. EPA intended that the petitioner provide a copy of the contract for the purchase of the controlled substance by the ultimate user in the United States. The commenters argued that in many cases the petitioner does not know the ultimate purchaser of the material at the time the petition is being submitted. EPA believes that in some instances the importer of a used controlled substance will already know the purchaser, but this will not always be the case. Therefore, EPA is revising the proposed language so that the final requirement reads: ''A description of the intended use of the used control substance, and when possible, the name, address, contact person, phone number and fax number of the ultimate purchaser in the United States.''

One commenter on the proposed petition process for class II controlled substances noted that equipment is commonly ''top charged,'' meaning a little material is added to the equipment. This was in response to the requirement that the importer supply the date the material was put into equipment at each source facility and that the material must have remained in the equipment for at least 24 months prior to recovery. The commenter requested that EPA clarify whether a refrigeration system that is top charged within 24 months of the material's proposed import date may be imported as used material. In § 82.24(c)(3)(iv), EPA proposed the 24 month period for an HCFC to be considered ''used'' in order to make certain that imported HCFCs were actually employed in a working system (*e.g.*, as a refrigerant). Several commenters on the identical proposed change to the petition process for used class I substances pointed out that the phrase ''dated documents,'' as used in this proposed requirement, is ambiguous. The proposed information requirement in (iv) was, ''A detailed description of the previous use of the controlled substance at each source facility and dated documents indicating the date the material was put into the equipment at each source facility (material must have remained in the equipment at least 24 months prior to recovery to be considered previously used)''. The commenters suggested that the phrase ''dated documents'' needs clarification as to whether the Agency is seeking documents dated at the time the ODS was put into the equipment or documents dated at the time a person submits a petition certifying, to the best of their knowledge, when the ODS was put into the equipment. In addition, several commenters expressed concern that finding documents that are dated from the time the ODS was put into the equipment may be virtually impossible because enterprises only keep documents for a limited number of years and the equipment could have been filled with the ozone-depleting substance many years ago. Commenters on the proposed changes to the petition process for class I substances also pointed out a number of practical objections to the proposed requirement that the ODS must have remained in the equipment for at least 24 months. Two commenters on those proposed changes suggested that instead of requiring documents regarding the date when the controlled substance was put into equipment EPA could request such documents be submitted, when possible, but at a minimum require the petitioner to certify a ''best estimate'' of the length of time that the ODS was in the equipment. EPA believes that these are useful suggestions. In addition, EPA believes that the practical realities cited by commenters regarding a minimum residence time for the ODS in equipment makes such a requirement unworkable. Thus, instead of retaining the language from the proposal, EPA is adopting the following language in today's final action: ''A detailed description of the previous use of the controlled substance at each source facility and a best estimate of when the specific controlled substance was put into the equipment at each source facility, and, when possible documents indicating the date the material was put into the equipment.''

4. Timing for Review of a Petition

Based on its experiences with the 15 working-day time limit for processing petitions to import used CFCs, EPA proposed forty (40) working days to allow more time for the review of petitions to import used HCFCs. The period for review would begin on the working day after EPA's Global Programs Division receives the petition, with no automatic approval. The proposed 40 working-day period is an effort to balance responsiveness and thoroughness in review of the petition. While EPA will make every effort to respond to the petitioner within the 40 working-day period, a lack of response does not constitute a grant of authority to import. A commenter stated that given the large amount of data requiring verification, it may be difficult for EPA to verify the information within two months. EPA believes that 40 working days will be adequate to review each petition in all but exceptional cases, based on EPA's experience processing petitions to import used CFCs. The provisions are finalized as proposed.

5. Reasons for Issuing an Objection Notice

Since 1994, EPA has worked with the Department of Justice, the Internal Revenue Service, the Customs Service, the State Department, and the Department of Defense to confirm the information in petitions to import used

CFCs. Based on this experience, EPA proposed a list of reasons for issuing an objection notice to a petition to import used HCFCs.

EPA proposed five reasons for issuing an objection notice that are included in today's action. Reason (A) is a lack of sufficient information. Reason (B) is the submission of false or misleading information. If the transaction appears to be contrary to the provisions of the *Vienna Convention on Substances that Deplete the Ozone Layer,* the Montreal Protocol and Decisions by the Parties, or the Protocol's non-compliance procedures, EPA may issue an objection notice pursuant to reason (C).

Under reason (D), EPA may issue an objection notice if the exporting country has not granted an export license for the shipment. Finally, under reason (E), EPA may disallow a petition to import used HCFCs from an Article 5 country that has reclamation facilities subsidized by the Multilateral Fund (MLF).

In the proposed rule, reason (B) for issuing an objection notice read as follows: ''If the Administrator determines that any portion of the petition contains false or misleading information or has reason to believe that the petition contains false or misleading information.'' One of the commenters on the proposed changes to the petition process for class I substances stated that an EPA objection under reason (B) might be ''based on unsubstantiated allegations or unfounded belief.'' EPA agrees that the phrase ''has reason to believe'' may be too vague. Thus, in today's action, EPA is modifying reason (B) for issuing an objection notice to read: ''If the Administrator determines that any portion of the petition contains false or misleading information, or the Administrator has information from other U.S. or foreign government agencies indicating that the petition contains false or misleading information.''

EPA received one comment on its proposal to issue an objection notice for any petition to import used HCFCs from an Article 5 country that has reclamation facilities subsidized by the MLF. The intent of the MLF was to allow Article 5 countries to reclaim used HCFCs for their domestic needs. The commenter stated that there were technically valid reasons for allowing imports of used HCFCs from Article 5 countries that had MLF reclamation facilities. That commenter believed that most of those facilities were simple and not capable of technically complex reclamation. However, the complexity of HCFC reclamation from Article V countries' equipment and appliances has no bearing on the proposed petitioning process, because the process only applies to the import of used HCFCs and not the import of equipment containing HCFCs; therefore, EPA is finalizing this proposed basis for issuing an objection notice. EPA would not want to circumvent the efforts of Article 5 countries in establishing their own HCFC management plans. EPA believes that if it allowed the import of used HCFCs from such Article 5 countries that this action might jeopardize the countries' efforts to properly handle used HCFCs and reduce their domestic demand for newly produced material. In today's final action, this reason for objection appears as reason (E).

EPA proposed two reasons for issuing an objection notice that are not included in today's final action. In the proposed rule, reason (F) was: ''If the Administrator has received information indicating that a person listed in the petition has produced at any time false information regarding trade in class II controlled substances as defined in this subpart, including information required by EPA or required by the appropriate government agency in the exporting country.'' Reason (G) was: If the Administrator has received information indicating that a person listed in the petition is in violation of a requirement in any regulation under Title VI of the Clean Air Act.'' Commenters on the proposed changes to the petition process for class I substances objected to the likely use of ''hearsay'' and information ''incorrectly or maliciously'' provided to EPA during its petition review. EPA agrees that the potential for abuse of these reasons by competitors or disgruntled employees is too great. Thus, reasons (F) and (G) are not being included in today's action.

In addition, in this final action EPA has combined two reasons relating to the exporting country's desire not to allow the export. Reason (D) is sufficiently broad to cover both a refusal to grant an export license in a particular instance and a general policy of not allowing exports.

Finally, EPA is modifying the proposed language for § 82.13(g)(3)(iv) to clarify that it is retaining the discretion not to object to a petition. The new language states: ''In cases where the Administrator does not object to the petition based on the criteria listed in paragraph (c)(4)(i) of this section, the Administrator will issue a non-objection notice.''

6. Petition and Non-Objection Letter To Accompany the Shipment

EPA proposed requiring that the petition and the non-objection notice from EPA accompany each shipment through U.S. Customs in the belief that this would facilitate clearance through customs. One commenter believed that in most circumstances no documentation other than labeling accompanies the shipment. This commenter also believed that the paperwork and the shipment are not processed simultaneously and suggested that EPA should require that the documentation be sent to the freight forwarder and accompany the bill of lading. In saying that the non-objection notice must accompany the shipment, EPA intends to require that the non-objection notice be submitted and reviewed by U.S. Customs with all documentation associated with a shipment, *i.e,* the bill of lading and Customs entry form. EPA respectfully disagrees with the commenter's belief that the paperwork does not accompany the shipment as it passes U.S. Customs. EPA frequently receives calls from U.S. Customs port inspectors asking questions about individual shipments of CFCs that are at the port, when the associated bill of lading and Customs entry form are not accompanied by the EPA non-objection notice. When there is no EPA non-objection notice issued for such a shipment, it is seized by U.S. Customs as an illegal import in violation of regulations under authority of the CAA. However, when U.S. Customs inspectors call EPA and the non-objection notice accompanies the bill of lading and the Customs entry form, it is an easier process to ''clear'' the shipment. The Agency wants to note that the commenter did not provide a rationale for why the non-objection notice should not accompany the shipment through U.S. Customs. Because the petitioner must receive the non-objection notice *before* the shipment leaves the foreign country of export, timing cannot be the reason for not including a non-objection notice with a shipment's entry through U.S. Customs. EPA believes requiring that the non-objection notice accompany the shipment's entry will expedite HCFC imports through U.S. Customs.

J. Will There be New Restrictions on Imports To and Exports From Specific Parties?

At the eleventh meeting in 1999, the Parties agreed to an amendment to the Protocol requiring that, beginning January 1, 2004, each Party shall ban HCFC imports from and exports to countries that have not ratified the amendments with control measures for HCFCs relevant to that country. This ban reflects a strategy by the Parties to encourage ratification of the Protocol

and each successive package of amendments. EPA proposed to make its HCFC regulations consistent with this provision by including a ban on import or export of any quantity of HCFCs from or to any state that was not a Party to the Copenhagen Amendments, unless that state was complying with the Copenhagen Amendments.

Only one commenter requested clarification concerning allocation rights of an importer of record that previously imported from a non-Party. EPA agrees with the commenter's assumption that all consumption allowances allocated to importers are valid upon promulgation of the rule. However, beginning January 1, 2004, EPA notes that these allowances may only be expended to produce for export to, or to import from, Parties that are either: (1) Listed in Appendix L and have ratified the Beijing Amendments as listed in Appendix C, or (2) not listed in Appendix L but are listed in Appendix C as having ratified the Copenhagen Amendments.

EPA will allow trade with all Parties upon promulgation of this rule, but on January 1, 2004, trade will be restricted to Parties that are either: (1) Listed in Appendix L and have ratified the Beijing Amendments as listed in Appendix C, or (2) not listed in Appendix L but are listed in Appendix C as having ratified the Copenhagen Amendments, or (3) listed in Appendix C, Annex 2 of the Protocol, as complying with the Beijing Amendments if the foreign state is listed in Appendix L, or as complying with the Copenhagen Amendments if the foreign state is not listed in Appendix L. The UNEP Web site maintains a real-time list of current Parties to the Protocol and all its amendments for those wishing to ensure they are viewing the most current list. The Internet address is: *http://www.unep.org/ozone/ratif.shtml.*

K. Will There Be Changes in Definitions?

Because some of the definitions referred only to class I substances and new definitions were necessary to explain provisions for HCFCs, EPA proposed modifications to the existing definitions and the addition of new definitions to § 82.3.

1. Modifications

EPA proposed modifying the definitions for the following terms to include HCFCs: ''baseline consumption allowances''; ''baseline production allowances''; ''consumption allowances''; ''production allowances''; and ''Article 5 allowances.'' There were no comments on these modifications.

Since the following terms do not apply to HCFCs, EPA proposed modifying them to make them explicitly apply to class I substances only: ''destruction credits''; and ''transformation credits.'' There were no comments and the Agency notes that the statutory time period in which a person could obtain these credits for class I controlled substances has passed, so is removing them from the rule.

EPA proposed modifying the definition for ''Party'' to include an example relating to the HCFC trade ban that the Parties agreed to in the 1999 Beijing Amendments. One commenter stated that the example implied that the term ''Party'' as used in provisions based on the Beijing Amendments includes foreign states that have not ratified the Beijing Amendments and requested that EPA clarify the example. This commenter believed that trade in HCFCs should only be permitted among foreign states that have ratified the 1999 Beijing Amendments. EPA agrees that the example in the proposed definition was confusing. In fact, EPA interprets the HCFC trade ban provisions agreed to in the 1999 Beijing Amendments as limiting imports from and exports to Parties that are either: (1) Listed in Appendix L and have ratified the Beijing Amendments as listed in Appendix C, or (2) not listed Appendix L but are listed in Appendix C as having ratified the Copenhagen Amendments. Therefore, with today's action the example is being removed from the definition of Party.

2. Additions

EPA proposed adding the following new definitions: ''export production allowances''; ''unexpended export production allowances''; ''individual shipment''; ''non-objection notice''; ''source facility.'' With today's action, EPA is replacing the concept of ''space vehicle/defense allowances'' with the broader concept of ''HCFC–141b exemption allowances.'' Accordingly, EPA is adopting definitions for ''HCFC–141b exemption allowances'' and ''unexpended HCFC–141b exemption allowances'' in lieu of ''space vehicle/defense allowances'' and ''unexpended space vehicle/defense allowances.''

EPA also proposed to adopt definitions for ''individual shipment,'' ''non-objection notice,'' and ''source facility'' as part of a separate rulemaking involving changes to the petition process for used class I substances (63 FR 41627). EPA has taken into consideration comments received in the course of that rulemaking prior to adopting these definitions in final form. In the class I rulemaking, EPA received one comment on the definition of ''individual shipment.'' The comment asked for a clarification of the phrase ''not to be dis-aggregated,'' which appeared in the definition as initially proposed. The comment also pointed out an inconsistency between this phrase and the phrase ''not to be aggregated,'' which appeared in the initial paragraph under § 82.13(g)(2) and the proposed § 82.24(c)(3). With this action, EPA is adding a definition of ''individual shipment'' to § 82.3 that does not employ the phrase ''not to be dis-aggregated'', and is removing the phrase ''not to be aggregated'' from the proposed language for § 82.24(c)(3). The intent of the definition continues to be the same as explained in the rule published in the **Federal Register** on August 4, 1998 (63 FR 41627); that an importer shall submit a petition to import a specific quantity of used class I controlled substance as a single U.S. Customs entry. If an importer cannot arrange for the entire quantity to be shipped as one entry through U.S. Customs, the importer is required to submit to EPA a separate petition for the quantity of each individual U.S. Customs entry of a used controlled substance.

One commenter on the proposed petition process for used class II controlled substances believed EPA should clarify whether the definition of ''individual shipment'' may include a shipment that is the aggregate of many other shipments of used HCFCs. The commenter requested that EPA detail the documentation required for such an aggregated shipment. ''Individual shipment'' as it pertains to the threshold quantity requiring a petition means the total weight in kilograms of the HCFC that the petitioner wishes to import into the United States at one specific instance and that can be imported as a single U.S. Customs entry. Petitioners who wish to aggregate HCFCs from different sources into one ''individual shipment,'' must make certain that their petition has the required multiple source information that makes up the individual shipment. For example, an importer that petitions the Agency to import an individual shipment of used HCFCs from more than one source must itemize the petition requirements applicable to each source. This itemization will be done based on the weight contribution of each source to the individual shipment. If the individual shipment consists of different HCFCs from multiple sources, EPA will respond in writing regarding each quantity of each specific HCFC. For example, if an individual shipment

consists of HCFC–22 and HCFC–123, EPA will cite the quantity for each substance in one notice.

In the rulemaking to change the petition process for used class I substances, EPA received one comment on the proposed definition of ''source facility.'' As proposed, that definition reads as follows: ''the exact location at which a used controlled substance was recovered from a piece of equipment, including the name of the company responsible for, or owning the location, a contact person at the location, the mailing address for that specific location, and a phone number and a fax number for the contact person at the location.'' The commenter stated that the phrase ''exact location'' is too specific, believing that it could refer to the valve or fitting on the piece of equipment from which the used controlled substance is recovered. The commenter pointed out that the valve or fitting will not have a mailing address. The commenter suggests replacing the phrase ''exact location'' with the word ''site.'' EPA believes there may be some merit to the commenter's concern about the specificity of the proposed phrase. EPA's intent was to refer to the postal address of the owner of the equipment from which the ozone-depleting substance was recovered, not the exact location of the specific piece of equipment. However, to maintain the consistency of the wording within the definition, EPA is replacing the phrase ''exact location'' with the word ''location'' rather than site.

L. Will Other Regulatory Options Be Used To Control HCFCs?

Other authorities under Title VI are available to ensure that the U.S. complies with its phaseout schedule for HCFCs. These programs include the SNAP program, labeling of products made with ODSs, and the ban on non-essential products containing ODSs. These programs affect the sale and/or use of HCFCs rather than their production, import, and export. The allowance system directly affects the production, import, and export of HCFCs.

Eight commenters were unanimous in their belief that implementing these provisions to maintain compliance with the Protocol cap was unnecessary.

1. Labeling

Under Section 611 of the Act, EPA could require labels on products containing or made with HCFCs before January 1, 2015. Beginning on that date, all products containing or manufactured with HCFCs must bear a label indicating the association with a substance that harms public health and the environment by destroying ozone in the upper atmosphere.

EPA did not propose to use labeling to discourage HCFC usage and to ensure compliance with the Protocol. Nine commenters agreed with the EPA position. At this time, EPA will not use labeling to further control HCFCs but will continue to evaluate the potential benefit of labeling requirements. Future action, if pursued, would be done through notice and comment rulemaking.

2. SNAP Approval and Restrictions

The Significant New Alternatives Policy program as authorized by Section 612 of the Act publishes lists of acceptable and unacceptable substitutes for HCFCs. In some SNAP sector end-uses, HCFCs have been listed as acceptable substitutes, but the availability of zero-ODP alternatives has increased in some of these uses. It is therefore possible that SNAP determinations regarding existing HCFC acceptable uses could be revised.

EPA did not propose to include any SNAP-related provisions in this rule. Seven of the eight commenters on regulatory options agreed with the EPA decision not to include SNAP-related provisions in this rule. The eighth commenter was silent on this issue. Although EPA is not including any SNAP provisions with the allowance system, it is possible that future independent SNAP approvals and restrictions might affect HCFC production and consumption.

3. Non-Essential Products Ban

Section 610(d) of the Act prohibits the sale, distribution, or offer for sale or distribution in interstate commerce, of certain non-essential products that contain or are made with HCFCs. EPA is authorized to grant exceptions to the ban under certain conditions.

EPA did not propose any provisions that would use the non-essential products ban to ensure compliance with the HCFC caps under the Protocol. Five of the eight commenters on regulatory options agreed with this decision; the other three were silent on the issue of a Section 610(d) ban. Although EPA is not including provisions in this rule relating to the non-essential products ban, it is possible that future independent evaluations of whether certain products containing or manufactured with HCFCs qualify as non-essential products might affect HCFC consumption.

M. Will There Be Consumption Allowance Credits for Reductions of HCFC Production By-Products Regulated by Title VI?

EPA realizes that there is at least one case where the production of an HCFC creates a by-product that is also regulated under Title VI of the Act. In an effort to encourage emissions reductions of such by-products, EPA has explored incentives for voluntary reductions. EPA sought comment on a proposal to provide one production allowance and one consumption allowance to producers of HCFCs for each kilogram of by-product that is reduced. Allowances could be granted only to the extent available under the cap. Only one commenter was in favor but stated that EPA would have to be certain that adequate allowances were available after the new entrant allocations are calculated. This commenter felt that such an incentive approach would be difficult to monitor and verify. Because there was not widespread support for the proposal and the Agency agrees that adequate monitoring will be difficult, EPA is not reserving any remaining allowances under the cap as an incentive to reduce by-products regulated under Title VI in the production of HCFCs.

N. What Will the Reporting and Recordkeeping Requirements Be?

EPA proposed reporting and recordkeeping requirements similar to those used for class I substances. The requirements include quarterly reports listing each chemical and the quantities (in kilograms) produced, imported, exported, transformed, and destroyed. In order to allow EPA to gather more accurate and timely HCFC market information and fulfill its reporting obligations under the Protocol, EPA proposed to expand the basic reporting and recordkeeping requirements for HCFC transactions that have been in place since 1996.

Five commenters felt the proposed reporting and recordkeeping requirements were excessive or overly burdensome and unnecessary. Three commenters stated that the proposal to require reporting within 15 days after each quarter failed to provide companies sufficient time to gather the information required and to ensure the accuracy of the data. The current regulations require reporting within 45 days after each quarter. EPA has requested that companies report within 15 days after each quarter during 2001 instead of the required 45 days so it could better monitor quarterly consumption figures. Most companies

were able to comply with this request, allowing EPA to track whether domestic consumption was close to the U.S. consumption cap. However, EPA wishes be responsive to the commenters' concern that 15 days is insufficient time. Therefore, with today's action, EPA is requiring reporting within 30 days after each quarter. EPA believes that this is a sufficient period of time to allow companies to gather the information and ensure its accuracy before submission to EPA. EPA has decided not to retain the current 45-day reporting requirement because of the continuing need to monitor compliance with the U.S. consumption cap as closely as possible.

Three commenters were concerned that certain proposed reporting requirements may involve the provision of highly confidential business information. EPA will treat all business information submitted under the HCFC reporting requirements in accordance with the confidential business information provisions at 40 CFR Part 2, Subpart B.

One commenter suggested that supplying hard copies of the records EPA requires, such as the quarterly reports, may demand more human resources than anticipated since these documents are not readily available through normal business electronic systems. EPA has doubled the reporting period from the proposed 15 days to 30 days to allow more time for filing quarterly reports. This commenter suggested that allowance holders with computer records be allowed to supply a minimal number of hard copies and allow the computerized records to provide the first level of recourse to resolve discrepancies. EPA is making the forms available electronically, as a first step. In addition, EPA is working to make it possible for people to complete the forms electronically with special guidance on a ''file naming protocol.'' EPA wants to create this ''file naming protocol'' so forms completed electronically by producers and importers can be saved with similar nomenclature for transmission to EPA by email. For example, the company, Acme Ltd., might complete the third-quarter importer's report electronically and save the document with the name 3Q_ImpR_Acme and send it, by email, to EPA. The Agency believes guidance on a ''file naming protocol'' will ease the process for electronically filing, searching and identifying forms for both the Agency and companies, and be especially helpful if a question arises about information in a specific form. EPA will strive to have forms available that can be completed electronically by the regulatory deadline for submission of the first-quarter reports (30 days after the end of the quarter in 2003), and will make every effort to have them available no later than for submission of second-quarter reports. Concurrent with the process for making it possible to electronically complete forms for submission by email, EPA is pursuing technical and logistical questions about creating a secure Web-based system for direct electronic reporting of data. If EPA deems that it is feasible and efficient to create a secure Web-based database for direct electronic reporting, then EPA will work to bring such a system online by 2004. This commenter also suggested that records should be maintained for two years rather than the three years proposed by EPA. However, 3 years is the standard retention period for records concerning both class I and class II controlled substances. (40 CFR 82.13(d)). EPA is not changing this pre-existing requirement in this final rule.

In order to ensure that EPA reports accurate information to the Montreal Protocol on behalf of the U.S., the Agency requires that companies send revisions to reports no more than 180 days after the due date for the specific report. EPA reports data on U.S. national production and consumption of controlled substances in accordance with obligations under Article 7 of the Montreal Protocol. This information is used by the Parties to assess compliance with phaseout obligations under Article 2 of the Protocol. To ensure accuracy in U.S. data reported under Article 7 of the Protocol, EPA requests that companies limit revisions to their reporting to no longer than 180 days after the required submission date under § 82.24.

1. Producers

For determining violations, EPA proposed to assume a company had produced at full capacity during a control period if the producer failed to keep records of production or failed to submit reports on production for that control period. One commenter suggested that EPA consider notifying the company and allow the company 30 days in which to comply before assuming the company had produced at full capacity. The commenter believed that such a grace period would alleviate a potentially harsh sanction for inadvertent non-compliance or difficulty in obtaining the required information in a timely manner. If a producer determines that it is unable to report in 30 days because of difficulty in obtaining information, it should immediately notify EPA and give EPA an estimate of when it can comply with the reporting requirements. U.S. producers have been required to report to EPA since 1996 but inadvertent non-compliance after many years of experience may still occur. EPA currently contacts producers after the end of the reporting period if a report has not been filed. Under the new 30-day reporting period, companies will be notified if a report has not been received after 30 days due to inadvertent non-compliance. The producer will be allowed an additional 15 days in which to file a report, after which the determination of violations will begin.

One commenter wondered whether a bill of lading would be sufficient verification of an export to an affiliate in an Article 5 country for expending Article 5 allowances since EPA proposed requiring written verification. For recordkeeping purposes, EPA will accept a bill of lading as proof of export to an affiliate in an Article 5 country.

Two commenters believed that the 100-pound recordkeeping threshold for spills or releases of HCFCs should not include Toxic Release Inventory quantities for fugitive emissions. EPA agrees that producers need not include Toxic Release Inventory quantities for fugitive emissions. In addition, EPA is clarifying that this recordkeeping requirement applies only to spills or releases that occur while the producer has title to the chemical.

With respect to the proposed reporting requirement at § 82.24(b)(1)(vi), a producer pointed out that it sometimes sells to wholesalers who may export a portion of the shipment intended for transformation or destruction and the producer may not be aware of it. The commenter believed that producers should not be accountable for reporting these sales and that their responsibility should be limited to those shipments where the ''Ship to'' destination is to a foreign entity. EPA agrees that the producer need only report the names and quantities of HCFCs exported by that producer and has removed the phrase ''or by other U.S. persons'' from the reporting requirement.

2. Exporters

A producer that manufactures for the export market questioned whether it needed to supply the source of the HCFC and the date it was purchased if it was shipping directly to its own affiliate in another country. EPA believes interactions between a U.S. producer and an overseas affiliate probably generate some form of paperwork to document the manufacture of an HCFC that is subsequently exported to the affiliate. The producer/exporter may substitute

this paperwork that is already generated to document an ''order'' for an HCFC to be exported to an overseas affiliate in lieu of an invoice.

3. Transformation and Destruction

Three commenters requested that EPA clearly state that HCFCs used as feedstocks; HCFC heels in tank trailers, cylinders, and drums; and used HCFCs are exempted from the rule. Two of the three commenters suggested eliminating the proposed recordkeeping and reporting requirements associated with these exemptions. Section 82.15 (prohibitions for class II control substances) in the rule exempts the production and import of HCFCs for transformation or destruction purposes. That same section exempts the import of transhipments, heels, and used HCFCs from the prohibitions. EPA believes no further clarification of these exemptions is necessary. Although there are no allowances associated with feedstock, heels, and used HCFCs, the Protocol requires reporting of these quantities by each of the Parties. Therefore, EPA needs to obtain basic information regarding such activities. Accordingly, EPA is adopting the reporting and recordkeeping requirements as proposed.

Another commenter on the proposed requirement that producers maintain dated records for HCFCs used as feedstock proposed that production records be enough to satisfy this requirement. Under the Protocol and CAA, quantities of HCFCs used for feedstock are exempt from calculations of production and consumption. However, in accordance with obligations under the Protocol EPA must report the total amount of HCFCs produced, imported and exported for use as a feedstock during a calendar year to the Parties. The intent of monitoring feedstock quantities is to ensure there is no abuse of the exemption. Because feedstock quantities can be produced, imported and exported in one year and may not actually be transformed during that same calendar year EPA is retaining the requirement that producers, importers and exporters submit a transformation verification for class II controlled substance as proposed.

A commenter on reporting requirements for those purchasing HCFCs for transformation felt a change in timing for transformation should not require a revised verification since inventory fluctuations might influence the decision to transform. The proposed requirement calls for a ''period of time over which the person intends to transform'' the HCFCs rather than a specific date. The person reporting may estimate the period of time during which the transformation might take place rather than report a specific date, however, the Agency is not requiring a re-submission of the verification as proposed if the timing happens to change.

A commenter on the reporting of transformation or destruction believed that submitting invoices or sales agreements 15 days after the end of the quarter might be difficult and suggested that this be changed to a recordkeeping requirement. EPA has expanded the reporting period from 15 days to 30 days to allow the exporter more time to submit the required paperwork. This is especially important at the end of the fourth quarter, when the annual figures are compiled and any discrepancies might occur. EPA is retaining this as a reporting, rather than a recordkeeping, requirement in order to meet U.S. reporting obligations under the Protocol.

4. Heels

One producer suggested that heel weights be excluded from the reporting requirements in § 82.24(f) since the company does not normally record these quantities in rail car shipments or tank trucks. The commenter adds that it is possible to record the heels remaining in rail cars because tare weights are assigned. The commenter feels that heels in tank trucks are irrelevant because customers are only billed for the net amount of HCFCs delivered. The commenter believes that reporting of heels that are not normally recorded will result in additional cost and provide little environmental benefit.

EPA believes that the supplier and the customer both possess information regarding the total mass (weight) for the container, whether it be a tank truck or a rail car. As suggested by the commenter, the residual quantity (heel) in a rail car is the difference between the empty weight of the rail car and the tare weight after a delivery. Suppliers very typically determine the weight of a rail car or tank truck after a delivery to be able to know the how much to bill the customer (weight before the delivery minus weight after the delivery = amount delivered). The residual quantity (heel) in a tank truck would be calculated in the same manner; the difference between the empty weight of the tank truck and the tare weight after the delivery. EPA believes that determining the residual quantity (heel) in this manner will not result in additional cost to the supplier.

The industry rule of thumb is that a heel is up to ten percent of the volume of the container. If the residual quantity entering the United States is ten percent or less of the total volume, the residual quantity may be considered a heel. The supplier may certify that the heel will remain in the container and be included in a future shipment; be recovered and transformed; be recovered and destroyed, or be recovered for a non-emissive use. If the residual quantity entering the United States is greater than ten percent, then it may not be considered a heel and the importer will be required to expend consumption allowances. Non-reporting of residual quantities greater than ten percent of the total volume provides the supplier with additional consumption allowances it has not been granted and compromises the environmental benefits of the phaseout.

The commenter requests that EPA clarify that ''heels'' do not apply to small containers but only to bulk shipments because cylinders and small containers are by definition returned empty and are not weighed. In most cases, they are presumed empty; in some cases, they are vented to a thermal oxidizer before being refilled. No residual quantity, whether in small containers or large ISO tanks, can qualify as a heel unless it represents ten percent or less of the volume of the container.

The same commenter requested that the notice the Department of Transportation mandates in 49 CFR 172.203(e)(1&2) for bulk shipments precede the heel weight on the bill of lading. EPA agrees with the commenter that the heel weight may follow the notice ''RESIDUE: Last Contained * * *'' on the bill of lading.

The commenter noted that an invoice seldom accompanies a heel and that U.S.-mandated labeling of a shipping container from an Article 5 country may be a particular problem. EPA requests the heel weight be indicated on the bill of lading or the invoice to allow the importer more than one place on which to record the heel weight in case one or the other document is not available. EPA will monitor the ability of Parties, especially Article 5 countries, to include U.S.-mandated information on the documents accompanying heels to determine if further refinements are necessary.

IV. Administrative Requirements

A. Executive Order 12866

Under Executive Order 12866 (58 FR 51735, October 4, 1993), the Agency must determine whether this regulatory action is ''significant'' and therefore subject to Office of Management and Budget (OMB) review and the

requirements of the Executive Order. The Executive Order defines ''significant regulatory action'' as any regulatory action that is likely to result in a rule that may:

(1) Have an annual effect on the economy of $100 million or more or adversely affect in a material way the economy, a sector of the economy, productivity, competition, jobs, the environment, public health or safety, or State, local, or tribal governments or communities;

(2) Create a serious inconsistency or otherwise interfere with an action taken or planned by another agency;

(3) Materially alter the budgetary impact of entitlements, grants, user fees, or loan programs or the rights and obligations of recipients thereof; or,

(4) Raise novel legal or policy issues arising out of legal mandates, the President's priorities, or the principles set forth in the Executive Order.

It has been determined by OMB that this action is a ''significant regulatory action'' under the terms of Executive Order 12866 and is therefore subject to OMB review under the Executive Order even though the annual effect on the economy is expected to be less than $100 million. This document was reviewed by OMB and changes recommended by OMB have been made and documented for the public record.

B. Executive Order 13045: Children's Health Protection

Executive Order 13045: ''Protection of Children from Environmental Health Risks and Safety Risks'' (62 FR 19885, April 23, 1997) applies to any rule that: (1) Is determined to be ''economically significant'' as defined under Executive Order 12866, and (2) concerns an environmental health or safety risk that EPA has reason to believe may have a disproportionate effect on children. If the regulatory action meets both criteria, the Agency must evaluate the environmental health or safety effects of the planned rule on children, and explain why the planned regulation is preferable to other potentially effective and reasonably feasible alternatives considered by the Agency.

EPA interprets Executive Order 13045 as applying only to those regulatory actions that are based on health or safety risks, such that the analysis required under Section 5–501 of the Order has the potential to influence the regulation. This final rule is not subject to Executive Order 13045 because it implements specific phaseout schedules established under the CAA and the Montreal Protocol.

C. Executive Order 13132: Federalism

Executive Order 13132, entitled ''Federalism'' (64 FR 43255, August 10, 1999), requires EPA to develop an accountable process to ensure ''meaningful and timely input by State and local officials in the development of regulatory policies that have federalism implications.'' ''Policies that have federalism implications'' is defined in the Executive Order to include regulations that have ''substantial direct effects on the States, on the relationship between the national government and the States, or on the distribution of power and responsibilities among the various levels of government.''

This final rule does not have Federalism implications. It will not have substantial direct effects on the States, on the relationship between the national government and the States, or on the distribution of power and responsibilities among the various levels of government, as specified in Executive Order 13132. The requirements in this document are directed to economic entities that either produce, import, export, transform, destroy or use HCFCs in very narrow applications, and not to State or local governments. Thus, Executive Order 13132 does not apply to this rule.

D. Executive Order 13175: Consultation and Coordination with Indian Tribal Governments

Executive Order 13175, entitled ''Consultation and Coordination with Indian Tribal Governments'' (65 FR 67249, November 6, 2000), requires EPA to develop an accountable process to ensure ''meaningful and timely input by tribal officials in the development of regulatory policies that have tribal implications.''

This final rule does not have tribal implications, as specified in Executive Order 13175. Thus, Executive Order 13175 does not apply to this rule.

The requirements in this final rule are directed to economic entities that either produce, import, export, transform, destroy, or use HCFCs in very narrow applications, and not to Indian tribal governments or their communities.

E. Executive Order 13211: Energy Effects

This rule is not a ''significant energy action'' as defined in Executive Order 13211, ''Actions Concerning Regulations That Significantly Affect Energy Supply, Distribution or Use'' (66 FR 28355 (May 22, 2001)) because it is not likely to have a significant adverse effect on the supply, distribution, or use of energy. Further, we have concluded that this rule is not likely to have any adverse energy effects because the phaseout timetable for HCFCs, originally established in 1993, occurs over many decades giving industries long planning horizons for changing to alternative substances and for adjusting new technologies. Over this long time horizon, industries are re-tooling and maximizing energy efficiencies. Switches from HCFCs to alternative substances and new technologies that have already taken place, or are in process, are resulting in energy savings for the manufacturer and the consumer.

F. Congressional Review Act

The Congressional Review Act, 5 U.S.C. 801 *et seq.*, as added by the Small Business Regulatory Enforcement Fairness Act of 1996, generally provides that before a rule may take effect, the agency promulgating the rule must submit a rule report, which includes a copy of the rule, to each House of the Congress and to the Comptroller General of the United States. EPA will submit a report containing this rule and other required information to the U.S. Senate, the U.S. House of Representatives, and the Comptroller General of the United States prior to publication of the rule in the **Federal Register**. A Major rule cannot take effect until 60 days after it is published in the **Federal Register**. This action is not a ''major rule'' as defined by 5 U.S.C. 804(2). This rule will be effective upon publication.

G. National Technology Transfer and Advancement Act

As noted in the proposed rule, Section 12(d) of the National Technology Transfer and Advancement Act of 1995 (''NTTAA''), Pub L. 104–113, Section 12(d) (15 U.S.C. 272 *note*) directs EPA to use voluntary consensus standards in its regulatory activities unless to do so would be inconsistent with applicable law or otherwise impractical. Voluntary consensus standards are technical standards (*e.g.*, materials specifications, test methods, sampling procedures, and business practices) that are developed or adopted by voluntary consensus standards bodies. The NTTAA directs EPA to provide Congress, through OMB, explanations when the Agency decides not to use available and applicable voluntary consensus standards.

This action does not involve technical standards. Therefore, EPA did not consider the use of any voluntary consensus standards.

H. Paperwork Reduction Act

The information collection requirements in this rule [have been (or will be)] submitted for approval to the

Office of Management and Budget (OMB) under the Paperwork Reduction Act, 44 U.S.C. 3501 *et seq.* An Information Collection Request (ICR) document has been prepared by EPA (ICR No. 2014.01) and a copy may be obtained from Sandy Farmer, Collection Strategies Division; U.S. Environmental Protection Agency (2822); 1200 Pennsylvania Ave., NW., Washington, DC 20460 or by calling (202) 260–2740. The information requirements are not effective until OMB approves them.

The recordkeeping and reporting requirements in this rule are similar to those used in the class I allowance system that has been in place for several years. The information collected will be utilized to monitor business compliance with the class II allowance system. The information will also be used to comply with the reporting requirements agreed to by the Parties to the *Montreal Protocol on Substances that Deplete the Ozone Layer.* The information is intended to ensure that the U.S. meets its obligations to control and administer the phaseouts of HCFCs under the Protocol and the CAA Amendments of 1990.

Reporting requirements mandated in Section 603 of the CAA relative to HCFCs are currently in place in 40 CFR 82.13(n) and (o). This rule contains new recordkeeping requirements and expanded reporting requirements to ensure accurate expenditures of allowances and trades of allowances. Responses to the collection of information are mandatory pursuant to Section 114 of the CAA.

Information collected from businesses may be claimed as confidential by clearly identifying the material as confidential. Such information will be treated in accordance with EPA's procedures for handling information claimed as confidential under 40 CFR Part 2, Subpart B and will only be disclosed by the means set forth in that subpart.

It is estimated that the annual reporting burden for producers is 1,132 hours and for importers it is 1,800 hours. This includes maintaining records, preparing and submitting quarterly reports on production, import, exports, and claims for transfers of allowances and offsets. The average burden hours per response is estimated to be between 283 and 450 hours. The proposed frequency of response is four times per year and the likely number of respondents will be 7 producers and 14 importers, although some of the producers and some of the importers also function as exporters. The only industry requirements for the start-up phase are an evaluation of the impact of the allowance system and the development of a plan of action. The start-up burden is estimated to be 910 hours for producers and 1,820 hours for importers.

Start-up costs are estimated to amount to $219,108, after which annual industry cost is estimated to be $253,089 to maintain records of production, import, and export; submit quarterly reports to EPA on production, import and export; provide additional information requested by EPA; prepare transfer claims; and submit petitions to import used HCFCs. The latter two functions are not periodical tasks but are initiated by the person based on business decisions.

In order to receive the benefit of HCFC–141b exemption allowances, HCFC–141b formulators and U.S. agencies, departments or instrumentalities, or related entities involved in space vehicle endeavors are being asked to petition the Agency annually for exemption to produce or import HCFC–141b beyond the January 1, 2003 phaseout date. The approximate number of petitioners is likely to be 15–20 entities. EPA is requiring that the entities supply technical descriptions of the processes in which HCFC–141b is being used, the areas where the product will be applied, and why alternatives and substitutes are not sufficient to eliminate the use of HCFC–141b. EPA is also requiring that entities supply a detailed analysis showing why stockpiled, recovered, or recycled quantities are not technically feasible for use and a detailed description of continuing investigations into and progress on possible alternatives and substitutes by the applicants.

Entities granted HCFC–141b exemption allowances for the production of HCFC–141b products will be required to report semiannually to EPA on the total quantity of HCFC–141b received to date and the name of the supplier. The supplier of HCFC–141b (the ''producer'' or ''importer'' under the regulations) will report quarterly along with their other quarterly reporting to EPA the amount of HCFC–141b supplied to a petitioner granted HCFC–141b exemption allowances and submit copies of the requests. It is estimated that the annual reporting burden for the recipient of the allowances is about 20 hours at a cost of about $864 and the burden for the manufacturer is about 20 hours at a cost of about $1,538.

Burden means the total time, effort, or financial resources expended by persons to generate, maintain, retain, or disclose or provide information to or for a Federal agency. This includes the time needed to review instructions; develop, acquire, install, and utilize technology and systems for the purposes of collecting, validating, and verifying information, processing and maintaining information, and disclosing and providing information; adjust the existing ways to comply with any previously applicable instructions and requirements; train personnel to be able to respond to a collection of information; search data sources; complete and review the collection of information; and transmit or otherwise disclose the information.

An Agency may not conduct or sponsor, and a person is not required to respond to a collection of information unless it displays a currently valid OMB control number. The OMB control numbers for EPA's regulations are listed in 40 CFR Part 9 and 48 CFR Chapter 15.

I. Regulatory Flexibility Act (RFA), as amended by the Small Business Regulatory Enforcement Fairness Act of 1996 (SBREFA), 5 U.S.C. 601 et. seq.

EPA has determined that it is not necessary to prepare a regulatory flexibility analysis in connection with this final rule. EPA has also determined that this rule will not have a significant economic impact on a substantial number of small entities.

For purposes of assessing the impact of today's rule on small entities, small entities are defined as: (1) A small business that is identified by the North American Industry Classification System code (NAICS) in the Table below.

Type of Enterprise	NAICS Code	Size Standard (number of employees)
Organic Chemical Wholesaling	422690	100

(2) a small governmental jurisdiction that is a government of a city, county, town, school district or special district with a population of less than 50,000; and (3) a small organization that is any not-for-profit enterprise which is independently owned and operated and is not dominant in its field.

After considering the economic impacts of today's proposed rule on small entities, EPA has concluded that this action will not have a significant economic impact on a substantial number of small entities.

We have determined that approximately 13 small businesses that are eligible for allowances under this rule, would receive allowances, for which recordkeeping and reporting to

EPA is required. The administrative recordkeeping and reporting these small businesses will experience will amount to an impact of between 0.01 and 0.02 percent of their HCFC revenues alone. When considering that the vast majority deal in numerous chemicals and/or also obtain revenues from services provided, this percentage for the majority would be significantly lower.

Additionally, in this final rule EPA is adopting a petition process for HCFC–141b that is open to all entities. We expect that approximately 15 formulators of HCFC–141b, some which are small businesses, will petition the Agency for HCFC–141b exemption allowances. Those qualifying entities will be granted a benefit in the form of HCFC–141b exemption allowances which allow limited continued production of HCFC–141b beyond the long-established phaseout date. We estimate that each petitioner will experience an impact of .002 percent of revenues.

Although this final rule will not have a significant economic impact on a substantial number of small entities, EPA nonetheless has tried to reduce the impact of this rule on small entities.

With respect to the petition process for HCFC–141b exemption allowances, the economic impact on all affected entities, and especially the economic impact on small entities, has been reduced to every extent possible. For example, EPA has minimized the economic impact by only requesting information that is readily available to all expected to petition. In addition, in all the HCFC–141b uses EPA is aware of, the formulator is responsible for meeting the testing and code requirements as opposed to the end user. Therefore, in order to reduce the burden of petitioning, EPA designed the process so the end user does not need to apply for the exemption allowance.

With respect to the allowance allocation system as a whole, EPA has taken a number of steps to reduce burden and provide flexibility. Although small entities receiving allowance allocations will be subject to the same recordkeeping and reporting requirements as the larger entities, for purposes of tracking allowance trades and expenditures, the small entities will be on the same footing as the larger entities; they will be receiving their best year of activity in the range of years discussed above as a baseline year for determining allowance allocations, and will be able to conduct their business with a degree of certainty in a competitive market. Like the large entities, the small entities will receive allowances for the entire phaseout period, with the necessary adjustments each calendar year to accommodate the required reductions in consumption agreed to by the Parties to the Protocol and the phaseouts of HCFC–22 and HCFC–142b.

EPA believes that the ability to transfer allowances among HCFCs provides the greatest flexibility for small entities to manage their allocation. Unlike the class I system for transfers, there is no restriction to limit inter-pollutant transfers to groups of substances. Inter-pollutant transfers, also known as intra-company transfers or trades, allow a company to shift allowances internally from one HCFC to another to respond to market forces, *e.g.* HCFC–142b allowances for HCFC–22 allowances. Inter-company transfers of allowances are also possible, either on a current-year basis or on a permanent basis. Current-year trades are temporary trades and are reflected in a company's balance of allowances in the control period in which the trade occurs.

By using the phaseout schedules and the option for current-year or permanent trades, a small entity can opt for short-term decisions or long-term decisions concerning the allowances it holds after evaluating its place in the market. In addition, although the CAA requires an offset, EPA is requiring an offset of only 0.1 percent, 0.9 percent less than that required under the class I allowance trading system; such an offset will still provide the environmental benefit required by Congress without penalizing small entities should they wish to avail themselves of transfers. EPA estimates that the burden will be negligible on small businesses, while those same small businesses will gain a marketable asset in their allocated allowances. The actual burden will consist of quarterly reports on production, imports, exports, and allowance trades, as well as paperwork describing any trades in which the business decides to engage. The estimated recordkeeping and quarterly reporting burden on the affected small businesses will be about 40 hours per year per business, at an estimated cost of $3,070. Each trade made at the discretion of the small business will add a burden of 4 hours at a cost of $307, basing the calculation on a cost of $76.88 per hour.

In the proposal EPA notified the industry that late entrants to the HCFC market could still be allocated allowances if they provided proper documentation. One small entity provided sufficient information and is allocated allowances in today's action. EPA also carefully reviewed the quarterly reports submitted by other small entities for the baseline years under consideration to ensure that the correct quantities have been ascribed to each entity for each year. EPA consulted with the small entities in order to reconcile any disparities encountered during the record review.

J. Unfunded Mandates Reform Act

Title II of the Unfunded Mandates Reform Act of 1995 (UMRA), Public Law 104–4, establishes requirements for Federal agencies to assess the effects of their regulatory actions on State, local, and tribal governments and the private sector. Under Section 202 of the UMRA, EPA generally must prepare a written statement, including a cost-benefit analysis, for proposed and final rules with ''Federal mandates'' that may result in expenditures to State, local, and tribal governments, in the aggregate, or to the private sector, of $100 million or more in any one year. Before promulgating an EPA rule for which a written statement is needed, Section 205 of the UMRA generally requires EPA to identify and consider a reasonable number of regulatory alternatives and adopt the least costly, most cost-effective or least burdensome alternative that achieves the objectives of the rule. The provisions of Section 205 do not apply when they are inconsistent with applicable law. Moreover, Section 205 allows EPA to adopt an alternative other than the least costly, most cost-effective or least burdensome alternative if the Administrator publishes with the final rule an explanation why that alternative was not adopted. Before EPA establishes any regulatory requirements that may significantly or uniquely affect small governments, including tribal governments, it must have developed under Section 203 of the UMRA a small government agency plan. The plan must provide for notifying potentially affected small governments, enabling officials of affected small governments to have meaningful and timely input in the development of EPA regulatory proposals with significant Federal intergovernmental mandates, development of EPA regulatory proposals with significant Federal intergovernmental mandates, and informing, educating, and advising small governments on compliance with the regulatory requirements.

Today's rule contains no Federal mandates (under the regulatory provisions of Title II of the UMRA) for State, local, or tribal governments or the private sector that may result in expenditures of $100 million or more in any one year. Entities in the private sector that either produce, import, export, transform, destroy or use HCFCs in very narrow applications will be

operating under an allowance allocation system very similar to the system selected for CFCs (53 FR 30566, August 12, 1988). The CFC allowance allocation system was determined to be the most economically efficient, market-based, and simple to administer in meeting the requirements of the Protocol. Recordkeeping for HCFCs will be similar to that for CFCs but will be somewhat simplified due to the absence of essential use allowances, destruction credits, and transformation credits. The experience gained by those entities familiar with the CFC allowance allocation system will carry over in the class II allowance allocation system.

In addition, the UMRA does not apply to rules that are necessary for the national security or the ratification or implementation of international treaty obligations. As a Party to the Protocol, the U.S. must comply with the phaseout schedule for HCFCs created in 1992 the consumption cap for HCFCs established in 1996. This final rule contains provisions to implement these obligations.

Thus, this rule is not subject to the requirements of Sections 202 and 205 of the UMRA.

List of Subjects in 40 CFR Part 82

Environmental protection, Administrative practice and procedure, Air pollution control, Chemicals, Chlorofluorocarbons, Exports, Hydrochlorofluorocarbons, Imports, Reporting and recordkeeping requirements.

Dated: December 18, 2002.

Christine Todd Whitman,

Administrator.

For the reasons stated in the preamble, 40 CFR part 82 is amended as follows:

PART 82—PROTECTION OF STRATOSPHERIC OZONE

1. The authority citation for Part 82 continues to read as follows:

Authority: 42 U.S.C. 7414, 7601, 7671–7671q.

Subpart A—Production and Consumption Controls

2. Amend § 82.3 as follows:

a. Revise the section heading.

b. Revise the definitions for ''Article 5 allowances'', ''Baseline consumption allowances'', ''Baseline production allowances'', ''Confer'', ''Consumption allowances'', ''Party'', ''Production allowances.''

c. Remove the definitions for ''Destruction credits'', and ''Transformation credits.''

d. Add new definitions in alphabetical order for the terms ''Export production allowances'', ''Formulator'', ''HCFC–141b exemption allowances'', ''Individual shipment'', ''Non-objection notice'', ''Source facility'', ''Space vehicle'', ''Unexpended export production allowances'', and ''Unexpended HCFC–141b exemption allowances''.

The revisions and additions read as follows:

§ 82.3 Definitions for class I and class II controlled substances.

* * * * *

Article 5 allowances means the allowances apportioned under § 82.9(a) and § 82.18(a).

Baseline consumption allowances means the consumption allowances apportioned under § 82.6 and § 82.19.

Baseline production allowances means the production allowances apportioned under § 82.5 and § 82.17.

* * * * *

Confer means to shift the essential-use allowances obtained under § 82.4(t) from the holder of the unexpended essential-use allowances to a person for the production of a specified controlled substance, or to shift the HCFC–141b exemption allowances granted under § 82.16(h) from the holder of the unexpended HCFC–141b exemption allowances to a person for the production or import of the controlled substance.

* * * * *

Consumption allowances means the privileges granted by this subpart to produce and import controlled substances; however, consumption allowances may be used to produce controlled substances only in conjunction with production allowances. A person's consumption allowances for class I substances are the total of the allowances obtained under §§ 82.6 and 82.7 and 82.10, as may be modified under § 82.12 (transfer of allowances). A person's consumption allowances for class II controlled substances are the total of the allowances obtained under §§ 82.19 and 82.20, as may be modified under § 82.23.

* * * * *

Export production allowances means the privileges granted by § 82.18(b) to produce HCFC–141b for export following the phaseout of HCFC–141b on January 1, 2003.

* * * * *

Formulator means an entity that distributes a class II controlled substance(s) or blends of a class II controlled substance(s) to persons who use the controlled substance(s) for a specific application identified in the formulator's petition for HCFC–141b exemption allowances.

* * * * *

HCFC–141b exemption allowances means the privileges granted to a HCFC–141b formulator; an agency, department, or instrumentality of the U.S.; or a non-governmental space vehicle entity by this subpart to order production of or to import HCFC–141b, as determined in accordance with § 82.16(h).

* * * * *

Individual shipment means the kilograms of a used controlled substance for which a person may make one (1) U.S. Customs entry, as identified in the non-objection letter from the Administrator under §§ 82.13(g) and 82.24(c)(4).

* * * * *

Non-objection notice means the privilege granted by the Administrator to import a specific individual shipment of used controlled substance in accordance with §§ 82.13(g) and 82.24(c)(3) and (4).

Party means any foreign state that is listed in Appendix C to this subpart (pursuant to instruments of ratification, acceptance, or approval deposited with the Depositary of the United Nations Secretariat), as having ratified the specified control measure in effect under the Montreal Protocol. Thus, for purposes of the trade bans specified in § 82.4(l)(2) pursuant to the London Amendments, only those foreign states that are listed in Appendix C to this subpart as having ratified both the 1987 Montreal Protocol and the London Amendments shall be deemed to be Parties.

* * * * *

Production allowances means the privileges granted by this subpart to produce controlled substances; however, production allowances may be used to produce controlled substances only in conjunction with consumption allowances. A person's production allowances for class I substances are the total of the allowances obtained under §§ 82.5, 82.7 and 82.9, and as may be modified under § 82.12 (transfer of allowances). A person's production allowances for class II controlled substances are the total of the allowances obtained under § 82.17 and as may be modified under §§ 82.18 and 82.23.

* * * * *

Source facility means the location at which a used controlled substance was recovered from a piece of equipment, including the name of the company responsible for, or owning the piece of

equipment, a contact person at the location, the mailing address for that specific location, and a phone number and a fax number for the contact person at the location.

* * * * *

Space vehicle means a man-made device, either manned or unmanned, designed for operation beyond earth's atmosphere. This definition includes integral equipment such as models, mock-ups, prototypes, molds, jigs, tooling, hardware jackets, and test coupons. Also included is auxiliary equipment associated with tests, transport, and storage, which through contamination can compromise the space vehicle performance.

* * * * *

Unexpended export production allowances means export production allowances that have not been used. A person's unexpended export production allowances are the total of the quantity of the export production allowances the person has authorization under § 82.18(h) to hold for that control period, minus the quantity of class II controlled substances that the person has produced at that time during the same control period.

* * * * *

Unexpended HCFC–141b exemption allowances means HCFC–141b exemption allowances that have not been used. A person's unexpended HCFC–141b exemption allowances are the total of the quantity of the HCFC–141b exemption allowances the person has authorization under § 82.16(h) to hold for that control period, minus the quantity of HCFC–141b that the person has had produced or has had imported at that time during the same control period.

* * * * *

3. Amend § 82.4 as follows:

a. Revise the section heading.

b. Remove paragraphs (n) through (s) and paragraph (u).

c. Redesignate paragraphs (t) through (w) as (n) through (q).

The revision reads as follows:

§ 82.4 Prohibitions for class I controlled substances.

* * * * *

4. Amend § 82.5 as follows:

a. Revise the section heading.

b. Remove paragraph (h).

The revision reads as follows:

§ 82.5 Apportionment of baseline production allowances for class I controlled substances.

* * * * *

5. Amend § 82.6 as follows:

a. Revise the section heading.

b. Remove paragraph (h).

The revision reads as follows:

§ 82.6 Apportionment of baseline consumption allowances for class I controlled substances.

* * * * *

6. Section 82.8 is removed and reserved.

7. Section 82.9 is amended by revising the section heading as follows:

§ 82.9 Availability of production allowances in addition to baseline production allowances for class I controlled substances.

* * * * *

8. Section 82.10 is amended by revising the section heading as follows:

§ 82.10 Availability of consumption allowances in addition to baseline consumption allowances for class I controlled substances.

* * * * *

9. Section 82.11 is amended by revising the section heading as follows:

§ 82.11 Exports of class I controlled substances to Article 5 Parties.

* * * * *

10. Section 82.12 is amended by revising the section heading as follows:

§ 82.12 Transfers of allowances for class I controlled substances.

* * * * *

11. Amend § 82.13 as follows:

a. Revise the section heading;

b. Remove paragraphs (n) and (o).

c. Redesignate paragraphs (p) through (cc) as (n) through (aa).

§ 82.13 Recordkeeping and reporting requirements for class I controlled substances.

* * * * *

12. Add §§ 82.15 through 82.24 to subpart A to read as follows:

§ 82.15 Prohibitions for class II controlled substances.

(a) *Production.* (1) Effective January 21, 2003, no person may produce class II controlled substances in excess of the quantity of unexpended production allowances, unexpended Article 5 allowances, unexpended export production allowances, or conferred unexpended HCFC–141b exemption allowances held by that person for that substance under the authority of this subpart at that time in that control period, unless the substances are transformed or destroyed domestically or by a person of another Party, or unless they are produced using an exemption granted in paragraph (f) of this section. Every kilogram of excess production constitutes a separate violation of this subpart.

(2) Effective January 21, 2003, no person may use production allowances to produce a quantity of class II controlled substance unless that person holds under the authority of this subpart at the same time consumption allowances sufficient to cover that quantity of class II controlled substances. No person may use consumption allowances to produce a quantity of class II controlled substances unless the person holds under authority of this subpart at the same time production allowances sufficient to cover that quantity of class II controlled substances.

(b) *Import.* (1) Effective January 21, 2003, no person may import class II controlled substances (other than transhipments, heels or used class II controlled substances), in excess of the quantity of unexpended consumption allowances, or conferred unexpended HCFC–141b exemption allowances held by that person under the authority of this subpart at that time in that control period, unless the substances are for use in a process resulting in their transformation or their destruction, or unless they are produced using an exemption granted in paragraph (f) of this section. Every kilogram of excess import constitutes a separate violation of this subpart.

(2) Effective January 21, 2003, no person may import, at any time in any control period, a used class II controlled substance, without having submitted a petition to the Administrator and received a non-objection notice in accordance with § 82.24(c)(3) and (4). A person issued a non-objection notice for the import of an individual shipment of used class II controlled substances may not transfer or confer the right to import, and may not import any more than the exact quantity (in kilograms) of the used class II controlled substance stated in the non-objection notice. Every kilogram of import of used class II controlled substance in excess of the quantity stated in the non-objection notice issued by the Administrator in accordance with § 82.24(c)(3) and (4) constitutes a separate violation of this subpart.

(c) Production with Article 5 allowances. No person may introduce into U.S. interstate commerce any class II controlled substance produced with Article 5 allowances. Every kilogram of a class II controlled substance that was produced with Article 5 allowances that is introduced into U.S. interstate commerce constitutes a separate violation under this subpart. No person may export any class II controlled substance produced with Article 5 allowances to a non-Article 5 Party to the Protocol as listed in Appendix E to this subpart. Every kilogram of a class II controlled substance that was

produced with Article 5 allowances that is exported to a non-Article 5 Party to the Protocol as listed in Appendix E of this subpart constitutes a separate violation under this subpart.

(d) Production with export production allowances. No person may introduce into U.S. interstate commerce any class II controlled substance produced with export production allowances. Every kilogram of a class II controlled substance that was produced with export production allowances that is introduced into U.S. interstate commerce constitutes a separate violation under this subpart.

(e) Trade with Parties. Effective January 1, 2004, no person may import or export any quantity of a class II controlled substance listed in Appendix A to this subpart, from or to any foreign state that is not listed as a Party either:

(1) In Appendix L of this subpart and also listed in Appendix C, Annex 1 of the Protocol as having ratified the Beijing Amendments, or

(2) In Appendix C, Annex 1 of the Protocol as having ratified the Copenhagen Amendments but not listed in Appendix L of this subpart, or

(3) In Appendix C, Annex 2 of the Protocol, as being a foreign state complying with the Beijing Amendments if the foreign state is listed in Appendix L of this subpart, or as being a foreign state complying with the Copenhagen Amendments if the foreign state is not listed in Appendix L of this subpart.

(f) Exemptions. (1) Medical Devices [Reserved]

§ 82.16 Phaseout schedule of class II controlled substances.

(a) In each control period as indicated in the following table, each person is granted the specified percentage of baseline production allowances and baseline consumption allowances for the specified class II controlled substances apportioned under §§ 82.17 and 82.19:

Control period	Percent of HCFC–141b	Percent of HCFC–22 & HCFC–142b
2003	0	100
2004	0	100
2005	0	100
2006	0	100
2007	0	100
2008	0	100
2009	0	100

(b) Effective January 1, 2003, no person may produce HCFC–141b except for use in a process resulting in its transformation or its destruction, for export under § 82.18(a) using unexpended Article 5 allowances, for export under § 82.18(b) using unexpended export production allowances, for HCFC–141b exemption needs using unexpended HCFC–141b exemption allowances, or for exemptions permitted in § 82.15(f). Effective January 1, 2003, no person may import HCFC–141b (other than transhipments, heels or used class II controlled substances) in excess of the quantity of unexpended HCFC–141b exemption allowances held by that person except for use in a process resulting in its transformation or its destruction, or for exemptions permitted in § 82.15(f).

(c) Effective January 1, 2010, no person may produce HCFC–22 or HCFC–142b for any purpose other than for use in a process resulting in their transformation or their destruction, for use in equipment manufactured before January 1, 2010, for export under § 82.18(a) using unexpended Article 5 allowances, or for export under § 82.18(b) using unexpended export production allowances, or for exemptions permitted in § 82.15(f). Effective January 1, 2010, no person may import HCFC–22 or HCFC–142b (other than transhipments, heels or used class II controlled substances) for any purpose other than for use in a process resulting in their transformation or their destruction, for exemptions permitted in § 82.15(f), or for use in equipment manufactured prior to January 1, 2010.

(d) Effective January 1, 2015, no person may produce class II controlled substances not previously controlled, for any purpose other than for use in a process resulting in their transformation or their destruction, for use as a refrigerant in equipment manufactured before January 1, 2020, for export under § 82.18(a) using unexpended Article 5 allowances, or for export under § 82.18(b) using unexpended export production allowances, or for exemptions permitted in § 82.15(f). Effective January 1, 2015, no person may import class II controlled substances not subject to the requirements of paragraph (b) or (c) of this section (other than transhipments, heels or used class II controlled substances) for any purpose other than for use in a process resulting in their transformation or their destruction, for exemptions permitted in § 82.15(f), or for use as a refrigerant in equipment manufactured prior to January 1, 2020.

(e) Effective January 1, 2020, no person may produce HCFC–22 or HCFC–142b for any purpose other than for use in a process resulting in their transformation or their destruction, for export under § 82.18(a) using unexpended Article 5 allowances, or for export under § 82.18(b) using unexpended export production allowances, or for exemptions permitted in § 82.15(f). Effective January 1, 2020, no person may import HCFC–22 or HCFC–142b for any purpose other than for use in a process resulting in their transformation or their destruction, or for exemptions permitted in § 82.15(f).

(f) Effective January 1, 2030, no person may produce class II controlled substances, for any purpose other than for use in a process resulting in their transformation or their destruction, for export under § 82.18(a) using unexpended Article 5 allowances, or for exemptions permitted in § 82.15(f). Effective January 1, 2030, no person may import class II controlled substances for any purpose other than for use in a process resulting in their transformation or their destruction, or for exemptions permitted in § 82.15(f).

(g) Effective January 1, 2040, no person may produce class II controlled substances for any purpose other than for use in a process resulting in their transformation or their destruction, or for exemptions permitted in § 82.15(f).

(h) Petition for HCFC–141b exemption allowances.

(1) Effective January 21, 2003, a formulator of HCFC–141b, an agency, department, or instrumentality of the U.S., or a non-governmental space vehicle entity, may petition EPA for HCFC–141b exemption allowances for the production or import of HCFC–141b after the phaseout date, in accordance with this section. The petitioner must submit the following information to the Director of EPA's Office of Atmospheric Programs no later than April 21, 2003, for the 2003 control period; and, for any subsequent control period, no later than October 31st of the year preceding the control period for which the HCFC–141b exemption allowances are requested:

(i) Name and address of the HCFC–141b formulator, U.S. government entity or non-governmental space vehicle entity;

(ii) Name of contact person, phone number, fax number and e-mail address;

(iii) Quantity (in kilograms) of HCFC–141b needed for each relevant calendar year, supported by documentation about past use for at least the previous three years;

(iv) Quantities of HCFC–141b, if any, contained in systems that were sold to other systems houses for at least the previous three years;

(v) Description of the markets and applications served by the use of HCFC–141b or systems based on HCFC–141b;

(vi) Technical description of processes in which HCFC–141b is being used;

(vii) Technical description of the specific conditions under which the product will be applied;

(viii) Technical description of why alternatives and substitutes are not sufficient to eliminate the use of HCFC–141b;

(ix) Amount of stockpiled HCFC–141b (on-hand, taken title to, or available from a supplier) along with a detailed analysis showing why stockpiled, recovered or recycled quantities are deemed to be unavailable, or technically or commercially infeasible for use (for example, taking into consideration undue costs for storage and transportation);

(x) An estimate of the number of control periods over which such an exemption would be necessary;

(xi) A detailed description of continuing investigations into and progress on possible alternatives and substitutes;

(xii) A list of alternatives considered, purchased or sampled, including dates and copies of receipts for verification;

(xiii) A summary of the petitioner's in-house development program including summaries of all relevant test results and their significance to subsequent decision-making and technology selection. Full supporting test data must be available on request including alternative tested and date on which it was tested;

(xiv) A clear statement of the preferred technical option(s) being pursued at the time of the petition and the reasoning for this selection;

(xv) A summary of product test results conducted on the preferred technical option(s) by accredited organizations in order to determine whether products meet applicable codes. Relevant test reports and certifications must be made available on request; and

(xvi) A description of the further development testing to be carried out over the number of control periods identified under paragraph (h)(1)(x) of this section.

(2) Within 21 business days of receipt of the petition, the Director of EPA's Office of Atmospheric Programs will issue to a HCFC–141b formulator, agency, department, or instrumentality of the U.S., or non-governmental space vehicle entity that has petitioned for HCFC–141b exemption allowances, based on information received in accordance with paragraph (h)(1) of this section, a notice indicating one of the following:

(i) A determination by the Director of EPA's Office of Atmospheric Programs to grant a specific quantity of HCFC–141b exemption allowances (in kilograms) for the production or import of HCFC–141b in a specified control period based on an assessment that HCFC–141b is necessary to maintain either safety, or operational or technical viability;

(ii) A determination by the Director of EPA's Office of Atmospheric Programs to request additional information because the information received in accordance with paragraph (h)(1) of this section is not sufficient to decide whether to grant or deny HCFC–141b exemption allowances. The Director of EPA's Office of Atmospheric Programs will decide whether to grant or deny HCFC–141b exemption allowances within 30 days of receipt of the additional information. However, if the petitioner fails to submit the additional information within 20 days of the request, such failure constitutes a basis for denying the petition for HCFC–141b exemption allowances.

(iii) A determination by the Director of EPA's Office of Atmospheric Programs to deny a grant of HCFC–141b exemption allowances due to one or more of the following reasons:

(A) The needs can be met by the use of a substance other than HCFC–141b;

(B) The needs can be met by the use of existing supplies of HCFC–141b;

(C) There is evidence of fraud or misrepresentation;

(D) Approval of the HCFC–141b exemption allowances would be inconsistent with U.S. obligations under the provisions of the Montreal Protocol (including Decisions agreed by the Parties);

(E) Approval of the HCFC–141b exemption allowances would be inconsistent with the Clean Air Act;

(F) There is an inadequate demonstration of efforts undertaken to research and implement alternatives; or

(G) Granting the HCFC–141b exemption allowances may reasonably be expected to endanger human health or the environment.

(3) Within ten working days after receipt of a notice outlining a determination by the Director of EPA's Office of Atmospheric Programs to deny a grant of HCFC–141b exemption allowances due to one or more of the reasons in paragraph (h)(2)(iii) of this section, the petitioner may file with the Director of EPA's Office of Atmospheric Programs a one-time appeal with elaborated information. The Director of EPA's Office of Atmospheric Programs may affirm the determination to deny a grant of HCFC–141b exemption allowances or make a determination to grant HCFC–141b exemption allowance, in light of the available evidence submitted with the appeal. If no appeal is submitted by the tenth day after receipt of the notice outlining a determination by the Director of EPA's Office of Atmospheric Programs to deny a grant of HCFC–141b exemption allowances, the denial will be final on that day.

(4) Any entity that has previously petitioned for HCFC–141b exemption allowances under paragraph (h)(1) of this section may file a petition for renewal for a subsequent control period by October 31st of the year preceding that control period. The petition for renewal must contain the following information:

(i) Name and address of the HCFC–141b formulator, U.S. government entity or non-governmental space vehicle entity;

(ii) Name of contact person, phone number, fax number and e-mail address;

(iii) Quantity (in kilograms) of HCFC–141b needed for the control period;

(iv) Description of markets and applications being served by the use of HCFC–141b;

(v) A technical description of the process in which HCFC–141b is still being used;

(vi) A technical description of the specific conditions under which the product is still being applied;

(vii) Technical description of why alternatives and substitutes are still not sufficient to eliminate the use of HCFC–141b;

(viii) Amount of stockpiled HCFC–141b (on-hand, taken title to, or available from a supplier) along with a detailed analysis showing why stockpiled, recovered or recycled quantities are deemed to be technically or economically infeasible for use; and

(ix) A detailed description of continuing investigations into and progress on possible alternatives and substitutes and how this activity differs from information given in the previous request.

(5) A person granted HCFC–141b exemption allowances by the Director of EPA's Office of Atmospheric Programs under paragraph (h)(2)(i) or (h)(3) of this section may request a quantity of HCFC–141b be produced or imported in the specified control period listed in the notice by conferring the rights to produce or import to a producer or importer.

(6) The HCFC–141b exemption allowances held by one entity do not automatically transfer to an acquiring

entity. Any entity acquiring another company holding HCFC–141b exemption allowances must submit a renewal application in accordance with paragraph (h)(4) of this section at the time of the acquisition in order to qualify for the HCFC–141b exemption allowances.

§ 82.17 Apportionment of baseline production allowances for class II controlled substances.

Effective January 1, 2003, the following persons are apportioned baseline production allowances for HCFC–141b, HCFC–22, or HCFC–142b as set forth in the following table:

Person	Controlled substance	Allowances(kg.)
AlliedSignal (Honeywell)	HCFC–22	37,378,252
	HCFC–141b	28,705,200
	HCFC–142b	2,417,534
Ausimont USA	HCFC–142b	6,541,764
DuPont Company	HCFC–22	42,638,049
Elf Atochem (ATOFINA)	HCFC–22	28,219,223
	HCFC–141b	24,647,925
	HCFC–142b	16,131,096
LaRoche Industries	HCFC–141b	17,756,508
MDA Manufacturing	HCFC–22	2,383,835

§ 82.18 Availability of production in addition to baseline production allowances for class II controlled substances.

(a) *Article 5 allowances.* (1) Effective January 1, 2003, a person apportioned baseline production allowances under § 82.17 is also apportioned Article 5 allowances, equal to 15 percent of their baseline production allowances for the specified HCFC for each control period up until December 31, 2014, to be used for the production of the specified HCFC for export only to foreign states listed in Appendix E to this subpart.

(2) Effective January 1, 2015, for all HCFCs, a person apportioned baseline production allowances under § 82.17 is also apportioned Article 5 allowances, equal to 10 percent of their baseline production allowances for the specified HCFC for each control period up until December 31, 2029, to be used for the production of the specified HCFC for export only to foreign states listed in Appendix E to this subpart.

(3) Effective January 1, 2030, for all HCFCs, a person apportioned baseline production allowances under § 82.17 is also apportioned Article 5 allowances, equal to 15 percent of their baseline production allowances for the specified HCFC for each control period up until December 31, 2039, to be used for the production of the specified HCFC for export only to foreign states listed in Appendix E to this subpart.

(b) *Export production allowances.* (1) Effective January 1, 2003, a person apportioned baseline production allowances for HCFC–141b under § 82.17 is also apportioned export production allowances equal to 100 percent of their baseline production allowances for HCFC–141b for each control period up until December 31, 2029, to be used for the production of HCFC–141b for export only, in accordance with this section.

(2) [Reserved]

(c) *International trades of production allowances, export production allowances and Article 5 allowances.* (1) A person may increase or decrease its production allowances, export production allowances, or Article 5 allowances, for a specified control period through trades with another Party to the Protocol as set forth in this paragraph (c). Effective January 1, 2004, a nation listed either: in Appendix L of this subpart that is also listed in Appendix C, Annex 1 of the Protocol as having ratified the Beijing Amendments, or in Appendix C, Annex 1 of the Protocol as having ratified the Copenhagen Amendments but not listed in Appendix L of this subpart, or in Appendix C, Annex 2 of the Protocol, as being a foreign state complying with the Beijing Amendments if the foreign state is listed in Appendix L of this subpart, or as being a foreign state complying with the Copenhagen Amendments if the foreign state is not listed in Appendix L of this subpart must agree either to trade to the person for the current control period some quantity of production that the nation is permitted under the Montreal Protocol or to receive from the person for the current control period some quantity of production that the person is permitted under this subpart. The person must expend its consumption allowances allocated under § 82.19, or obtained under § 82.20 in order to produce with the additional production allowances.

(2) *Trade from a Party—Information requirements.* (i) A person requesting a trade from a Party must submit to the Administrator a signed document from the principal diplomatic representative in that nation's embassy in the U.S. stating that the appropriate authority within that nation will establish or revise production limits for the nation to equal the lowest of the following three production quantities:

(A) The maximum production that the nation is allowed under the Protocol minus the quantity (in kilograms) to be traded;

(B) The maximum production that is allowed under the nation's applicable domestic law minus the quantity (in kilograms) to be traded; or

(C) The average of the nation's actual national production level for the three years prior to the trade minus the production to be traded.

(ii) A person requesting a trade from a Party must also submit to the Administrator a true copy of the document that sets forth the following:

(A) The identity and address of the person;

(B) The identity of the Party;

(C) The names and telephone numbers of contact persons for the person and for the Party;

(D) The chemical type and quantity (in kilograms) of production being traded;

(E) Documentation that the Party possesses the necessary quantity of unexpended production rights;

(F) The control period(s) to which the trade applies; and

(G) For increased production intended for export to the Party from whom the allowances would be received, a signed statement of intent to export to the Party.

(3) *Trade to a Party—Information requirements.* A person requesting a trade to a Party must submit a request that sets forth the following information to the Administrator:

(i) The identity and address of the person;

(ii) The identity of the Party;

(iii) The names and telephone numbers of contact persons for the person and for the Party;

(iv) The chemical type and quantity (in kilograms) of allowable production being traded; and

(v) The control period(s) to which the trade applies.

(4) *Review of international trade request to a Party.* After receiving a trade request that meets the requirements of paragraph (c)(3) of this section, the Administrator may, at his/her discretion, consider the following factors by seeking concurrence from the Department of Commerce, the United States Trade Representative, and the Department of State, where appropriate, in deciding whether to approve such a trade:

(i) Possible creation of domestic economic hardship;

(ii) Possible effects on trade;

(iii) Potential environmental implications; and

(iv) The total quantity of unexpended production allowances held by U.S. entities.

(5) *Notice of trade.* If the request meets the requirement of paragraph (c)(2) of this section for trades from Parties and paragraphs (c)(3) and (4) of this section for trades to Parties, the Administrator will issue the person a notice. The notice will either grant or deduct production allowances or export production allowances or Article 5 allowances and specify the control period to which the trade applies. The Administrator may disapprove the trade request contingent on the consideration of factors listed in paragraph (c)(4) of this section for trades to Parties.

(i) For trades from a Party, the Administrator will issue a notice revising the allowances held by the recipient of the trade to equal the unexpended production allowances, unexpended export production allowances, or unexpended Article 5 allowances held by the recipient of the trade under this subpart plus the quantity of allowable production traded from the Party.

(ii) For trades to a Party, the Administrator will issue a notice revising the production limit for the trader to equal the lesser of:

(A) The unexpended production allowances, unexpended export production allowances or unexpended Article 5 allowances held by the trade or minus the quantity traded; or

(B) The unexpended production allowances held by the trader minus the amount by which the U.S. average annual production of the class II controlled substance being traded for the three years prior to the trade is less than the total allowable production of that class II controlled substance under this subpart minus the amount traded; or

(C) The total U.S. allowable production of the class II controlled substance being traded minus the three-year average of the actual annual U.S. production of the class II controlled substance prior to the control period of the trade.

(6) Revised notices of production limits for subsequent traders. If after one person obtains approval of a trade of allowable production of a class II controlled substance to a Party and other persons obtain approval for trades of the same class II controlled substance during the same control period, the Administrator will issue revised notices. The notices will revise the production limits for each of the other persons trading to equal the lesser of:

(i) The unexpended production allowances, unexpended export production allowances or unexpended Article 5 allowances held by the trader under this subpart minus the quantity traded; or

(ii) The result of the following set of calculations:

(A) The total U.S. allowable production of the class II controlled substance minus the three-year average of the actual annual U.S. production of the class II controlled substance prior to the control period of the trade;

(B) The quantity traded divided by the total quantity traded by all the other persons trading the same class II controlled substance in the same control period;

(C) The result of paragraph (c)(6)(ii)(A) of this section multiplied by the result of paragraph (c)(6)(ii)(B) of this section;

(D) The quantity derived in paragraph (c)(6)(i) of this section, minus the result of paragraph (c)(6)(ii)(C) of this section;

(7) Production limit for previous traders. The Administrator will also issue a notice revising the production limit for each trader who previously obtained approval of a trade of the class II controlled substance to a Party in the same control period to equal the result of the following set of calculations:

(i) The total U.S. allowable production of the class II controlled substance minus the three-year average of the actual annual U.S. production of the class II controlled substance prior to the control period of the trade;

(ii) The quantity traded by the person divided by the quantity traded by all the persons who have traded that class II controlled substance in that control period;

(iii) The result of paragraph (c)(7)(i) of this section multiplied by the result of paragraph (c)(7)(ii) of this section.

(iv) The unexpended production allowances, unexpended export production allowances or unexpended Article 5 allowances held by the person plus the result of paragraph (c)(7)(iii) of this section;

(8) Effective date of revised production limits. The change in production allowances, export production allowances or Article 5 allowances will be effective on the date that the notice is issued.

§ 82.19 Apportionment of baseline consumption allowances for class II controlled substances.

(a) Effective January 1, 2003, the following persons are apportioned baseline consumption allowances for HCFC–141b, HCFC–22, or HCFC–142b as set forth in the following table:

Person	Controlled substance	Allowances (kg)
ABCO Refrigeration Supply	HCFC–22	279,366
Air Systems	HCFC–22	13,514
Allied (Honeywell)	HCFC–22	35,392,492
	HCFC–141b	20,749,489
	HCFC–142b	1,315,819
Altair Industries	HCFC–22	279,935
Ausimont USA	HCFC–22	99,643
	HCFC–142b	3,047,386
Automatic Equipment Sales of VA	HCFC–22	54,088
Condor Products	HCFC–22	666,171
Continental	HCFC–141b	20,315

Person	Controlled substance	Allowances (kg)
Discount Refrigerants	HCFC–22	375,328
	HCFC–141b	994
DuPont Company	HCFC–22	38,814,862
	HCFC–141b	9,049
	HCFC–142b	52,797
Elf Atochem (ATOFINA)	HCFC–22	29,524,481
	HCFC–141b	25,405,570
	HCFC–142b	16,672,675
Full Circle	HCFC–22	14,865
HG Refrigeration Supply	HCFC–22	40,068
ICC Chemical Corp.	HCFC–141b	81,225
ICI Americas (INEOS)	HCFC–22	2,546,305
Kivlan & Co. (Dynatemp)	HCFC–22	2,028,980
Klomar Ship Supply	HCFC–22	8,585
LaRoche Industries	HCFC–141b	16,097,869
MDA Manufacturing	HCFC–22	2,541,545
Mondy-Global	HCFC–22	281,824
National Refrigerants	HCFC–22	5,480,315
Refricenter of Miami	HCFC–22	381,293
Refricentro	HCFC–22	45,979
Rhone-Poulenc	HCFC–22	52,090
R-Lines	HCFC–22	63,172
Saez	HCFC–22	37,936
Solvay Fluorides	HCFC–22	313,966
	HCFC–141b	3,940,115
TESCO Distributors	HCFC–22	48,049
Tulstar Products	HCFC–141b	89,913

§ 82.20 Availability of consumption allowances in addition to baseline consumption allowances for class II controlled substances.

(a) A person may obtain at any time during the control period, in accordance with the provisions of this section, consumption allowances equivalent to the quantity of class II controlled substances that the person exported from the U.S. and its territories to a foreign state, in accordance with this section, when that quantity of class II controlled substance was produced in the U.S. with expended consumption allowances.

(1) The exporter must submit to the Administrator a request for consumption allowances setting forth the following:

(i) The identities and addresses of the exporter and the recipient of the exports;

(ii) The exporter's Employer Identification Number;

(iii) The names and telephone numbers of contact persons for the exporter and the recipient;

(iv) The quantity (in kilograms) and type of class II controlled substances reported;

(v) The source of the class II controlled substances and the date purchased;

(vi) The date on which, and the port from which, the class II controlled substances were exported from the U.S. or its territories;

(vii) The country to which the class II controlled substances were exported;

(viii) A copy of the bill of lading and the invoice indicating the net quantity (in kilograms) of class II controlled substances shipped and documenting the sale of the class II controlled substances to the purchaser;

(ix) The commodity codes of the class II controlled substances reported; and

(x) A written statement from the producer that the class II controlled substances were produced with expended allowances.

(2) The Administrator will review the information and documentation submitted under paragraph (a)(1) of this section and will issue a notice.

(i) The Administrator will determine the quantity of class II controlled substances that the documentation verifies was exported and issue consumption allowances equivalent to the quantity of class II controlled substances that were exported.

(A) The grant of the consumption allowances will be effective on the date the notice is issued.

(B) The consumption allowances will be granted to the person the exporter indicates, whether it is the producer or the exporter.

(ii) The Administrator will issue a notice that the consumption allowances are not granted if the Administrator determines that the information and documentation do not satisfactorily substantiate the exporter's claims.

(b) *International trades of consumption allowances.* (1) A person may increase its consumption allowances for a specified control period through trades with another Party to the Protocol as set forth in this paragraph (b). A person may only receive consumption from Poland or Norway, or both, and only if the nation agrees to trade to the person for the current control period some quantity of consumption that the nation is permitted under the Montreal Protocol.

(2) Trade from a Party—Information requirements. A person must submit the following information to the Administrator:

(i) A signed document from the principal diplomatic representative in the Polish or Norwegian embassy in the U.S. stating that the appropriate authority within that nation will establish or revise consumption limits for the nation to equal the lowest of the following three consumption quantities:

(A) The maximum consumption that the nation is allowed under the Protocol minus the quantity (in kilograms) traded;

(B) The maximum consumption that is allowed under the nation's applicable domestic law minus the quantity (in kilograms) traded; or

(C) The average of the nation's actual consumption level for the three years prior to the trade minus the consumption traded.

(ii) A person requesting a consumption trade from Poland or Norway must also submit to the Administrator a true copy of the document that sets forth the following:

(A) The identity and address of the person;

(B) The identity of the Party;

(C) The names and telephone numbers of contact persons for the person and for the Party;

(D) The chemical type and quantity (in kilograms) of consumption being traded;

(E) Documentation that the Party possesses the necessary quantity of unexpended consumption rights;

(F) The control period(s) to which the trade applies; and

(3) *Notice of trade.* If the request meets the requirement of paragraph (b)(2) of this section for trades from Parties, the Administrator will issue the person a notice. The notice will grant consumption allowances and specify the control period to which the trade applies. The Administrator may disapprove the trade request if it does not meet the requirements of paragraph (b)(2) of this section.

(4) *Trade from a Party.* The Administrator will issue a notice revising the allowances held by the recipient of the trade to equal the unexpended consumption allowances held by the recipient of the trade under this subpart plus the quantity of allowable consumption traded from the Party.

(5) *Effective date of revised consumption limits.* The change in consumption allowances will be effective on the date that the notice is issued.

§ 82.21 [Reserved].

§ 82.22 [Reserved].

§ 82.23 Transfers of allowances of class II controlled substances.

(a) *Inter-company transfers.* Effective January 1, 2003, a person (''transferor'') may transfer to any other person (''transferee'') any quantity of the transferor's class II consumption allowances, production allowances, export production allowances, or Article 5 allowances for the same type of allowance as follows:

(i) The transferor must submit to the Administrator a transfer claim setting forth the following:

(A) The identities and addresses of the transferor and the transferee;

(B) The name and telephone numbers of contact persons for the transferor and the transferee;

(C) The type of allowances being transferred, including the names of the class II controlled substances for which allowances are to be transferred;

(D) The quantity (in kilograms) of allowances being transferred;

(E) The control period(s) for which the allowances are being transferred;

(F) The quantity of unexpended allowances of the type and for the control period being transferred that the transferor holds under authority of this subpart on the date the claim is submitted to EPA; and

(G) For trades of consumption allowances, production allowances, export production allowances, or Article 5 allowances, the quantity of the 0.1 percent offset applied to the unweighted quantity traded that will be deducted from the transferor's allowance balance.

(ii) The Administrator will determine whether the records maintained by EPA indicate that the transferor possesses unexpended allowances sufficient to cover the transfer claim on the date the transfer claim is processed. The transfer claim is the quantity (in kilograms) to be transferred plus, in the case of transfers of production or consumption allowances, 0.1 percent of that quantity. The Administrator will take into account any previous transfers, any production, and allowable imports and exports of class II controlled substances reported by the transferor. Within three working days of receiving a complete transfer claim, the Administrator will take action to notify the transferor and transferee as follows:

(A) The Administrator will issue a notice indicating that EPA does not object to the transfer if EPA's records show that the transferor has sufficient unexpended allowances to cover the transfer claim. In the case of transfers of production or consumption allowances, EPA will reduce the transferor's balance of unexpended allowances by the quantity to be transferred plus 0.1 percent of that quantity. In the case of transfers of export production or Article 5 allowances, EPA will reduce the transferor's balance of unexpended allowances, respectively, by the quantity to be transferred. The transferor and the transferee may proceed with the transfer when EPA issues a no objection notice. However, if EPA ultimately finds that the transferor did not have sufficient unexpended allowances to cover the claim, the transferor and transferee, where applicable, will be held liable for any knowing violations of the regulations of this subpart that occur as a result of, or in conjunction with, the improper transfer.

(B) The Administrator will issue a notice disallowing the transfer if EPA's records show that the transferor has insufficient unexpended allowances to cover the transfer claim, or that the transferor has failed to respond to one or more Agency requests to supply information needed to make a determination. Either party may file a notice of appeal, with supporting reasons, with the Administrator within 10 working days after receipt of notification. The Administrator may affirm or vacate the disallowance. If no appeal is taken by the tenth working day after notification, the disallowance shall be final on that day.

(iii) The transferor and transferee may proceed with the transfer if the Administrator does not respond to a transfer claim within the three working days specified in paragraph (a)(1)(ii) of this section. In the case of transfers of production or consumption allowances, EPA will reduce the transferor's balance of unexpended allowances by the quantity to be transferred plus 0.1 percent of that quantity. In the case of transfers of export production allowances or Article 5 allowances, EPA will reduce the transferor's balance of unexpended allowances by the quantity to be transferred plus 0.1 percent of that quantity. If EPA ultimately finds that the transferor did not have sufficient unexpended allowances to cover the claim, the transferor and/or the transferee, where applicable, will be held liable for any knowing violations of the regulations of this subpart that occur as a result of, or in conjunction with, the improper transfer.

(b) *Inter-pollutant transfers.* (1) Effective January 1, 2003, a person (transferor) may convert consumption allowances or production allowances for one class II controlled substance to the same type of allowance for another class II controlled substance listed in Appendix B of this subpart, following the procedures described in paragraph (b)(3) of this section.

(2) Inter-pollutant transfers will be permitted at any time during the control period and during the 30 days after the end of a control period.

(3) The transferor must submit to the Administrator a transfer claim that includes the following:

(i) The identity and address of the transferor;

(ii) The name and telephone number of a contact person for the transferor;

(iii) The type of allowances being converted, including the names of the class II controlled substances for which allowances are to be converted;

(iv) The quantity (in kilograms) and type of allowances to be converted;

(v) The quantity (in kilograms) of allowances to be subtracted from the transferor's unexpended allowances for the first class II controlled substance, to be equal to 100.1 percent of the quantity of allowances converted;

(vi) The quantity (in kilograms) of allowances to be added to the transferee's unexpended allowances for the second class II controlled substance,

to be equal to the quantity (in kilograms) of allowances for the first class II controlled substance being converted multiplied by the quotient of the ozone depletion potential of the first class II controlled substance divided by the ozone depletion potential of the second class II controlled substance, as listed in Appendix B to this subpart;

(vii) The control period(s) for which the allowances are being converted; and

(viii) The quantity (in kilograms) of unexpended allowances of the type and for the control period being converted that the transferor holds under authority of this subpart as of the date the claim is submitted to EPA.

(4) The Administrator will determine whether the records maintained by EPA indicate that the convertor possesses unexpended allowances sufficient to cover the transfer claim on the date the transfer claim is processed (*i.e.*, the quantity (in kilograms) to be converted plus 0.1 percent of that quantity (in kilograms)). EPA will take into account any previous transfers, and any production, imports (not including transshipments or used class II controlled substances), or exports (not including transhipments or used class II controlled substances) of class II controlled substances reported by the convertor. Within three working days of receiving a complete transfer claim, the Administrator will take action to notify the convertor as follows:

(i) The Administrator will issue a notice indicating that EPA does not object to the transfer if EPA's records show that the convertor has sufficient unexpended allowances to cover the transfer claim. EPA will reduce the transferor's balance of unexpended allowances by the quantity to be converted plus 0.1 percent of that quantity (in kilograms). When EPA issues a no objection notice, the transferor may proceed with the transfer. However, if EPA ultimately finds that the transferor did not have sufficient unexpended allowances to cover the claim, the transferor will be held liable for any violations of the regulations of this subpart that occur as a result of, or in conjunction with, the improper transfer.

(ii) The Administrator will issue a notice disallowing the transfer if EPA's records show that the transferor has insufficient unexpended allowances to cover the transfer claim, or that the transferor has failed to respond to one or more Agency requests to supply information needed to make a determination. The transferor may file a notice of appeal, with supporting reasons, with the Administrator within 10 working days after receipt of notification. The Administrator may affirm or vacate the disallowance. If no appeal is taken by the tenth working day after notification, the disallowance shall be final on that day.

(iii) The transferor may proceed with the transfer if the Administrator does not respond to a transfer claim within the three working days specified in paragraph (b)(4) of this section. EPA will reduce the transferor's balance of unexpended allowances by the quantity (in kilograms) to be converted plus 0.1 percent of that quantity (in kilograms). The transferor will be held liable for any violations of the regulations of this subpart that occur as a result of, or in conjunction with, the improper transfer if EPA ultimately finds that the transferor did not have sufficient unexpended allowances or credits to cover the claim.

(c) *Inter-company transfers and Inter-pollutant transfers.* If a person requests an inter-company transfer and an inter-pollutant transfer simultaneously, the quantity (in kilograms) subtracted from the transferor's unexpended production or consumption allowances for the first class II controlled substance will be equal to 100.1 percent of the quantity (in kilograms) of allowances that are being converted and transferred.

(d) A person receiving a permanent transfer of baseline production allowances or baseline consumption allowances (the transferee) for a specific class II controlled substance will be the person who has their baseline allowances adjusted in accordance with phaseout schedules in this section.

§ 82.24 Recordkeeping and reporting requirements for class II controlled substances.

(a) *Recordkeeping and reporting.* Any person who produces, imports, exports, transforms, or destroys class II controlled substances must comply with the following recordkeeping and reporting requirements:

(1) Reports required by this section must be mailed to the Administrator within 30 days of the end of the applicable reporting period, unless otherwise specified.

(2) Revisions of reports that are required by this section must be mailed to the Administrator within 180 days of the end of the applicable reporting period, unless otherwise specified.

(3) Records and copies of reports required by this section must be retained for three years.

(4) Quantities of class II controlled substances must be stated in terms of kilograms in reports required by this section.

(5) Reports and records required by this section may be used for purposes of compliance determinations. These requirements are not intended as a limitation on the use of other evidence admissible under the Federal Rules of Evidence. Failure to provide the reports, petitions and records required by this section and to certify the accuracy of the information in the reports, petitions and records required by this section, will be considered a violation of this subpart. False statements made in reports, petitions and records will be considered violations of Section 113 of the Clean Air Act and under 18 U.S.C. 1001.

(b) *Producers.* Persons (''producers'') who produce class II controlled substances during a control period must comply with the following recordkeeping and reporting requirements:

(1) *Reporting—Producers.* For each quarter, each producer of a class II controlled substance must provide the Administrator with a report containing the following information:

(i) The quantity (in kilograms) of production of each class II controlled substance used in processes resulting in their transformation by the producer and the quantity (in kilograms) intended for transformation by a second party;

(ii) The quantity (in kilograms) of production of each class II controlled substance used in processes resulting in their destruction by the producer and the quantity (in kilograms) intended for destruction by a second party;

(iii) The expended allowances for each class II controlled substance;

(iv) The producer's total of expended and unexpended production allowances, consumption allowances, export production allowances, and Article 5 allowances at the end of that quarter;

(v) The quantity (in kilograms) of class II controlled substances sold or transferred during the quarter to a person other than the producer for use in processes resulting in their transformation or eventual destruction;

(vi) A list of the quantities and names of class II controlled substances, exported by the producer to a Party to the Protocol, that will be transformed or destroyed and therefore were not produced expending production or consumption allowances;

(vii) For transformation in the U.S. or by a person of another Party, one copy of a transformation verification from the transformer for a specific class II controlled substance and a list of additional quantities shipped to that same transformer for the quarter;

(viii) For destruction in the U.S. or by a person of another Party, one copy of

a destruction verification as required in paragraph (e) of this section for a particular destroyer, destroying the same class II controlled substance, and a list of additional quantities shipped to that same destroyer for the quarter;

(ix) In cases where the producer produced class II controlled substances using export production allowances, a list of U.S. entities that purchased those class II controlled substances and exported them to a Party to the Protocol;

(x) In cases where the producer produced class II controlled substances using Article 5 allowances, a list of U.S. entities that purchased those class II controlled substances and exported them to Article 5 countries; and

(xi) A list of the HCFC 141b-exemption allowance holders from whom orders were received and the quantity (in kilograms) of HCFC–141b requested and produced.

(2) *Recordkeeping—Producers.* Every producer of a class II controlled substance during a control period must maintain the following records:

(i) Dated records of the quantity (in kilograms) of each class II controlled substance produced at each facility;

(ii) Dated records of the quantity (in kilograms) of class II controlled substances produced for use in processes that result in their transformation or for use in processes that result in their destruction;

(iii) Dated records of the quantity (in kilograms) of class II controlled substances sold for use in processes that result in their transformation or for use in processes that result in their destruction;

(iv) Dated records of the quantity (in kilograms) of class II controlled substances produced with export production allowances or Article 5 allowances;

(v) Copies of invoices or receipts documenting sale of class II controlled substances for use in processes that result in their transformation or for use in processes that result in their destruction;

(vi) Dated records of the quantity (in kilograms) of each class II controlled substance used at each facility as feedstocks or destroyed in the manufacture of a class II controlled substance or in the manufacture of any other substance, and any class II controlled substance introduced into the production process of the same class II controlled substance at each facility;

(vii) Dated records of the quantity (in kilograms) of raw materials and feedstock chemicals used at each facility for the production of class II controlled substances;

(viii) Dated records of the shipments of each class II controlled substance produced at each plant;

(ix) The quantity (in kilograms) of class II controlled substances, the date received, and names and addresses of the source of used materials containing class II controlled substances which are recycled or reclaimed at each plant;

(x) Records of the date, the class II controlled substance, and the estimated quantity of any spill or release of a class II controlled substance that equals or exceeds 100 pounds;

(xi) Transformation verification in the case of transformation, or the destruction verification in the case of destruction as required in paragraph (e) of this section showing that the purchaser or recipient of a class II controlled substance, in the U.S. or in another country that is a Party, certifies the intent to either transform or destroy the class II controlled substance, or sell the class II controlled substance for transformation or destruction in cases when allowances were not expended;

(xii) Written verifications from a U.S. purchaser that the class II controlled substance was exported to a Party in accordance with the requirements in this section, in cases where export production allowances were expended to produce the class II controlled substance;

(xiii) Written verifications from a U.S. purchaser that the class II controlled substance was exported to an Article 5 country in cases where Article 5 allowances were expended to produce the class II controlled substance;

(xiv) Written verifications from a U.S. purchaser that HCFC–141b was manufactured for the express purpose of meeting HCFC–141b exemption needs in accordance with information submitted under § 82.16(h), in cases where HCFC–141b exemption allowances were expended to produce the HCFC–141b.

(3) For any person who fails to maintain the records required by this paragraph, or to submit the report required by this paragraph, the Administrator may assume that the person has produced at full capacity during the period for which records were not kept, for purposes of determining whether the person has violated the prohibitions at § 82.15.

(c) *Importers.* Persons (''importers'') who import class II controlled substances during a control period must comply with the following recordkeeping and reporting requirements:

(1) *Reporting—Importers.* For each quarter, an importer of a class II controlled substance (including importers of used class II controlled substances) must submit to the Administrator a report containing the following information:

(i) Summaries of the records required in paragraphs (c)(2)(i) through (xvi) of this section for the previous quarter;

(ii) The total quantity (in kilograms) imported of each class II controlled substance for that quarter;

(iii) The commodity code for the class II controlled substances imported, which must be one of those listed in Appendix K to this subpart;

(iv) The quantity (in kilograms) of those class II controlled substances imported that are used class II controlled substances;

(v) The quantity (in kilograms) of class II controlled substances imported for that quarter and totaled by chemical for the control period to date;

(vi) The importer's total sum of expended and unexpended consumption allowances by chemical as of the end of that quarter;

(vii) The quantity (in kilograms) of class II controlled substances imported for use in processes resulting in their transformation or destruction;

(viii) The quantity (in kilograms) of class II controlled substances sold or transferred during that quarter to each person for use in processes resulting in their transformation or eventual destruction; and

(ix) Transformation verifications showing that the purchaser or recipient of imported class II controlled substances intends to transform those substances or destruction verifications showing that the purchaser or recipient intends to destroy the class II controlled substances (as provided in paragraph (e) of this section).

(xi) A list of the HCFC 141b-exemption allowance holders from whom orders were received and the quantity (in kilograms) of HCFC–141b requested and imported.

(2) *Recordkeeping—Importers.* An importer of a class II controlled substance (including used class II controlled substances) must maintain the following records:

(i) The quantity (in kilograms) of each class II controlled substance imported, either alone or in mixtures, including the percentage of each mixture which consists of a class II controlled substance;

(ii) The quantity (in kilograms) of those class II controlled substances imported that are used and the information provided with the petition as required under paragraph (c)(3) of this section;

(iii) The quantity (in kilograms) of class II controlled substances other than

transhipments or used substances imported for use in processes resulting in their transformation or destruction;

(iv) The quantity (in kilograms) of class II controlled substances other than transhipments or used substances imported and sold for use in processes that result in their destruction or transformation;

(v) The date on which the class II controlled substances were imported;

(vi) The port of entry through which the class II controlled substances passed;

(vii) The country from which the imported class II controlled substances were imported;

(viii) The commodity code for the class II controlled substances shipped, which must be one of those listed in Appendix K to this subpart;

(ix) The importer number for the shipment;

(x) A copy of the bill of lading for the import;

(xi) The invoice for the import;

(xii) The quantity (in kilograms) of imports of used class II controlled substances;

(xiii) The U.S. Customs entry form;

(xiv) Dated records documenting the sale or transfer of class II controlled substances for use in processes resulting in their transformation or destruction;

(xv) Copies of transformation verifications or destruction verifications indicating that the class II controlled substances will be transformed or destroyed (as provided in paragraph (e) of this section).

(xvi) Written verifications from a U.S. purchaser that HCFC–141b was imported for the express purpose of meeting HCFC–141b exemption needs in accordance with information submitted under § 82.16(h), and that the quantity will not be resold, in cases where HCFC–141b exemption allowances were expended to import the HCFC–141b.

(3) *Petition to import used class II controlled substances and transhipments—Importers.* For each individual shipment over 5 pounds of a used class II controlled substance as defined in § 82.3, an importer must submit directly to the Administrator, at least 40 working days before the shipment is to leave the foreign port of export, the following information in a petition:

(i) The name and quantity (in kilograms) of the used class II controlled substance to be imported;

(ii) The name and address of the importer, the importer ID number, the contact person, and the phone and fax numbers;

(iii) Name, address, contact person, phone number and fax number of all previous source facilities from which the used class II controlled substance was recovered;

(iv) A detailed description of the previous use of the class II controlled substance at each source facility and a best estimate of when the specific controlled substance was put into the equipment at each source facility, and, when possible, documents indicating the date the material was put into the equipment;

(v) A list of the name, make and model number of the equipment from which the material was recovered at each source facility;

(vi) Name, address, contact person, phone number and fax number of the exporter and of all persons to whom the material was transferred or sold after it was recovered from the source facility;

(vii) The U.S. port of entry for the import, the expected date of shipment and the vessel transporting the chemical. If at the time of submitting a petition the importer does not know the U.S. port of entry, the expected date of shipment and the vessel transporting the chemical, and the importer receives a non-objection notice for the individual shipment in the petition, the importer is required to notify the Administrator of this information prior to the actual U.S. Customs entry of the individual shipment;

(viii) A description of the intended use of the used class II controlled substance, and, when possible, the name, address, contact person, phone number and fax number of the ultimate purchaser in the United States;

(ix) The name, address, contact person, phone number and fax number of the U.S. reclamation facility, where applicable;

(x) If someone at the source facility recovered the class II controlled substance from the equipment, the name and phone and fax numbers of that person;

(xi) If the imported class II controlled substance was reclaimed in a foreign Party, the name, address, contact person, phone number and fax number of any or all foreign reclamation facility(ies) responsible for reclaiming the cited shipment;

(xii) An export license from the appropriate government agency in the country of export and, if recovered in another country, the export license from the appropriate government agency in that country;

(xiii) If the imported used class II controlled substance is intended to be sold as a refrigerant in the U.S., the name and address of the U.S. reclaimer who will bring the material to the standard required under subpart F of this part, if not already reclaimed to those specifications; and

(xiv) A certification of accuracy of the information submitted in the petition.

(4) *Review of petition to import used class II controlled substances and transhipments—Importers.* Starting on the first working day following receipt by the Administrator of a petition to import a used class II controlled substance, the Administrator will initiate a review of the information submitted under paragraph(c)(3) of this section and take action within 40 working days to issue either an objection-notice or a non-objection notice for the individual shipment to the person who submitted the petition to import the used class II controlled substance.

(i) The Administrator may issue an objection notice to a petition for the following reasons:

(A) If the Administrator determines that the information is insufficient, that is, if the petition lacks or appears to lack any of the information required under paragraph (c)(3) of this section;

(B) If the Administrator determines that any portion of the petition contains false or misleading information, or the Administrator has information from other U.S. or foreign government agencies indicating that the petition contains false or misleading information;

(C) If the transaction appears to be contrary to provisions of the Vienna Convention on Substances that Deplete the Ozone Layer, the Montreal Protocol and Decisions by the Parties, or the non-compliance procedures outlined and instituted by the Implementation Committee of the Montreal Protocol;

(D) If the appropriate government agency in the exporting country has not agreed to issue an export license for the cited individual shipment of used class II controlled substance;

(E) If reclamation capacity is installed or is being installed for that specific class II controlled substance in the country of recovery or country of export and the capacity is funded in full or in part through the Multilateral Fund.

(ii) Within ten (10) working days after receipt of the objection notice, the importer may re-petition the Administrator, only if the Administrator indicated ''insufficient information'' as the basis for the objection notice. If no appeal is taken by the tenth working day after the date on the objection notice, the objection shall become final. Only one re-petition will be accepted for any original petition received by EPA.

(iii) Any information contained in the re-petition which is inconsistent with the original petition must be identified

and a description of the reason for the inconsistency must accompany the repetition.

(iv) In cases where the Administrator does not object to the petition based on the criteria listed in paragraph (c)(4)(i) of this section, the Administrator will issue a non-objection notice.

(v) To pass the approved used class II controlled substances through U.S. Customs, the petition and the non-objection notice issued by EPA must accompany the shipment through U.S. Customs.

(vi) If for some reason, following EPA's issuance of a non-objection notice, new information is brought to EPA's attention which shows that the non-objection notice was issued based on false information, then EPA has the right to:

(A) Revoke the non-objection notice;

(B) Pursue all means to ensure that the class II controlled substance is not imported into the U.S.; and

(C) Take appropriate enforcement actions.

(vii) Once the Administrator issues a non-objection notice, the person receiving the non-objection notice is permitted to import the individual shipment of used class II controlled substance only within the same control period as the date stamped on the non-objection notice.

(viii) A person receiving a non-objection notice from the Administrator for a petition to import used class II controlled substances must maintain the following records:

(A) A copy of the petition;

(B) The EPA non-objection notice;

(C) The bill of lading for the import; and

(D) U.S. Customs entry documents for the import that must include one of the commodity codes from Appendix K to this subpart.

(5) Recordkeeping for transhipments—Importers. Any person who tranships a class II controlled substance must maintain records that indicate:

(i) That the class II controlled substance shipment originated in a foreign country;

(ii) That the class II controlled substance shipment is destined for another foreign country; and

(iii) That the class II controlled substance shipment will not enter interstate commerce within the U.S.

(d) *Exporters.* Persons (''exporters'') who export class II controlled substances during a control period must comply with the following reporting requirements:

(1) *Reporting—Exporters.* For any exports of class II controlled substances not reported under § 82.20 (additional consumption allowances), or under paragraph (b)(2) of this section (reporting for producers of class II controlled substances), each exporter who exported a class II controlled substance must submit to the Administrator the following information within 30 days after the end of each quarter in which the unreported exports left the U.S.:

(i) The names and addresses of the exporter and the recipient of the exports;

(ii) The exporter's Employer Identification Number;

(iii) The type and quantity (in kilograms) of each class II controlled substance exported and what percentage, if any of the class II controlled substance is used;

(iv) The date on which, and the port from which, the class II controlled substances were exported from the U.S. or its territories;

(v) The country to which the class II controlled substances were exported;

(vi) The quantity (in kilograms) exported to each Article 5 country;

(vii) The commodity code for the class II controlled substances shipped, which must be one of those listed in Appendix K to this subpart;

(viii) For persons reporting transformation or destruction, the invoice or sales agreement containing language similar to the transformation verifications that the purchaser or recipient of imported class II controlled substances intends to transform those substances, or destruction verifications showing that the purchaser or recipient intends to destroy the class II controlled substances (as provided in paragraph (e) of this section).

(2) *Reporting export production allowances—Exporters.* In addition to the information required in paragraph (d)(1) of this section, any exporter using export production allowances must also provide the following to the Administrator:

(i) The Employer Identification Number on the Shipper's Export Declaration Form or Employer Identification Number of the shipping agent shown on the U.S. Customs Form 7525;

(ii) The exporting vessel on which the class II controlled substances were shipped; and

(iii) The quantity (in kilograms) exported to each Party.

(3) *Reporting Article 5 allowances—Exporters.* In addition to the information required in paragraph (d)(1) of this section, any exporter using Article 5 allowances must also provide the following to the Administrator:

(i) The Employer Identification Number on the Shipper's Export Declaration Form or Employer Identification Number of the shipping agent shown on the U.S. Customs Form 7525; and

(ii) The exporting vessel on which the class II controlled substances were shipped.

(4) *Reporting used class II controlled substances—Exporters.* Any exporter of used class II controlled substances must indicate on the bill of lading or invoice that the class II controlled substance is used, as defined in § 82.3.

(e) *Transformation and destruction.* Any person who transforms or destroys class II controlled substances must comply with the following recordkeeping and reporting requirements:

(1) *Recordkeeping—Transformation and destruction.* Any person who transforms or destroys class II controlled substances produced or imported by another person must maintain the following:

(i) Copies of the invoices or receipts documenting the sale or transfer of the class II controlled substances to the person;

(ii) Records identifying the producer or importer of the class II controlled substances received by the person;

(iii) Dated records of inventories of class II controlled substances at each plant on the first day of each quarter;

(iv) Dated records of the quantity (in kilograms) of each class II controlled substance transformed or destroyed;

(v) In the case where class II controlled substances were purchased or transferred for transformation purposes, a copy of the person's transformation verification as provided under paragraph (e)(3)of this section.

(vi) Dated records of the names, commercial use, and quantities (in kilograms) of the resulting chemical(s) when the class II controlled substances are transformed; and

(vii) Dated records of shipments to purchasers of the resulting chemical(s) when the class II controlled substances are transformed.

(viii) In the case where class II controlled substances were purchased or transferred for destruction purposes, a copy of the person's destruction verification, as provided under paragraph (e)(5) of this section.

(2) *Reporting—Transformation and destruction.* Any person who transforms or destroys class II controlled substances and who has submitted a transformation verification ((paragraph (e)(3) of this section) or a destruction verification (paragraph (e)(5) of this section) to the producer or importer of

the class II controlled substances, must report the following:

(i) The names and quantities (in kilograms) of the class II controlled substances transformed for each control period within 45 days of the end of such control period; and

(ii) The names and quantities (in kilograms) of the class II controlled substances destroyed for each control period within 45 days of the end of such control period.

(3) *Reporting—Transformation.* Any person who purchases class II controlled substances for purposes of transformation must provide the producer or importer with a transformation verification that the class II controlled substances are to be used in processes that result in their transformation.

(i) The transformation verification shall include the following:

(A) Identity and address of the person intending to transform the class II controlled substances;

(B) The quantity (in kilograms) of class II controlled substances intended for transformation;

(C) Identity of shipments by purchase order number(s), purchaser account number(s), by location(s), or other means of identification;

(D) Period of time over which the person intends to transform the class II controlled substances; and

(E) Signature of the verifying person.

(ii) [Reserved]

(4) *Reporting—Destruction.* Any person who destroys class II controlled substances shall provide EPA with a one-time report containing the following information:

(i) The destruction unit's destruction efficiency;

(ii) The methods used to record the volume destroyed;

(iii) The methods used to determine destruction efficiency;

(iv) The name of other relevant federal or state regulations that may apply to the destruction process;

(v) Any changes to the information in paragraphs (e)(4)(i), (ii), and (iii) of this section must be reflected in a revision to be submitted to EPA within 60 days of the change(s).

(5) *Reporting—Destruction.* Any person who purchases or receives and subsequently destroys class II controlled substances that were originally produced without expending allowances shall provide the producer or importer from whom it purchased or received the class II controlled substances with a verification that the class II controlled substances will be used in processes that result in their destruction.

(i) The destruction verification shall include the following:

(A) Identity and address of the person intending to destroy class II controlled substances;

(B) Indication of whether those class II controlled substances will be completely destroyed, as defined in § 82.3, or less than completely destroyed, in which case the destruction efficiency at which such substances will be destroyed must be included;

(C) Period of time over which the person intends to destroy class II controlled substances; and

(D) Signature of the verifying person.

(ii) [Reserved]

(f) *Heels—Recordkeeping and reporting.* Any person who brings into the U.S. a container with a heel, as defined in § 82.3, of class II controlled substances, must comply with the following requirements:

(1) Any person who brings a container with a heel must indicate on its bill of lading or invoice that the class II controlled substance in the container is a heel.

(2) Any person who brings a container with a heel must report quarterly the quantity (in kilograms) brought into the U.S. and certify:

(i) That the residual quantity (in kilograms) in each shipment is no more than 10 percent of the volume of the container;

(ii) That the residual quantity (in kilograms) in each shipment will either:

(A) Remain in the container and be included in a future shipment;

(B) Be recovered and transformed;

(C) Be recovered and destroyed; or

(D) Be recovered for a non-emissive use.

(3) Any person who brings a container with a heel into the U.S. must report on the final disposition of each shipment within 45 days of the end of the control period.

(g) *HCFC 141b exemption allowances—Reporting and recordkeeping.*

(1) Any person allocated HCFC–141b exemption allowances who confers a quantity of the HCFC–141b exemption allowances to a producer or import and places an order for the production or import of HCFC–141b with a verification that the HCFC–141b will only be used for the exempted purpose and not be resold must submit semi-annual reports, due 30 days after the end of the second and fourth respectively, to the Administrator containing the following information:

(i) Total quantity (in kilograms) HCFC–141b received during the 6 month period; and

(ii) The identity of the supplier of HCFC–141b on a shipment-by-shipment basis during the 6 month period.

(2) Any person allocated HCFC–141b exemption allowances must keep records of letters to producers and importers conferring unexpended HCFC–141b exemption allowances for the specified control period in the notice, orders for the production or import of HCFC–141b under those letters and written verifications that the HCFC–141b was produced or imported for the express purpose of meeting HCFC–141b exemption needs in accordance with information submitted under § 82.16(h), and that the quantity will not be resold.

13. Revise Appendix B to Subpart A to read as follows:

APPENDIX B TO PART 82 SUBPART A.—CLASS II CONTROLLED SUBSTANCES [a]

Controlled Substance	ODP
1. Dichlorofluoromethane (HCFC–21)	0.04
2. Monochlorodifluoromethane (HCFC–22)	0.055
3. Monochlorofluoromethane (HCFC–31)	0.02
4. Tetrachlorofluoroethane (HCFC–121)	0.01–0.04
5. Trichlorodifluoroethane (HCFC–122)	0.02–0.08
6. Dichlorotrifluoroethane (HCFC–123)	0.02
7. Monochlorotetrafluoroethane (HCFC–124)	0.022
8. Trichlorofluoroethane (HCFC–131)	0.007–0.05
9. Dichlorodifluoroethane (HCFC–132)	0.008–0.05
10. Monochlorotrifluoroethane (HCFC–133)	0.02–0.06
11. Dichlorofluoroethane (HCFC–141b)	0.11
12. Monochlorodifluoroethane (HCFC–142b)	0.065

APPENDIX B TO PART 82 SUBPART A.—CLASS II CONTROLLED SUBSTANCES [a]—Continued

Controlled Substance	ODP
13. Chlorofluoroethane (HCFC–151)	0.003–0.005
14. Hexachlorofluoropropane (HCFC–221)	0.015–0.07
15. Pentachlorodifluoropropane (HCFC–222)	0.01–0.09
16. Tetrachlorotrifluoropropane (HCFC–223)	0.01–0.08
17. Trichlorotetrafluoropropane (HCFC–224)	0.01–0.09
18. Dichloropentafluoropropane (HCFC–225ca)	0.025
19. Dichloropentafluoropropane (HCFC–225cb)	0.033
20. Monochlorohexafluoropropane (HCFC–226)	0.02–0.10
21. Pentachlorofluoropropane (HCFC–231)	0.05–0.09
22. Tetrachlorodifluoropropane (HCFC–232)	0.008–0.10
23. Trichlorotrifluoropropane (HCFC–233)	0.007–0.23
24. Dichlorotetrafluoropropane (HCFC–234)	0.01–0.28
25. Monochloropentafluoropropane (HCFC–235)	0.03–0.52
26. Tetrachlorofluoropropane (HCFC–241)	0.004–0.09
27. Trichlorodifluoropropane (HCFC–242)	0.005–0.13
28. Dichlorotrifluoropropane (HCFC–243)	0.007–0.12
29. Monochlorotetrafluoropropane (HCFC–244)	0.009–0.14
30. Trichlorofluoropropane (HCFC–251)	0.001–0.01
31. Dichlorodifluoropropane (HCFC–252)	0.005–0.04
32. Monochlorotrifluoropropane (HCFC–253)	0.003–0.03
33. Dichlorofluoropropane (HCFC–261)	0.002–0.02
34. Monochlorodifluoropropane (HCFC–262)	0.002–0.02
35. Monochlorofluoropropane (HCFC–271)	0.001–0.03

[a] According to Annex C of the Montreal Protocol, ''Where a range of ODPs is indicated, the highest value in that range shall be used for the purposes of the Protocol. The ODPs listed as a single value have been determined from calculations based on laboratory measurements. Those listed as a range are based on estimates and are less certain. The range pertains to an isomeric group. The upper value is the estimate of the ODP of the isomer with the highest ODP, and the lower value is the estimate of the ODP of the isomer with the lowest ODP.''

14. Appendix C to Subpart A is revised to read as follows:

APPENDIX C TO PART 82 SUBPART A.—PARTIES TO THE MONTREAL PROTOCOL (AS OF JUNE 14, 2002).

[Updated lists of Parties to the Protocol and the Amendments can be located at the website for UNEP's Ozone Secretariat. A check mark indicates ratification/accession/acceptance/approval of the agreement.]

Foreign state	Montreal protocol	London amendments	Copenhagen amendments	Montreal amendments	Beijing amendments
Albania	√				
Algeria	√	√	√		
Angola	√				
Antigua and Barbuda	√	√	√	√	
Argentina	√	√	√	√	
Armenia	√				
Australia	√	√	√	√	
Austria	√	√	√	√	
Azerbaijan	√	√	√	√	
Bahamas	√	√	√		
Bahrain	√	√	√	√	
Bangladesh	√	√	√	√	
Barbados	√	√	√		
Belarus	√	√			
Belgium	√	√	√		
Belize	√	√	√		
Benin	√	√	√		
Bolivia	√	√	√	√	
Bosnia & Herzegovina	√				
Botswana	√	√	√		
Brazil	√	√	√		
Brunei Darussalam	√				
Bulgaria	√	√	√	√	√
Burkina Faso	√	√	√		
Burundi	√	√	√	√	√
Cambodia	√				
Cameroon	√	√	√		
Canada	√	√	√	√	√
Cape Verde	√	√	√	√	
Central African Republic	√				
Chad	√	√	√	√	
Chile	√	√	√	√	√
China	√	√			
Colombia	√	√	√		
Comoros	√	√			

APPENDIX C TO PART 82 SUBPART A.—PARTIES TO THE MONTREAL PROTOCOL (AS OF JUNE 14, 2002).—Continued

[Updated lists of Parties to the Protocol and the Amendments can be located at the website for UNEP's Ozone Secretariat. A check mark indicates ratification/accession/acceptance/approval of the agreement.]

Foreign state	Montreal protocol	London amendments	Copenhagen amendments	Montreal amendments	Beijing amendments
Congo	√	√	√	√	√
Congo, Democratic Republic of	√	√	√		
Costa Rica	√	√	√		
Cote d'Ivoire	√	√			
Croatia	√	√	√	√	√
Cuba	√	√	√		
Cyprus	√	√			
Czech Republic	√	√	√	√	√
Denmark	√	√	√		
Djibouti	√	√	√	√	
Dominica	√	√			
Dominican Republic	√	√	√		
Ecuador	√	√	√		
Egypt	√	√	√	√	
El Salvador	√	√	√	√	
Equatorial Guinea.					
Estonia	√	√	√		
Ethiopia	√				
European Community	√	√	√	√	√
Federated States of Micronesia	√	√	√	√	√
Fiji	√	√	√		
Finland	√	√	√	√	√
France	√	√	√		
Gabon	√	√	√	√	√
Gambia	√	√			
Georgia	√	√	√	√	
Germany	√	√	√	√	
Ghana	√	√	√		
Greece	√	√	√		
Grenada	√	√	√	√	
Guatemala	√	√	√	√	√
Guinea	√	√			
Guyana	√	√	√	√	
Haiti	√	√	√	√	
Honduras	√	√	√		
Hungary	√	√	√	√	√
Iceland	√	√	√	√	
India	√	√			
Indonesia	√	√	√		
Iran, Islamic Republic of	√	√	√	√	
Ireland	√	√	√		
Israel	√	√	√		
Italy	√	√	√	√	
Jamaica	√	√	√		
Japan	√	√	√		
Jordan	√	√	√	√	√
Kazakhstan	√	√			
Kenya	√	√	√	√	
Kiribati	√				
Korea, Democratic People's Republic of	√	√	√	√	√
Korea, Republic of	√	√	√	√	
Kuwait	√	√	√		
Kyrgyzstan	√				
Lao, People's Democratic Republic	√				
Latvia	√	√	√	√	
Lebanon	√	√	√	√	
Lesotho	√				
Liberia	√	√	√		
Libyan Arab Jamahiriya	√	√			
Liechtenstein	√	√	√		
Lithuania	√	√	√		
Luxembourg	√	√	√	√	√
Macedonia, The Former Yugoslav Republic of	√	√	√	√	√
Madagascar	√	√	√	√	√
Malawi	√	√	√		
Malaysia	√	√	√	√	√
Maldives	√	√	√	√	
Mali	√	√			
Malta	√	√			

APPENDIX C TO PART 82 SUBPART A.—PARTIES TO THE MONTREAL PROTOCOL (AS OF JUNE 14, 2002).—Continued

[Updated lists of Parties to the Protocol and the Amendments can be located at the website for UNEP's Ozone Secretariat. A check mark indicates ratification/accession/acceptance/approval of the agreement.]

Foreign state	Montreal protocol	London amendments	Copenhagen amendments	Montreal amendments	Beijing amendments
Marshall Islands	√	√	√		
Mauritania	√				
Mauritius	√	√	√		
Mexico	√	√	√		
Moldova	√	√	√		
Monaco	√	√	√	√	
Mongolia	√	√	√	√	
Morocco	√	√	√		
Mozambique	√	√	√		
Myanmar	√	√			
Namibia	√	√			
Nauru	√				
Nepal	√	√			
Netherlands	√	√	√	√	√
New Zealand	√	√	√	√	√
Nicaragua	√	√	√		
Niger	√	√	√	√	
Nigeria	√	√	√	√	
Norway	√	√	√	√	√
Oman	√	√	√		
Pakistan	√	√	√		
Palau	√	√	√	√	√
Panama	√	√	√	√	√
Papua New Guinea	√	√			
Paraguay	√	√	√	√	
Peru	√	√	√		
Philippines	√	√	√		
Poland	√	√	√	√	
Portugal	√	√	√		
Qatar	√	√	√		
Romania	√	√	√	√	
Russian Federation	√	√			
Rwanda	√				
Saint Kitts & Nevis	√	√	√	√	√
Saint Lucia	√	√	√	√	√
Saint Vincent and the Grenadines	√	√	√		
Samoa	√	√	√	√	√
Sao Tome and Principe	√	√	√	√	√
Saudi Arabia	√	√	√		
Senegal	√	√	√	√	
Seychelles	√	√	√		
Sierra Leone	√	√	√	√	√
Singapore	√	√	√	√	
Slovakia	√	√	√	√	√
Slovenia	√	√	√	√	
Solomon Islands	√	√	√	√	
Somalia	√	√	√	√	√
South Africa	√	√	√		
Spain	√	√	√	√	√
Sri Lanka	√	√	√	√	
Sudan	√	√	√		
Suriname	√				
Swaziland	√				
Sweden	√	√	√	√	√
Switzerland	√	√	√		
Syrian Arab Republic	√	√	√	√	
Tajikistan	√	√			
Tanzania, United Republic of	√	√			
Thailand	√	√	√		
Togo	√	√	√	√	√
Tonga	√				
Trinidad and Tobago	√	√	√	√	
Tunisia	√	√	√	√	
Turkey	√	√	√		
Turkmenistan	√	√			
Tuvalu	√	√	√	√	
Uganda	√	√	√	√	
Ukraine	√	√	√	√	
United Arab Emirates	√				

APPENDIX C TO PART 82 SUBPART A.—PARTIES TO THE MONTREAL PROTOCOL (AS OF JUNE 14, 2002).—Continued

[Updated lists of Parties to the Protocol and the Amendments can be located at the website for UNEP's Ozone Secretariat. A check mark indicates ratification/accession/acceptance/approval of the agreement.]

Foreign state	Montreal protocol	London amendments	Copenhagen amendments	Montreal amendments	Beijing amendments
United Kingdom	√	√	√	√	√
United States of America	√	√	√		
Uruguay	√	√	√	√	
Uzbekistan	√	√	√		
Vanuatu	√	√	√		
Venezuela	√	√	√	√	
Viet Nam	√	√	√		
Yemen	√	√	√	√	
Yugoslavia	√				
Zambia	√	√			
Zimbabwe	√	√	√		

15. Add Appendix L to read as follows:

Appendix L to Part 82 Subpart A—Parties to the Montreal Protocol That Have Reported Production of HCFCs Since 1996 in Accordance With Article 7, paragraph 3, of the Montreal Protocol

Argentina
Australia
Brazil
Canada
China
France
Germany
Greece
India
Italy
Japan
Korea, Republic of
Mexico
Netherlands
Russian Federation
South Africa
Spain
United Kingdom
Venezuela

[FR Doc. 03–95 Filed 1–17–03; 8:45 am]

BILLING CODE 6560–50–P

Federal Register

Tuesday,
January 21, 2003

Part III

Department of Housing and Urban Development

Funding for Fiscal Year 2002: Capacity Building for Community Development and Affordable Housing; Notice

DEPARTMENT OF HOUSING AND URBAN DEVELOPMENT

[Docket No. FR–4784–N–01]

Funding for Fiscal Year 2002: Capacity Building for Community Development and Affordable Housing

AGENCY: Office of the Assistant Secretary for Community Planning and Development, HUD.

ACTION: Notice of funding for Fiscal Year (FY) 2002.

SUMMARY: The Fiscal Year 2002 HUD Appropriations Act provided $31,000,000 in Fiscal Year 2002 funds for activities authorized in section 4 of the HUD Demonstration Act of 1993. Section 4 authorizes the Secretary to establish by notice such requirements as may be necessary to carry out its provisions. This notice takes effect upon issuance.

FOR FURTHER INFORMATION CONTACT: Karen Daly, Office of Community Planning and Development, Department of Housing and Urban Development, 451 Seventh Street, SW., Room 7216, Washington, DC 20410. Telephone Number (202) 708–3176 Ext. 5552. Persons with hearing- or speech-impediments may access this number via TTY by calling the Federal Information Relay Service at 1–800–877–8339, or they may call: (202) 708–2565. Except for the ''800'' number, these are not toll-free telephone numbers.

SUPPLEMENTARY INFORMATION:

1. Authority

The Departments of Veterans Affairs and Housing and Urban Development and Independent Agencies Appropriations Act (Pub. L. 107–73, 115 Stat. 651, approved November 26, 2001) (VA/HUD FY 2002 Appropriations Act) makes $31,000,000 available from the Community Development Grants program for capacity building for community development and affordable housing as authorized by section 4 of the HUD Demonstration Act of 1993 (Pub. L. 103–120, 107 Stat. 1148, approved October 27, 1993) (42 U.S.C. 9816 *note*). HUD will provide this assistance through the Enterprise Foundation (Enterprise), the Local Initiatives Support Corporation (LISC), Habitat for Humanity, and Youthbuild USA ''to develop the capacity and ability of community development corporations and community housing development organizations to undertake community development and affordable housing projects and programs.''

2. Background

In Fiscal Year 1994, HUD provided $20 million to Enterprise and LISC through the National Community Development Initiative (NCDI), as authorized by section 4 of the HUD Demonstration Act of 1993. In FY 1996, $10 million for NCDI was authorized by section 12(b)(3) of the Housing Opportunity Program Extension Act of 1996 (Pub. L. 104–120, 110 Stat. 845, approved March 28, 1996). HUD divided appropriations equally between Enterprise and LISC. HUD published a notice in the **Federal Register** of March 30, 1994 (59 FR 14988), which set forth the requirements for receipt of these funds.

Today's notice contains requirements for the newly appropriated $31,000,000. These funds may be used for new activities or, in the case of Enterprise and LISC, to continue NCDI activities that received funding under the notice dated March 30, 1994 (59 FR 14988). New grant agreements will be executed to govern these NCDI activities.

3. Allocation and Form of Awards

The VA/HUD FY 2002 Appropriations Act provides $31,000,000 for activities authorized by section 4. Twenty-five million dollars of these funds is appropriated to Enterprise and LISC for activities authorized by section 4, as in effect immediately before June 12, 1997. HUD will equally divide $25,000,000 of the appropriated funds between Enterprise and LISC. The funds are to be used for capacity building for community development and affordable housing—provided that at least $5,000,000 of the funding is used in rural areas, including tribal areas. In addition, $4,000,000 is appropriated to Habitat for Humanity and $2,000,000 to Youthbuild USA for section 4 activities. Each organization will match the HUD assistance provided with resources from private sources in an amount equal to three times its share, as required by section 4. Enterprise and LISC each will use at least $2,500,000 of their $12,500,000 share for activities in rural areas, including tribal areas.

This notice, which takes effect upon issuance, also provides details regarding administrative and other requirements that shall apply to this program.

4. Eligible Activities

Eligible activities under this award include:

(a) Training, education, support, and advice to enhance the technical and administrative capabilities of community development corporations (CDCs) and community housing development organizations (CHDOs), including the capacity to participate in consolidated planning as well as in fair housing planning, continuum of care homeless assistance efforts, and HUD's Colonias Initiatives that help ensure community-wide participation in assessing area needs; consulting broadly within the community; cooperatively planning for the use of available resources in a comprehensive and holistic manner; and assisting in evaluating performance under these community efforts and in linking plans with neighboring communities in order to foster regional planning;

(b) Loans, grants, development assistance, predevelopment assistance, or other financial assistance to CDCs/CHDOs to carry out community development and affordable housing activities that benefit low-income families and persons, including the acquisition, construction, or rehabilitation of housing for low-income families and persons, and community and economic development activities which create jobs for low-income persons; and

(c) Such other activities as may be determined by Enterprise, LISC, Habitat for Humanity or Youthbuild USA in consultation with the Secretary or his designee.

5. Matching Requirements

As required by section 4 of the Demonstration Act of 1993, the $31,000,000 appropriation is subject to each award dollar being matched by three dollars in cash or in-kind contributions to be obtained from private sources. Each of the organizations receiving these funds will document its proportionate share of matching resources, including resources committed directly or by a third party to a grantee or subgrantee after November 26, 2001, to conduct activities.

In-kind contributions shall conform to the requirements of 24 CFR 84.23.

6. Administrative and Other Requirements

The award will be governed by 24 CFR part 84 (Uniform Administrative Requirements), OMB Circular A–122 (Cost Principles for Nonprofit Organizations), and OMB Circular A–133 (Audits of States, Local Governments, and Non-Profit Organizations).

Other requirements will be detailed in the terms and conditions of the grant agreement provided to grantees, including the following:

(a) Each grantee will submit to HUD a specific work and funding plan for

each community showing when and how the federal funds will be used. The work plan must be sufficiently detailed for monitoring purposes and must identify the performance goals and objectives to be achieved. Within 30 days after submission of a specific work plan, HUD will approve the work plan or notify the grantee of matters that need to be addressed prior to approval, or the work plan shall be construed to be approved. Work plans may be developed for less than the full dollar amount and term of the award, but no HUD-funded costs may be incurred for any activity until the work plan is approved by HUD. All activities also are subject to the environmental requirements in paragraph 6(f) of this notice.

(b) Each grantee shall submit to HUD an annual performance report due 90 days after the end of each calendar year, with the first report due on March 31, 2003. Performance reports shall include reports on both performance and financial progress under work plans and shall include reports on the commitment and expenditure of private matching resources utilized through the end of the reporting period. Reports shall conform to the reporting requirements of 24 CFR part 84. Additional information or increased frequency of reporting, not to exceed twice a year, may be required by HUD any time during the grant agreement if HUD finds such reporting to be necessary for monitoring purposes.

To further the consultation process and share the results of progress to date, the Secretary may require grantees to present and discuss their performance reports at annual meetings in Washington, DC during the life of the award.

(c) The performance reports must contain the information required under 24 CFR part 84, including a comparison of actual accomplishments with the objectives and performance goals of the work plans. In the work plans each grantee will identify performance goals and objectives established for each community in which it proposes to work and appropriate measurements under the work plan such as: the number of housing units and facilities each CDC/CHDO produces annually during the grant period and the average cost of these units. However, when the activity described in a work plan is not to be undertaken in a single community, a report indicating the areas in which the activity will be undertaken, along with appropriate goals and objectives, will be provided when that information is available. The performance reports also will include a discussion of the reasonableness of the unit costs; the reasons for slippage if established objectives and goals are not met; and additional pertinent information.

(d) A final performance report, in the form described in paragraph (c) above, shall be provided to HUD by each grantee within 90 days after the completion date of the award.

(e) Financial status reports (SF–269A) shall be submitted semiannually.

(f) Environmental review. Individual projects to be funded by these grants may not be known at the time the overall grants are awarded and also may not be known when some of the individual subgrants are made. Therefore, in accordance with 24 CFR 50.3(h), the application and the grant agreement must provide that no commitment or expenditure of HUD or local funds to a HUD-assisted project may be made until HUD has completed an environmental review to the extent required under applicable regulations and has given notification of its approval in accordance with 24 CFR 50.3(h).

7. Application Content

Grantees will be required to file an application containing the following:

(a) Application for Federal Assistance (OMB Standard Form 424), Non-construction Assurances (SF–424B), Certification Regarding Drug-Free Workplace Requirements, Certification Regarding Lobbying, and the Fair Housing and Equal Opportunity certification described in section 8(f) of this notice;

(b) A Summary Budget for the amount of funds being requested and a similar summary budget for any amounts to be committed to NCDI activities. The Budget Summary identifying costs for implementing the plan of suggested Technical Assistance (TA) activities by cost category, in accordance with the following:

(1) Direct Labor by position or individual, indicating the estimated hours per position, the rate per hour, estimated cost per staff position and the total estimated direct labor costs;

(2) Fringe Benefits by staff position identifying the rate, the salary base the rate was computed on, estimated cost per position, and the total estimated fringe benefit cost;

(3) Material Costs indicating the item, quantity, unit cost per item, estimated cost per item, and the total estimated material costs;

(4) Transportation Costs, as applicable;

(5) Equipment charges, if any. Equipment charges should identify the type of equipment, quantity, unit costs, and total estimated equipment costs;

(6) Consultant Costs, if applicable. Indicate the type, estimated number of consultant days, rate per day, total estimated consultant costs per consultant, and total estimated costs for all consultants;

(7) Subcontract Costs, if applicable. Indicate each individual subcontract and amount;

(8) Other Direct Costs listed by item, quantity, unit cost, total for each item listed, and total other direct costs for the award; and

(9) Indirect Costs which should identify the type, approved indirect cost rate, base to which the rate applies, and total indirect costs.

These line items should total the amount requested for each Community Development (CD)–TA program area. The grand total of all CD–TA program funds requested should reflect the grand total of all funds for which application is made.

8. Findings and Certifications

(a) *Environmental Impact.* A Finding of No Significant Impact with respect to the environment has been made in accordance with the Department's regulations at 24 CFR part 50, which implement section 102(2)(C) of the National Environmental Policy Act of 1969 (42 U.S.C. 4332). The Finding of No Significant Impact is available for public inspection between 7:30 a.m. and 5:30 p.m. weekdays at the Office of the Rules Docket Clerk, Room 10276, Department of Housing and Urban Development, 451 Seventh Street, SW., Washington, DC 20410.

(b) *Wage Rates.* Unless triggered by other federal funds for a project under this grant, the requirements of the Davis-Bacon Act do not apply.

(c) *Relocation.* The Uniform Relocation Act applies to anyone who is displaced as a result of acquisition, rehabilitation, or demolition for a HUD-assisted activity.

(d) *Federalism.* Executive Order 13132 (entitled ''Federalism'') prohibits, to the extent practicable by law, an agency from promulgating policies that have federalism implications and either impose substantial direct compliance costs on state and local governments and are not required by statute, or that preempt state law, unless the agency meets the relevant requirements of section 6 of the Executive Order. This notice does not have federalism implications and does not impose substantial direct compliance costs on state and local governments nor preempt state law within the meaning of the Executive Order.

(e) *Prohibition Against Lobbying Activities.* Applicants for funding under this notice are subject to the provisions of section 319 of the Department of Interior and Related Agencies Appropriation Act for Fiscal Year 1991, 31 U.S.C. 1352 (the Byrd Amendment) and to the provisions of the Lobbying Disclosure Act of 1995 (Pub. L. 104–65, approved December 19, 1995).

The Byrd Amendment, which is implemented in regulations at 24 CFR part 87, prohibits applicants for federal contracts and grants from using appropriated funds to attempt to influence federal executive or legislative officers or employees in connection with obtaining such assistance, or with its extension, continuation, renewal, amendment, or modification. The Byrd Amendment applies to the funds that are the subject of this notice. Therefore, applicants must file with their application a certification stating that they have not made and will not make any prohibited payments and, if any payments or agreement to make payments of nonappropriated funds for these purposes has been made, a form SF–LLL disclosing such payments must be submitted.

The Lobbying Disclosure Act of 1995 (Pub. L. 104–65, approved December 19, 1995), which repealed section 112 of the HUD Reform Act and resulted in the elimination of the regulations at 24 CFR part 86, requires all persons and entities who lobby covered Executive or Legislative Branch officials to register with the Secretary of the Senate and the Clerk of the House of Representatives and file reports concerning their lobbying activities.

(f) *Fair Housing and Equal Opportunity.* (1) *Threshold Requirements.* (i) *Compliance with Fair Housing and Civil Rights Laws.* Each organization receiving a grant under this notice and its subgrantees must comply with all fair housing and civil rights laws, statutes, regulations, and executive orders as enumerated in 24 CFR 5.105(a). Federally recognized Indian tribes must comply with the nondiscrimination provisions enumerated at 24 CFR 1003.601.

If an entity that receives funding under this notice: (a) Has been charged with a systemic violation of the Fair Housing Act by the Secretary alleging ongoing discrimination; (b) Is a defendant in a Fair Housing Act lawsuit filed by the Department of Justice alleging an ongoing pattern or practice of discrimination; or (c) Has received a letter of noncompliance findings under Title VI, Section 504, or Section 109, HUD will determine whether the charge, lawsuit, or letter of findings has been resolved to the satisfaction of the Department and, if not, will take appropriate action. HUD's decision regarding whether a charge, lawsuit, or a letter of findings has been satisfactorily resolved will be based upon whether appropriate actions have been taken to address allegations of ongoing discrimination in the policies or practices involved in the charge, lawsuit, or letter of findings.

(ii) *Nondiscrimination Requirements.* Each organization receiving a grant under this notice and its subgrantees must comply with the Americans with Disabilities Act of 1990 (42 U.S.C. 1201 *et seq.*), and Title IX of the Education Amendments Act of 1972 (20 U.S.C. 1681 *et seq.*).

(iii) *Affirmatively Furthering Fair Housing.* Each organization receiving a grant under this notice and its subgrantees have a duty to affirmatively further fair housing. Each organization and subgrantee should include in their application or work plan the specific steps that they will take to remedy discrimination in housing and to promote fair housing rights and fair housing choice.

(g) *Lead-based Paint Provisions.* Each organization receiving a grant under this notice and its subgrantees must comply with the applicable lead-based paint provisions of 24 CFR part 35, including subparts J and K.

(h) *Certification.* Applications must contain a certification that the organization receiving a grant under this notice and all subgrantees will comply with (1) all the requirements and authorities identified in section (f) of this notice; (2) section 3 of the Housing and Urban Development Act of 1968, as amended (12 U.S.C. 1701u); and (3) HUD's implementing regulations at 24 CFR part 135, which require that, to the greatest extent feasible, opportunities for training and employment be given to low-income persons residing within the unit of local government for the metropolitan area (or nonmetropolitan county) in which the project is located.

Authority: Section 4 of the HUD Demonstration Act of 1993 (Pub. L. 103–120, 42 U.S.C. 9816 *note*), as amended, Pub. L. 107–73, 115 Stat. 651.

Dated: January 9, 2003.

Roy A. Bernardi,

Assistant Secretary for Community Planning and Development.

[FR Doc. 03–1225 Filed 1–17–03; 8:45 am]

BILLING CODE 4210–29–P

Reader Aids

Federal Register

Vol. 68, No. 13

Tuesday, January 21, 2003

CUSTOMER SERVICE AND INFORMATION

Federal Register/Code of Federal Regulations	
General Information, indexes and other finding aids	**202–741–6000**
Laws	**741–6000**
Presidential Documents	
Executive orders and proclamations	**741–6000**
The United States Government Manual	**741–6000**
Other Services	
Electronic and on-line services (voice)	**741–6020**
Privacy Act Compilation	**741–6064**
Public Laws Update Service (numbers, dates, etc.)	**741–6043**
TTY for the deaf-and-hard-of-hearing	**741–6086**

ELECTRONIC RESEARCH

World Wide Web

Full text of the daily Federal Register, CFR and other publications is located at: **http://www.access.gpo.gov/nara**

Federal Register information and research tools, including Public Inspection List, indexes, and links to GPO Access are located at: **http://www.archives.gov/federal__register/**

E-mail

FEDREGTOC-L (Federal Register Table of Contents LISTSERV) is an open e-mail service that provides subscribers with a digital form of the Federal Register Table of Contents. The digital form of the Federal Register Table of Contents includes HTML and PDF links to the full text of each document.

To join or leave, go to **http://listserv.access.gpo.gov** and select *Online mailing list archives, FEDREGTOC-L, Join or leave the list (or change settings);* then follow the instructions.

PENS (Public Law Electronic Notification Service) is an e-mail service that notifies subscribers of recently enacted laws.

To subscribe, go to **http://hydra.gsa.gov/archives/publaws-l.html** and select *Join or leave the list* (or change settings); then follow the instructions.

FEDREGTOC-L and **PENS** are mailing lists only. We cannot respond to specific inquiries.

Reference questions. Send questions and comments about the Federal Register system to: **info@fedreg.nara.gov**

The Federal Register staff cannot interpret specific documents or regulations.

FEDERAL REGISTER PAGES AND DATE, JANUARY

1–254 2
255–458 3
459–662 6
663–994 7
995–1142 8
1143–1358 9
1359–1512 10
1513–1792 13
1793–1954 14
1955–2174 15
2175–2408 16
2409–2678 17
2679–2868 21

CFR PARTS AFFECTED DURING JANUARY

At the end of each month, the Office of the Federal Register publishes separately a List of CFR Sections Affected (LSA), which lists parts and sections affected by documents published since the revision date of each title.

3 CFR

Proclamations:
7636 995
7637 1951
7638 2173
7639 2409
Executive orders:
12543 (See Notice of January 2, 2003) 661
12544 (See Notice of January 2, 2003) 661
13249 (Superseded by 13282) 1133
13282 1133
Administrative orders:
Notices:
Notice of January 2, 2003 661
Presidential Determinations:
No. 2003-09 of January 7, 2003 1513
No. 2003-10 of January 10, 2003 2411
No. 2003-11 of January 10, 2003 2419

5 CFR

532 .....459, 460, 1515
831 2175
837 2175
842 2175
843 2175
844 2175
847 2175
Proposed Rules:
735 1987

7 CFR

97 1359
301 .....1360, 2679
318 2681
319 .....2681, 2684
906 1362
989 1143
996 1145
997 1145
998 1145
999 1145
1208 .....1364, 2108
Proposed Rules:
56 1169
300 69
723 1556
1464 1556
1794 1988
1951 1170
1962 1170
1965 1170

8 CFR

Proposed Rules:
217 292
231 292
251 292

9 CFR

82 1515
317 460
381 460
Proposed Rules:
Ch. 1 2703
94 2711

10 CFR

72 .....463, 2686

11 CFR

100 .....404, 421
102 421
104 .....404, 611
105 404
108 404
109 .....404, 421
110 .....421, 1793
114 421

12 CFR

201 1793
211 1158
550 2108
563 1218
Proposed Rules:
19 1116
24 1394
263 1116
308 1116
513 1116

14 CFR

1 1955
21 .....1512, 2183
23 .....1, 3
25 .....255, 1955
29 2183
36 .....1512, 2402
39 .....5, 10, 14, 16, 18, 23, 25, 27, 28, 31, 35, 257, 471, 473, 476, 479, 481, 483, 485, 486, 488, 997, 999, 1001, 1517, 1519, 1521, 1523, 1525, 1528, 1955, 1961, 2687
61 39
71 ...43, 44, 259, 260, 261, 262, 263, 490, 1657, 2185, 2186, 2187, 2421, 2422, 2423, 2424
91 1512
97 .....264, 491, 1794, 1955, 1962
Proposed Rules:
25 1932
39 .....71, 302, 305, 308, 311, 315, 317, 320, 322, 324,

516, 518, 1016, 1017, 1566, 1802, 1805, 2714
71 .....328, 2460, 2461, 2462, 2463
121.....1942
158.....1807
255.....1172
399.....1172

15 CFR

744.....1796
774.....1796
806.....1531
902 .....204, 2188, 2636

16 CFR

801.....2425
803.....2425
Proposed Rules:
Ch. 1 2465

17 CFR

230.....188
240.....188
420.....402
Proposed Rules:
4.....2254
210.....160
228.....2638
229.....2638
239.....160
240.....2638
249.....160, 2638
270.....160
274.....160, 2638

18 CFR

Ch. 1 45
260.....266
357.....266
385.....266
390.....1964

19 CFR

4.....1801
Proposed Rules:
101.....1172
103.....1173

21 CFR

510.....1161
1271.....2689
1308.....1964
Proposed Rules:
1.....1568

23 CFR

Proposed Rules:
970.....1080
971.....1088
972.....1096
973.....1105

24 CFR

Proposed Rules:
25.....1766
92.....648
203.....1766
570.....648
572.....648
574.....648
576.....648
582.....648
583.....648
585.....648

25 CFR

170.....1003
Proposed Rules:
Ch. 1 2465

26 CFR

1.....1534
301.....2691, 2695
602.....1534, 2695
Proposed Rules:
1.....1020, 2466

27 CFR

Proposed Rules:
9.....1020, 2262

29 CFR

4022.....1965
4044.....1965
Proposed Rules:
1910.....1023, 1399
1915.....1023, 1808
1926.....1023
2550.....992

30 CFR

250.....45
917.....2196, 2199
936.....2447
Proposed Rules:
250.....1808
901.....2263
916.....2265
920.....2268
938.....721
944.....521

31 CFR

103.....493
321.....2666
351.....2666
352.....2666
353.....2666
359.....2666
360.....2666
Proposed Rules:
103.....2716

32 CFR

700.....2697

33 CFR

117.....1366, 2201
165 .....1005, 1162, 1967, 2201, 2451
Proposed Rules:
151.....523
328.....1991
334.....1790, 1791

34 CFR

200.....1008

36 CFR

Proposed Rules:
7.....2466

38 CFR

17.....1009, 2670
Proposed Rules:
3.....2476

39 CFR

501.....2697
3001.....46
Proposed Rules:
111.....530
3001.....2272

40 CFR

9.....848
22.....2203
50.....614
52 .....663, 1366, 1370, 1970, 1972, 2204, 2206, 2208, 2211, 2217, 2454
62 .....48, 50, 52, 53
63.....2227
69.....1162
70.....1974
81 .....1370, 1657, 2217
82.....238, 2820
112.....1348
180 .....269, 274, 283, 2242
300 .....1537, 2247, 2699
710.....848
723.....848
Proposed Rules:
52 .....723, 1414, 1998, 2275, 2276, 2476, 2722
55.....1570
62.....76, 77
63 .....77, 78, 329, 1276, 1660, 1888, 2110, 2276
81.....1414
69.....1175
110.....1991
112.....1352, 1991
116.....1991
117.....1991
122.....1991
180.....1575
230.....1991
232.....1991
258.....2276
260.....2276
261.....531, 2276
264.....2276
265.....2276
266.....2276
270.....2276
271.....2276
279.....2276
281.....329
300 .....1580, 1991, 2277, 2726
401.....1991

41 CFR

Ch. 301 196
102-75.....1167
301-10 .....493, 2402

42 CFR

403.....1374
416.....1374
418.....1374
460.....1374
482.....1374
483.....1374
485.....1374

43 CFR

1860.....494

44 CFR

65.....1540, 1543
67 .....1547, 1549, 1550, 2477, 2479
Proposed Rules:
67.....1581, 1585

47 CFR

20.....2252
73 ...503, 504, 670, 1554, 1555, 1985, 1986, 2700, 2701
76.....670
Proposed Rules:
Ch. 1.....723, 730
15.....2730
2.....1999
73 .....532, 533, 1586, 1587, 1657, 2278, 2733, 2734
76.....1657, 2278
90.....1999

48 CFR

904.....55
952.....55
970.....55
Proposed Rules:
505.....1358

49 CFR

107.....13425
192.....56
195.....56
219.....57
571.....504
Proposed Rules:
10.....2002
171.....1013, 2734
172.....2734
173.....2734
177.....2734
178.....2734
179.....2734
180.....2734
571.....2003, 2480

50 CFR

17.....1220
20.....1388
300.....1392
622.....2188
635.....711
648 .....57, 60, 533
660.....908
679 .....715, 1392, 2636
Proposed Rules:
17.....331, 2283
18.....1175
229.....1414
635.....1024, 1430
648.....1587, 2303
660.....936

REMINDERS

The items in this list were editorially compiled as an aid to Federal Register users. Inclusion or exclusion from this list has no legal significance.

RULES GOING INTO EFFECT JANUARY 21, 2003

AGRICULTURE DEPARTMENT

Animal and Plant Health Inspection Service

Hawaiian and territorial quarantine notices; and plant-related quarantine, foreign:

Fruits and vegetables; movement and importation; published 1-21-03

Plant-related quarantine, foreign:

Corpus Christi, TX; fresh fruits; cold treatment; published 1-21-03

COMMERCE DEPARTMENT

National Oceanic and Atmospheric Administration

Fishery conservation and management:

Alaska; fisheries of Exclusive Economic Zone—

Pollock; published 1-22-03

DEFENSE DEPARTMENT

Navy Department

Agency regulations; amendments; published 1-21-03

ENVIRONMENTAL PROTECTION AGENCY

Air programs:

Stratospheric ozone protection—

Hydrochlorofluorocarbons (HCFCs); production and consumption control; allowance system; published 1-21-03

Air quality implementation plans; approval and promulgation; various States; etc.:

Missouri; published 11-22-02

Air quality implementation plans; approval and promulgation; various States:

Indiana; published 11-20-02

Kentucky; published 11-19-02

Missouri; published 11-22-02

Hazardous waste program authorizations:

Georgia; published 11-19-02

Superfund program:

National oil and hazardous substances contingency plan—

National priorities list update; published 1-21-03

FEDERAL COMMUNICATIONS COMMISSION

Radio stations; table of assignments:

Various States; published 1-21-03

HEALTH AND HUMAN SERVICES DEPARTMENT

Food and Drug Administration

Medical devices:

General and plastic surgery devices—

Absorbable polydioxanone surgical suture; reclassification and codification; published 12-19-02

INTERIOR DEPARTMENT

Indian Affairs Bureau

Human services:

Arrangement with State, Territories, or other agencies for relief of distress and social welfare of Indians; CFR part removed; published 12-19-02

POSTAL SERVICE

Postage meters:

Manufacture and distribution; authorization; published 1-21-03

TRANSPORTATION DEPARTMENT

Federal Aviation Administration

Airworthiness directives:

Honeywell; published 12-16-02

TREASURY DEPARTMENT

Internal Revenue Service

Procedure and administration:

Census Bureau; return information disclosure; published 1-21-03

Returns and return information disclosure by other agencies; published 1-21-03

COMMENTS DUE NEXT WEEK

AGRICULTURE DEPARTMENT

Agricultural Marketing Service

Onions grown in—

Texas; comments due by 1-27-03; published 12-26-02 [FR 02-32505]

Raisins produced from grapes grown in—

California; comments due by 1-28-03; published 11-29-02 [FR 02-30355]

AGRICULTURE DEPARTMENT

Animal and Plant Health Inspection Service

Interstate transportation of animals and animal products (quarantine):

Blood and tissue collection at slaughtering establishments; comments due by 1-27-03; published 11-27-02 [FR 02-30093]

Exotic Newcastle disease; quarantine area designations—

California; comments due by 1-27-03; published 11-26-02 [FR 02-29987]

AGRICULTURE DEPARTMENT

Food and Nutrition Service

Food Stamp Program:

Civil rights data collection; comments due by 1-27-03; published 11-27-02 [FR 02-30112]

COMMERCE DEPARTMENT

National Oceanic and Atmospheric Administration

Fishery conservation and management:

Magnuson-Stevens Act provisions—

Bering Sea and Aleutian Islands king and tanner crabs; fishing capacity reduction program; comments due by 1-27-03; published 12-12-02 [FR 02-31218]

Magnuson-Stevens Act provisions—

Bering Sea and Aleutian Islands king and tanner crabs; fishing capacity reduction program; correction; comments due by 1-29-03; published 12-30-02 [FR 02-32744]

Northeastern United States fisheries—

Atlantic sea scallop; comments due by 1-31-03; published 1-16-03 [FR 03-01025]

DEFENSE DEPARTMENT

Air Force Department

Privacy Act; implementation; comments due by 1-28-03; published 11-29-02 [FR 02-29812]

DEFENSE DEPARTMENT

Privacy Act; implementation; comments due by 1-28-03; published 11-29-02 [FR 02-29816]

DEFENSE DEPARTMENT

Engineers Corps

Danger zones and restricted areas:

Charleston, SC; Naval Weapons Station; comments due by 1-27-03; published 12-26-02 [FR 02-32458]

ENVIRONMENTAL PROTECTION AGENCY

Air programs:

Ambient air quality standards, national—

Ozone; 1-hour standard applicability; stay of authority; comments due by 1-27-03; published 12-27-02 [FR 02-32577]

Particulate matter; comments due by 1-30-03; published 12-31-02 [FR 02-32384]

Particulate matter; comments due by 1-30-03; published 12-31-02 [FR 02-32385]

Air quality implementation plans; approval and promulgation; various States:

Indiana; comments due by 1-30-03; published 12-31-02 [FR 02-31668]

Kentucky; comments due by 1-29-03; published 12-30-02 [FR 02-32777]

North Carolina; comments due by 1-27-03; published 12-27-02 [FR 02-32137]

Solid wastes:

Hazardous waste; identification and listing—

Used cathode ray tubes; Region III Mid-Atlantic States; exclusion; comments due by 1-27-03; published 12-26-02 [FR 02-32547]

Used cathode ray tubes; Region III Mid-Atlantic States; exclusion; comments due by 1-27-03; published 12-26-02 [FR 02-32551]

Water pollution control:

National Pollutant Discharge Elimination System—

Cooling water intake structures for new facilities; comments due by 1-27-03; published 12-26-02 [FR 02-32611]

National pollutant discharge elimination system—

Storm water discharges for oil and gas construction activity that disturbs one to five acres of land; permit deadline; comments due by 1-29-03; published 12-30-02 [FR 02-32984]

Water pollution; effluent guidelines for point source categories:

Concentrated aquatic animal production facilities; comments due by 1-27-03; published 12-2-02 [FR 02-30466]

Water programs:

Oil pollution prevention and response; non-transportation-related onshore and offshore facilities; comments due by 1-29-03; published 1-9-03 [FR 03-00391]

Water quality planning and management and National Pollutant Discharge Elimination System program; total maximum daily loads; comments due by 1-27-03; published 12-27-02 [FR 02-32582]

FEDERAL COMMUNICATIONS COMMISSION

Common carrier services:

Federal-State Joint Board on Universal Service—

Universal service contribution methodology; comments due by 1-29-03; published 12-30-02 [FR 02-32926]

Telephone Consumer Protection Act; implementation—

Unsolicited advertising; comments due by 1-31-03; published 12-26-02 [FR 02-32649]

Practice and procedure:

Competitive market conditions with respect to commercial mobile services; annual report and analysis; comments due by 1-27-03; published 1-7-03 [FR 03-00218]

Radio stations; table of assignments:

Arizona and New Mexico; comments due by 1-30-03; published 12-24-02 [FR 02-32293]

Texas; comments due by 1-30-03; published 12-24-02 [FR 02-32289]

Wyoming and Colorado; comments due by 1-30-03; published 1-13-03 [FR 03-00533]

FEDERAL ELECTION COMMISSION

Contribution and expenditure limitations and prohibitions:

Leadership PACs; comments due by 1-31-03; published 12-26-02 [FR 02-32451]

FEDERAL RESERVE SYSTEM

Truth in lending (Regulation Z):

Official staff commentary; amendments; comments due by 1-27-03; published 12-6-02 [FR 02-30545]

INTERIOR DEPARTMENT

Fish and Wildlife Service

Endangered and threatened species:

Critical habitat designations—

Bull trout; Klamath River and Columbia River distinct population segments; comments due by 1-28-03; published 11-29-02 [FR 02-29232]

Plant species from Oahu, HI; comments due by 1-27-03; published 12-26-02 [FR 02-32522]

Marine mammals:

Incidental take during specified activities—

Florida manatees; watercraft and watercraft access facilities; comments due by 1-27-03; published 1-9-03 [FR 03-00357]

INTERIOR DEPARTMENT

National Park Service

Commercial use authorizations; issuance and administration; comments due by 1-27-03; published 11-27-02 [FR 02-29783]

INTERIOR DEPARTMENT

Surface Mining Reclamation and Enforcement Office

Permanent program and abandoned mine land reclamation plan submissions:

Kansas; comments due by 1-31-03; published 1-16-03 [FR 03-00974]

JUSTICE DEPARTMENT

Immigration and Naturalization Service

Immigration:

Mexican and Canadian borders; biometric border crossing identification cards and elimination of non-biometric BCCs; comments due by 1-31-03; published 12-2-02 [FR 02-30295]

LABOR DEPARTMENT

Occupational Safety and Health Administration

Safety and health standards, etc.:

Standards improvement project (Phase II); comments due by 1-30-03; published 1-8-03 [FR 03-00316]

Safety and health standards:

Mechanical power presses; presence sensing device initiation; comments due by 1-27-03; published 8-28-02 [FR 02-21834]

LABOR DEPARTMENT

Workers' Compensation Programs Office

Energy Employees Occupational Illness Compensation Program Act; implementation:

Lump-sum payments and medical benefits payments to covered DOE employees, their survivors, and certain vendors, contractors, and subcontractors; comments due by 1-27-03; published 12-26-02 [FR 02-31841]

NATIONAL CREDIT UNION ADMINISTRATION

Credit unions:

Prompt corrective action—

Net worth restoration plans; comments due by 1-28-03; published 11-29-02 [FR 02-30089]

TRANSPORTATION DEPARTMENT

Coast Guard

Drawbridge operations:

New York; comments due by 1-27-03; published 12-27-02 [FR 02-32688]

Ports and waterways safety:

Commencement Bay, Tacoma, WA; Olympic View superfund cleanup site; regulated navigation area; comments due by 1-31-03; published 12-2-02 [FR 02-30435]

TRANSPORTATION DEPARTMENT

Airport concessions; disadvantaged business enterprises participation; comments due by 1-27-03; published 12-12-02 [FR 02-31338]

Personnel:

Board for Correction of Coast Guard Military Records; application procedures clarification, etc.; comments due by 1-27-03; published 12-11-02 [FR 02-30933]

TRANSPORTATION DEPARTMENT

Federal Aviation Administration

Air traffic operating and flight rules, etc.:

Area navigation and miscellaneous amendments; comments due by 1-31-03; published 12-17-02 [FR 02-31150]

Airworthiness directives:

Airbus; comments due by 1-28-03; published 1-3-03 [FR 03-00028]

McDonnell Douglas; comments due by 1-27-03; published 11-26-02 [FR 02-29804]

Rolls-Royce plc; comments due by 1-31-03; published 12-2-02 [FR 02-30350]

Rolls-Royce plc.; comments due by 1-28-03; published 11-29-02 [FR 02-29001]

SOCATA-Groupe Aerospatiale; comments due by 1-31-03; published 12-24-02 [FR 02-32336]

Turbomeca; comments due by 1-31-03; published 12-2-02 [FR 02-30351]

Twin Commander Aircraft Corp.; comments due by 1-31-03; published 12-3-02 [FR 02-30496]

Class E airspace; comments due by 1-27-03; published 12-12-02 [FR 02-31347]

TRANSPORTATION DEPARTMENT

Saint Lawrence Seaway Development Corporation

Seaway regulations and rules:

Automatic Identification System transponder; comments due by 1-27-03; published 11-27-02 [FR 02-30095]

TREASURY DEPARTMENT

Fiscal Service

Federal claims collection:

Centralized offset of Federal payments to collect nontax debts owed to U.S.; comments due by 1-27-03; published 12-26-02 [FR 02-32572]

LIST OF PUBLIC LAWS

This is a continuing list of public bills from the current session of Congress which have become Federal laws. It may be used in conjunction with "P L U S" (Public Laws Update Service) on 202–741–6043. This list is also available online at *http://www.nara.gov/fedreg/plawcurr.html*.

The text of laws is not published in the **Federal Register** but may be ordered in ''slip law'' (individual pamphlet) form from the Superintendent of Documents, U.S. Government Printing Office, Washington, DC 20402 (phone, 202–512–1808). The text will also be made available on the Internet from GPO Access at *http://www.access.gpo.gov/nara/nara005.html*. Some laws may not yet be available.

H.R. 11/P.L. 108–3

National Flood Insurance Program Reauthorization Act of 2003 (Jan. 13, 2003; 117 Stat. 7)

Last List January 14, 2003

Public Laws Electronic Notification Service (PENS)

PENS is a free electronic mail notification service of newly enacted public laws. To subscribe, go to *http://hydra.gsa.gov/archives/publaws-l.html* or send E-mail to **listserv@listserv.gsa.gov** with the following text message:

SUBSCRIBE PUBLAWS-L Your Name.

Note: This service is strictly for E-mail notification of new laws. The text of laws is not available through this service. **PENS** cannot respond to specific inquiries sent to this address.

CFR CHECKLIST

This checklist, prepared by the Office of the Federal Register, is published weekly. It is arranged in the order of CFR titles, stock numbers, prices, and revision dates.

An asterisk (*) precedes each entry that has been issued since last week and which is now available for sale at the Government Printing Office.

A checklist of current CFR volumes comprising a complete CFR set, also appears in the latest issue of the LSA (List of CFR Sections Affected), which is revised monthly.

The CFR is available free on-line through the Government Printing Office's GPO Access Service at http://www.access.gpo.gov/nara/cfr/index.html. For information about GPO Access call the GPO User Support Team at 1-888-293-6498 (toll free) or 202-512-1530.

The annual rate for subscription to all revised paper volumes is $1195.00 domestic, $298.75 additional for foreign mailing.

Mail orders to the Superintendent of Documents, Attn: New Orders, P.O. Box 371954, Pittsburgh, PA 15250–7954. All orders must be accompanied by remittance (check, money order, GPO Deposit Account, VISA, Master Card, or Discover). Charge orders may be telephoned to the GPO Order Desk, Monday through Friday, at **(202) 512–1800** from 8:00 a.m. to 4:00 p.m. eastern time, or FAX your charge orders to **(202) 512-2250**.

Title	Stock Number	Price	Revision Date
1, 2 (2 Reserved)	(869–048–00001–1)	9.00	Jan. 1, 2002
3 (1997 Compilation and Parts 100 and 101)	(869–048–00002–0)	59.00	[1] Jan. 1, 2002
4	(869–048–00003–8)	9.00	[4] Jan. 1, 2002
5 Parts:			
1–699	(869–048–00004–6)	57.00	Jan. 1, 2002
700–1199	(869–048–00005–4)	47.00	Jan. 1, 2002
1200–End, 6 (6 Reserved)	(869–048–00006–2)	58.00	Jan. 1, 2002
7 Parts:			
1–26	(869–048–00001–1)	41.00	Jan. 1, 2002
27–52	(869–048–00008–9)	47.00	Jan. 1, 2002
53–209	(869–048–00009–7)	36.00	Jan. 1, 2002
210–299	(869–048–00010–1)	59.00	Jan. 1, 2002
300–399	(869–048–00011–9)	42.00	Jan. 1, 2002
400–699	(869–048–00012–7)	57.00	Jan. 1, 2002
700–899	(869–048–00013–5)	54.00	Jan. 1, 2002
900–999	(869–048–00014–3)	58.00	Jan. 1, 2002
1000–1199	(869–048–00015–1)	25.00	Jan. 1, 2002
1200–1599	(869–048–00016–0)	58.00	Jan. 1, 2002
1600–1899	(869–048–00017–8)	61.00	Jan. 1, 2002
1900–1939	(869–048–00018–6)	29.00	Jan. 1, 2002
1940–1949	(869–048–00019–4)	53.00	Jan. 1, 2002
1950–1999	(869–048–00020–8)	47.00	Jan. 1, 2002
2000–End	(869–048–00021–6)	46.00	Jan. 1, 2002
8	(869–048–00022–4)	58.00	Jan. 1, 2002
9 Parts:			
1–199	(869–048–00023–2)	58.00	Jan. 1, 2002
200–End	(869–048–00024–1)	56.00	Jan. 1, 2002
10 Parts:			
1–50	(869–048–00025–4)	58.00	Jan. 1, 2002
51–199	(869–048–00026–7)	56.00	Jan. 1, 2002
200–499	(869–048–00027–5)	44.00	Jan. 1, 2002
500–End	(869–048–00028–3)	58.00	Jan. 1, 2002
11	(869–048–00029–1)	34.00	Jan. 1, 2002
12 Parts:			
1–199	(869–048–00030–5)	30.00	Jan. 1, 2002
200–219	(869–048–00031–3)	36.00	Jan. 1, 2002
220–299	(869–048–00032–1)	58.00	Jan. 1, 2002
300–499	(869–048–00033–0)	45.00	Jan. 1, 2002
500–599	(869–048–00034–8)	42.00	Jan. 1, 2002
600–End	(869–048–00035–6)	61.00	Jan. 1, 2002
13	(869–048–00036–4)	47.00	Jan. 1, 2002
14 Parts:			
1–59	(869–048–00037–2)	60.00	Jan. 1, 2002
60–139	(869–048–00038–1)	58.00	Jan. 1, 2002
140–199	(869–048–00039–9)	29.00	Jan. 1, 2002
200–1199	(869–048–00040–2)	47.00	Jan. 1, 2002
1200–End	(869–048–00041–1)	41.00	Jan. 1, 2002
15 Parts:			
0–299	(869–048–00042–9)	37.00	Jan. 1, 2002
300–799	(869–048–00043–7)	58.00	Jan. 1, 2002
800–End	(869–048–00044–5)	40.00	Jan. 1, 2002
16 Parts:			
0–999	(869–048–00045–3)	47.00	Jan. 1, 2002
1000–End	(869–048–00046–1)	57.00	Jan. 1, 2002
17 Parts:			
1–199	(869–048–00048–8)	47.00	Apr. 1, 2002
200–239	(869–048–00049–6)	55.00	Apr. 1, 2002
240–End	(869–048–00050–0)	59.00	Apr. 1, 2002
18 Parts:			
1–399	(869–048–00051–8)	59.00	Apr. 1, 2002
400–End	(869–048–00052–6)	24.00	Apr. 1, 2002
19 Parts:			
1–140	(869–048–00053–4)	57.00	Apr. 1, 2002
141–199	(869–048–00054–2)	56.00	Apr. 1, 2002
200–End	(869–048–00055–1)	29.00	Apr. 1, 2002
20 Parts:			
1–399	(869–048–00056–9)	47.00	Apr. 1, 2002
400–499	(869–048–00057–7)	60.00	Apr. 1, 2002
500–End	(869–048–00058–5)	60.00	Apr. 1, 2002
21 Parts:			
1–99	(869–048–00059–3)	39.00	Apr. 1, 2002
100–169	(869–048–00060–7)	46.00	Apr. 1, 2002
170–199	(869–048–00061–5)	47.00	Apr. 1, 2002
200–299	(869–048–00062–3)	16.00	Apr. 1, 2002
300–499	(869–048–00063–1)	29.00	Apr. 1, 2002
500–599	(869–048–00064–0)	46.00	Apr. 1, 2002
600–799	(869–048–00065–8)	16.00	Apr. 1, 2002
800–1299	(869–048–00066–6)	56.00	Apr. 1, 2002
1300–End	(869–048–00067–4)	22.00	Apr. 1, 2002
22 Parts:			
1–299	(869–048–00068–2)	59.00	Apr. 1, 2002
300–End	(869–048–00069–1)	43.00	Apr. 1, 2002
23	(869–048–00070–4)	40.00	Apr. 1, 2002
24 Parts:			
0–199	(869–048–00071–2)	57.00	Apr. 1, 2002
200–499	(869–048–00072–1)	47.00	Apr. 1, 2002
500–699	(869–048–00073–9)	29.00	Apr. 1, 2002
700–1699	(869–048–00074–7)	58.00	Apr. 1, 2002
1700–End	(869–048–00075–5)	29.00	Apr. 1, 2002
25	(869–048–00076–3)	68.00	Apr. 1, 2002
26 Parts:			
§§ 1.0-1–1.60	(869–048–00077–1)	45.00	Apr. 1, 2002
§§ 1.61–1.169	(869–048–00078–0)	58.00	Apr. 1, 2002
§§ 1.170–1.300	(869–048–00079–8)	55.00	Apr. 1, 2002
§§ 1.301–1.400	(869–048–00080–1)	44.00	Apr. 1, 2002
§§ 1.401–1.440	(869–048–00081–0)	60.00	Apr. 1, 2002
§§ 1.441-1.500	(869-048-00082-8)	47.00	Apr. 1, 2002
§§ 1.501–1.640	(869–048–00083–6)	44.00	[6] Apr. 1, 2002
§§ 1.641–1.850	(869–048–00084–4)	57.00	Apr. 1, 2002
§§ 1.851–1.907	(869–048–00085–2)	57.00	Apr. 1, 2002
§§ 1.908–1.1000	(869–048–00086–1)	56.00	Apr. 1, 2002
§§ 1.1001–1.1400	(869–048–00087–9)	58.00	Apr. 1, 2002
§§ 1.1401–End	(869–048–00088–7)	61.00	Apr. 1, 2002
2–29	(869–048–00089–5)	57.00	Apr. 1, 2002
30–39	(869–048–00090–9)	39.00	Apr. 1, 2002
40–49	(869–048–00091–7)	26.00	Apr. 1, 2002
50–299	(869–048–00092–5)	38.00	Apr. 1, 2002
300–499	(869–048–00093–3)	57.00	Apr. 1, 2002
500–599	(869–048–00094–1)	12.00	[5] Apr. 1, 2002
600–End	(869–048–00095–0)	16.00	Apr. 1, 2002
27 Parts:			
1–199	(869–048–00096–8)	61.00	Apr. 1, 2002

Title	Stock Number	Price	Revision Date
200–End	(869–048–00097–6)	13.00	Apr. 1, 2002
28 Parts:			
0-42	(869–048–00098–4)	58.00	July 1, 2002
43-end	(869-048-00099-2)	55.00	July 1, 2002
29 Parts:			
0–99	(869–048–00100–0)	45.00	[8]July 1, 2002
100–499	(869–048–00101–8)	21.00	July 1, 2002
500–899	(869–048–00102–6)	58.00	July 1, 2002
900–1899	(869–048–00103–4)	35.00	July 1, 2002
1900–1910 (§§ 1900 to 1910.999)	(869–048–00104–2)	58.00	July 1, 2002
1910 (§§ 1910.1000 to end)	(869–048–00105–1)	42.00	[8]July 1, 2002
1911–1925	(869–048–00106–9)	29.00	July 1, 2002
1926	(869–048–00107–7)	47.00	July 1, 2002
1927–End	(869–048–00108–5)	59.00	July 1, 2002
30 Parts:			
1–199	(869–048–00109–3)	56.00	July 1, 2002
200–699	(869–048–00110–7)	47.00	July 1, 2002
700–End	(869–048–00111–5)	56.00	July 1, 2002
31 Parts:			
0–199	(869–048–00112–3)	35.00	July 1, 2002
200–End	(869–048–00113–1)	60.00	July 1, 2002
32 Parts:			
1–39, Vol. I		15.00	[2] July 1, 1984
1–39, Vol. II		19.00	[2] July 1, 1984
1–39, Vol. III		18.00	[2] July 1, 1984
1–190	(869–048–00114–0)	56.00	July 1, 2002
191–399	(869–048–00115–8)	60.00	July 1, 2002
400–629	(869–048–00116–6)	47.00	July 1, 2002
630–699	(869–048–00117–4)	37.00	July 1, 2002
700–799	(869–048–00118–2)	44.00	July 1, 2002
800–End	(869–048–00119–1)	46.00	July 1, 2002
33 Parts:			
1–124	(869–048–00120–4)	47.00	July 1, 2002
125–199	(869–048–00121–2)	60.00	July 1, 2002
200–End	(869–048–00122–1)	47.00	July 1, 2002
34 Parts:			
1–299	(869–048–00123–9)	45.00	July 1, 2002
300–399	(869–048–00124–7)	43.00	July 1, 2002
400–End	(869–048–00125–5)	59.00	July 1, 2002
35	(869–048–00126–3)	10.00	[7]July 1, 2002
36 Parts			
1–199	(869–048–00127–1)	36.00	July 1, 2002
200–299	(869–048–00128–0)	35.00	July 1, 2002
300–End	(869–048–00129–8)	58.00	July 1, 2002
37	(869–048–00130–1)	47.00	July 1, 2002
38 Parts:			
0–17	(869–048–00131–0)	57.00	July 1, 2002
18–End	(869–048–00132–8)	58.00	July 1, 2002
39	(869–048–00133–6)	40.00	July 1, 2002
40 Parts:			
1–49	(869–048–00134–4)	57.00	July 1, 2002
50–51	(869–048–00135–2)	40.00	July 1, 2002
52 (52.01–52.1018)	(869–048–00136–1)	55.00	July 1, 2002
52 (52.1019–End)	(869–048–00137–9)	58.00	July 1, 2002
53–59	(869–048–00138–7)	29.00	July 1, 2002
60 (60.1–End)	(869–048–00139–5)	56.00	July 1, 2002
60 (Apps)	(869–048–00140–9)	51.00	[8]July 1, 2002
61–62	(869–048–00141–7)	38.00	July 1, 2002
63 (63.1–63.599)	(869–048–00142–5)	56.00	July 1, 2002
63 (63.600–63.1199)	(869–048–00143–3)	46.00	July 1, 2002
63 (63.1200-End)	(869–048–00144–1)	61.00	July 1, 2002
64–71	(869–048–00145–0)	29.00	July 1, 2002
72–80	(869–048–00146–8)	59.00	July 1, 2002
81–85	(869–048–00147–6)	47.00	July 1, 2002
86 (86.1–86.599–99)	(869–048–00148–4)	52.00	[8]July 1, 2002
86 (86.600–1–End)	(869–048–00149–2)	47.00	July 1, 2002
87–99	(869–048–00150–6)	57.00	July 1, 2002
100–135	(869–048–00151–4)	42.00	July 1, 2002
136–149	(869–048–00152–2)	58.00	July 1, 2002
150–189	(869–048–00153–1)	47.00	July 1, 2002
190–259	(869–048–00154–9)	37.00	July 1, 2002
260–265	(869–048–00155–7)	47.00	July 1, 2002
266–299	(869–048–00156–5)	47.00	July 1, 2002
300–399	(869–048–00157–3)	43.00	July 1, 2002
400–424	(869–048–00158–1)	54.00	July 1, 2002
425–699	(869–048–00159–0)	59.00	July 1, 2002
700–789	(869–048–00160–3)	58.00	July 1, 2002
790–End	(869–048–00161–1)	45.00	July 1, 2002
41 Chapters:			
1, 1–1 to 1–10		13.00	[3] July 1, 1984
1, 1–11 to Appendix, 2 (2 Reserved)		13.00	[3] July 1, 1984
3–6		14.00	[3] July 1, 1984
7		6.00	[3] July 1, 1984
8		4.50	[3] July 1, 1984
9		13.00	[3] July 1, 1984
10–17		9.50	[3] July 1, 1984
18, Vol. I, Parts 1–5		13.00	[3] July 1, 1984
18, Vol. II, Parts 6–19		13.00	[3] July 1, 1984
18, Vol. III, Parts 20–52		13.00	[3] July 1, 1984
19–100		13.00	[3] July 1, 1984
1–100	(869–048–00162–0)	23.00	July 1, 2002
101	(869–048–00163–8)	43.00	July 1, 2002
102–200	(869–048–00164–6)	41.00	July 1, 2002
201–End	(869–048–00165–4)	24.00	July 1, 2002
42 Parts:			
1–399	(869–048–00166–2)	56.00	Oct. 1, 2002
400–429	(869–048–00167–1)	59.00	Oct. 1, 2002
430–End	(869–048–00168–9)	61.00	Oct. 1, 2002
43 Parts:			
1–999	(869–048–00169–7)	47.00	Oct. 1, 2002
1000–end	(869–048–00170–1)	59.00	Oct. 1, 2002
44	(869–048–00171–9)	47.00	Oct. 1, 2002
45 Parts:			
1–199	(869–048–00172–7)	57.00	Oct. 1, 2002
200–499	(869–048–00173–5)	31.00	[9]Oct. 1, 2002
500–1199	(869–048–00174–3)	47.00	Oct. 1, 2002
1200–End	(869–048–00175–1)	57.00	Oct. 1, 2002
46 Parts:			
1–40	(869–048–00176–0)	44.00	Oct. 1, 2002
41–69	(869–048–00177–8)	37.00	Oct. 1, 2002
70–89	(869–048–00178–6)	14.00	Oct. 1, 2002
*90–139	(869–048–00179–4)	42.00	Oct. 1, 2002
140–155	(869–048–00180–8)	24.00	[9]Oct. 1, 2002
156–165	(869–048–00181–6)	31.00	[9]Oct. 1, 2002
166–199	(869–048–00182–4)	44.00	Oct. 1, 2002
200–499	(869–048–00183–2)	37.00	Oct. 1, 2002
500–End	(869–048–00184–1)	24.00	Oct. 1, 2002
47 Parts:			
0–19	(869–048–00185–9)	57.00	Oct. 1, 2002
20–39	(869–048–00186–7)	45.00	Oct. 1, 2002
*40–69	(869–048–00187–5)	36.00	Oct. 1, 2002
*70–79	(869–048–00188–3)	58.00	Oct. 1, 2002
*80–End	(869–048–00189–1)	57.00	Oct. 1, 2002
48 Chapters:			
*1 (Parts 1–51)	(869–048–00190–5)	59.00	Oct. 1, 2002
1 (Parts 52–99)	(869–044–00191–8)	45.00	Oct. 1, 2001
2 (Parts 201–299)	(869–048–00192–1)	53.00	Oct. 1, 2002
3–6	(869–048–00193–0)	30.00	Oct. 1, 2002
*7–14	(869–048–00194–8)	47.00	Oct. 1, 2002
15–28	(869–044–00195–1)	53.00	Oct. 1, 2001
29–End	(869–048–00196–4)	38.00	[9]Oct. 1, 2002
49 Parts:			
1–99	(869–048–00197–2)	56.00	Oct. 1, 2002
100–185	(869–044–00198–5)	60.00	Oct. 1, 2001
186–199	(869–048–00199–9)	18.00	Oct. 1, 2002
200–399	(869–044–00200–1)	60.00	Oct. 1, 2001
400–999	(869–044–00201–9)	58.00	Oct. 1, 2001
1000–1199	(869–048–00202–2)	25.00	Oct. 1, 2002

Title	Stock Number	Price	Revision Date
1200–End	(869–048–00203–1)	30.00	Oct. 1, 2002
50 Parts:			
1–199	(869–044–00204–3)	63.00	Oct. 1, 2001
200–599	(869–048–00206–5)	38.00	Oct. 1, 2002
600–End	(869–044–00206–0)	55.00	Oct. 1, 2001
CFR Index and Findings Aids	(869–048–00047–0)	59.00	Jan. 1, 2002
Complete 2001 CFR set		1,195.00	2001
Microfiche CFR Edition:			
Subscription (mailed as issued)		298.00	2000
Individual copies		2.00	2000
Complete set (one-time mailing)		290.00	2000
Complete set (one-time mailing)		247.00	1999

[1] Because Title 3 is an annual compilation, this volume and all previous volumes should be retained as a permanent reference source.

[2] The July 1, 1985 edition of 32 CFR Parts 1–189 contains a note only for Parts 1–39 inclusive. For the full text of the Defense Acquisition Regulations in Parts 1–39, consult the three CFR volumes issued as of July 1, 1984, containing those parts.

[3] The July 1, 1985 edition of 41 CFR Chapters 1–100 contains a note only for Chapters 1 to 49 inclusive. For the full text of procurement regulations in Chapters 1 to 49, consult the eleven CFR volumes issued as of July 1, 1984 containing those chapters.

[4] No amendments to this volume were promulgated during the period January 1, 2001, through January 1, 2002. The CFR volume issued as of January 1, 2001 should be retained.

[5] No amendments to this volume were promulgated during the period April 1, 2000, through April 1, 2001. The CFR volume issued as of April 1, 2000 should be retained.

[6] No amendments to this volume were promulgated during the period April 1, 2001, through April 1, 2002. The CFR volume issued as of April 1, 2001 should be retained.

[7] No amendments to this volume were promulgated during the period July 1, 2000, through July 1, 2001. The CFR volume issued as of July 1, 2000 should be retained.

[8] No amendments to this volume were promulgated during the period July 1, 2001, through July 1, 2002. The CFR volume issued as of July 1, 2001 should be retained.

[9] No amendments to this volume were promulgated during the period October 1, 2001, through October 1, 2002. The CFR volume issued as of October 1, 2001 should be retained.