AUTHENTICATED
U.S. GOVERNMENT
INFORMATION
GPO

Federal Register

11–6–02 Wednesday
Vol. 67 No. 215 Nov. 6, 2002
Pages 67509–67776

The **FEDERAL REGISTER** is published daily, Monday through Friday, except official holidays, by the Office of the Federal Register, National Archives and Records Administration, Washington, DC 20408, under the Federal Register Act (44 U.S.C. Ch. 15) and the regulations of the Administrative Committee of the Federal Register (1 CFR Ch. I). The Superintendent of Documents, U.S. Government Printing Office, Washington, DC 20402 is the exclusive distributor of the official edition.

The **Federal Register** provides a uniform system for making available to the public regulations and legal notices issued by Federal agencies. These include Presidential proclamations and Executive Orders, Federal agency documents having general applicability and legal effect, documents required to be published by act of Congress, and other Federal agency documents of public interest.

Documents are on file for public inspection in the Office of the Federal Register the day before they are published, unless the issuing agency requests earlier filing. For a list of documents currently on file for public inspection, see http://www.nara.gov/fedreg.

The seal of the National Archives and Records Administration authenticates the Federal Register as the official serial publication established under the Federal Register Act. Under 44 U.S.C. 1507, the contents of the **Federal Register** shall be judicially noticed.

The **Federal Register** is published in paper and on 24x microfiche. It is also available online at no charge as one of the databases on GPO Access, a service of the U.S. Government Printing Office.

The online edition of the **Federal Register** is issued under the authority of the Administrative Committee of the Federal Register as the official legal equivalent of the paper and microfiche editions (44 U.S.C. 4101 and 1 CFR 5.10). It is updated by 6 a.m. each day the **Federal Register** is published and it includes both text and graphics from Volume 59, Number 1 (January 2, 1994) forward.

GPO Access users can choose to retrieve online **Federal Register** documents as TEXT (ASCII text, graphics omitted), PDF (Adobe Portable Document Format, including full text and all graphics), or SUMMARY (abbreviated text) files. Users should carefully check retrieved material to ensure that documents were properly downloaded.

On the World Wide Web, connect to the **Federal Register** at http://www.access.gpo.gov/nara. Those without World Wide Web access can also connect with a local WAIS client, by Telnet to swais.access.gpo.gov, or by dialing (202) 512–1661 with a computer and modem. When using Telnet or modem, type swais, then log in as guest with no password.

For more information about GPO Access, contact the GPO Access User Support Team by E-mail at gpoaccess@gpo.gov; by fax at (202) 512–1262; or call (202) 512–1530 or 1–888–293–6498 (toll free) between 7 a.m. and 5 p.m. Eastern time, Monday–Friday, except Federal holidays.

The annual subscription price for the **Federal Register** paper edition is $699, or $764 for a combined **Federal Register, Federal Register** Index and List of CFR Sections Affected (LSA) subscription; the microfiche edition of the **Federal Register** including the **Federal Register** Index and LSA is $264. Six month subscriptions are available for one-half the annual rate. The charge for individual copies in paper form is $10.00 for each issue, or $10.00 for each group of pages as actually bound; or $2.00 for each issue in microfiche form. All prices include regular domestic postage and handling. International customers please add 25% for foreign handling. Remit check or money order, made payable to the Superintendent of Documents, or charge to your GPO Deposit Account, VISA, MasterCard or Discover. Mail to: New Orders, Superintendent of Documents, P.O. Box 371954, Pittsburgh, PA 15250–7954.

There are no restrictions on the republication of material appearing in the **Federal Register.**

How To Cite This Publication: Use the volume number and the page number. Example: 67 FR 12345.

SUBSCRIPTIONS AND COPIES

PUBLIC	
Subscriptions:	
Paper or fiche	**202–512–1800**
Assistance with public subscriptions	**202–512–1806**
General online information	**202–512–1530; 1–888–293–6498**
Single copies/back copies:	
Paper or fiche	**202–512–1800**
Assistance with public single copies	**1–866–512–1800 (Toll-Free)**
FEDERAL AGENCIES	
Subscriptions:	
Paper or fiche	**202–741–6005**
Assistance with Federal agency subscriptions	**202–741–6005**

What's NEW!

Federal Register Table of Contents via e-mail

Subscribe to FEDREGTOC, to receive the **Federal Register** Table of Contents in your e-mail every day.

If you get the HTML version, you can click directly to any document in the issue.

To subscribe, go to **http://listserv.access.gpo.gov** and select:

Online mailing list archives
FEDREGTOC-L
Join or leave the list

Then follow the instructions.

Printed on recycled paper.

Contents

Federal Register

Vol. 67, No. 215

Wednesday, November 6, 2002

Agriculture Department
See Animal and Plant Health Inspection Service
See Cooperative State Research, Education, and Extension Service
See Forest Service

Air Force Department
NOTICES
Environmental statements; notice of intent:
Johnston Atoll Airfield mission closure, 67606

Animal and Plant Health Inspection Service
RULES
Plant-related quarantine, domestic:
Gypsy moth, 67509–67510

Antitrust Division
NOTICES
National cooperative research notifications:
AAF Association, Inc., 67648
IMS Global Learning Consortium, Inc., 67648
J Consortium, Inc., 67648–67649
PKI Forum, Inc., 67649
Portland Cement Association, 67649
Rotorcraft Industry Technology Association, Inc., 67649–67650
Salutation Consortium, Inc., 67650
Southwest Research Institute, 67650
Zyvex, 67650

Arts and Humanities, National Foundation
See National Foundation on the Arts and the Humanities

Census Bureau
NOTICES
Surveys, determinations, etc.:
Retail trade; annual, 67601

Civil Rights Commission
NOTICES
Meetings; State advisory committees:
California, 67600
Vermont, 67600
Wyoming, 67600

Coast Guard
RULES
Drawbridge operations:
Illinois, 67551–67552
New Jersey, 67549–67551

Commerce Department
See Census Bureau
See International Trade Administration
See National Oceanic and Atmospheric Administration
See Patent and Trademark Office
NOTICES
Agency information collection activities:
Submission for OMB review; comment request, 67600–67601

Committee for the Implementation of Textile Agreements
NOTICES
Cotton, wool, and man-made textiles:
Pakistan, 67602–67603
Thailand, 67603–67604
Textile and apparel categories:
African Growth and Opportunity Act; short supply requests—
Handloomed fabrics and handmade articles, 67604

Cooperative State Research, Education, and Extension Service
NOTICES
Grants and cooperative agreements; availability, etc.:
Socially Disadvantaged Farmers and Ranchers Outreach and Assistance Program, 67587–67598

Customs Service
NOTICES
Customhouse broker license cancellation, suspension, etc.:
Arthur Andersen LLP, et al., 67688
General Shipping, Inc., 67688
Leschaco, Inc., 67688–67689
William F. Joffroy, Inc., et al., 67689

Defense Department
See Air Force Department
See Navy Department
PROPOSED RULES
Federal acquisition regulation (FAR):
Elimination of SF 129, solicitation mailing list application, 67761–67763
NOTICES
Civilian health and medical program of uniformed services (CHAMPUS):
TRICARE program—
Diagnosis related group updates FY 2003, 67604–67605
Meetings:
Defense Science Board, 67605–67606

Education Department
NOTICES
Agency information collection activities:
Submission for OMB review; comment request, 67606–67608

Employment and Training Administration
NOTICES
NAFTA transitional adjustment assistance:
CBO, 67652–67659

Energy Department
See Federal Energy Regulatory Commission

Environmental Protection Agency
RULES
Air quality implementation plans; approval and promulgation; various States:
Iowa, 67563–67566
Pesticides; tolerances in food, animal feeds, and raw agricultural commodities:
Diflubenzuron; correction, 67566–67567

PROPOSED RULES
Air programs:
Stratospheric ozone protection—
Essential use allowances allocation (2003 CY), 67581–67586
Air quality implementation plans; approval and promulgation; various States:
Iowa, 67580–67581
NOTICES
Agency information collection activities:
Submission for OMB review; comment request, 67615–67616
Air pollution control:
Citizen suits; proposed settlements—
Namco Metals, Inc., 67616
Grants and cooperative agreements; availability, etc.:
Brownfields Job Training Grant Application Guides, 67616–67617
Pesticide registration, cancellation, etc.:
Endosulfan, 67617–67619
Superfund; response and remedial actions, proposed settlements, etc.:
Kopper Charleston Site, SC, 67619

Executive Office of the President
See Presidential Documents

Federal Aviation Administration
RULES
Airworthiness directives:
Agusta S.p.A., 67510–67513
Bell Helicopter Textron Canada, 67513–67516
Boeing, 67518–67520
Eurocopter France, 67516–67518

Federal Communications Commission
RULES
Committees; establishment, renewal, termination, etc.:
Federal-State Joint Conference on Accounting Issues; membership, 67567–67568
Radio stations; table of assignments:
Mississippi, 67568
Ohio, 67568
NOTICES
Meetings:
Network Reliability and Interoperability Council, 67621
Technological Advisory Council, 67621–67622
Meetings; Sunshine Act, 67622
Applications, hearings, determinations, etc.:
Verizon Virginia, Inc., et al., 67619–67621

Federal Energy Regulatory Commission
RULES
Practice and procedure:
Accounting and reporting of financial instruments, comprehensive income, derivatives, and hedging activities, 67691–67739
NOTICES
Electric rate and corporate regulation filings:
Trans-Elect, Inc. et al., 67609–67610
Twelvepole Creek, LLC et al., 67610–67611
Hydroelectric applications, 67608–67615
Applications, hearings, determinations, etc.:
California Independent System Operator Corp. et al., 67609

Federal Maritime Commission
NOTICES
Agreements filed, etc., 67622
Ocean transportation intermediary licenses:
D.J. Powers International, Inc., et al., 67623
International Link Service Inc. et al., 67623
Rye Express Logistics, LLC et al., 67623

Federal Reserve System
NOTICES
Banks and bank holding companies:
Formations, acquisitions, and mergers, 67623–67624

Federal Retirement Thrift Investment Board
NOTICES
Meetings; Sunshine Act, 67624–67625

Federal Trade Commission
NOTICES
Agency information collection activities:
Submission for OMB review; comment request, 67625–67628

Federal Transit Administration
NOTICES
Environmental statements; availability, etc.:
Atlanta, GA—
Metropolitan Atlanta Transit Authority, 67682–67684
Weber County Regional Transportation Corridor Project, UT, 67684–67686

Fish and Wildlife Service
PROPOSED RULES
Endangered and threatened species:
Beluga sturgeon, 67586

Food and Drug Administration
RULES
Animal drugs, feeds, and related products:
Sponsor name and address changes—
Fort Dodge Animal Health, 67520–67521
PROPOSED RULES
Animal drugs, feeds, and related products:
Ruminant feed; animal proteins prohibition, 67572–67573
NOTICES
Debarment orders:
Fiddes, Robert A., 67628
Hernandez, Delfina, 67629
Medical devices:
Premarket approval applications, list; safety and effectiveness summaries availability, 67629–67631
Reports and guidance documents; availability, etc.:
Administrative new drug application process; industry guidance, 67631–67632

Forest Service
NOTICES
Environmental statements; notice of intent:
Gallatin National Forest, MT, 67598–67599
Meetings:
Resource Advisory Committees—
Columbia County, 67599–67600

General Services Administration
RULES
Federal Management Regulation:
Government aircraft, 67741–67760
PROPOSED RULES
Federal Acquisition Regulation (FAR):
Elimination of SF 129, solicitation mailing list application, 67761–67763

Health and Human Services Department
See Food and Drug Administration
See Health Resources and Services Administration
See National Institutes of Health

Health Resources and Services Administration
NOTICES
Senior Executive Service:
Performance Review Board; membership, 67632

Housing and Urban Development Department
RULES
Public and Indian housing:
Housing Choice Voucher Program—
Homeownership option; eligibility of public housing agency-owned or controlled units; correction, 67522
NOTICES
Agency information collection activities:
Proposed collection; comment request, 67637–67638
Submission for OMB review; comment request, 67638
Grant and cooperative agreement awards:
Alaska Native/Native Hawaiian Institutions Assisting Communities Program, 67638–67639
Dissertation Research Grant Program, 67639–67640
Early Doctoral Student Research Grant Program, 67640–67641
Historically Black Colleges and Universities Program, 67641–67642
Tribal Colleges and Universities Program, 67642

Immigration and Naturalization Service
NOTICES
Immigration:
Registration of nonimmigrant aliens from designated countries, 66765–66768

Interior Department
See Fish and Wildlife Service
See Land Management Bureau
See Minerals Management Service
See Surface Mining Reclamation and Enforcement Office

Internal Revenue Service
PROPOSED RULES
Procedure and administration:
User fees; compromise offer processing, 67573–67576

International Trade Administration
NOTICES
Antidumping:
Furfuryl alcohol from—
Thailand, 67601–67602

International Trade Commission
NOTICES
Import investigations:
Malleable iron pipe fittings from—
China, 67645–67646
Sulfanilic acid from—
Hungary and Portugal, 67646–67647

Justice Department
See Antitrust Division
See Immigration and Naturalization Service
See National Institute of Corrections
NOTICES
Pollution control; consent judgments:
American Standard, Inc. et al., 67647
Color Communications, Inc., 67647–67648

Labor Department
See Employment and Training Administration

Land Management Bureau
NOTICES
Meetings:
Resource Advisory Councils—
Eastern Washington, 67642–67643

Legal Services Corporation
NOTICES
Meetings; Sunshine Act, 67659–67661

Merit Systems Protection Board
NOTICES
Opportunity to file amicus briefs:
Ancheta, Vistacion v. Personnel Management Office, 67661–67662

Minerals Management Service
NOTICES
Agency information collection activities:
Proposed collection; comment request, 67643–67645
Meetings:
Minerals Management Advisory Board, 67645

National Aeronautics and Space Administration
PROPOSED RULES
Federal Acquisition Regulation (FAR):
Elimination of SF 129, solicitation mailing list application, 67761–67763

National Foundation on the Arts and the Humanities
NOTICES
Agency information collection activities:
Submission for OMB review; comment request, 67662–67663

National Highway Traffic Safety Administration
NOTICES
Motor vehicle safety standards:
Nonconforming vehicles—
Importation eligibility; determinations, 67686–67688

National Institute of Corrections
NOTICES
Grants and cooperative agreements; availability, etc.:
Effective Supervision of Women Defendants and Offenders in the Community, 67650–67652

National Institutes of Health
NOTICES
Agency information collection activities:
Proposed collection; comment request, 67632–67634
Meetings:
National Cancer Institute, 67634
National Heart, Lung, and Blood Institute, 67634
National Institute of Arthritis and Musculoskeletal and Skin Diseases, 67634–67635
National Institute of Environmental Health Sciences, 67635
National Institute of Mental Health, 67636
National Institute on Alcohol Abuse and Alcoholism, 67635–67636
Scientific Review Center, 67636–67637

National Oceanic and Atmospheric Administration
RULES
Fishery conservation and management:
Northeastern United States fisheries—
Monkfish, 67568–67571

Navy Department
NOTICES
Inventions, Government-owned; availability for licensing, 67606

Patent and Trademark Office
NOTICES
Senior Executive Service:
Performance Review Board; membership, 67602

Postal Rate Commission
RULES
Practice and procedure:
Electronic filing of documents over Internet, 67552–67563

Presidential Documents
PROCLAMATIONS
Special observances:
National Adoption Month (Proc. 7619), 67769–67772
National American Indian Heritage Month (Proc. 7620), 67773–67774
National Hospice Month (Proc. 7621), 67775–67776

Public Health Service
See Food and Drug Administration
See Health Resources and Services Administration
See National Institutes of Health

Securities and Exchange Commission
NOTICES
Agency information collection activities:
Proposed collection; comment request, 67663–67665
Meetings; Sunshine Act, 67665–67666
Self-regulatory organizations; proposed rule changes:
American Stock Exchange LLC, 67666–67673
Chicago Board Options Exchange, Inc., 67673–67676
National Association of Securities Dealers, Inc., 67676–67680
New York Stock Exchange, Inc., 67680–67681

State Department
NOTICES
Meetings:
International Telecommunications Advisory Committee, 67682
Private International Law Advisory Committee, 67682

Surface Mining Reclamation and Enforcement Office
RULES
Permanent program and abandoned mine land reclamation plan submissions:
Iowa, 67522–67524
Kentucky, 67524–67528
Pennsylvania, 67528–67531
Texas, 67531–67534
Utah, 67534–67540
Wyoming, 67540–67547
PROPOSED RULES
Permanent program and abandoned mine land reclamation plan submissions:
West Virginia, 67576–67580

Surface Transportation Board
NOTICES
Railroad operation, acquisition, construction, etc.:
Norfolk Southern Railway Co., 67688

Textile Agreements Implementation Committee
See Committee for the Implementation of Textile Agreements

Transportation Department
See Coast Guard
See Federal Aviation Administration
See Federal Transit Administration
See National Highway Traffic Safety Administration
See Surface Transportation Board

Treasury Department
See Customs Service
See Internal Revenue Service
RULES
Currency and foreign transactions; financial reporting and recordkeeping requirements:
USA PATRIOT Act; implementation—
Anti-money laundering programs for financial institutions, 67547–67549

United States Institute of Peace
NOTICES
Meetings; Sunshine Act, 67689

Separate Parts In This Issue

Part II
Energy Department, Federal Energy Regulatory Commission, 67691–67739

Part III
General Services Administration, 67741–67760

Part IV
Defense Department; General Services Administration; National Aeronautics and Space Administration, 67761–67763

Part V
Justice Department, Immigration and Naturalization Service, 66765–66768

Part VI
Executive Office of the President, Presidential Documents, 67769–67776

Reader Aids
Consult the Reader Aids section at the end of this issue for phone numbers, online resources, finding aids, reminders, and notice of recently enacted public laws.

To subscribe to the Federal Register Table of Contents LISTSERV electronic mailing list, go to http://listserv.access.gpo.gov and select Online mailing list archives, FEDREGTOC-L, Join or leave the list (or change settings); then follow the instructions.

CFR PARTS AFFECTED IN THIS ISSUE

A cumulative list of the parts affected this month can be found in the Reader Aids section at the end of this issue.

3 CFR

Proclamations:

7619 67771
7620 67773
7621 67775

7 CFR

301 67509

14 CFR

39 (4 documents) 67510, 67513, 67516, 67518

18 CFR

101 67692
201 67692
352 67692

21 CFR

510 (2 documents) 67520, 67521
520 67521
522 67521
524 67521

Proposed Rules:

589 67572

24 CFR

982 67522

26 CFR

Proposed Rules:

300 67573

30 CFR

915 67522
917 67524
938 67528
943 67531
944 67534
950 67540

Proposed Rules:

948 67576

31 CFR

103 67547

33 CFR

117 (2 documents) 67549, 67551

39 CFR

3001 67552

40 CFR

52 67563
180 67566

Proposed Rules:

52 67580
82 67581

41 CFR

101-37 67742
102-33 67742

47 CFR

1 67567
73 (2 documents) 67568

48 CFR

Proposed Rules:

1 67762
5 67762
14 67762
19 67762
22 67762
36 67762
52 67762
53 67762

50 CFR

648 67568

Proposed Rules:

17 67586

Rules and Regulations

Federal Register
Vol. 67, No. 215
Wednesday, November 6, 2002

This section of the FEDERAL REGISTER contains regulatory documents having general applicability and legal effect, most of which are keyed to and codified in the Code of Federal Regulations, which is published under 50 titles pursuant to 44 U.S.C. 1510.

The Code of Federal Regulations is sold by the Superintendent of Documents. Prices of new books are listed in the first FEDERAL REGISTER issue of each week.

DEPARTMENT OF AGRICULTURE

Animal and Plant Health Inspection Service

7 CFR Part 301

[Docket No. 02–053–2]

Gypsy Moth Generally Infested Areas

AGENCY: Animal and Plant Health Inspection Service, USDA.

ACTION: Affirmation of interim rule as final rule.

SUMMARY: We are adopting as a final rule, without change, an interim rule that amended the regulations by adding nine counties in Wisconsin to the list of generally infested areas based on the detection of infestations of gypsy moth in those counties. As a result of the interim rule, the interstate movement of regulated articles from those areas is restricted. The interim rule was necessary to prevent the artificial spread of gypsy moth to noninfested States.

EFFECTIVE DATE: The interim rule became effective on June 20, 2002.

FOR FURTHER INFORMATION CONTACT: Dr. Weyman P. Fussell, Program Manager, Invasive Species and Pest Management, PPQ, APHIS, 4700 River Road Unit 134, Riverdale, MD 20737–1236; (301) 734–5705.

SUPPLEMENTARY INFORMATION:

Background

The gypsy moth, *Lymantria dispar* (Linnaeus), is a destructive pest of forest and shade trees. The gypsy moth regulations (contained in 7 CFR 301.45 through 301.45–12 and referred to below as the regulations) restrict the interstate movement of regulated articles from generally infested areas to prevent the artificial spread of the gypsy moth.

In an interim rule effective and published in the **Federal Register** on June 20, 2002 (67 FR 41809–41810, Docket No. 02–053–1), we amended the regulations in § 301.45–3 by adding Columbia, Florence, Forest, Green Lake, Jefferson, Langlade, Portage, Rock, and Wood Counties in Wisconsin to the list of generally infested areas based on the detection of infestations of gypsy moth in those counties.

Comments on the interim rule were required to be received on or before August 19, 2002. We did not receive any comments. Therefore, for the reasons given in the interim rule, we are adopting the interim rule as a final rule.

This action also affirms the information contained in the interim rule concerning Executive Orders 12866, 12372, and 12988, and the Paperwork Reduction Act.

Further, for this action, the Office of Management and Budget has waived its review under Executive Order 12866.

Regulatory Flexibility Act

This rule affirms an interim rule that amended the regulations by adding nine counties in Wisconsin to the list of generally infested areas. As a result of the interim rule, the interstate movement of certain articles from those areas is restricted. The interim rule was necessary to prevent the artificial spread of the gypsy moth to noninfested States. The following analysis addresses the economic effects of the interim rule on small entities, as required by the Regulatory Flexibility Act.

The interim rule placed restrictions on the interstate movement of regulated articles and outdoor household articles (OHA's) from and through those counties in Wisconsin that were designated as generally infested areas. These restrictions will have their primary effect on persons moving OHA's, nursery stock, Christmas trees, logs and wood chips, and mobile homes interstate from a generally infested area into or through any area that is not generally infested.

Under the regulations, OHA's may not be moved interstate from a generally infested area into or through a noninfested area unless they are accompanied by either a certificate issued by an inspector or an OHA document issued by the owner of the articles, attesting to the absence of all life stages of the gypsy moth. Most individual homeowners moving their own articles who comply with the regulations choose to self-inspect and issue an OHA document. This takes a few minutes and involves no monetary cost. Individuals may also have State-certified pesticide applicators, trained by the State or the U.S. Department of Agriculture (USDA), inspect and issue certificates.

Generally, regulated articles (such as logs, pulpwood, wood chips, mobile homes, nursery stock, OHAs, and Christmas trees) may only be moved interstate from a generally infested area if they are accompanied by a certificate or limited permit issued by an inspector. However, logs, wood chips, and pulpwood may be moved without a certificate or limited permit if the person moving the articles attaches a signed accurate statement to the waybill as specified in the Gypsy Moth Program Manual, stating that he or she has inspected the articles and has found them free of all life stages of the gypsy moth. This exception minimizes the costs of moving logs, pulpwood, and wood chips interstate. Regulated articles may also be moved interstate from a generally infested area without a certificate if they are moved by the USDA for experimental or scientific purposes and they are accompanied by a permit issued by the Administrator of the Animal and Plant Health Inspection Service (APHIS).

Persons moving regulated articles interstate from a generally infested area may obtain a certificate or limited permit from an inspector or a qualified certified applicator. Inspectors will issue these documents at no charge, but costs may result from delaying the movement of commercial articles while waiting for the inspection. Certificates for the interstate movement of mobile homes from a generally infested area may also be obtained from qualified certified applicators.

When inspection of regulated articles or OHA's reveals the presence of gypsy moths, treatment is often necessary. The preferred treatment, scraping egg masses and spraying caterpillars, costs an average of $10 to $30 per shipment. Fumigation is another alternative, but it is more expensive, at $75 to $100 per shipment, and may damage the shipment. Treatment is done by qualified certified applicators, most of which are small businesses. These businesses might experience a small increase in income as a result of the interim rule.

Nurseries and Christmas tree growers that move a substantial number of shipments interstate from the generally infested areas would be able to minimize treatment costs by treating their premises for gypsy moths under a compliance agreement with APHIS. These treatments cost businesses between $10 and $20 per acre. This alternative allows nurseries and Christmas tree growers to issue their own certificates provided they are under a compliance agreement and is less costly than treating individual shipments. The entities most likely to choose this option are nurseries that move a substantial number of shipments interstate and treat their premises for other pests in addition to the gypsy moth. Producers that do not operate under a compliance agreement with APHIS, but treat their premises under this option, would receive certification for each shipment from an inspector.

The economic effects of the interim rule will likely vary, depending on the size of the entities affected, the levels of infestation, and the size and number of shipments to noninfested areas. There are approximately 146 nurseries and Christmas tree growers that will incur costs from the interim rule in eight of the nine counties added to the list of generally infested areas (data are not available for Florence County). According to the size standards established by the Small Business Administration, all of these businesses are considered small entities. No information is available concerning the percentage of shipments moved by those entities into or through noninfested areas. Data on shipments of regulated articles from other generally infested areas in Wisconsin indicate that few shipments are moved from those areas into or through noninfested areas. If this pattern holds, little or no additional costs would be incurred by many of the 146 establishments as a result of the interim rule.

The regulatory requirements imposed by the interim rule are expected to cause a slight increase in costs for the affected entities. The relative negative impact that may result from the interim rule is very small when compared with the potential for harm to related industry and the U.S. economy as a whole resulting from the further spread of the pest. Since the total value of the regulated articles moved from infested to noninfested areas is a small fraction of the national total, the effect on national prices is expected to be slight. Additionally, since the rule is not prohibitive, articles that meet the requirements of the regulations would continue to enter the market. Therefore, the overall impact upon price and competitiveness is expected to be relatively insignificant.

Under these circumstances, the Administrator of the Animal and Plant Health Inspection Service has determined that this action will not have a significant impact on a substantial number of small entities.

List of Subjects in 7 CFR Part 301

Agricultural commodities, Plant diseases and pests, Quarantine, Reporting and recordkeeping requirements, Transportation.

PART 301—DOMESTIC QUARANTINE NOTICES

Accordingly, we are adopting as a final rule, without change, the interim rule that amended 7 CFR part 301 and that was published at 67 FR 41809–41810 on June 20, 2002.

Authority: 7 U.S.C. 166, 7711, 7712, 7714, 7731, 7735, 7751, 7752, 7753, and 7754; 7 CFR 2.22, 2.80, and 371.3.

Section 301.75–15 also issued under Sec. 204, Title II, Pub. L. 106–113, 113 Stat. 1501A–293; sections 301.75–15 and 301.75–16 also issued under Sec. 203, Title II, Pub. L. 106–224, 114 Stat. 400 (7 U.S.C. 1421 note).

Done in Washington, DC, this 31st day of October 2002.

Bobby R. Acord,

Administrator, Animal and Plant Health Inspection Service.

[FR Doc. 02–28157 Filed 11–5–02; 8:45 am]

BILLING CODE 3410–34–P

DEPARTMENT OF TRANSPORTATION

Federal Aviation Administration

14 CFR Part 39

[Docket No. 2002–SW–42–AD; Amendment 39–12936; AD 2002–17–51]

RIN 2120–AA64

Airworthiness Directives; Agusta S.p.A. Model A109E Helicopters

AGENCY: Federal Aviation Administration, DOT.

ACTION: Final rule; request for comments.

SUMMARY: This document publishes in the **Federal Register** an amendment adopting Airworthiness Directive (AD) 2002–17–51, which was sent previously to all known U.S. owners and operators of Agusta S.p.A. (Agusta) helicopters by individual letters. This AD requires installing a placard in the helicopter and marking the airspeed indication at 140 knots indicated airspeed (KIAS) to indicate a reduction in the helicopter never-exceed speed (Vne) of 28 KIAS; visually checking the tail roter blades on both sides for a crack before each start of the helicopter engines; visually inspecting the tail rotor blades with a 5x or higher magnifying glass at certain time intervals and anytime an increase in vibration occurs, and conducting a dye-penetrant inspection if necessary; and replacing any cracked tail rotor blade with an airworthy tail roter blade. The actions specified by this AD are intended to prevent failure of the tail roter blade and subsequent loss of control of the helicopter.

EFFECTIVE DATE: Effective November 21, 2002, to all persons except those persons to whom it was made immediately effective by Emergency AD 2002–17–51, issued on August 19, 2002, which contained the requirements of this amendment.

The incorporation by reference of certain publications listed in the regulations is approved by the Director of the Federal Register as of November 21, 2002.

Comments for inclusion in the Rules Docket must be received on or before January 6, 2003.

ADDRESSES: Submit comments in triplicate to the Federal Aviation Administration (FAA), Office of the Regional Counsel, Southwest Region, Attention: Rules Docket No. 2002–SW–42–AD, 2601 Meacham Blvd., Room 663, Fort Worth, Texas 76137. You may also send comments electronically to the Rules Docket at the following address: *9-asw-adcomments@faa.gov.*

The applicable service information may be obtained from Agusta, 21017 Cascina Costa di Samarate (VA) Italy, Via Giovanni Agusta 520, telephone 39 (0331) 229111, fax 39 (0331) 229605–222595. This information may be examined at the FAA, Office of the Regional Counsel, Southwest Region, 2601 Meacham Blvd., Room 663, Fort Worth, Texas; or at the Office of the Federal Register, 800 North Capitol Street, NW., suite 700, Washington, DC.

FOR FURTHER INFORMATION CONTACT: Jim Grigg, Aviation Safety Engineer, FAA, Rotorcraft Directorate, Rotorcraft Standards Staff, Fort Worth, Texas 76193–0110, telephone (817) 222–5490, fax (817) 222–5961.

SUPPLEMENTARY INFORMATION: On July 9, 2002, the FAA issued Emergency AD 2002–14–51, Docket 2002–SW–35–AD, which applied to Agusta Model A109E and A119 helicopters. That AD required, before each flight, visually checking each tail rotor blade on both sides for a crack. That AD also required, within 5 hours TIS and thereafter at

intervals not to exceed 5 hours TIS, inspecting each tail rotor blade for a crack with a 5x or higher magnifying glass. If you were unable to determine by the visual inspection whether there was a crack, the AD required conducting a dye-penetrant inspection. Replacing any cracked tail rotor blade with an airworthy blade was also required before further flight. After issuance of that Emergency AD, the manufacturer determined, and we agreed, that reducing the Vne by 28 KIAS to 140 KIAS is necessary to reduce the tail rotor loading. The reduction in Vne supports the increase in the visual inspection interval from 5 hours TIS to 25 hours TIS. Further, we have determined that additional modifications are necessary for the Agusta Model A119 helicopters that are not required for the Model A109E helicopters, so on August 19, 2002, we superseded AD 2002–14–51 and issued a separate Emergency AD for each model. Emergency AD 2002–17–51, applicable to August Model A109E helicopters, requires reducing the helicopter Vne; checking and inspecting the tail rotor blades for cracks; and replacing any cracked tail rotor blades.

The FAA has reviewed Agusta Alert Bolletino Tecnico No. 109EP–30, Revision A, dated July 25, 2002 (BT), which describes procedures for checking and inspecting both sides of the tail rotor blades, part number (P/N) 109–8132–01–111, for a crack and reducing the helicopter Vne. The Ente Nazionale per l'Aviazione Civile, the airworthiness authority for Italy, classified the BT as mandatory and issued AD No. 2002–384, dated July 29, 2002, to ensure the continued airworthiness of this helicopter in Italy.

Since the unsafe condition described is likely to exist or develop on other Agusta Model A109E helicopters of the same type design, the FAA issued Emergency AD 2002–17–51 to prevent failure of the tail rotor blade and subsequent loss of control of the helicopter. The AD requires:

- Installing a placard in the helicopter and marking the airspeed indication at 140 KIAS to indicate a reduction in the helicopter Vne of 28 KIAS before further flight;
- Visually checking the tail rotor blades on both sides for a crack before each start of the helicopter engines;
- Visually inspecting the tail rotor blades with a 5× or higher magnifying glass within 25 hours TIS and thereafter at intervals not to exceed 25 hours TIS, and anytime an increase in vibration occurs, and conducting a dye-penetrant inspection if you are unable to determine by the visual inspection whether or not there is a crack; and
- Replacing any cracked tail rotor blade with an airworthy tail rotor blade before further flight.

The actions must be accomplished in accordance with the BT described previously. The short compliance time involved is required because the previously described critical unsafe condition can adversely affect the controllability of the helicopter. Therefore, reducing the helicopter Vne; performing checks and inspections of the tail rotor blades for cracks; and replacing any cracked tail rotor blades are required before further flight, and this AD must be issued immediately.

Since it was found that immediate corrective action was required, notice and opportunity for prior public comment thereon were impracticable and contrary to the public interest, and good cause existed to make the AD effective immediately by individual letters issued on August 19, 2002, to all known U.S. owners and operators of Agusta Model A109E helicopters. These conditions still exist, and the AD is hereby published in the **Federal Register** as an amendment to 14 CFR 39.13 to make it effective to all persons.

The FAA estimates that 48 helicopters of U.S. registry will be affected by this AD, that it will take approximately 0.5 work hour per helicopter to accomplish the visual inspection, 1 work hour per helicopter to accomplish the dye-penetrant inspection, and 1 work hour per helicopter to replace the tail rotor blade, if necessary. The average labor rate is $60 per work hour. Required parts will cost approximately $9,765 per tail rotor blade. Based on these figures, the total cost impact of the AD on U.S. operators is estimated to be $506,160 per year, assuming, for each helicopter, 24 visual inspections, 1 tail rotor blade replacement, and no dye-penetrant inspections. The manufacturer states in its BT that they will provide the replacement blades at no cost to the owner/operator.

Comments Invited

Although this action is in the form of a final rule that involves requirements affecting flight safety and, thus, was not preceded by notice and an opportunity for public comment, comments are invited on this rule. Interested persons are invited to comment on this rule by submitting such written data, views, or arguments as they may desire. Communications should identify the Rules Docket number and be submitted in triplicate to the address specified under the caption **ADDRESSES.** All communications received on or before the closing date for comments will be considered, and this rule may be amended in light of the comments received. Factual information that supports the commenter's ideas and suggestions is extremely helpful in evaluating the effectiveness of the AD action and determining whether additional rulemaking action would be needed.

Comments are specifically invited on the overall regulatory, economic, environmental, and energy aspects of the rule that might suggest a need to modify the rule. All comments submitted will be available in the Rules Docket for examination by interested persons. A report that summarizes each FAA-public contact concerned with the substance of this AD will be filed in the Rules Docket.

Commenters wishing the FAA to acknowledge receipt of their mailed comments submitted in response to this rule must submit a self-addressed, stamped postcard on which the following statement is made: ''Comments to Docket No. 2002–SW–42–AD.'' The postcard will be date stamped and returned to the commenter.

The regulations adopted herein will not have a substantial direct effect on the States, on the relationship between the national Government and the States, or on the distribution of power and responsibilities among the various levels of government. Therefore, it is determined that this final rule does not have federalism implications under Executive Order 13132.

The FAA has determined that this regulation is an emergency regulation that must be issued immediately to correct an unsafe condition in aircraft, and that it is not a ''significant regulatory action'' under Executive Order 12866. It has been determined further that this action involves an emergency regulation under DOT Regulatory Policies and Procedures (44 FR 11034, February 26, 1979). If it is determined that this emergency regulation otherwise would be significant under DOT Regulatory Policies and Procedures, a final regulatory evaluation will be prepared and placed in the Rules Docket. A copy of it, if filed, may be obtained from the Rules Docket at the location provided under the caption **ADDRESSES.**

List of Subjects in 14 CFR Part 39

Air transportation, Aircraft, Aviation safety, Incorporation by reference, Safety.

Adoption of the Amendment

Accordingly, pursuant to the authority delegated to me by the Administrator, the Federal Aviation Administration amends part 39 of the Federal Aviation Regulations (14 CFR part 39) as follows:

PART 39—AIRWORTHINESS DIRECTIVES

1. The authority citation for part 39 continues to read as follows:

Authority: 49 U.S.C. 106(g), 40113, 44701.

§ 39.13 [Amended]

2. Section 39.13 is amended by adding a new airworthiness directive to read as follows:

2002–17–51 Augusta S.p.A.: Amendment 39–12936. Docket No. 2002–SW–42–AD. Supersedes Emergency AD 2002–14–51, Docket No. 2002–SW–35–AD.

Applicability: Model A109E helicopters, with tail rotor blade, part number 109–8132–01–111, installed, certificated in any category.

Note 1: This AD applies to each helicopter identified in the preceding applicability provision, regardless of whether it has been otherwise modified, altered, or repaired in the area subject to the requirements of this AD. For helicopters that have been modified, altered, or repaired so that the performance of the requirements of this AD is affected, the owner/operator must request approval for an alternative method of compliance in accordance with paragraph (e) of this AD. The request should include an assessment of the effect of the modification, alteration, or repair on the unsafe condition addressed by this AD; and if the unsafe condition has not been eliminated, the request should include specific proposed actions to address it.

Compliance: Required as indicated, unless accomplished previously.

To prevent failure of the tail rotor blade and subsequent loss of control of the helicopter, accomplish the following:

(a) Before further flight, install a placard in the helicopter and mark the airspeed indicator at 140 knots indicated airspeed (KIAS) to indicate a reduction in the helicopter never exceed speed (Vne) of 28 KIAS in accordance with the Compliance Instructions, Part I, of Agusta Alert Bollettino Tecnico No. 109EP–30, Revision A, dated July 25, 2002 (BT).

(b) Before each start of the helicopter engines, visually check both sides of each tail rotor blade for a crack in the area depicted in Figure 1 of this AD. And owner/operator (pilot) holding at least a private pilot certificate may perform this visual check and must enter compliance with this paragraph into the aircraft maintenance records in accordance with 14 CFR 43.11 and 91.417(d)(2)(v). See Figure 1:

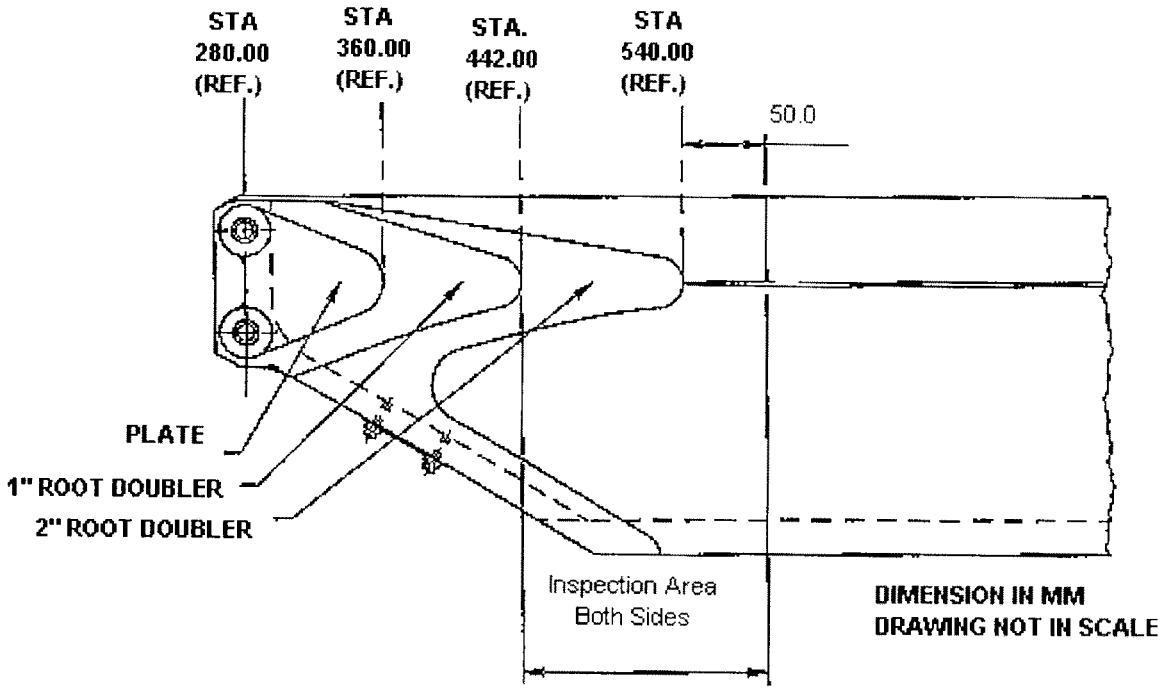

Part Number 109-8132-01-111 Tail Rotor Blade

FIGURE 1

Note 2: Paint irregularities on the tail rotor blade may be due to a crack.

(c) Within 25 hours time-in-service (TIS), and thereafter at intervals not to exceed 25 hours TIS, and anytime there is an increase in vibration levels, using a 5x or higher magnifying glass, visually inspect each tail rotor blade for a crack before further flight in accordance with the Compliance Instructions, Part III, paragraphs 1. through 5., of the BT. Reporting to Agusta Service Engineering is not required. If you are unable to determine by the visual inspection whether there is a crack, dye penetrant inspect the tail rotor blade for a crack in accordance with the Compliance Instructions, Part III, paragraph 6., of the BT.

(d) Replace any cracked tail rotor blade with an airworthy blade before further flight.

(e) An alternative method of compliance or adjustment of the compliance time that provides an acceptable level of safety may be used if approved by the Manager, Regulations Group, Rotorcraft Directorate, FAA. Operators shall submit their requests through an FAA Principal Maintenance Inspector, who may concur or comment and then send it to the Manager, Regulations Group.

Note 3: Information concerning the existence of approved alternative methods of

compliance with this AD, if any, may be obtained from the Regulations Group.

(f) Special flight permits will not be issued.

(g) Installing the placard and inspecting for cracks shall be done in accordance with the Compliance Instructions, Part I and Part III, paragraphs 1 through 6, of Agusta Alert Bollettino Tecnico No. 109EP–30, Revision A, dated July 25, 2002. This incorporation by reference was approved by the Director of the Federal Register in accordance with 5 U.S.C. 552(a) and 1 CFR part 51. Copies may be obtained from Agusta, 21017 Cascina Costa di Samarate (VA) Italy, Via Giovanni Agusta 520, telephone 39 (0331) 229111, fax 39 (0331) 229605–222595. Copies may be inspected at the FAA, Office of the Regional Counsel, Southwest Region, 2601 Meacham Blvd., Room 663, Fort Worth, Texas 76137; or at the Office of the Federal Register, 800 North Capitol Street, NW., suite 700, Washington, DC.

(h) This amendment becomes effective on November 21, 2002, to all persons except those persons to whom it was made immediately effective by Emergency AD 2002–17–51, issued August 19, 2002, which contained the requirements of this amendment.

Note 4: The subject of this AD is addressed in Ente Nazionale per l'Aviazione Civile (Italy) AD No. 2002–384, dated July 29, 2002.

Issued in Fort Worth, Texas, on October 17, 2002.

David A. Downey,

Manager, Rotorcraft Directorate, Aircraft Certification Service.

[FR Doc. 02–27792 Filed 11–5–02; 8:45 am]

BILLING CODE 4910–13–M

DEPARTMENT OF TRANSPORTATION

Federal Aviation Administration

14 CFR Part 39

[Docket No. 2002–SW–38–AD; Amendment 39–12935; AD 2002–22–10]

RIN 2120–AA64

Airworthiness Directives; Bell Helicopter Textron Canada Limited Model 407 Helicopters

AGENCY: Federal Aviation Administration, DOT.

ACTION: Final rule; request for comments.

SUMMARY: This amendment supersedes an existing airworthiness directive (AD) for Bell Helicopter Textron Canada Limited (BHTCL) Model 407 helicopters that requires visually inspecting the brackets that attach the horizontal stabilizer slat (slat) to the stabilizer for a crack. If a crack is found, that AD also requires replacing the slat assembly before further flight. Also, that AD requires installing airworthy, segmented slat assemblies by a specified date. Installing segmented slat assemblies was considered terminating action for the requirements of that AD. This amendment requires, initially and at certain time intervals, checking each slat assembly for a cracked bracket and, if a crack is found, replacing any unairworthy slat assembly with an improved, airworthy slat assembly. This amendment also requires replacing, modifying, and installing identification plates on slats on certain helicopters at specified time intervals. This amendment is prompted by two additional reports of cracked brackets. The actions specified by this AD are intended to prevent a slat from separating, contacting a rotor blade, and resulting in subsequent loss of control of the helicopter.

DATES: Effective November 21, 2002.

The incorporation by reference of certain publications listed in the regulations is approved by the Director of the Federal Register as of November 21, 2002.

Comments for inclusion in the Rules Docket must be received on or before January 6, 2003.

ADDRESSES: Submit comments in triplicate to the Federal Aviation Administration (FAA), Office of the Regional Counsel, Southwest Region, Attention: Rules Docket No. 2002–SW–38–AD, 2601 Meacham Blvd., Room 663, Fort Worth, Texas 76137. You may also send comments electronically to the Rules Docket at the following address: *9-asw-adcomments@faa.gov.*

The service information referenced in this AD may be obtained from Bell Helicopter Textron Canada Limited, 12,800 Rue de l'Avenir, Mirabel, Quebec J7J1R4, telephone (450) 437–2862 or (800) 363–8023, fax (450) 433–0272. This information may be examined at the FAA, Office of the Regional Counsel, Southwest Region, 2601 Meacham Blvd., Room 663, Fort Worth, Texas 76137; or at the Office of the Federal Register, 800 North Capitol Street, NW., suite 700, Washington, DC.

FOR FURTHER INFORMATION CONTACT: Sharon Miles, Aviation Safety Engineer, FAA, Rotorcraft Directorate, Regulations Group, Fort Worth, Texas 76193–0111, telephone (817) 222–5122, fax (817) 222–5961.

SUPPLEMENTARY INFORMATION: On September 29, 2000, the FAA issued AD 2000–20–18, Amendment 39–11930 (65 FR 62275, October 18, 2000), to require visually inspecting certain slat brackets for a crack and replacing any slat assembly that has a cracked bracket. Also, AD 2000–20–18 required installing a newly designed slat assembly on each affected model before flight after December 31, 2000. That action was prompted by an incident in which a slat separated from a helicopter. That condition, if not corrected, could result in a slat separating, contacting a rotor blade, and subsequent loss of control of the helicopter.

Since issuing that AD and since installing the newly designed slat assembly, part number (P/N) 407–023–001–101 on affected helicopters, two additional cracked slat brackets have been reported. These occurrences are attributed to a design flaw and improper installation of the slat assembly.

Bell Helicopter Textron has issued Alert Service Bulletin No. 407–02–52, dated March 20, 2002 (ASB). The ASB specifies checking the slats for a crack in the bracket on certain serial-numbered helicopters and replacing the existing slat assembly with a further improved, airworthy, slat assembly on another serial-numbered group of helicopters. The ASB also specifies modifying certain existing slat assemblies for another group of serial-numbered helicopters and installing and marking identification plates after the segmented slat assemblies are installed on certain other helicopters. Transport Canada classified this ASB as mandatory and issued AD CF–2000–09R1, dated June 6, 2002, to ensure the continued airworthiness of these helicopters in Canada.

This helicopter model is manufactured in Canada and is type certificated for operation in the United States under the provisions of 14 CFR 21.29 and the applicable bilateral agreement. Pursuant to the applicable bilateral agreement, Transport Canada has kept the FAA informed of the situation described above. The FAA has examined the findings of Transport Canada, reviewed all available information, and determined that AD action is necessary for products of this type design that are certificated for operation in the United States.

This unsafe condition is likely to exist or develop on other BHTCL Model 407 helicopters of the same type design. Therefore, this AD supersedes AD 2000–20–18 and requires the following:

- Within 10 hours time-in-service (TIS) and thereafter before the first flight of each day:
- For helicopters serial number (S/N) 53000 through 53498 and 53500 through 53503, check each slat for a crack at the radius of each bracket, P/N 206–023–119–109, –110, or 407–023–801–127, –128, or 407–023–011–119, –120, or –121. An owner/operator (pilot) holding at least a private pilot certificate may perform this check. The pilot must enter compliance with this provision in

accordance with 14 CFR 43.11 and 91.417(a)(2)(v). A pilot may perform this check because it involves only a visual check for a crack in the bracket for the slat and can be performed equally well by a pilot or a mechanic.

• If a crack is found, before further flight, replace slat assembly, P/N 407–023–002–117 or 407–023–001–101 with an airworthy, segmented slat assembly, P/N 407–023–001–103.

• Replacing slat assembly, P/N 407–023–002–117 or 407–023–001–101, with an airworthy, segmented slat assembly, P/N 407–023–001–103, is terminating action for the pilot check.

• Within 300 hours TIS, but not later than December 31, 2002, for helicopters:

• S/N 53000 through 53498, replace slat assembly, P/N 407–023–002–117 and 407–023–001–101, with an airworthy, segmented slat assembly, P/N 407–023–001–103.

• S/N 53500 through 53503, modify each segmented slat assembly, P/N 407–023–001–103.

• S/N 53504 through 53512, install and mark identification plates for each segmented slat assembly, P/N 407–023–001–103.

The actions must be accomplished in accordance with the ASB described previously. The short compliance time involved is required because the previously described critical unsafe condition can adversely affect the structural integrity and controllability of the helicopter. Therefore, checking a certain group of slats for a crack at the radius of each bracket is required before the first flight of each day and must be replaced before December 31, 2002. Thus, this AD must be issued immediately.

Since a situation exists that requires the immediate adoption of this regulation, it is found that notice and opportunity for prior public comment hereon are impracticable, and that good cause exists for making this amendment effective in less than 30 days.

The FAA estimates that this AD will affect 289 helicopters and will require approximately:

• 3.5 work hours to replace the slat assembly for 280 helicopters;

• 3.5 work hours to reinstall the slat assembly for 4 helicopters;

• ¾ work hour to install and mark the ID plates for 9 helicopters;

• An average labor rate of $60 per work hour; and

• $5,657 for parts per helicopter. The manufacturer states that a 100 percent warranty credit is available for replacing the slat assembly if various conditions are met. Based on these figures, the total cost impact of the AD on U.S. operators is estimated to be $1,644,005.

Comments Invited

Although this action is in the form of a final rule that involves requirements affecting flight safety and, thus, was not preceded by notice and an opportunity for public comment, comments are invited on this rule. Interested persons are invited to comment on this rule by submitting such written data, views, or arguments as they may desire. Communications should identify the Rules Docket number and be submitted in triplicate to the address specified under the caption **ADDRESSES**. All communications received on or before the closing date for comments will be considered, and this rule may be amended in light of the comments received. Factual information that supports the commenter's ideas and suggestions is extremely helpful in evaluating the effectiveness of the AD action and determining whether additional rulemaking action would be needed.

Comments are specifically invited on the overall regulatory, economic, environmental, and energy aspects of the rule that might suggest a need to modify the rule. All comments submitted will be available in the Rules Docket for examination by interested persons. A report that summarizes each FAA-public contact concerned with the substance of this AD will be filed in the Rules Docket.

Commenters wishing the FAA to acknowledge receipt of their comments submitted in response to this rule must submit a self-addressed, stamped postcard on which the following statement is made: ''Comments to Docket No. 2002–SW–38–AD.'' The postcard will be date stamped and returned to the commenter.

The regulations adopted herein will not have a substantial direct effect on the States, on the relationship between the national Government and the States, or on the distribution of power and responsibilities among the various levels of government. Therefore, it is determined that this final rule does not have federalism implications under Executive Order 13132.

The FAA has determined that this regulation is an emergency regulation that must be issued immediately to correct an unsafe condition in aircraft, and that it is not a ''significant regulatory action'' under Executive Order 12866. It has been determined further that this action involves an emergency regulation under DOT Regulatory Policies and Procedures (44 FR 11034, February 26, 1979). If it is determined that this emergency regulation otherwise would be significant under DOT Regulatory Policies and Procedures, a final regulatory evaluation will be prepared and placed in the Rules Docket. A copy of it, if filed, may be obtained from the Rules Docket at the location provided under the caption **ADDRESSES**.

List of Subjects in 14 CFR Part 39

Air transportation, Aircraft, Aviation safety, Incorporation by reference, Safety.

Adoption of the Amendment

Accordingly, pursuant to the authority delegated to me by the Administrator, the Federal Aviation Administration amends part 39 of the Federal Aviation Regulations (14 CFR part 39) as follows:

PART 39—AIRWORTHINESS DIRECTIVES

1. The authority citation for part 39 continues to read as follows:

Authority: 49 U.S.C. 106(g), 40113, 44701.

§ 39.13 [Amended]

2. Section 39.13 is amended by removing Amendment 39–11930 (65 FR 62275, October 18, 2000), and by adding a new airworthiness directive (AD), Amendment 39–12935, to read as follows:

2002–22–10 Bell Helicopter Textron Canada Limited: Amendment 39–12935. Docket No. 2002–SW–38–AD. Supersedes AD 2000–20–18, Amendment 39–11930, Docket No. 2000–SW–24–AD.

Applicability: Model 407 helicopters, serial number (S/N) 53000 through 53498 and 53500 through 53512, certificated in any category.

Note 1: This AD applies to each helicopter identified in the preceding applicability provision, regardless of whether it has been otherwise modified, altered, or repaired in the area subject to the requirements of this AD. For helicopters that have been modified, altered, or repaired so that the performance of the requirements of this AD is affected, the owner/operator must request approval for an alternative method of compliance in accordance with paragraph (c) of this AD. The request should include an assessment of the effect of the modification, alteration, or repair on the unsafe condition addressed by this AD; and if the unsafe condition has not been eliminated, the request should include specific proposed actions to address it.

Compliance: Required as indicated, unless accomplished previously.

To prevent the horizontal stabilizer slat (slat) from separating, contacting a rotor blade, and resulting in subsequent loss of control of the helicopter, accomplish the following:

(a) For helicopters, S/N 53000 through 53498 and 53500 through 53503:

(1) Within 10 hours time-in-service (TIS) and thereafter before the first flight of each day, check each slat for a crack at the radius of each bracket, part numbers (P/N) 206–023–119–109, –110 or 407–023–801–127, –128, or 407–023–001–119, –120, or –121, as shown in Figure 1 of this AD:

BILLING CODE 4910–13–P

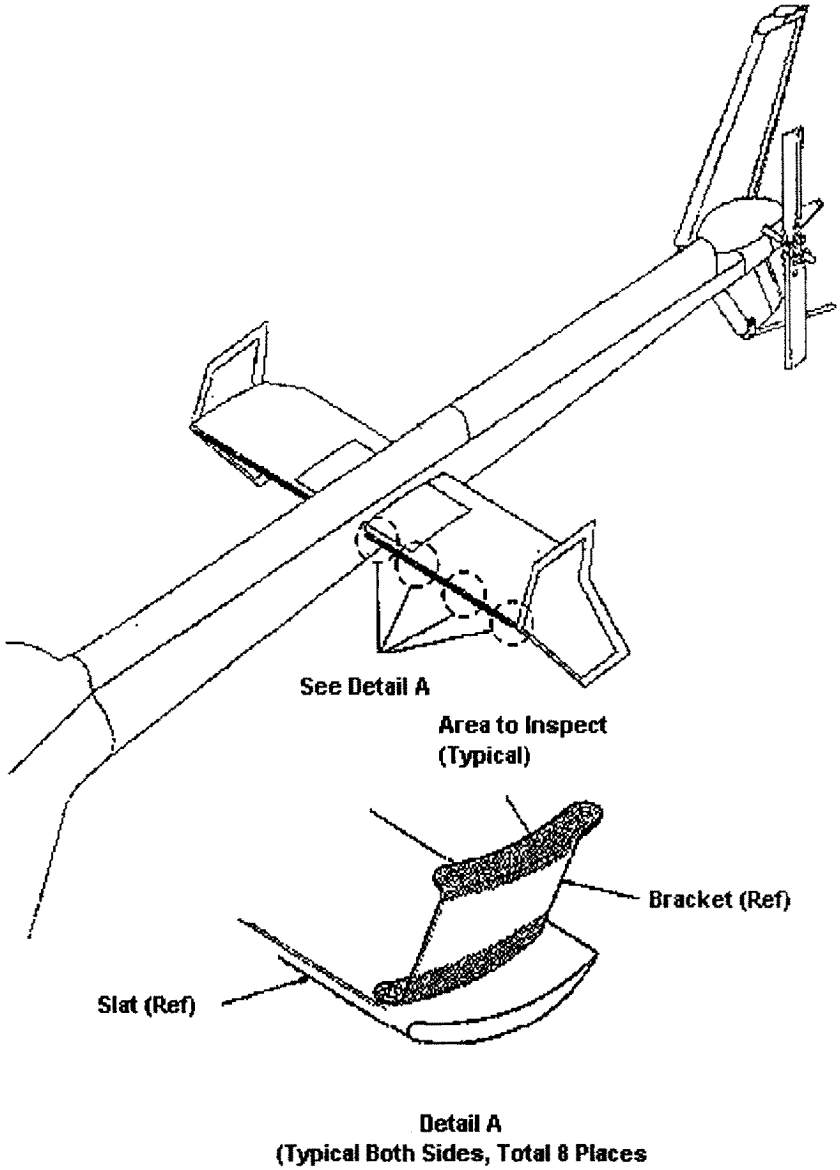

Figure 1. Pre-Flight check of brackets, horizontal stabilizer slats.

BILLING CODE 4910–13–C

(2) An owner/operator (pilot) holding at least a private pilot certificate may perform the check required by paragraph (a)(1) of this AD. The pilot must enter compliance with this provision in accordance with 14 CFR 43.11 and 91.417(a)(2)(v).

(3) If a crack is found, before further flight, replace slat assembly, P/N 407–023–002–117 or 407–023–001–101, with an airworthy, segmented slat assembly, P/N 407–023–001–103.

(4) Replacing slat assembly, P/N 407–023–002–117 and 407–023–001–101, with an airworthy, segmented slat assembly, P/N 407–023–001–103, is terminating action for the check required by paragraph (a)(1) of this AD.

(b) Within 300 hours TIS but no later than December 31, 2002:

(1) For helicopters, S/N 53000 through 53498, replace slat assembly, P/N 407–023–002–117 and 407–023–001–101, with an airworthy, segmented slat assembly, P/N 407–023–001–103, in accordance with the Accomplishment Instructions, Part II, Bell Helicopter Textron Alert Service Bulletin 407–02–52, dated March 20, 2002 (ASB).

(2) For helicopters, S/N 53500 through 53503, modify each segmented slat assembly in accordance with the Accomplishment Instructions, Part III, of the ASB.

(3) For helicopters, S/N 53504 through 53512, install and mark identification plates for each slat assembly in accordance with the Accomplishment Instructions, Part IV, of the ASB.

(c) An alternative method of compliance or adjustment of the compliance time that provides an acceptable level of safety may be used if approved by the Manager, Regulations Group, Rotorcraft Directorate, FAA.

Operators shall submit their requests through an FAA Principal Maintenance Inspector, who may concur or comment and then send it to the Manager, Regulations Group.

Note 2: Information concerning the existence of approved alternative methods of compliance with this AD, if any, may be obtained from the Regulations Group.

(d) Special flight permits may be issued in accordance with 14 CFR 21.197 and 21.199 to operate the helicopter to a location where the requirements of this AD can be accomplished.

(e) Replacing and modifying the slats and installing and marking the identification plates shall be done in accordance with the Accomplishment Instructions, Part II, Part III, and Part IV, respectively, of Bell Helicopter Textron Alert Service Bulletin 407–02–52, dated March 20, 2002. This incorporation by reference was approved by the Director of the Federal Register in accordance with 5 U.S.C. 552(a) and 1 CFR part 51. Copies may be obtained from Bell Helicopter Textron Canada Limited, 12,800 Rue de l'Avenir, Mirabel, Quebec J7J1R4, telephone (450) 437–2862 or (800) 363–8023, fax (450) 433–0272. Copies may be inspected at the FAA, Office of the Regional Counsel, Southwest Region, 2601 Meacham Blvd., Room 663, Fort Worth, Texas; or at the Office of the Federal Register, 800 North Capitol Street, NW., suite 700, Washington, DC.

(f) This amendment becomes effective on November 21, 2002.

Note 3: The subject of this AD is addressed in Transport Canada (Canada) AD CF–2000–09R1, dated June 6, 2002.

Issued in Fort Worth, Texas, on October 21, 2002.

Eric D. Bries,

Acting Manager, Rotorcraft Directorate, Aircraft Certification Service.

[FR Doc. 02–27791 Filed 11–5–02; 8:45 am]

BILLING CODE 4910–13–P

DEPARTMENT OF TRANSPORTATION

Federal Aviation Administration

14 CFR Part 39

[Docket No. 2002–SW–36–AD; Amendment 39–12934; AD 2002–22–09]

RIN 2120–AA64

Airworthiness Directives; Eurocopter France Model AS332C, L, and L1 Helicopters

AGENCY: Federal Aviation Administration, DOT.

ACTION: Final rule; request for comments.

SUMMARY: This amendment adopts a new airworthiness directive (AD) for the specified Eurocopter France (ECF) model helicopters. This action requires, before further flight, inserting statements into the Limitations section of the Rotorcraft Flight Manual (RFM) prohibiting flight under certain atmospheric conditions. Also, this AD requires inspecting the bullet seal on the multi-purpose air intake (MPAI) to determine the pressure and, if the pressure is less than 3 bars on one or both of the sides, replacing the P2 pipe with an airworthy P2 pipe within a specified time interval. This amendment is prompted by the discovery of unairworthy P2 pipes, which might cause insufficient inflation of the bullet seal on the MPAI. This condition, if not detected, could restrict airflow into the engine inlet during flight in icing conditions, resulting in loss of engine power and subsequent loss of control of the helicopter.

DATES: Effective November 21, 2002.

The incorporation by reference of certain publications listed in the regulations is approved by the Director of the Federal Register as of November 21, 2002.

Comments for inclusion in the Rules Docket must be received on or before January 6, 2003.

ADDRESSES: Submit comments in triplicate to the Federal Aviation Administration (FAA), Office of the Regional Counsel, Southwest Region, Attention: Rules Docket No. 2002–SW–36–AD, 2601 Meacham Blvd., Room 663, Fort Worth, Texas 76137. You may also send comments electronically to the Rules Docket at the following address: *9-asw-adcomments@faa.gov.*

The service information referenced in this AD may be obtained from American Eurocopter Corporation, 2701 Forum Drive, Grand Prairie, Texas 75053–4005, telephone (972) 641–3460, fax (972) 641–3527. This information may be examined at the FAA, Office of the Regional Counsel, Southwest Region, 2601 Meacham Blvd., Room 663, Fort Worth, Texas; or at the Office of the Federal Register, 800 North Capitol Street, NW., suite 700, Washington, DC.

FOR FURTHER INFORMATION CONTACT: Ed Cuevas, Aviation Safety Engineer, FAA, Rotorcraft Directorate, Regulations Group, Fort Worth, Texas 76193–0111, telephone (817) 222–5355, fax (817) 222–5961.

SUPPLEMENTARY INFORMATION: The Direction Generale De L'Aviation Civile (DGAC), the airworthiness authority for France, notified the FAA that an unsafe condition may exist on the specified helicopter models. The DGAC advises of the discovery of noncompliant P2 pipes, which might cause insufficient inflation of the bullet seal and lead to engine flame-out during flight in icing condition.

Eurocopter has issued Alert Telex No. 30.00.52 R1, dated April 10, 2002 (Telex), which adds limitations for flight into icing conditions, provides procedures for checking the bullet seal, and specifies replacing any P2 pipe if the pressure on the pressure gage is below 3 bars on one or on both sides. The DGAC classified this Telex as mandatory and issued AD No. 2002–257–080(A), dated May 15, 2002, to ensure the continued airworthiness of these helicopters in France.

These helicopter models are manufactured in France and are type certificated for operation in the United States under the provisions of 14 CFR 21.29 and the applicable bilateral agreement. Pursuant to the applicable bilateral agreement, the DGAC has kept the FAA informed of the situation described above. The FAA has examined the findings of the DGAC, reviewed all available information, and determined that AD action is necessary for products of these type designs that are certificated for operation in the United States.

This unsafe condition is likely to exist or develop on other helicopters of these same type designs registered in the United States. Therefore, this AD is being issued to prevent restricted airflow into the engine inlet during flight in certain atmospheric conditions conductive to icing that could result in loss of complete engine power and subsequent loss of control of the helicopter. This AD requires, before further flight, inserting statements into the Limitations section of the RFM prohibiting flight under certain atmospheric conditions. Also, this AD requires within 10 hours time-in-service (TIS), inspecting the bullet seal on the MPAI to determine the pressure. If the pressure is less than 3 bars on either side, this AD requires, within 100 hours TIS, replacing each unairworthy P2 pipe with an airworthy P2 pipe, which is terminating action for the requirements of this AD. The actions must be done in accordance with the Telex described previously.

None of the Model AS332C, L, or L1 helicopters currently on the U.S. Register have the MPAI installed. All helicopters that have the MPAI installed, included in the applicability of this rule, are currently operated by non-U.S. operators under foreign registry; therefore, they are not directly affected by this AD action. However, the FAA considers that this rule is necessary to ensure that the unsafe condition is addressed in the event that any of these subject helicopters have the MPAI installed in the future.

Should an MPAI be installed on an affected helicopter in the future, the FAA estimates that it would require:

- 1 work hour to insert statements into the RFM,
- 3 work hours to conduct the pressure test,
- 15 work hours to replace both pipes,
- $60 per work hour labor rate, and
- $1400 in material costs to replace two pipes.

Based on these figures, the cost impact of this AD would be $2540 per helicopter.

Since this AD action does not affect any helicopter that is currently on the U.S. register, it has no adverse economic impact and imposes no additional burden on any person. Therefore, notice and public procedures hereon are unnecessary and the amendment may be made effective in less than 30 days after publication in the **Federal Register**.

Since a situation exists that requires the immediate adoption of this regulation, it is found that notice and opportunity for prior public comment hereon are unnecessary, and that good cause exists for making this amendment effective in less than 30 days.

Comments Invited

Although this action is in the form of a final rule that involves requirements affecting flight safety and, thus, was not preceded by notice and an opportunity for public comment, comments are invited on this rule. Interested persons are invited to comment on this rule by submitting such written data, views, or arguments as they may desire. Communications should identify the Rules Docket number and be submitted in triplicate to the address specified under the caption **ADDRESSES.** All communications received on or before the closing date for comments will be considered, and this rule may be amended in light of the comments received. Factual information that supports the commenter's ideas and suggestions is extremely helpful in evaluating the effectiveness of the AD action and determining whether additional rulemaking action would be needed.

Comments are specifically invited on the overall regulatory, economic, environmental, and energy aspects of the rule that might suggest a need to modify the rule. All comments submitted will be available in the Rules Docket for examination by interested persons. A report that summarizes each FAA-public contact concerned with the substance of this AD will be filed in the Rules Docket.

Commenters wishing the FAA to acknowledge receipt of their mailed comments submitted in response to this rule must submit a self-addressed, stamped postcard on which the following statement is made: ''Comments to Docket No. 2002–SW–36–AD.'' The postcard will be date stamped and returned to the commenter.

The regulations adopted herein will not have a substantial direct effect on the States, on the relationship between the national Government and the States, or on the distribution of power and responsibilities among the various levels of government. Therefore, it is determined that this final rule does not have federalism implications under Executive Order 13132.

The FAA has determined that notice and prior public comment are unnecessary in promulgating this regulation; therefore, it can be issued immediately to correct an unsafe condition in aircraft since none of these model helicopters are registered in the United States. The FAA has also determined that this regulation is not a ''significant regulatory action'' under Executive Order 12866. It has been determined further that this action involves an emergency regulation under DOT Regulatory Policies and Procedures (44 FR 11034, February 26, 1979). If it is determined that this emergency regulation otherwise would be significant under DOT Regulatory Policies and Procedures, a final regulatory evaluation will be prepared and placed in the Rules Docket. A copy of it, if filed, may be obtained from the Rules Docket at the location provided under the caption **ADDRESSES.**

List of Subjects in 14 CFR Part 39

Air transportation, Aircraft, Aviation safety, Incorporation by reference, Safety.

Adoption of the Amendment

Accordingly, pursuant to the authority delegated to me by the Administrator, the Federal Aviation Administration amends part 39 of the Federal Aviation Regulations (14 CFR part 39) as follows:

PART 39—AIRWORTHINESS DIRECTIVES

1. The authority citation for part 39 continues to read as follows:

Authority: 49 U.S.C. 106(g), 40113, 44701.

§ 39.13 [Amended]

2. Section 39.13 is amended by adding a new airworthiness directive to read as follows:

2002–22–09 Eurocopter France: Amendment 39–12934. Docket No. 2002–SW–36–AD.

Applicability: Model AS332C, L, and L1 helicopters, with an electrical multi-purpose air intake (MPAI) modified per MOD 332A07–25974, installed, certificated in any category.

Note 1: This AD applies to each helicopter identified in the preceding applicability provision, regardless of whether it has been otherwise modified, altered, or repaired in the area subject to the requirements of this AD. For helicopters that have been modified, altered, or repaired so that the performance of the requirements of this AD is affected, the owner/operator must request approval for an alternative method of compliance in accordance with paragraph (d) of this AD. The request should include an assessment of the effect of the modification, alteration, or repair on the unsafe condition addressed by this AD; and if the unsafe condition has not been eliminated, the request should include specific proposed actions to address it.

Compliance: Required as indicated, unless accomplished previously.

To prevent restricted airflow into the engine inlet during flight in icing conditions resulting in loss of engine power and subsequent loss of control of the helicopter, accomplish the following:

(a) Before further flight, insert the following statement into the Limitations section of the Rotorcraft Flight Manual (RFM).

''It is forbidden to fly into clouds or in fog at an outside air temperature (OAT) equal to or lower than plus 3° Celsius.

It is forbidden to fly in rain at an OAT within the following temperature ranges:

Equal to or above minus 3° Celsius and

Equal to or lower than plus 3° Celsius.

It is forbidden to takeoff, hover, or fly in snow at an OAT equal to or above minus 3° Celsius.''

(b) Within 10 hours TIS, inspect the bullet inflation on the electrical MPAI and determine the pressure in accordance with the Accomplishment Instructions, paragraphs 2.A. and 2.B. of Eurocopter Alert Telex No. 30.00.52 R1, dated April 10, 2002 (Telex).

(1) If the pressure reads three or more bars, the system is operating properly.

(2) If the pressure is less than 3 bars on either side, within 100 hours TIS, replace each unairworthy P2 pipe with an airworthy P2 pipe in accordance with the Accomplishment Instructions, paragraphs 2.D.1, 2.D.2, and 3. of the Telex.

(c) A satisfactory pressure check of less than 3 bars on both sides or replacing each unairworthy P2 pipe with an airworthy P2 pipe is terminating action for the requirements of this AD.

(d) An alternative method of compliance or adjustment of the compliance time that provides an acceptable level of safety may be used if approved by the Manager, Regulations Group, FAA. Operators shall submit their requests through an FAA Principal Maintenance Inspector, who may concur or comment and then send it to the Manager, Regulations Group.

Note 2: Information concerning the existence of approved alternative methods of

compliance with this AD, if any, may be obtained from the Regulations Group.

(e) Special flight permits may be issued in accordance with 14 CFR 21.197 and 21.199 to operate the helicopter to a location where the requirements of this AD can be accomplished.

(f) The inspection and pipe replacement shall be done in accordance with the Accomplishment Instructions, paragraphs 2.A., 2.B., 2.D.1, 2.D.2, and 3. of Eurocopter Alert Telex No. 30.00.52 R1, dated April 10, 2002. This incorporation by reference was approved by the Director of the Federal Register in accordance with 5 U.S.C. 552(a) and 1 CFR part 51. Copies may be obtained from American Eurocopter Corporation, 2701 Forum Drive, Grand Prairie, Texas 75053–4005, telephone (972) 641–3460, fax (972) 641–3527. Copies may be inspected at the FAA, Office of the Regional Counsel, Southwest Region, 2601 Meacham Blvd., Room 663, Fort Worth, Texas; or at the Office of the Federal Register, 800 North Capitol Street, NW., suite 700, Washington, DC.

(g) This amendment becomes effective on November 21, 2002.

Note 3: The subject of this AD is addressed in Direction Generale De L'Aviation Civile (France) AD No. 2002–257–080(A), dated May 15, 2002.

Issued in Fort Worth, Texas, on October 24, 2002.

David A. Downey,

Manager, Rotorcraft Directorate, Aircraft Certification Service.

[FR Doc. 02–27790 Filed 11–5–02; 8:45 am]

BILLING CODE 4910–13–P

DEPARTMENT OF TRANSPORTATION

Federal Aviation Administration

14 CFR Part 39

[Docket No. 2001–NM–251–AD; Amendment 39–12940; AD 2002–20–07 R1]

RIN 2120–AA64

Airworthiness Directives; Boeing Model 737 Series Airplanes

AGENCY: Federal Aviation Administration, DOT.

ACTION: Final rule; request for comments.

SUMMARY: This amendment revises an existing airworthiness directive (AD), applicable to all Boeing Model 737 series airplanes, that currently requires installation of a new rudder control system and changes to the adjacent systems to accommodate that new rudder control system. That amendment would have superseded seven existing ADs; however, this new amendment removes any reference to superseding four of those seven ADs. This new amendment is prompted by an FAA determination that the requirements of those four ADs must remain in effect until installation of the new rudder control system and corresponding changes to the adjacent systems. The actions specified in this AD are intended to prevent an uncommanded rudder hardover event and consequent loss of control of the airplane due to inherent failure modes, including single-jam modes, and certain latent failures or jams combined with a second failure or jam.

DATES: Effective November 12, 2002.

Comments for inclusion in the Rules Docket must be received on or before January 6, 2003.

ADDRESSES: Submit comments in triplicate to the Federal Aviation Administration (FAA), Transport Airplane Directorate, ANM–114, Attention: Rules Docket No. 2001–NM–251–AD, 1601 Lind Avenue, SW., Renton, Washington 98055–4056. Comments may be inspected at this location between 9 a.m. and 3 p.m., Monday through Friday, except Federal holidays. Comments may be submitted via fax to (425) 227–1232. Comments may also be sent via the Internet using the following address: *9-anm-iarcomment@faa.gov.* Comments sent via fax or the Internet must contain ''Docket No. 2001–NM–251–AD'' in the subject line and need not be submitted in triplicate. Comments sent via the Internet as attached electronic files must be formatted in Microsoft Word 97 for Windows or ASCII text.

The information concerning this amendment may be obtained from or examined at the FAA, Transport Airplane Directorate, 1601 Lind Avenue, SW., Renton, Washington 98055–4056.

FOR FURTHER INFORMATION CONTACT: Kenneth W. Frey, Aerospace Engineer, Systems and Equipment Branch, ANM–130S, FAA, Seattle Aircraft Certification Office, 1601 Lind Avenue, SW., Renton, Washington; telephone (425) 227–2673; fax (425) 227–1181.

SUPPLEMENTARY INFORMATION: On September 27, 2002, the FAA issued AD 2002–20–07, amendment 39–12903 (67 FR 62341, October 7, 2002), applicable to all Boeing Model 737 series airplanes, to require installation of a new rudder control system and changes to the adjacent systems to accommodate that new rudder control system. That action was prompted by FAA determinations that the existing system design architecture is unsafe due to inherent failure modes, including single-jam modes and certain latent failures or jams, which, when combined with a second failure or jam, could cause an uncommanded rudder hardover event and consequent loss of control of the airplane. Additionally, the current rudder operational procedure is not effective throughout the entire flight envelope. The actions required by that AD are intended to prevent the identified unsafe condition.

Actions Since Issuance of Previous Rule

AD 2002–20–07 would have superseded seven existing ADs. However, since the issuance of that AD, the FAA finds that only three of those ADs should have been superseded. By superseding the other four ADs, we inadvertently eliminated the requirements of those four ADs as of the effective date of AD 2002–20–07, instead of upon accomplishment of the actions required by that AD. We find that retaining the requirements of those four ADs is necessary to maintain the current level of safety until the requirements of this new AD are accomplished. This finding does not impose any additional burden on any operator because the requirements of those four ADs already exist.

The requirements of the following four ADs remain in effect until installation of the new rudder control system and corresponding changes to the adjacent systems:

- AD 97–09–15 R1, amendment 39–10912 (63 FR 64857, November 24, 1998), applies to all Boeing Model 737–100, –200, –300, –400, and –500 series airplanes. That AD requires a one-time inspection of the engage solenoid valve of the yaw damper on the rudder power control unit (PCU) to determine the part number (P/N) of the valve, and replacement of certain valves with specified P/Ns if necessary. Retaining this requirement will ensure that the appropriate engage solenoid valve is installed on the rudder PCU of all affected airplanes until accomplishment of this new AD.
- AD 97–14–04, amendment 39–10061 (62 FR 35068, June 30, 1997), applies to all Boeing Model 737–100, –200, –300, –400, and –500 series airplanes. That AD requires tests of the main rudder PCU to detect excessive internal leakage of hydraulic fluid, stalling, or reversal, and to verify proper operation of the PCU; and replacement of the PCU with a unit having a different part number if necessary. That AD also requires replacement of the PCU and the vernier control rod bolts with newly designed units, leak tests of the PCU, and replacement of the PCU with a serviceable or newly designed unit if necessary. Retaining these requirements will ensure that the appropriate vernier control rod bolts and main rudder PCU

are installed and properly maintained until accomplishment of this new AD.

• AD 99–11–05, amendment 39–11175 (64 FR 27905, May 24, 1999). A correction of that AD was published in the **Federal Register** on December 13, 1999 (64 FR 69392). That AD applies to all Boeing Model 737 series airplanes, and requires repetitive displacement tests of the secondary slide in the dual concentric servo valve of the PCU for the rudder, and replacement of the valve assembly with a modified valve assembly if necessary. Retaining these requirements will ensure that the repetitive displacement tests will continue to be performed until accomplishment of this new AD.

The AD number and **Federal Register** citation for AD 99–11–05 appeared incorrectly in AD 2002–20–07. This information is specified correctly in the preceding paragraph.

• AD 2000–22–02, amendment 39–11948 (65 FR 64134, October 26, 2000). A correction of that AD was published in the **Federal Register** on November 16, 2000 (65 FR 69239), as AD 2000–22–02 R1, which applies to all Boeing Model 737 series airplanes. Those ADs require revising an FAA-approved Airplane Flight Manual (AFM) procedure to simplify the instructions for correcting a jammed or restricted flight control condition. Retaining this AFM change will ensure that the flightcrew continues to be advised of the procedures necessary to address a condition involving a jammed or restricted rudder until accomplishment of this new AD.

Explanation of Requirements of Rule

Since an unsafe condition has been identified that is likely to exist or develop on other airplanes of this same type design, this new AD revises AD 2002–20–07, which would have superseded seven existing ADs. This new AD continues to require installation of a new rudder control system and changes to the adjacent systems to accommodate that new rudder control system. This new AD also removes any reference to superseding four of those seven existing ADs.

Paragraph (b) of this AD specifies that installation of a new rudder control system and changes to the adjacent systems to accommodate that new rudder control system terminates the requirements of ADs 97–09–15 R1, 97–14–04, 99–11–05, and 2000–22–02 R1.

Determination of Rule's Effective Date

Since a situation exists that requires the immediate adoption of this regulation, it is found that notice and opportunity for prior public comment hereon are impracticable, and that good cause exists for making this amendment effective in less than 30 days.

Comments Invited

Although this action is in the form of a final rule that involves requirements affecting flight safety and, thus, was not preceded by notice and an opportunity for public comment, comments are invited on this rule. Interested persons are invited to comment on this rule by submitting such written data, views, or arguments as they may desire. Communications shall identify the Rules Docket number and be submitted in triplicate to the address specified under the caption **ADDRESSES**. All communications received on or before the closing date for comments will be considered, and this rule may be amended in light of the comments received. Factual information that supports the commenter's ideas and suggestions is extremely helpful in evaluating the effectiveness of the AD action and determining whether additional rulemaking action would be needed.

Submit comments using the following format:

• Organize comments issue-by-issue. For example, discuss a request to change the compliance time and a request to change the service bulletin reference as two separate issues.

• For each issue, state what specific change to the AD is being requested.

• Include justification (*e.g.*, reasons or data) for each request.

Comments are specifically invited on the overall regulatory, economic, environmental, and energy aspects of the rule that might suggest a need to modify the rule. All comments submitted will be available, both before and after the closing date for comments, in the Rules Docket for examination by interested persons. A report that summarizes each FAA-public contact concerned with the substance of this AD will be filed in the Rules Docket.

Commenters wishing the FAA to acknowledge receipt of their comments submitted in response to this rule must submit a self-addressed, stamped postcard on which the following statement is made: ''Comments to Docket Number 2001–NM–251–AD.'' The postcard will be date stamped and returned to the commenter.

Regulatory Impact

The regulations adopted herein will not have a substantial direct effect on the States, on the relationship between the national Government and the States, or on the distribution of power and responsibilities among the various levels of government. Therefore, it is determined that this final rule does not have federalism implications under Executive Order 13132.

The FAA has determined that this regulation is an emergency regulation that must be issued immediately to correct an unsafe condition in aircraft, and that it is not a ''significant regulatory action'' under Executive Order 12866. It has been determined further that this action involves an emergency regulation under DOT Regulatory Policies and Procedures (44 FR 11034, February 26, 1979). If it is determined that this emergency regulation otherwise would be significant under DOT Regulatory Policies and Procedures, a final regulatory evaluation will be prepared and placed in the Rules Docket. A copy of it, if filed, may be obtained from the Rules Docket at the location provided under the caption **ADDRESSES**.

List of Subjects in 14 CFR Part 39

Air transportation, Aircraft, Aviation safety, Safety.

Adoption of the Amendment

Accordingly, pursuant to the authority delegated to me by the Administrator, the Federal Aviation Administration amends part 39 of the Federal Aviation Regulations (14 CFR part 39) as follows:

PART 39—AIRWORTHINESS DIRECTIVES

1. The authority citation for part 39 continues to read as follows:

Authority: 49 U.S.C. 106(g), 40113, 44701.

§ 39.13 [Amended]

2. Section 39.13 is amended by removing amendment 39–9199 (60 FR 18981, April 14, 1995); amendment 39–9954 (62 FR 9679, March 4, 1997); and amendment 39–10283 (63 FR 1903, January 13, 1998); and by adding a new airworthiness directive (AD), amendment 39–12940, to read as follows:

2002–20–07 R1 Boeing: Amendment 39–12940. Docket 2001–NM–251–AD. Revises AD 2002–20–07, Amendment 39–12903. Supersedes AD 95–06–53, Amendment 39–9199; AD 97–05–10, Amendment 39–9954; and AD 98–02–01, Amendment 39–10283.

Applicability: All Model 737 series airplanes, certificated in any category.

Note 1: This AD applies to each airplane identified in the preceding applicability provision, regardless of whether it has been modified, altered, or repaired in the area subject to the requirements of this AD. For airplanes that have been modified, altered, or repaired so that the performance of the

requirements of this AD is affected, the owner/operator must request approval for an alternative method of compliance in accordance with paragraph (c)(1) of this AD. The request should include an assessment of the effect of the modification, alteration, or repair on the unsafe condition addressed by this AD; and, if the unsafe condition has not been eliminated, the request should include specific proposed actions to address it.

Compliance: Required as indicated, unless accomplished previously.

To prevent an uncommanded rudder hardover event and consequent loss of control of the airplane due to inherent failure modes, including single-jam modes, and certain latent failures or jams combined with a second failure or jam; accomplish the following:

Installation

(a) Within 6 years after November 12, 2002 (the effective date of AD 2002–20–07, amendment 39–12903), do the actions required by paragraphs (a)(1) and (a)(2) of this AD, in accordance with a method approved by the Manager, Seattle Aircraft Certification Office (ACO), FAA.

(1) Install a new rudder control system that includes new components such as an aft torque tube, hydraulic actuators, and associated control rods, and additional wiring throughout the airplane to support failure annunciation of the rudder control system in the flight deck. The system also must incorporate two separate inputs, each with an override mechanism, to two separate servo valves on the main rudder power control unit (PCU); and an input to the standby PCU that also will include an override mechanism.

(2) Make applicable changes to the adjacent systems to accommodate the new rudder control system.

Terminating Action

(b) Accomplishment of the actions required by paragraph (a) of this AD constitutes terminating action for the requirements of AD 97–09–15 R1, amendment 39–10912; AD 97–14–04, amendment 39–10061; AD 99–11–05, amendment 39–11175; and AD 2000–22–02 R1, amendment 39–11948.

Alternative Methods of Compliance

(c)(1) An alternative method of compliance or adjustment of the compliance time that provides an acceptable level of safety may be used if approved by the Manager, Seattle ACO. Operators shall submit their requests through an appropriate FAA Principal Maintenance Inspector, who may add comments and then send it to the Manager, Seattle ACO.

(2) Alternative methods of compliance, approved previously in accordance with the ADs listed in the following table, are not considered to be approved as alternative methods of compliance with this AD:

TABLE—LIST OF SUPERSEDED ADS

AD No.	Amendment No.
95–06–53	39–9199

TABLE—LIST OF SUPERSEDED ADS—Continued

AD No.	Amendment No.
97–05–10	39–9954
98–02–01	39–10283

Note 2: Information concerning the existence of approved alternative methods of compliance with this AD, if any, may be obtained from the Seattle ACO.

Special Flight Permits

(d) Special flight permits may be issued in accordance with §§ 21.197 and 21.199 of the Federal Aviation Regulations (14 CFR 21.197 and 21.199) to operate the airplane to a location where the requirements of this AD can be accomplished.

Effective Date

(e) This amendment becomes effective on November 12, 2002.

Issued in Renton, Washington, on October 30, 2002.

Vi L. Lipski,

Manager, Transport Airplane Directorate, Aircraft Certification Service.

[FR Doc. 02–28111 Filed 11–5–02; 8:45 am]

BILLING CODE 4910–13–P

DEPARTMENT OF HEALTH AND HUMAN SERVICES

Food and Drug Administration

21 CFR Part 510

New Animal Drugs; Change of Sponsor's Name

AGENCY: Food and Drug Administration, HHS.

ACTION: Final rule; technical amendment.

SUMMARY: The Food and Drug Administration (FDA) is amending the animal drug regulations to reflect a change of sponsor's name from Fort Dodge Animal Health, Division of American Home Products Corp. to Fort Dodge Animal Health, Division of Wyeth and to correct the sponsor's street address.

DATES: This rule is effective November 6, 2002.

FOR FURTHER INFORMATION CONTACT: Lonnie W. Luther, Center for Veterinary Medicine (HFV–104), Food and Drug Administration, 7519 Standish Pl., Rockville, MD 20855, 301–827–8549, e-mail: *lluther@cvm.fda.gov*.

SUPPLEMENTARY INFORMATION: Fort Dodge Animal Health, Division of American Home Products Corp., 500 Fifth St. NW., Fort Dodge, IA 50501, has informed FDA of a change of name to Fort Dodge Animal Health, Division of Wyeth. Accordingly, the agency is amending the regulations in 21 CFR 510.600(c) to reflect the change. In addition, when this sponsor's address was first codifed (61 FR 5505, February 13, 1996), an incorrect street number was included. At this time, it is being corrected.

This rule does not meet the definition of ''rule'' in 5 U.S.C. 804(3)(A) because it is a rule of ''particular applicability.'' Therefore, it is not subject to the congressional review requirements in 5 U.S.C. 801–808.

List of Subjects in 21 CFR Part 510

Administrative practice and procedure, Animal drugs, Labeling, Reporting and recordkeeping requirements.

Therefore, under the Federal Food, Drug, and Cosmetic Act and under authority delegated to the Commissioner of Food and Drugs and redelegated to the Center for Veterinary Medicine, 21 CFR part 510 is amended as follows:

PART 510—NEW ANIMAL DRUGS

1. The authority citation for 21 CFR part 510 continues to read as follows:

Authority: 21 U.S.C. 321, 331, 351, 352, 353, 360b, 371, 379e.

§ 510.600 [Amended]

2. Section 510.600 *Names, addresses, and drug labeler codes of sponsors of approved applications* is amended in the table in paragraph (c)(1) in the entry for ''Fort Dodge Animal Health, Division of American Home Products Corp.'' by removing ''American Home Products Corp.'' and ''800'' and by adding in their places, respectively, ''Wyeth'' and ''500''; and in the table in paragraph (c)(2) in the entry for ''000856'' by removing ''American Home Products Corp.'' and ''800'' and by adding in their places, respectively, ''Wyeth'' and ''500''.

Dated: October 28, 2002.

Andrew J. Beaulieu,

Acting Director, Office of New Animal Drug Evaluation, Center for Veterinary Medicine.

[FR Doc. 02–28154 Filed 11–5–02; 8:45 am]

BILLING CODE 4160–01–S

DEPARTMENT OF HEALTH AND HUMAN SERVICES

Food and Drug Administration

21 CFR Parts 510, 520, 522, and 524

New Animal Drugs; Change of Sponsor

AGENCY: Food and Drug Administration, HHS.

ACTION: Final rule.

SUMMARY: The Food and Drug Administration (FDA) is amending the animal drug regulations to reflect a change of sponsor for 12 approved new animal drug applications (NADAs) from A. H. Robins Co. to Fort Dodge Animal Health, Division of Wyeth.

DATES: This rule is effective November 6, 2002.

FOR FURTHER INFORMATION CONTACT: Lonnie W. Luther, Center for Veterinary Medicine (HFV–104), Food and Drug Administration, 7519 Standish Pl., Rockville, MD 20855, 301–827–8549, e-mail: lluther@cvm.fda.gov.

SUPPLEMENTARY INFORMATION: A. H. Robins Co., P.O. Box 518, Fort Dodge, IA 50501–0518, has informed FDA that it has transferred ownership of, and all rights and interest in, the following 12 approved NADAs to Fort Dodge Animal Health, Division of Wyeth, 800 Fifth St. NW., Fort Dodge, IA 50501:

NADA Number	Product Name
034–879	DOPRAM–V Injectable
038–838	ROBAXIN–V Injectable
045–715	ROBAXIN–V Tablets
091–065	ROBIZONE–V
093–105	ROBIZONE–V
098–640	ROBIZONE Injectable 20%
101–777	Robinul-V Injectable
106–111	Telazol
136–651	Guailaxin
141–003	Derm-Otic Ointment
141–004	Robamox-V
141–005	Robamox-V Tablets

Accordingly, the agency is amending the regulations in 21 CFR 520.88b, 520.88f, 520.1380, 520.1720a, 522.775, 522.1066, 522.1085, 522.1380, 522.1720, 522.2470, and 524.1600a to reflect the transfer of ownership and to reflect current format.

Following this change of sponsorship, A. H. Robins Co. is no longer the sponsor of any approved application. Accordingly, 21 CFR 510.600(c) is being amended to remove the entries for A. H. Robins Co.

This rule does not meet the definition of ''rule'' in 5 U.S.C. 804(3)(A) because it is a rule of ''particular applicability.'' Therefore, it is not subject to the congressional review requirements in 5 U.S.C. 801–808.

List of Subjects

21 CFR Part 510

Administrative practice and procedure, Animal drugs, Labeling, Reporting and recordkeeping requirements.

21 CFR Parts 520, 522, and 524

Animal drugs.

Therefore, under the Federal Food, Drug, and Cosmetic Act and under authority delegated to the Commissioner of Food and Drugs and redelegated to the Center for Veterinary Medicine, 21 CFR parts 510, 520, 522, and 524 are amended as follows:

PART 510—NEW ANIMAL DRUGS

1. The authority citation for 21 CFR part 510 continues to read as follows:

Authority: 21 U.S.C. 321, 331, 351, 352, 353, 360b, 371, 379e.

§ 510.600 [Amended]

2. Section 510.600 *Names, addresses, and drug labeler codes of sponsors of approved applications* is amended in the table in paragraph (c)(1) by removing the entry for ''A. H. Robins Co.'' and in the table in paragraph (c)(2) by removing the entry for ''000031''.

PART 520—ORAL DOSAGE FORM NEW ANIMAL DRUGS

3. The authority citation for 21 CFR part 520 continues to read as follows:

Authority: 21 U.S.C. 360b.

§ 520.88b [Amended]

4. Section 520.88b *Amoxicillin trihydrate for oral suspension* is amended in paragraph (c) by removing ''000031 and 000093'' and by adding in its place ''000093 and 000856''.

§ 520.88f [Amended]

5. Section 520.88f *Amoxicillin trihydrate tablets* is amended in paragraph (b) by removing ''000031 or 000093'' and by adding in its place ''000093 and 000856''.

§ 520.1380 [Amended]

6. Section 520.1380 *Methocarbamol tablets* is amended in paragraph (c) by removing ''000031'' and by adding in its place ''000856''.

§ 520.1720a [Amended]

7. Section 520.1720a *Phenylbutazone tablets and boluses* is amended in paragraph (b)(3) by removing ''000031''.

PART 522—IMPLANTATION OR INJECTABLE DOSAGE FORM NEW ANIMAL DRUGS

8. The authority citation for 21 CFR part 522 continues to read as follows:

Authority: 21 U.S.C. 360b.

§ 522.775 [Amended]

9. Section 522.775 *Doxapram hydrochloride injection* is amended in paragraph (b) by removing ''000031'' and by adding in its place ''000856''.

§ 522.1066 [Amended]

10. Section 522.1066 *Glycopyrrolate injection* is amended in paragraph (b) by removing ''000031'' and by adding in its place ''000856''.

§ 522.1085 [Amended]

11. Section 522.1085 *Guaifenesin sterile powder* is amended in paragraph (b) by removing ''No. 000031'' and by adding in its place ''Nos. 000856''.

§ 522.1380 [Amended]

12. Section 522.1380 *Methocarbamol injection* is amended in paragraph (b) by removing ''000031'' and by adding in its place ''No. 000856''.

§ 522.1720 [Amended]

13. Section 522.1720 *Phenylbutazone injection* is amended in paragraph (b)(1) by removing ''000031'' and by numerically adding ''000856''.

§ 522.2470 [Amended]

14. Section 522.2470 *Tiletamine hydrochloride and zolazepam hydrochloride for injection* is amended in paragraph (b) by removing ''000031'' and by adding in its place ''000856''.

PART 524—OPHTHALMIC AND TOPICAL DOSAGE FORM NEW ANIMAL DRUGS

15. The authority citation for 21 CFR part 524 continues to read as follows:

Authority: 21 U.S.C. 360b.

§ 524.1600a [Amended]

16. Section 524.1600a *Nystatin, neomycin, thiostrepton, and triamcinolone acetonide ointment* is amended in paragraph (b) by removing ''000031'' and by numerically adding ''000856''.

Dated: October 28, 2002.

Andrew J. Beaulieu,

Acting Director, Office of New Animal Drug Evaluation, Center for Veterinary Medicine.

[FR Doc. 02–28156 Filed 11–5–02; 8:45 am]

BILLING CODE 4160–01–S

DEPARTMENT OF HOUSING AND URBAN DEVELOPMENT

24 CFR Part 982

[Docket No. FR–4759–C–02]

RIN 2577–AC39

Housing Choice Voucher Program Homeownership Option: Eligibility of Units Owned or Controlled by a Public Housing Agency; Correction

AGENCY: Office of the Assistant Secretary for Public and Indian Housing, HUD.

ACTION: Interim rule; correction.

SUMMARY: On October 28, 2002, HUD published an interim rule establishing the eligibility of units owned or substantially controlled by a public housing agency (PHA) for purchase under the Housing Choice Voucher Program homeownership option. The interim rule inadvertently provided an incorrect designation for the paragraph being added to the voucher program regulations. This document makes the necessary technical correction.

DATES: *Effective Date:* This correction is effective on November 27, 2002.

Comment Due Date: The public comment period for the October 28, 2002 interim rule is unchanged. Comments on the interim rule are due on or before December 27, 2002.

ADDRESSES: Interested persons are invited to submit comments regarding the October 28, 2002 interim rule to the Office of the Rules Docket Clerk, Office of General Counsel, Room 10276, Department of Housing and Urban Development, 451 Seventh Street, SW., Washington, DC 20410–0500. Communications should refer to the docket number and title of the interim rule. Facsimile (FAX) comments are not acceptable. A copy of each communication submitted will be available for inspection and copying between 7:30 a.m. and 5:30 p.m. at the above address.

FOR FURTHER INFORMATION CONTACT: Gerald J. Benoit, Office of Public and Indian Housing, Department of Housing and Urban Development, Room 4210, 451 Seventh Street, SW., Washington, DC 20410; telephone (202) 708–0477. (This is not a toll-free number.) Hearing- or speech-impaired individuals may access this number via TTY by calling the toll-free Federal Information Relay Service at 1–800–877–8339.

SUPPLEMENTARY INFORMATION:

I. Background

On October 28, 2002 (67 FR 65864), HUD published an interim rule establishing the eligibility of units owned or substantially controlled by a public housing agency (PHA) for purchase under the Housing Choice Voucher Program homeownership option. The interim rule, which will become effective on November 27, 2002, inadvertently provided an incorrect designation for the paragraph being added to the voucher program regulations. Specifically, the interim rule provides that a new paragraph (c) is being added to § 982.628. The correct designation is § 982.628(d). This document makes the necessary technical correction to the October 28, 2002 interim rule.

PART 982—[CORRECTED]

Accordingly, the interim rule FR Doc. 02–27310, published on October 28, 2002, (67 FR 65864) is corrected as follows:

1. On page 65865, in the third column, correct amendatory instruction 2. and the paragraph heading to read as follows:

2. Add § 982.628(d) to read as follows:

§ 982. 628 Homeownership option: Eligible units.

* * * * *

(d) *PHA-owned units.* * * *

* * * * *

Dated: October 31, 2002.

Aaron Santa Anna,

Assistant General Counsel for Regulations.

[FR Doc. 02–28128 Filed 11–5–02; 8:45 am]

BILLING CODE 4210–33–P

DEPARTMENT OF THE INTERIOR

Office of Surface Mining Reclamation and Enforcement

30 CFR Part 915

[IA–011–FOR]

Iowa Regulatory Program

AGENCY: Office of Surface Mining Reclamation and Enforcement, Interior.

ACTION: Final rule; approval of amendment.

SUMMARY: We, the Office of Surface Mining Reclamation and Enforcement (OSM), are approving an amendment to the Iowa regulatory program (Iowa program) under the Surface Mining Control and Reclamation Act of 1977 (SMCRA or the Act). Iowa proposed to revise its rules concerning inspections and enforcement. Iowa revised its program to be consistent with the corresponding Federal regulations.

EFFECTIVE DATE: November 6, 2002.

FOR FURTHER INFORMATION CONTACT: John W. Coleman, Mid-Continent Regional Coordinating Center. Telephone: (618) 463–6460. Internet address: *jcoleman@osmre.gov.*

SUPPLEMENTARY INFORMATION:

I. Background on the Iowa Program
II. Submission of the Amendment
III. OSM's Findings
IV. Summary and Disposition of Comments
V. OSM's Decision
VI. Procedural Determinations

I. Background on the Iowa Program

Section 503(a) of the Act permits a State to assume primacy for the regulation of surface coal mining and reclamation operations on non-Federal and non-Indian lands within its borders by demonstrating that its State program includes, among other things, ''* * * a State law which provides for the regulation of surface coal mining and reclamation operations in accordance with the requirements of this Act * * *; and rules and regulations consistent with regulations issued by the Secretary pursuant to this Act.'' *See* 30 U.S.C. 1253(a)(1) and (7). On the basis of these criteria, the Secretary of the Interior conditionally approved the Iowa program effective April 10, 1981. You can find background information on the Iowa program, including the Secretary's findings, the disposition of comments, and conditions of approval, in the January 21, 1981, **Federal Register** (46 FR 5885). You can also find later actions concerning Iowa's program and program amendments at 30 CFR 915.10, 915.15, and 915.16.

II. Submission of the Amendment

By letter dated June 14, 2002 (Administrative Record No. IA–447), Iowa sent us an amendment to its program under SMCRA (30 U.S.C. 1201 *et seq.*). Iowa sent the amendment in response to a letter dated June 17, 1997 (Administrative Record No. IA–440), that we sent to Iowa in accordance with 30 CFR 732.17(c).

We announced receipt of the amendment in the August 12, 2002, **Federal Register** (67 FR 52659). In the same document, we opened the public comment period and provided an opportunity for a public hearing or meeting on the adequacy of the amendment. The public comment period ended on September 12, 2002. We received comments from one Federal agency.

III. OSM's Findings

Following are the findings we made concerning the amendment under SMCRA and the Federal regulations at

30 CFR 732.15 and 732.17. We are approving the amendment as described below.

Iowa proposed to revise Iowa Administrative Code (IAC) 27–40.71(207) to incorporate by reference 30 CFR 840.11, as in effect on July 1, 2001. Previously, Iowa's provision incorporated by reference 30 CFR 840.11, as in effect on July 1, 1992. We find that Iowa's revision at IAC 27–40.71(207) is no less effective than the Federal regulations at 30 CFR 840.11. We also find that Iowa's revision partially satisfies the requirements of our letter dated June 17, 1997 (Administrative Record No. IA–440), that we sent to Iowa in accordance with 30 CFR 732.17(c).

IV. Summary and Disposition of Comments

Public Comments

We asked for public comments on the amendment, but did not receive any.

Federal Agency Comments

Under 30 CFR 732.17(h)(11)(i) and section 503(b) of SMCRA, we requested comments on the amendment from various Federal agencies with an actual or potential interest in the Iowa program (Administrative Record No. IA–447.3). The Natural Resources Conservation Service responded on July 22, 2002 (Administrative Record No. IA–447.2), stating that it had no concern over this proposed amendment.

Environmental Protection Agency (EPA) Concurrence and Comments

Under 30 CFR 732.17(h)(11)(ii), we are required to get a written concurrence from EPA for those provisions of the program amendment that relate to air or water quality standards issued under the authority of the Clean Water Act (33 U.S.C. 1251 *et seq.*) or the Clean Air Act (42 U.S.C. 7401 *et seq.*). None of the revisions that Iowa proposed to make in this amendment pertain to air or water quality standards. Therefore, we did not ask EPA to concur on the amendment.

Under 30 CFR 732.17(h)(11)(i), we requested comments on the amendment from EPA (Administrative Record No. IA–447.3. EPA did not respond to our request.

State Historic Preservation Officer (SHPO) and the Advisory Council on Historic Preservation (ACHP)

Under 30 CFR 732.17(h)(4), we are required to request comments from the SHPO and ACHP on amendments that may have an effect on historic properties. On June 19, 2002, we requested comments on Iowa's amendment (Administrative Record No. IA–447.3), but neither responded to our request.

V. OSM's Decision

Based on the above finding, we approve the amendment Iowa sent us on June 14, 2002. We approve the regulations proposed by Iowa with the provision that they be fully promulgated in identical form to the rules submitted to and reviewed by OSM and the public.

To implement this decision, we are amending the Federal regulations at 30 CFR part 915, which codify decisions concerning the Iowa program. We find that good cause exists under 5 U.S.C. 553(d)(3) to make this final rule effective immediately. Section 503(a) of SMCRA requires that the State's program demonstrate that the State has the capability of carrying out the provisions of the Act and meeting its purposes. Making this final rule effective immediately will expedite that process. SMCRA requires consistency of State and Federal standards.

Effect of OSM's Decision

Section 503 of SMCRA provides that a State may not exercise jurisdiction under SMCRA unless the State program is approved by the Secretary. Similarly, 30 CFR 732.17(a) requires that any change of an approved State program be submitted to OSM for review as a program amendment. The Federal regulations at 30 CFR 732.17(g) prohibit any changes to State programs that are not approved by OSM. In the oversight of the Iowa program, we will recognize only the statutes, regulations, and other materials we have approved, together with any consistent implementing policies, directives, and other materials. We will require Iowa to enforce only approved provisions.

VI. Procedural Determinations

Executive Order 12630—Takings

This rule does not have takings implications. This determination is based on the analysis performed for the counterpart Federal regulation.

Executive Order 12866—Regulatory Planning and Review

This rule is exempted from review by the Office of Management and Budget under Executive Order 12866.

Executive Order 12988—Civil Justice Reform

The Department of the Interior has conducted the reviews required by section 3 of Executive Order 12988 and has determined that this rule meets the applicable standards of subsections (a) and (b) of that section. However, these standards are not applicable to the actual language of State regulatory programs and program amendments because each program is drafted and promulgated by a specific State, not by OSM. Under sections 503 and 505 of SMCRA (30 U.S.C. 1253 and 1255) and the Federal regulations at 30 CFR 730.11, 732.15, and 732.17(h)(10), decisions on proposed State regulatory programs and program amendments submitted by the States must be based solely on a determination of whether the submittal is consistent with SMCRA and its implementing Federal regulations and whether the other requirements of 30 CFR parts 730, 731, and 732 have been met.

Executive Order 13132—Federalism

This rule does not have Federalism implications. SMCRA delineates the roles of the Federal and State governments with regard to the regulation of surface coal mining and reclamation operations. One of the purposes of SMCRA is to ''establish a nationwide program to protect society and the environment from the adverse effects of surface coal mining operations.'' Section 503(a)(1) of SMCRA requires that State laws regulating surface coal mining and reclamation operations be ''in accordance with'' the requirements of SMCRA, and section 503(a)(7) requires that State programs contain rules and regulations ''consistent with'' regulations issued by the Secretary pursuant to SMCRA.

Executive Order 13211—Regulations That Significantly Affect the Supply, Distribution, or Use of Energy

On May 18, 2001, the President issued Executive Order 13211 which requires agencies to prepare a Statement of Energy Effects for a rule that is (1) considered significant under Executive Order 12866 and (2) likely to have a significant adverse effect on the supply, distribution, or use of energy. Because this rule is exempt from review under Executive Order 12866 and is not expected to have a significant adverse effect on the supply, distribution, or use of energy, a Statement of Energy Effects is not required.

National Environmental Policy Act

This rule does not require an environmental impact statement because section 702(d) of SMCRA (30 U.S.C. 1292(d)) provides that agency decisions on proposed State regulatory program provisions do not constitute major Federal actions within the meaning of section 102(2)(C) of the National Environmental Policy Act (42 U.S.C. 4332(2)(C)).

Paperwork Reduction Act

This rule does not contain information collection requirements that require approval by the Office of Management and Budget under the Paperwork Reduction Act (44 U.S.C. 3507 *et seq.*).

Regulatory Flexibility Act

The Department of the Interior certifies that this rule will not have a significant economic impact on a substantial number of small entities under the Regulatory Flexibility Act (5 U.S.C. 601 *et seq.*). The State submittal, which is the subject of this rule, is based upon counterpart Federal regulations for which an economic analysis was prepared and certification made that such regulations would not have a significant economic effect upon a substantial number of small entities. In making the determination as to whether this rule would have a significant economic impact, the Department relied upon the data and assumptions for the counterpart Federal regulations.

Small Business Regulatory Enforcement Fairness Act

This rule is not a major rule under 5 U.S.C. 804(2), the Small Business Regulatory Enforcement Fairness Act. This rule: (a) Does not have an annual effect on the economy of $100 million; (b) will not cause a major increase in costs or prices for consumers, individual industries, Federal, State, or local government agencies, or geographic regions; and (c) does not have significant adverse effects on competition, employment, investment, productivity, innovation, or the ability of U.S.-based enterprises to compete with foreign-based enterprises. This determination is based upon the fact that the State submittal which is the subject of this rule is based upon counterpart Federal regulations for which an analysis was prepared and a determination made that the Federal regulation was not considered a major rule.

Unfunded Mandates

This rule will not impose an unfunded mandate on State, local, or tribal governments or the private sector of $100 million or more in any given year. This determination is based upon the fact that the State submittal, which is the subject of this rule, is based upon counterpart Federal regulations for which an analysis was prepared and a determination made that the Federal regulation did not impose an unfunded mandate.

List of Subjects in 30 CFR Part 915

Intergovernmental relations, Surface mining, Underground mining.

Dated: September 20, 2002.

Charles E. Sandberg,

Acting Regional Director, Mid-Continent Regional Coordinating Center.

For the reasons set out in the preamble, 30 CFR 915 is amended as set forth below:

PART 915—IOWA

1. The authority citation for part 915 continues to read as follows:

Authority: 30 U.S.C. 1201 *et seq.*

2. Section 915.15 is amended in the table by adding a new entry in chronological order by ''Date of final publication'' to read as follows:

§ 915.15 Approval of Iowa regulatory program amendments.

* * * * *

Original amendment submission date	Date of final publication	Citation/description
*	*	*
June 14, 2002	November 6, 2002	IAC 27–40.71(207).

[FR Doc. 02–28203 Filed 11–5–02; 8:45 am]

BILLING CODE 4310–05–P

DEPARTMENT OF THE INTERIOR

Office of Surface Mining Reclamation and Enforcement

30 CFR Part 917

[KY–238–FOR]

Kentucky Regulatory Program

AGENCY: Office of Surface Mining Reclamation and Enforcement, Interior.

ACTION: Final rule.

SUMMARY: We, the Office of Surface Mining (OSM) are approving, with certain conditions, an amendment to the Kentucky permanent regulatory program (hereinafter referred to as the Kentucky program) under the Surface Mining Control and Reclamation Act of 1977 (SMCRA). Kentucky proposed revisions to their State statutes pertaining to easement of necessity. To the extent that it is construed in the manner discussed in the findings below, Kentucky's proposed amendment is consistent with the corresponding Federal regulations.

EFFECTIVE DATE: November 6, 2002.

FOR FURTHER INFORMATION CONTACT: William J. Kovacic, Field Office Director, Telephone: (859) 260–8400. Address: Office of Surface Mining Reclamation and Enforcement, 2675 Regency Road, Lexington, Kentucky 40503.

SUPPLEMENTARY INFORMATION:

I. Background on the Kentucky Program
II. Submission of the Proposed Amendment
III. Director's Findings
IV. Summary and Disposition of Comments
V. Director's Decision
VI. Procedural Determinations

I. Background on the Kentucky Program

Section 503(a) of the Act permits a State to assume primacy for the regulation of surface coal mining and reclamation operations on non-Federal and non-Indian lands within its borders by demonstrating that its State program includes, among other things, ''a State law which provides for the regulation of surface coal mining and reclamation operations in accordance with the requirements of the Act * * *; and rules and regulations consistent with regulations issued by the Secretary pursuant to the Act.'' See 30 U.S.C. 1253(a)(1) and (7). On the basis of these criteria, the Secretary of the Interior conditionally approved the Kentucky program on May 18, 1982. You can find background information on the Kentucky program, including the Secretary's findings, the disposition of comments, and conditions of approval in the May 18, 1982, **Federal Register** (47 FR 21404). You can also find later actions concerning Kentucky's program and program amendments at 30 CFR 917.11, 917.12, 917.13, 917.15, 917.16, and 917.17.

II. Submission of the Proposed Amendment

By letter dated April 25, 2002 (Administrative Record No. KY–1530), Kentucky sent us an amendment to its program under SMCRA (30 U.S.C. 1201 *et seq.*). Kentucky sent the amendment

at its own initiative. A summary of the amended language follows. It amends the Kentucky Revised Statutes (KRS) at 350.280 and is referenced as Kentucky House Bill 809.

We announced receipt of the proposed amendment in the June 19, 2002, **Federal Register** (67 FR 41653). In the same document, we opened the public comment period and provided an opportunity for a public hearing or meeting on the amendment's adequacy. The public comment period ended on July 19, 2002.

We did not hold a public hearing or meeting because no one requested one. We did, however, receive four comments; one of these was from an industry group and three were from Federal agencies.

III. Director's Findings

Following are the findings we made concerning the amendment under SMCRA and the Federal regulations at 30 CFR 732.15 and 732.17. We are approving the amendment to the extent described below. Any revisions that we do not specifically discuss below concern non-substantive wording or editorial changes.

(a) Revisions to Kentucky's Statute That Are Not the Same as the Corresponding Provisions of the Federal Regulation(s) and/or Statute(s)

General

Kentucky submitted the following amendment to KRS 350.280, Section (1): Added subsection (a) in its entirety to read (at page 1, line 2) ''As used in this section, 'he or she' includes 'person' as defined in KRS 350.010.''

We find that this amended language is non-substantive and, as such, does not render the Kentucky program less stringent than SMCRA or less effective than the Federal regulations. The language is, therefore, approved.

Easements of Necessity for Cessation Orders Issued Due to Imminent Danger to the Public or Significant, Imminent Environmental Harm

Existing language in subsection (1) was renamed subdivision (b), and amendments were added. As now proposed, subdivision (b) reads as follows, with new language shown in italics:

(b) If a permittee or operator has been issued a notice or order directing abatement of a violation on the basis of an imminent danger to health and safety of the public or significant imminent environmental harm, *and the violation involves an order of cessation and immediate compliance or an order to abate and alleviate in which the cabinet directs the permittee or operator to begin immediate abatement of the violation,* and the notice or order requires access to property for which the permittee or operator does not have the legal right of entry necessary in order to abate that violation, and the owner or legal occupant of that property has refused access, an easement of necessity is recognized on behalf of the permittee or operator for the limited purpose of abating that violation. *The easement of necessity becomes effective, and the permittee or operator is authorized to enter the property to undertake immediate action to abate the violation if he or she concurrently:*

1. Provides to the property owner or legal occupant a copy of the cabinet's order;

2. Provides to the property owner or legal occupant and cabinet an affidavit that he or she has been denied access to the property; and

3. Provides to the property owner or legal occupant a statement that he or she, the permittee or operator, will obtain an appraisal completed by a certified real estate appraiser or other qualified appraiser of the damages to the property, including loss of use, that will result from the violation, as abated, and those that are likely to occur to the property when the permittee or operator enters the property in order to abate the violation, that the appraisal will be completed and provided to the property owner or legal occupant within three (3) days of entry of the operator or permittee, and that he or she will pay the property owner or legal occupant the amount of the damages in the permittee or operator's appraisal at that time.

Kentucky also created new subdivisions (c)–(e), which read as follows:

(c) Following the effective date of the easement of necessity, the following procedure shall be followed with respect to the appraisal of the damages that will result from the violation, as abated, and those that are likely to occur to the property when the permittee or operator enters the property in order to abate the violation:

1. The permittee or operator shall have an appraiser on the site and have his or her appraisal completed and submitted to the property owner or legal occupant within three (3) days of entry on the property by the operator or permittee;

2. The property owner or legal occupant shall accept or reject this appraisal in writing within three (3) days of receipt of the completed appraisal;

3. If the property owner or legal occupant rejects this appraisal, he or she may hire a certified real estate appraiser or other qualified appraiser to appraise the damages, including loss of use, that will result from the violation, as abated, and those that are likely to occur to the property if the permittee or operator is allowed to enter the property in order to abate the violation. Upon receipt of the invoice the permittee or operator shall pay for the property owner or legal occupant's appraisal up to the amount he or she paid for his or her own appraisal; and

4. If the property owner or legal occupant has the appraisal done, he or she shall have it completed and provided to the permittee or operator within seven (7) days of receipt of the permittee or operator's completed appraisal.

(d) If the property owner or legal occupant has an appraisal done, and if, based on his or her appraisal and the permittee or operator's appraisal, an agreement is not reached on the appraised damages, the permittee or operator shall pay the property owner or legal occupant the amount of the permittee or operator's appraisal damages, and if the property owner or legal occupant's appraisal damages are for more than the permittee or operator's, the permittee or operator shall pay the difference to the Circuit Clerk, in the county in which the majority of the property lies, to be placed in an interest-bearing account in a bank until final resolution of the matter by agreement or court or jury judgment. If the property owner or legal occupant is granted award of some or all of the difference, he or she shall also receive the interest on that portion of the difference.

(e) If the property owner or legal occupant does not accept or reject the permittee or operator's appraisal and offer of funds for damages, the operator or permittee shall pay the appraised damages to the Circuit Clerk within three (3) business days of the nonacceptance. These funds shall be placed in an interest-bearing account in a bank until resolution of the matter by agreement or court or jury judgment.

We previously approved Kentucky's creation of an easement of necessity for a permittee or operator who lacks legal right of entry, or permission to enter, land in order to abate conditions that create imminent danger to the public or imminent, significant environmental harm, as cited in a notice or order of cessation under the approved Kentucky program. (66 FR 33020, 33021, June 20, 2001) However, subsection (1), as amended, creates a real property damage appraisal procedure that is not provided for in either SMCRA or the Federal regulations. While the language on its face does not appear inconsistent with SMCRA or its accompanying regulations, we are concerned that the appraisal process could delay the abatement of imminent dangers to the public or of imminent, significant environmental harm. Therefore, we find subsection (1), as amended, to be consistent with 30 CFR 843.11(b)(2), which requires expeditious abatement of imminent dangers and harms, but it is consistent only to the extent that the easement of necessity is created immediately after completion of the three steps contained in subsection (1)(b),and that the operator or permittee proceed immediately thereafter with abatement of the imminent danger to the public or the imminent, significant environmental harm that is the subject of the cessation order in the most expeditious manner physically possible, in accordance with the Federal regulations at 30 CFR 843.11(b)(2). As

such, we are approving amended subsection (1) only to this extent.

Easements of Necessity for Abatement of Violations That Do Not Cause Imminent Danger to the Public or Significant, Imminent Environmental Harm

Kentucky has repealed existing new subsections (2) through (6), which we have previously declined to approve (66 FR at 33021), and replaced them with new subsections (2)–(7) (from page 3, line 24), which read as follows:

(2) If a permittee or operator has been issued a notice or order directing abatement of a violation other than one described in subsection (1) of this section, and the notice or order requires access to property for which the permittee or operator does not have the legal right of entry necessary in order to abate that violation, and the owner or legal occupant of that property has refused access, an easement of necessity is recognized on behalf of the permittee or operator, for the limited purpose of allowing a certified real estate appraiser or other qualified appraiser, chosen by the permittee or operator, to enter upon the property to which the owner or legal occupant has refused access in order for the appraiser to appraise the damages, including loss of use, that will result from the violation, as abated, and those that are likely to occur to the property if the permittee or operator is allowed to enter the property in order to abate the violation.

(3) (a) The easement for the limited purpose of allowing the appraisal shall be recognized and take effect when the operator or permittee:

1. Provides to the property owner or legal occupant a copy of the cabinet's order;

2. Provides to the property owner or legal occupant and cabinet a plan of remedial measures to abate the violation;

3. Provides to the property owner or legal occupant and cabinet an affidavit that he or she has been denied access to the property; and

4. Provides to the property owner or legal occupant a statement that he or she, the permittee or operator, will within seven (7) days of entry of the appraiser obtain an appraisal, by a certified real estate appraiser or other qualified appraiser, of the damages to the property including loss of use, that will result from the violation, as abated, and those that are likely to occur to the property when the permittee or operator enters the property in order to abate the violation, and that upon completion of the appraisal he or she will provide the appraisal to the property owner or legal occupant and pay the property owner or legal occupant the amount of the appraisal.

(a) When the easement takes effect, the property owner or legal occupant shall allow access for the permittee or operator's certified real estate appraiser or other qualified appraiser to conduct the appraisal.

(4) Following the effective date of the easement of necessity, the following procedure shall be followed with respect to the appraisal of the damages to the property that will result from the violation, as abated, and those that are likely to occur, under this subsection:

(a) The permittee or operator shall have an appraiser on the site and have his or her appraisal completed and submitted to the property owner or legal occupant within seven (7) days of the entry of the appraiser on the property.

(b) The property owner or legal occupant shall accept or reject this appraisal within three (3) days of receipt of the completed appraisal;

(c) If the property owner or legal occupant rejects this appraisal, he or she may hire a certified real estate appraiser or other qualified appraiser to appraise the damages to the property, including loss of use, that will result from the violation, as abated, and those that are likely to occur to the property if the permittee or operator is allowed to enter the property in order to abate the violation. Upon receipt of the invoice, the permittee or operator shall pay for the property owner or legal occupant's appraisal up to the amount he or she paid for his or her own appraisal; and (d) If the property owner or legal occupant has the appraisal done, he or she shall have it completed and provided to the permittee or operator within seven (7) days of receipt of the permittee or operator's appraisal.

(5) (a) If the property owner or legal occupant has an appraisal done, and if, based on his or her appraisal, an agreement is not reached on the appraised damages, the permittee or operator shall pay the property owner or legal occupant the amount of the permittee or operator's appraisal damages.

(b) If the property owner or legal occupant's appraisal damages are for more than the permittee or operator's, the permittee or operator shall pay the difference to the circuit clerk.

(c) The difference shall be placed in an interest-bearing account in a bank until final resolution of the matter by agreement or court or jury judgment.

(d) If the property owner or legal occupant is granted award of some or all of the difference, he or she shall also receive the interest on that portion of the difference.

(6) If the property owner or legal occupant does not accept or reject the permittee or operator's appraisal and offer of funds for damages, the operator or permittee shall pay the appraised damages to the Circuit Clerk within three (3) business days. These funds shall be placed in an interest-bearing account in a bank until resolution of the matter by agreement or court or jury judgment.

(7) In cases under subsection (2) of this section, when the procedures in subsections (4) and (5)(a) and (b) of this section, or subsections (4)(a) and (b) and (6) of this section, have been satisfied, the permittee or operator may enter the property to abate the violation.''

As is the case with subsection (1), discussed above, subsection (2) creates a real property damage appraisal procedure that is not provided for in either SMCRA or the Federal regulations. While the procedure does not, on its face, appear inconsistent with SMCRA or its accompanying regulations, we are again concerned that the appraisal process could interfere with the timely abatement of violations. With respect to violations that do not create imminent danger to the public or imminent, significant harm to the environment, the maximum abatement period, subject to exceptions not applicable here, is 90 days. See SMCRA section 521(a)(3), 30 U.S.C. 1271(a)(3); 30 CFR 843.12(c). Therefore, we find that subsection (2) is consistent with these provisions of SMCRA and the Federal regulations, but only to the extent that the property damage appraisal process created in this subsection does not delay the abatement of violations beyond 90 days after their issuance. As such, we are approving subsection (2) only to this extent.

IV. Summary and Disposition of Comments

Public Comments

We received one public comment from an industry group.

The Kentucky Coal Association (KCA) commented by letter dated July 16, 2002 (Administrative Record No. KY–1551). The comment indicated that as a representative of large and small, surface and underground operators in the Kentucky coalfields, the KCA supports the amendment as proposed by Kentucky.

Federal Agency Comments

Under 30 CFR 732.17(h)(11)(i) and section 503(b) of SMCRA, we requested comments on the amendment from various Federal agencies with an actual or potential interest in the Kentucky program (Administrative Record No. KY–1537).

We received three agency comments, two in response to our request and one as a response to the **Federal Register** notice of the proposed rule (67 FR 41653).

The U.S. Department of Labor's Mine Safety and Health Administration (MSHA) commented by letter dated July 18, 2002 (Administrative Record No. KY–1554). MSHA indicated that the proposed amendment has no apparent impact concerning its office.

The U.S. Fish and Wildlife Service (FWS) commented by letter dated July 15, 2002 (Administrative Record No. KY–1555). FWS indicated that the amendment does not appear to have the potential for resulting in negative environmental effects. As such, the FWS did not object to the proposed regulatory change.

The U.S. Department of Agriculture's Forest Service (USFS) commented by letter dated August 1, 2002

(Administrative Record No. KY–1557). USFS indicated that they do not believe that Federal authorization exists to access national forest land without Forest Service approval.

In response, we note that the amendment appears to be applicable whenever access to land upon which reclamation has been ordered is denied, whether the land be private or Federal. While we are sympathetic to USFS's concerns, we have found that the amendment, as construed above, is consistent with SMCRA and its implementing Federal regulations. In addition, no provision in SMCRA may be construed to vest in any regulatory authority the jurisdiction to adjudicate property title disputes, such as a dispute as to whether an easement of necessity is lawful if created on national forest land. See SMCRA Section 507(b)(9), 30 U.S.C. 1257(b)(9). Should a dispute occur over access to national forest land by a coal permittee or operator, the burden is on the permittee or operator to pursue all legal means to achieve reclamation. In any event, we trust that, in the great majority of cases, the USFS will be amenable to allowing access to national forest land upon which surface coal mining reclamation has been ordered by the Kentucky Regulatory Authority or by OSM.

Environmental Protection Agency (EPA) Concurrence and Comments

Under 30 CFR 732.17(h)(11)(ii), we are required to get a written concurrence from EPA for those provisions of the program amendment that relate to air or water quality standards issued under the authority of the Clean Water Act (33 U.S.C. 1251 *et seq.*) or the Clean Air Act (42 U.S.C. 7401 *et seq.*).

None of the revisions that Kentucky proposed to make in this amendment pertain to air or water quality standards. Therefore, we did not ask EPA to concur on the amendment.

State Historic Preservation Officer (SHPO) and the Advisory Council on Historic Preservation (ACHP)

Under 30 CFR 732.17(h)(4), we are required to request comments from the SHPO and ACHP on amendments that may have an effect on historic properties. None of the revisions that Kentucky proposed to make in this amendment pertain to or have a perceived effect on historic properties. Therefore, we did not specifically ask the SHPO or ACHP for comments.

V. Director's Decision

Based on the above findings we approve the Kentucky amendment, to the extent described, as submitted on April 25, 2002.

Effect of OSM's Decision

Section 503 of SMCRA provides that a State may not exercise jurisdiction under SMCRA unless the State program is approved by the Secretary.

Similarly, 30 CFR 732.17(a) requires that any change of an approved State program be submitted to OSM for review as a program amendment.

The Federal regulations at 30 CFR 732.17(g) prohibit any changes to approved State programs that are not approved by OSM. In the oversight of the Kentucky program, we will recognize only the statutes, regulations, and other materials we have approved, together with any consistent implementing policies, directives, and other materials. We will require Kentucky to enforce only approved provisions.

VI. Procedural Determination

Executive Order 12630—Takings

This rule does not have takings implications. This determination is based on the analysis performed for the counterpart Federal regulation.

Executive Order 12866—Regulatory Planning and Review

This rule is exempted from review by the Office of Management and Budget under Executive Order 12866.

Executive Order 12988—Civil Justice Reform

The Department of the Interior has conducted the reviews required by section 3 of Executive Order 12988 and has determined that this rule meets the applicable standards of subsections (a) and (b) of that section. However, these standards are not applicable to the actual language of State regulatory programs and program amendments because each program is drafted and promulgated by a specific State, not by OSM. Under sections 503 and 505 of SMCRA (30 U.S.C. 1253 and 1255) and the Federal regulations at 30 CFR 730.11, 732.15, and 732.17(h)(10), decisions on proposed State regulatory programs and program amendments submitted by the States must be based solely on a determination of whether the submittal is consistent with SMCRA and its implementing Federal regulations and whether the other requirements of 30 CFR Parts 730, 731, and 732 have been met.

Executive Order 13132—Federalism

This rule does not have Federalism implications. SMCRA delineates the roles of the Federal and State governments with regard to the regulation of surface coal mining and reclamation operations. One of the purposes of SMCRA is to ''establish a nationwide program to protect society and the environment from the adverse effects of surface coal mining operations.'' Section 503(a)(1) of SMCRA requires that State laws regulating surface coal mining and reclamation operations be ''in accordance with'' the requirements of SMCRA, and section 503(a)(7) requires that State programs contain rules and regulations ''consistent with'' regulations issued by the Secretary pursuant to SMCRA.

Executive Order 13211—Regulations That Significantly Affect The Supply, Distribution, or Use of Energy

On May 18, 2001, the President issued Executive Order 13211 which requires agencies to prepare a Statement of Energy Effects for a rule that is (1) considered significant under Executive Order 12866, and (2) likely to have a significant adverse effect on the supply, distribution, or use of energy. Because this rule is exempt from review under Executive Order 12866 and is not expected to have a significant adverse effect on the supply, distribution, or use of energy, a Statement of Energy Effects is not required.

National Environmental Policy Act

This rule does not require an environmental impact statement because section 702(d) of SMCRA (30 U.S.C. 1292(d)) provides that agency decisions on proposed State regulatory program provisions do not constitute major Federal actions within the meaning of section 102(2)(C) of the National Environmental Policy Act (42 U.S.C. 4332(2)(C)).

Paperwork Reduction Act

This rule does not contain information collection requirements that require approval by OMB under the Paperwork Reduction Act (44 U.S.C. 3507 *et seq.*).

Regulatory Flexibility Act

The Department of the Interior certifies that this rule will not have a significant economic impact on a substantial number of small entities under the Regulatory Flexibility Act (5 U.S.C. 601 *et seq.*). The State submittal, which is the subject of this rule, is based upon counterpart Federal regulations for which an economic analysis was prepared and certification made that such regulations would not have a significant economic effect upon a substantial number of small entities. In

making the determination as to whether this rule would have a significant economic impact, the Department relied upon the data and assumptions for the counterpart Federal regulations.

Small Business Regulatory Enforcement Fairness Act

This rule is not a major rule under 5 U.S.C. 804(2), the Small Business Regulatory Enforcement Fairness Act. This rule: (a) Does not have an annual effect on the economy of $100 million; (b) Will not cause a major increase in costs or prices for consumers, individual industries, Federal, State, or local government agencies, or geographic regions; and (c) Does not have significant adverse effects on competition, employment, investment, productivity, innovation, or the ability of U.S.-based enterprises to compete with foreign-based enterprises. This determination is based upon the fact that the State submittal that is the subject of this rule is based upon counterpart Federal regulations for which an analysis was prepared and a determination made that the Federal regulation was not considered a major rule.

Unfunded Mandates

This rule will not impose an unfunded mandate on State, local, or tribal governments or the private sector of $100 million or more in any given year. This determination is based upon the fact that the State submittal, which is the subject of this rule, is based upon counterpart Federal regulations for which an analysis was prepared and a determination made that the Federal regulation did not impose an unfunded mandate.

List of Subjects in 30 CFR Part 917

Intergovernmental relations, Surface mining, Underground mining.

Dated: October 8, 2002.

Allen D. Klein,

Regional Director, Appalachian Regional Coordinating Center.

For the reasons set out in the preamble, 30 CFR 917 is amended as set forth below:

PART 917—KENTUCKY

1. The authority citation for part 917 continues to read as follows:

Authority: 30 U.S.C. 1201 *et seq.*

2. Section 917.15 is amended in the table by adding a new entry in chronological order by November 6, 2002 to read as follows:

§ 917.15 Approval of Kentucky regulatory program amendments.

* * * * *

Original amendment submission date	Date of final publication	Citation/description
*	*	*
April 25, 2002	November 6, 2002	2002 HB 809, Kentucky Revised Statutes at Chapter 350.

[FR Doc. 02–28198 Filed 11–5–02; 8:45 am]

BILLING CODE 4310–05–P

DEPARTMENT OF THE INTERIOR

Office of Surface Mining Reclamation and Enforcement

30 CFR Part 938

[PA–136–FOR]

Pennsylvania Regulatory Program

AGENCY: Office of Surface Mining Reclamation and Enforcement, Interior.

ACTION: Final rule; approval of amendment.

SUMMARY: We are approving a proposed amendment to the Pennsylvania regulatory program (the ''Pennsylvania program'') under the Surface Mining Control and Reclamation Act of 1977 (SMCRA or the Act). Pennsylvania proposed to revise its program at 25 Pa. Code Sections 86.37(a)(5), 87.160(a), 88.138(a), 88.231(a), 88.335(a), and 90.134(a) about criteria for permit approval or denial and for performance standards for retention of roads following completion of surface mining activities. Pennsylvania intended to revise its program to be consistent with the corresponding Federal regulations and SMCRA, and to clarify ambiguities.

EFFECTIVE DATE: November 6, 2002.

FOR FURTHER INFORMATION CONTACT: George Rieger, Telephone: (717) 782–4036. Email: *grieger@osmre.gov*.

SUPPLEMENTARY INFORMATION:

I. Background on the Pennsylvania Program
II. Submission of the Proposed Amendment
III. OSM's Findings
IV. Summary and Disposition of Comments
V. OSM's Decision
VI. Procedural Determinations

I. Background on the Pennsylvania Program

Section 503(a) of the Act permits a State to assume primacy for the regulation of surface coal mining and reclamation operations on non-Federal and non-Indian lands within its borders by demonstrating that its State program includes, among other things, ''a State law which provides for the regulation of surface coal mining and reclamation operations in accordance with the requirements of the Act * * *; and rules and regulations consistent with regulations issued by the Secretary pursuant to the Act.'' See 30 U.S.C. 1253(a)(1) and (7). On the basis of these criteria, the Secretary of the Interior conditionally approved the Pennsylvania program on July 30, 1982. You can find background information on the Pennsylvania program, including the Secretary's findings, the disposition of comments, and conditions of approval in the July 30, 1982, **Federal Register** (47 FR 33050). You can also find later actions concerning Pennsylvania's program and program amendments at 30 CFR 938.11, 938.12, 938.15 and 938.16.

II. Submission of the Proposed Amendment

By letter dated February 25, 2002, Pennsylvania sent us an amendment to its program (Administrative Record No. PA 889.00) under SMCRA (30 U.S.C. 1201 *et seq.*). Pennsylvania sent the amendment in response to the required program amendment at 30 C.F.R. 938.16(gggg) and to include changes made at its own initiative.

We announced receipt of the proposed amendment in the April 16, 2002, **Federal Register** (67 FR 18518). In the same document, we opened the public comment period and provided an opportunity for a public hearing or meeting on the amendments adequacy. We did not hold a public hearing or meeting because no one requested one. The public comment period ended on May 16, 2002. We did not receive any comments.

III. OSM's Findings

Following are the findings we made concerning the amendment under SMCRA and the Federal regulations at

30 CFR 732.15 and 732.17. We are approving the amendment.

a. Revisions to Pennsylvania's Regulations That Have the Same Meaning as the Corresponding Provisions of the Federal Regulations

In response to the required amendment found at 30 CFR 938.16(gggg), Pennsylvania proposed a revision to 25 Pa. Code 90.134(a). The proposed amendment contains language making the rule similar to the corresponding sections of the Federal regulations.

30 CFR 938.16(gggg) requires Pennsylvania to amend its performance standards for coal refuse disposal by requiring that haul roads and access roads be designed, constructed, and maintained to control or prevent erosion. Pennsylvania proposed to satisfy this required amendment by adding the phrase, ''erosion and'' to 25 Pa. Code 90.134(a). The language of the section now reads, ''[h]aul roads and access roads shall be designed, constructed and maintained to control or prevent: erosion and contributions of sediment to streams or runoff outside the affected area * * *'' Since Pennsylvania added the required language, we find that the proposed rule satisfies the required amendment and are therefore approving the amendment.

We are also approving the State's proposed changes to 25 Pa. Code 86.37, which contains criteria for permit approval or denial. The current language of 86.37(a)(5) requires that the ''proposed permit area'' exclude several enumerated categories.

The amendment we are approving replaces the phrase ''the proposed permit area'' with ''the area covered by the operator's bond and upon which the operator proposes to conduct surface mining activities within the boundary of the proposed surface or coal mining activities permit.'' Thus, the issue presented by this proposed amendment is whether the proposed language is no less effective than the Federal regulations at 30 CFR 773.15(c), which provide, as a precondition to permit approval, that the ''permit area'' not include certain protected lands. Based on the following discussion, we find that the proposed language is no less effective than its Federal counterpart.

The Federal definition of ''permit area'' is ''the area of land, indicated on the approved map submitted by the operator with his or her application, required to be covered by the operator's performance bond under subchapter J of this chapter and which shall include the area of land upon which the operator proposes to conduct surface coal mining and reclamation operations under the permit, including all disturbed areas; provided that areas adequately bonded under another valid permit may be excluded from the permit area.'' 30 CFR 701.5. Like the Federal definition, Pennsylvania's proposed amendment includes the area covered by an operator's bond and upon which surface coal mining and reclamation operations will be conducted as designated in the permit. However, unlike the Federal definition, the proposed language does not explicitly include ''all disturbed areas.''

Although the proposed language does not explicitly cover all disturbed areas, it implicitly includes such areas by including the area covered by the operator's bond. Under 25 Pa. Code 86.143(b), an operator's bond must cover all disturbed areas. It states that ''[a]n operator may not disturb surface acreage * * * prior to receipt of approval from the Department of a bond and issuance of a permit covering the surface acreage to be affected.'' Thus, all areas to be disturbed must be covered by a bond. Further, 25 Pa. Code 86.143(c) provides that liability on the bond shall cover activities within the permit area as well as ''effects resulting from the mining of the permit area * * *'' Therefore, because the proposed amendment refers to an area of land that is as inclusive as the ''permit area,'' as defined in the Federal regulation, the amendment is no less effective than the Federal regulations at 30 CFR 773.15(c) and can be approved.

b. Deletions of Pennsylvania Regulatory Provisions With No Corresponding Federal Regulations or Statutes

We are approving Pennsylvania's proposed change regarding performance standards for haul roads and access roads. The State proposed to amend its regulations at 25 Pa. Code Sections 87.160(a), 88.138(a), 88.231(a), 88.335(a), and 90.134(a) by removing the requirement that a haul road's or an access road's maintenance plan must be approved as part of the postmining land use before the road can be retained at the conclusion of mining activities. We are approving the proposed amendment because no Federal statutory or regulatory requirement exists mandating that a maintenance plan for haul or access roads be approved as part of a postmining land use.

30 CFR 780.37(a) and 30 CFR 784.24(a) require that each applicant for a surface coal mining and reclamation permit submit plans and drawings for each road to be constructed, used, or maintained within the permit area. These requirements include plans to remove and reclaim each road not to be ''retained under an approved postmining land use.'' 30 CFR 780.37(a)(6), 784.24(a)(6). Thus, while these Federal provisions imply that a road to be retained after mining and reclamation must be approved as part of the postmining land use, they do not require that a maintenance plan for such road be approved.

Similarly, 30 CFR 816.150(f) and 817.150(f) set forth reclamation requirements for roads not being retained under an approved postmining land use. Like 30 CFR 780.37(a) and 784.24(a), 30 CFR 816.150(f) and 817.150(f) only refer to roads, not any associated maintenance plans, as being approved as part of the postmining land use. Since neither SMCRA or its implementing regulations require a road maintenance plan to be approved as part of a postmining land use, the removal of such requirement by Pennsylvania does not render its program inconsistent with, less stringent than, or less effective than corresponding Federal law or regulations. Therefore, we are approving the amendment.

IV. Summary and Disposition of Comments

Public Comments

We asked for public comments on the amendment in an April 16, 2002 **Federal Register** notice, 67 FR 18518, but did not receive any specific comments. However, the Pennsylvania Coal Association (PCA) generally supported the amendment and urged us to approve it. It noted that the amendment will allow efficient and effective permitting and haul road maintenance practices.

Federal Agency Comments

Under 30 CFR 732.17(h)(11)(i) and section 503(b) of SMCRA, we requested comments on the amendment from various Federal agencies with an actual or potential interest in the Pennsylvania program (Administrative Record No. 889.01). The Mine Safety and Health Administration merely noted that the modifications in the amendment appeared to be minor. The U.S. Environmental Protection Agency (EPA) stated that no apparent inconsistencies exist between the amendment and the Clean Water Act or other statutes or regulations under its jurisdiction.

(EPA) Concurrence

Under 30 CFR 732.17(h)(11)(ii), we are required to get a written concurrence from EPA for those provisions of the program amendment that relate to air or water quality standards issued under

the authority of the Clean Water Act (33 U.S.C. 1251 *et seq.*) or the Clean Air Act (42 U.S.C. 7401 *et seq.*). We did not seek EPA concurrence on this amendment because we determined that it contains no such provisions.

State Historic Preservation Officer (SHPO) and the Advisory Council on Historic Preservation (ACHP)

Under 30 CFR 732.17(h)(4), we are required to request comments from the SHPO and ACHP on amendments that may have an effect on historic properties. On March 1, 2002, we requested comments on Pennsylvania's amendment (Administrative Record No. 889.01), but neither the SHPO nor the ACHP responded to our request.

V. OSM's Decision

Based on the above findings, we approve the amendment Pennsylvania sent us. To implement this decision, we are amending the Federal regulations at 30 CFR Part 938, which codify decisions concerning the Pennsylvania program. We find that good cause exists under 5 U.S.C. 553(d)(3) to make this final rule effective immediately. Section 503(a) of SMCRA requires that the Pennsylvania program demonstrate that the State has the capability of carrying out the provisions of the Act and meeting its purposes. Making this regulation effective immediately will expedite that process. SMCRA requires consistency of State and Federal standards.

VI. Procedural Determinations

Executive Order 12630—Takings

This rule does not have takings implications. This determination is based on the analysis performed for the counterpart Federal regulation.

Executive Order 12866—Regulatory Planning and Review

This rule is exempted from review by the Office of Management and Budget under Executive Order 12866.

Executive Order 12988—Civil Justice Reform

The Department of the Interior has conducted the reviews required by section 3 of Executive Order 12988 and has determined that this rule meets the applicable standards of subsections (a) and (b) of that section. However, these standards are not applicable to the actual language of State regulatory programs and program amendments because each program is drafted and promulgated by a specific State, not by OSM. Under sections 503 and 505 of SMCRA (30 U.S.C. 1253 and 1255) and the Federal regulations at 30 CFR 730.11, 732.15, and 732.17(h)(10), decisions on proposed State regulatory programs and program amendments submitted by the States must be based solely on a determination of whether the submittal is consistent with SMCRA and its implementing Federal regulations and whether the other requirements of 30 CFR Parts 730, 731, and 732 have been met.

Executive Order 13132—Federalism

This rule does not have Federalism implications. SMCRA delineates the roles of the Federal and State governments with regard to the regulation of surface coal mining and reclamation operations. One of the purposes of SMCRA is to ''establish a nationwide program to protect society and the environment from the adverse effects of surface coal mining operations.'' Section 503(a)(1) of SMCRA requires that State laws regulating surface coal mining and reclamation operations be ''in accordance with'' the requirements of SMCRA, and section 503(a)(7) requires that State programs contain rules and regulations ''consistent with'' regulations issued by the Secretary pursuant to SMCRA.

Executive Order 13211—Regulations That Significantly Affect the Supply, Distribution, or Use of Energy

On May 18, 2001, the President issued Executive Order 13211 which requires agencies to prepare a Statement of Energy Effects for a rule that is (1) considered significant under Executive Order 12866, and (2) likely to have a significant adverse effect on the supply, distribution, or use of energy. Because this rule is exempt from review under Executive Order 12866 and is not expected to have a significant adverse effect on the supply, distribution, or use of energy, a Statement of Energy Effects is not required.

National Environmental Policy Act

This rule does not require an environmental impact statement because section 702(d) of SMCRA (30 U.S.C. 1292(d)) provides that agency decisions on proposed State regulatory program provisions do not constitute major Federal actions within the meaning of section 102(2)(C) of the National Environmental Policy Act (42 U.S.C. 4332(2)(C)).

Paperwork Reduction Act

This rule does not contain information collection requirements that require approval by OMB under the Paperwork Reduction Act (44 U.S.C. 3507 *et seq.*).

Regulatory Flexibility Act

The Department of the Interior certifies that this rule will not have a significant economic impact on a substantial number of small entities under the Regulatory Flexibility Act (5 U.S.C. 601 *et seq.*). The State submittal, which is the subject of this rule, is based upon counterpart Federal regulations for which an economic analysis was prepared and certification made that such regulations would not have a significant economic effect upon a substantial number of small entities. In making the determination as to whether this rule would have a significant economic impact, the Department relied upon the data and assumptions for the counterpart Federal regulations.

Small Business Regulatory Enforcement Fairness Act

This rule is not a major rule under 5 U.S.C. 804(2), the Small Business Regulatory Enforcement Fairness Act. This rule: (a) Does not have an annual effect on the economy of $100 million; (b) Will not cause a major increase in costs or prices for consumers, individual industries, Federal, State, or local government agencies, or geographic regions; and (c) Does not have significant adverse effects on competition, employment, investment, productivity, innovation, or the ability of U.S.-based enterprises to compete with foreign-based enterprises. This determination is based upon the fact that the State submittal which is the subject of this rule is based upon counterpart Federal regulations for which an analysis was prepared and a determination made that the Federal regulation was not considered a major rule.

Unfunded Mandates

This rule will not impose an unfunded mandate on State, local, or tribal governments or the private sector of $100 million or more in any given year. This determination is based upon the fact that the State submittal, which is the subject of this rule, is based upon counterpart Federal regulations for which an analysis was prepared and a determination made that the Federal regulation did not impose an unfunded mandate.

List of Subjects in 30 CFR Part 938

Intergovernmental relations, Surface mining, Underground mining.

Dated: September 4, 2002.

Allen D. Klein,

Regional Director, Appalachian Regional Coordinating Center.

For the reasons set out in the preamble, 30 CFR Part 938 is amended as set forth below:

PART 938—PENNSYLVANIA

1. The authority citation for Part 938 continues to read as follows:

Authority: 30 U.S.C. 1201 *et seq.*

2. Section 938.15 is amended in the table by adding a new entry in chronological order by November 6, 2002 to read as follows:

§ 938.15 Approval of Pennsylvania regulatory program amendments.

* * * * *

Original amendment submission date	Date of final publication	Citation/description
*	*	*
February 25, 2002	November 6, 2002	25 Pa. Code 86.37, 87.160, 88.138, 88.231, 88.335, 90.134, 87.160.

§ 938.16 [Amended]

3. Section 938.16 is amended by removing and reserving paragraph (gggg).

[FR Doc. 02–28200 Filed 11–5–02; 8:45 am]

BILLING CODE 4310–05–P

DEPARTMENT OF THE INTERIOR

Office of Surface Mining Reclamation and Enforcement

30 CFR Part 943

[SPATS No. TX–048–FOR]

Texas Regulatory Program

AGENCY: Office of Surface Mining Reclamation and Enforcement, Interior.

ACTION: Final rule; approval of amendment.

SUMMARY: We, the Office of Surface Mining Reclamation and Enforcement (OSM), are approving an amendment to the Texas regulatory program (Texas program) under the Surface Mining Control and Reclamation Act of 1977 (SMCRA or the Act). Texas proposed revisions to its regulations concerning valid existing rights. Texas intends to revise its program to be consistent with the corresponding Federal regulations.

EFFECTIVE DATE: November 6, 2002.

FOR FURTHER INFORMATION CONTACT: Michael C. Wolfrom, Director, Tulsa Field Office, Office of Surface Mining, 5100 East Skelly Drive, Suite 470, Tulsa, Oklahoma 74135–6548. Telephone: (918) 581–6430. Internet: *mwolfrom@osmre.gov*.

SUPPLEMENTARY INFORMATION:

I. Background on the Texas Program
II. Submission of the Proposed Amendment
III. OSM's Findings
IV. Summary and Disposition of Comments
V. OSM's Decision
VI. Procedural Determinations

I. Background on the Texas Program

Section 503(a) of the Act permits a State to assume primacy for the regulation of surface coal mining and reclamation operations on non-Federal and non-Indian lands within its borders by demonstrating that its program includes, among other things, ''* * * a State law which provides for the regulation of surface coal mining and reclamation operations in accordance with the requirements of the Act * * *; and rules and regulations consistent with regulations issued by the Secretary pursuant to the Act.'' *See* 30 U.S.C. 1253(a)(1) and (7). On the basis of these criteria, the Secretary of the Interior conditionally approved the Texas program on February 16, 1980. You can find background information on the Texas program, including the Secretary's findings, the disposition of comments, and the conditions of approval in the February 27, 1980, **Federal Register** (45 FR 12998). You can find later actions concerning the Texas program at 30 CFR 943.10, 943.15, and 943.16.

II. Submission of the Proposed Amendment

By letter dated July 25, 2001 (Administrative Record No. TX–653.02), Texas sent us an amendment to its program under SMCRA (30 U.S.C. 1201 *et seq.*). Texas sent the amendment in response to our letter dated August 23, 2000 (Administrative Record No. TX–653), that we sent to Texas under 30 CFR 732.17(c). Texas proposed to amend Title 16 Texas Administrative Code Chapter 12.

We announced receipt of the amendment in the September 20, 2001, **Federal Register** (66 FR 48396). In the same document, we opened the public comment period and provided an opportunity for a public hearing or meeting on the adequacy of the proposed amendment. The public comment period closed on October 22, 2001. We did not receive any comments and did not hold a public hearing or meeting because no one requested one.

During our review of the amendment, we identified incorrect reference citations and concerns relating to the definition of ''valid existing rights.'' We notified Texas of these concerns by an e-mail dated September 24, 2001, and a letter dated June 14, 2002 (Administrative Record Nos. TX–653.04 and TX–653.07, respectively). By letters dated October 22, 2001, June 5, 2002, and June 18, 2002 (Administrative Record Nos. TX–653.05, TX–653.06, and TX–653.08, respectively), Texas sent us additional explanatory information and revisions to its program amendment.

Based upon Texas' additional explanatory information and revisions to its amendment, we reopened the public comment period in the August 13, 2002, **Federal Register** (67 FR 52664). The public comment period closed on August 28, 2002. We did not receive any comments.

III. OSM's Findings

Following are the findings we made concerning the amendment under SMCRA and the Federal regulations at 30 CFR 732.15 and 732.17. We are approving the amendment. Any revisions that we do not specifically discuss below concern nonsubstantive wording or editorial changes, or revised cross-references and paragraph notations to reflect organizational changes resulting from this amendment.

A. Revisions to Texas' Regulations That Have the Same Meaning as the Corresponding Provisions of the Federal Regulations

The State regulations listed below contain language that is the same as or similar to the corresponding sections of the Federal regulations. Differences between the State regulations and the Federal regulations are minor.

Topic	State regulation	Federal counterpart regulation
Areas where surface coal mining operations are prohibited or limited.	Section 12.71(a), Section 12.71(b)	30 CFR 761.11, 30 CFR 761.12.
Procedures for compatibility findings, public road closures and relocations, buffer zones, and valid existing rights determinations.	Section 12.72(a), Section 12.72(b), Section 12.72(c).	30 CFR 761.14, 30 CFR 761.15, 30 CFR 761.16.
Commission obligations at time of permit application review.	Section 12.73	30 CFR 761.17.
Applicability and restrictions on exploration on land designated as unsuitable for surface coal mining operations.	Section 12.77(a), Section 12.77(b)	30 CFR 762.14, 30 CFR 762.15.
General requirements: Exploration that will remove more than 250 tons of coal or that will occur on lands designated as unsuitable for surface coal mining operations.	Section 12.111(1)(H)	30 CFR 772.12(b)(14).
Applications: Approval or disapproval of exploration of more than 250 tons of coal or that will occur on lands designated as unsuitable for surface coal mining operations.	Section 12.112(b)(4)	30 CFR 772.12(d)(2)(iv).
Applications: Notice and hearing for exploration of more than 250 tons.	Section 12.113(a)	30 CFR 772.12(e)(1).
Relationship to areas designated unsuitable for mining (surface mining).	Section 12.118(a) and (c)	30 CFR 778.16(a) and (c).
Protection of public parks and historic places (surface mining).	Section 12.151(a)(2)	30 CFR 780.31(a)(2).
Relationship to areas designated unsuitable for mining (underground mining).	Section 12.158(a) and (c)	30 CFR 778.16(a) and (c).
Protection of public parks and historic places (underground mining).	Section 12.191(a)(2)	30 CFR 784.17(a)(2).
Public notices of filing of permit applications	Section 12.207(a)(5)	30 CFR 773.13(a)(1)(v).
Criteria for permit approval or disapproval	Section 12.216(4)(A)	30 CFR 773.15(c)(3)(ii).

Because the above State regulations have the same meaning as the corresponding Federal regulations, we find that they are no less effective than the Federal regulations. Therefore, we are approving them.

B. Texas Administrative Code (TAC) Section 12.3 Definitions

1. Texas proposed to remove its definition of ''surface coal mining operations which exist on the date of enactment'' found at TAC section 12.3(169). As a result of the removal of this definition, the State proposed to renumber the remaining definitions in this section. We are approving the removal of this definition and the subsequent renumbering of the remaining definitions because we removed the definition of ''surface coal mining operations which exist on the date of enactment'' from the Federal regulations at 30 CFR 761.5. Please see the **Federal Register** dated December 17, 1999 (64 FR 70831).

2. Texas proposed to revise its definition of ''valid existing rights'' found at TAC section 12.3(187) to be consistent with the corresponding Federal definition of ''valid existing rights.''

On December 17, 1999 (64 FR 70766), we published our final rule redefining the circumstances under which a person has valid existing rights to conduct surface coal mining operations on lands listed in section 522(e) of SMCRA. This section prohibits or restricts surface coal mining operations on certain lands. Our final rule included a revised definition of valid existing rights found at 30 CFR 761.5. In paragraph (a) of this revised definition, we added a clause clarifying that the provisions requiring the use of state law to interpret documents does not apply if federal law provides otherwise. The clause reads, ''unless Federal law provides otherwise.'' Texas' proposed definition of ''valid existing rights'' is substantively the same as the Federal definition, except that the State did not include this clause in its proposed definition. Though it is unlikely that Texas will have to make a determination of ''valid existing rights'' that will require the State to use applicable federal law to interpret documents relied upon to establish property rights, Texas sent us a letter dated June 18, 2002 (Administrative Record No. TX–653.08), clarifying that it will make any such determinations using the applicable federal law. Because Texas' proposed definition of ''valid existing rights'' is substantively the same as the Federal definition of ''valid existing rights,'' we are approving it.

C. TAC Section 12.74 Responsibility (Formerly Section 12.73)

Texas proposed to redesignate existing section 12.73 as new section 12.74. We are approving the redesignation because it does not change the content of the previously approved regulation in any way.

IV. Summary and Disposition of Comments

Public Comments

We asked for public comments on the amendment, but did not receive any.

Federal Agency Comments

Under 30 CFR 732.17(h)(11)(i) of the Federal regulations and section 503(b) of SMCRA, we requested comments on the amendment from various Federal agencies with an actual or potential interest in the Texas program (Administrative Record Nos. TX–653.03 and TX–653.10). We did not receive any comments.

Environmental Protection Agency (EPA)

Under 30 CFR 732.17(h)(11)(ii), we are required to get a written concurrence from EPA for those provisions of the program amendment that relate to air or water quality standards issued under the authority of the Clean Water Act (33 U.S.C. 1251 *et seq.*) or the Clean Air Act (42 U.S.C. 7401 *et seq.*). None of the revisions that Texas proposed to make in this amendment pertain to air or water quality standards. Therefore, we did not ask EPA to concur on the amendment.

Under 30 CFR 732.17(h)(11)(i), we requested comments on the amendment from the EPA (Administrative Record Nos. TX–653.03 and TX–653.10). The EPA did not respond to our request.

State Historical Preservation Officer (SHPO) and the Advisory Council on Historic Preservation (ACHP)

Under 30 CFR 732.17(h)(4), we are required to request comments from the SHPO and ACHP on amendments that may have an effect on historic properties. On August 6, 2001, we requested comments on Texas' amendment (Administrative Record Nos. TX–653.03 and TX–653.10), but neither responded to our request.

V. OSM's Decision

Based on the above findings, we approve the amendment as sent to us by Texas on July 25, 2001, and as revised on October 22, 2001, and June 5, 2002.

We approve the regulations that Texas proposed with the provision that they be published in identical form to the regulations sent to and reviewed by OSM and the public.

To implement this decision, we are amending the Federal regulations at 30 CFR part 943, which codify decisions concerning the Texas program. We find that good cause exists under 5 U.S.C. 553(d)(3) to make this final rule effective immediately. SMCRA requires that the State's program demonstrates that the State has the capability of carrying out the provisions of the Act and meeting its purposes. Making this rule effective immediately will expedite that process. SMCRA requires consistency of State and Federal standards.

VI. Procedural Determinations

Executive Order 12630—Takings

In this rule, the State is adopting valid existing rights standards that are similar to the standards in the Federal definition at 30 CFR 761.5. Therefore, this rule has the same takings implications as the Federal valid existing rights rule. The taking implications assessment for the Federal valid existing rights rule appears in Part XXIX.E. of the preamble to that rule. *See* 64 FR 70766, 70822–27, December 17, 1999.

Executive Order 12866—Regulatory Planning and Review

This rule is exempted from review by the Office of Management and Budget under Executive Order 12866.

Executive Order 12988—Civil Justice Reform

The Department of the Interior has conducted the reviews required by section 3 of Executive Order 12988 and has determined that this rule meets the applicable standards of subsections (a) and (b) of that section. However, these standards are not applicable to the actual language of State regulatory programs and program amendments because each program is drafted and promulgated by a specific State, not by OSM. Under sections 503 and 505 of SMCRA (30 U.S.C. 1253 and 1255) and the Federal regulations at 30 CFR 730.11, 732.15, and 732.17(h)(10), decisions on proposed State regulatory programs and program amendments submitted by the States must be based solely on a determination of whether the submittal is consistent with SMCRA and its implementing Federal regulations and whether the other requirements of 30 CFR parts 730, 731, and 732 have been met.

Executive Order 13132—Federalism

This rule does not have Federalism implications. SMCRA delineates the roles of the Federal and State governments with regard to the regulation of surface coal mining and reclamation operations. One of the purposes of SMCRA is to ''establish a nationwide program to protect society and the environment from the adverse effects of surface coal mining operations.'' Section 503(a)(1) of SMCRA requires that State laws regulating surface coal mining and reclamation operations be ''in accordance with'' the requirements of SMCRA, and section 503(a)(7) requires that State programs contain rules and regulations ''consistent with'' regulations issued by the Secretary pursuant to SMCRA.

Executive Order 13211—Regulations That Significantly Affect the Supply, Distribution, or Use of Energy

On May 18, 2001, the President issued Executive Order 13211 which requires agencies to prepare a Statement of Energy Effects for a rule that is (1) considered significant under Executive Order 12866, and (2) likely to have a significant adverse effect on the supply, distribution, or use of energy. Because this rule is exempt from review under Executive Order 12866 and is not expected to have a significant adverse effect on the supply, distribution, or use of energy, a Statement of Energy Effects is not required.

National Environmental Policy Act

This rule does not require an environmental impact statement because section 702(d) of SMCRA (30 U.S.C. 1292(d)) provides that agency decisions on proposed State regulatory program provisions do not constitute major Federal actions within the meaning of section 102(2)(C) of the National Environmental Policy Act (42 U.S.C. 4332(2)(C)).

Paperwork Reduction Act

This rule does not contain information collection requirements that require approval by the Office of Management and Budget under the Paperwork Reduction Act (44 U.S.C. 3507 *et seq.*).

Regulatory Flexibility Act

The Department of the Interior certifies that this rule will not have a significant economic impact on a substantial number of small entities under the Regulatory Flexibility Act (5 U.S.C. 601 *et seq.*). The State submittal, which is the subject of this rule, is based upon counterpart Federal regulations for which an economic analysis was prepared and certification made that such regulations would not have a significant economic effect upon a substantial number of small entities. In making the determination as to whether this rule would have a significant economic impact, the Department relied upon the data and assumptions for the counterpart Federal regulations.

Small Business Regulatory Enforcement Fairness Act

This rule is not a major rule under 5 U.S.C. 804(2), the Small Business Regulatory Enforcement Fairness Act. This rule: (a) Does not have an annual effect on the economy of $100 million; (b) Will not cause a major increase in costs or prices for consumers, individual industries, Federal, State, or local government agencies, or geographic regions; and (c) Does not have significant adverse effects on competition, employment, investment, productivity, innovation, or the ability of U.S.-based enterprises to compete with foreign-based enterprises. This determination is based upon the fact that the State submittal which is the subject of this rule is based upon counterpart Federal regulations for which an analysis was prepared and a determination made that the Federal regulation was not considered a major rule.

Unfunded Mandates

This rule will not impose an unfunded mandate on State, local, or

tribal governments or the private sector cost of $100 million or more in any given year. This determination is based upon the fact that the State submittal, which is the subject of this rule, is based upon counterpart Federal regulations for which an analysis was prepared and a determination made that the Federal regulation did not impose an unfunded mandate.

List of Subjects in 30 CFR Part 943

Intergovernmental relations, Surface mining, Underground mining.

Dated: September 20, 2002.

Charles E. Sandberg,

Acting Regional Director, Mid-Continent Regional Coordinating Center.

For the reasons set out in the preamble, 30 CFR Part 943 is amended as set forth below:

PART 943—TEXAS

1. The authority citation for Part 943 continues to read as follows:

Authority: 30 U.S.C. 1201 *et seq.*

2. Section 943.15 is amended in the table by adding a new entry in chronological order by ''Date of final publication'' to read as follows:

§ 943.15 Approval of Texas regulatory program amendments.

* * * * *

Original amendment submission date	Date of final publication	Citation/description
*	*	*
July 25, 2001	November 6, 2002	Sections 12.3(169) definition of ''surface coal mining operations which exist on the date of enactment [removed] and 12.3(187) definition of ''valid existing rights;'' 12.71–.74; 12.77; 12.111(1)(H); 12.112(b)(4); 12.113(a); 12.118(a) and (c); 12.151(a)(2); 12.158(a) and (c); 12.191(a)(2); 12.207(a)(5); and 12.216(4)(A).

[FR Doc. 02–28199 Filed 11–5–02; 8:45 am]

BILLING CODE 4310–05–P

DEPARTMENT OF THE INTERIOR

Office of Surface Mining Reclamation and Enforcement

30 CFR Part 944

[SPATS No. UT–041–FOR]

Utah Regulatory Program

AGENCY: Office of Surface Mining Reclamation and Enforcement (OSM), Interior.

ACTION: Final rule; approval of amendment.

SUMMARY: We are approving a proposed amendment to the Utah regulatory program (the ''Utah program'') under the Surface Mining Control and Reclamation Act of 1977 (SMCRA or the Act). Utah proposed revisions to and additions of rules about water replacement, blaster certification, standards for surety companies, and inspection and enforcement. Utah revised its program to be consistent with the corresponding Federal regulations, provide additional safeguards, clarify ambiguities, and improve operational efficiency.

EFFECTIVE DATE: November 6, 2002.

FOR FURTHER INFORMATION CONTACT: James F. Fulton, Chief, Denver Field Division, telephone: (303) 844–1400, extension 1242; Internet address: *jfulton@osmre.gov.*

SUPPLEMENTARY INFORMATION:

I. Background on the Utah Program
II. Submission of the Proposed Amendment
III. OSM's Findings
IV. Summary and Disposition of Comments
V. OSM's Decision
VI. Procedural Determinations

I. Background on the Utah Program

Section 503(a) of the Act permits a State to assume primacy for the regulation of surface coal mining and reclamation operations on non-Federal and non-Indian lands within its borders by demonstrating that its State program includes, among other things, ''a State law which provides for the regulation of surface coal mining and reclamation operations in accordance with the requirements of this Act; * * * and rules and regulations consistent with regulations issued by the Secretary pursuant to this Act.'' *See* 30 U.S.C. 1253(a)(1) and (7). On the basis of these criteria, the Secretary of the Interior conditionally approved the Utah program on January 21, 1981. You can find background information on the Utah program, including the Secretary's findings, the disposition of comments, and conditions of approval of the Utah program in the January 21, 1981, **Federal Register** (46 FR 5899). You can also find later actions concerning Utah's program and program amendments at 30 CFR 944.15 and 944.30.

II. Submission of the Proposed Amendment

By letter dated March 28, 2002, Utah sent us an amendment to its program (UT–041–FOR, Administrative Record No. UT–1160) under SMCRA (30 U.S.C. 1201 *et seq.*). Utah's original submittal included two separate proposed amendments. In a telephone conversation on April 2, 2002 (Administrative Record No. UT–1161), Utah agreed to our proposal to combine the two amendments into one amendment designated UT–041–FOR. Utah sent the amendment at its own initiative. The provisions of the Utah Administrative Rule (Utah Admin. R.) that Utah proposed to revise and add were: In its definitions at Utah Admin. R. 645–100–200, Utah proposed to remove the definition of ''State-Appropriated Water Supply'' and replace it with a new combined definition of the terms ''Water Supply,'' ''State-appropriated Water,'' and ''State-appropriated Water Supply,'' all of which it intends to be synonymous and to mean ''state appropriated water rights which are recognized by the Utah Constitution or Utah Code;'' at Utah Admin. R. 645–105–314, Utah proposed to add a new blaster certification rule that would require candidates for certification to be twenty-one years of age or older; at Utah Admin. R. 645–301–525.130, Utah proposed to add a new provision requiring a permit applicant to give a copy of the pre-subsidence survey and any technical assessment or engineering evaluation to the water conservancy district, if any, where the mine is located; at Utah Admin. R. 645–301–525.700, the State proposed to add a new requirement that the underground mine operator mail a notification of proposed mining to the water conservancy district, if any, in which the mine is located; at Utah Admin. R. 645–301–728.350, the State proposed to revise its rule to require that determinations of probable hydrologic consequences include

findings on whether underground coal mining and reclamation activities conducted after October 24, 1992, may result in contamination, diminution, or interruption of ''State-appropriated Water'' in existence within the proposed permit or adjacent areas at the time the application is submitted, and to delete the existing phrase ''and used for legitimate purposes within the permit or adjacent areas * * *'' at the end of that sentence; at Utah Admin. R. 645–301–860.110 through ''860.112, Utah proposed to add new requirements for companies that issue surety bonds to meet to provide the State with standards by which to judge their financial stability; at Utah Admin. R. 645–400–162 and 645–400–381, the State proposed to change its existing references to section 40–10–22 of the Utah Code Annotated (UCA) to reference UCA 40–10–19 so on-site compliance conferences will not be considered inspections in the context of that statutory provision; in the enforcement rule at Utah Admin. R. 645–400–319, Utah proposed to change the existing reference to Utah Admin. R. 645–300–147 to cite Utah Admin. R. 645–300–148 instead, which requires permittees to submit ownership and control information to the Division of Oil, Gas and Mining (DOGM); and at Utah Admin. R. 645–400–322, the State proposed to add the phrase ''* * * which does not create an imminent danger or harm for which a * * *'' to complete the sentence and characterize situations in which it will issue notices of violation rather than cessation orders.

We announced receipt of the proposed amendment in the May 17, 2002, **Federal Register** (67 FR 35077). In the same document, we opened the public comment period and provided an opportunity for a public hearing or meeting on the amendment's adequacy (Administrative Record No. UT–1163). We did not hold a public hearing or meeting because no one requested one. The public comment period ended on June 17, 2002. We received comments from one State agency and two Federal agencies.

III. OSM's Findings

Following are the findings we made concerning the amendment under SMCRA and the Federal regulations at 30 CFR 732.15 and 732.17. We are approving the amendment.

A. Revisions to Utah's Rules That Have the Same Meaning as the Corresponding Provisions of the Federal Regulations

Utah's proposed revisions to the following rules contain wording that is the same as or similar to the corresponding sections of the Federal regulations (which are noted in parentheses):

1. Utah Admin. R. 645–400–162 and 645–400–381, changes existing references to section 40–10–22 of the Utah Code Annotated (UCA) to reference UCA section 40–10–19 instead, so on-site compliance conferences will not be considered inspections in the context of that statutory provision (30 CFR 840.16(b) and 843.20(a), respectively);

2. Utah Admin. R. 645–400–319, changes the existing reference to Utah Admin. R. 645–300–147 to reference 645–300–148 instead, which requires permittees to submit ownership and control information to DOGM (30 CFR 843.11(g)); and

3. Utah Admin. R. 645–400–322, adds the phrase ''* * * which does not create an imminent danger or harm for which a * * *'' to complete the sentence and characterize situations in which DOGM will issue notices of violation rather than cessation orders (30 CFR 843.12(a)(2)).

Because these proposed rules contain wording that is the same as or similar to the corresponding Federal regulations, we find that they are no less effective than the corresponding Federal regulations.

B. Revisions to Utah's Rules That Are Not the Same as the Corresponding Provisions of the Federal Regulations

1. Utah Admin. R. 645–100–200, Definition of ''Water Supply,'' ''State-appropriated Water,'' and ''State-Appropriated Water Supply''

Utah proposes to delete its existing definition of ''State-appropriated water supply'' and replace it with a combined definition of the terms ''water supply,'' ''State-appropriated water,'' and ''State-appropriated water supply.'' Under the proposed combined definition, the three terms '' * * * are all synonymous and mean, for the purposes of the R645 Rules, state appropriated water rights which are recognized by the Utah Constitution or Utah Code.'' The Federal counterpart term ''drinking, domestic or residential water supply'' is defined at 30 CFR 701.5.

In the December 4, 2001, **Federal Register** (66 FR 62917), we approved the existing definition of ''State-appropriated water supply'' in amendment UT–037–FOR. We found Utah's definition of that term was no less effective than the Federal definition of the counterpart term ''drinking, domestic, or residential water supply.'' As we approved it, ''State-Appropriated Water Supply'' meant ''State-created water rights which are recognized under the provisions of the Utah Code.'' Our approval noted that Utah's definition was based on its use of the term ''State-appropriated water'' at UCA 40–10–18(15)(c). ''State-appropriated water'' is not defined in title 40 of Utah's Code. However, in a January 29, 1997, letter (Administrative Record No. UT–1094), Utah asserted that use of the term ''State-appropriated water'' in its Code provides broader water replacement protection than the Federal term because the State's term includes the ''* * * universe of legal water uses by the universe of legal water users * * *.'' As such, ''State-appropriated water'' includes drinking, domestic, or residential water supplies from wells or springs and water used for other purposes, including agricultural irrigation and industrial water. The Federal term is limited to drinking, domestic or residential water supply from a well or spring unless the water supply is for direct human consumption, human sanitation, or domestic use. We accepted Utah's explanation in our August 4, 1997, approval of UT–035–FOR (62 FR 41845) and relied on it, in part, for our approval of Utah's definition of ''State-appropriated water supply'' in amendment UT–037–FOR (*Id.*)

Our approval of Utah's definition of ''State-appropriated water supply'' in UT–037–FOR also was based on information the State provided to us in response to a question we asked in our October 1, 1998, letter describing our concerns for that amendment (Administrative Record No. 1125). We asked Utah to further clarify its interpretation of the term ''State-appropriated water supply'' to address whether legal water rights exist in the State that are recognized by Utah law but are not created by the State. Utah responded to our questions in an October 31, 2000, letter (Administrative Record No. UT–1145). As we noted in our approval of UT–037–FOR (*Id.*, at 62928), Utah said the provisions of UCA 73–5–13 recognize water claims established by diversion (''diligence rights'') before Utah became a State and before it established the State Engineer's Office. The State's response concluded that ''State-appropriated water'' includes territorial water rights. Because the definition of the term ''State-appropriated water supplies'' as proposed in amendment UT–037–FOR was based on Utah's interpretation of ''State-appropriated water,'' we found it to be no less effective than the Federal term ''drinking, domestic or residential water supply'' and approved it.

Utah's combined definition of ''water supply,'' ''State-appropriated water,'' and ''State-appropriated water supply'' as proposed in this amendment refers to State-appropriated water rights recognized by the Utah Constitution and the Utah Code. Replacing the phrase ''State-created water rights'' in the existing definition with the phrase ''state appropriated water rights'' in the proposed definition accommodates the assertion that water rights existing before Utah became a State were not created by the State but nevertheless are recognized by Utah law. Further, DOGM explained that referring to water rights recognized by the Utah Constitution gives additional support to recognizing existing water rights that were established before Utah became a State (Administrative Record No. UT–1167). It also recognizes that mining might affect those water rights.

We searched Utah's R645 rules for the terms ''water supply,'' ''State-appropriated water,'' and ''State-appropriated water supply'' to determine if there are any uses of those terms that would conflict with the proposed definition. Those terms appear separately or together in definitions of: ''Community or industrial building;'' ''essential hydrologic functions;'' ''developed water resources'' as referred to in the definition of ''land use;'' ''renewable resource lands'' as used for the purposes of Utah Admin. R. 645–103; ''replacement of water supply;'' and ''State-appropriated water supply'' (to be replaced by the proposed combined definition). Those terms also appear separately or in combination at: Utah Admin. R. 645–103–322.300; –525.110, 120, and 130; –525.214; –525.400 and 480; –525.550; –728.350; and –731.530, 710, and 800. Utah's proposed definition is consistent with the context in which the terms are used in these rules. Making the three terms synonymous makes their use consistent throughout Utah's rules, reducing uncertainty over their intended meaning.

As proposed, the combined definition of the terms ''water supply,'' ''State-appropriated water'' and ''State-appropriated water supply'' recognizes water rights established before and after Utah became a State. Making the terms synonymous invokes the full protections provided by the State's rules wherever those terms appear for water rights that the Utah Constitution and Code recognize. The State's proposed definition also provides a potentially broader scope of water protection than does the Federal counterpart term ''drinking, domestic or residential water supply.'' Based on this reasoning, we find Utah's proposed definition is no less effective than the counterpart term's definition.

2. Utah Admin. R. 645–105–312, –313, and –314, Blaster Training, Examination, and Certification: Minimum Age

Utah proposes to add a new rule at Utah Admin. R. 645–105–314 that requires candidates for blaster certification to be 21 years of age or older. It also proposes to change Utah Admin. R. 645–105–312 and –105–313 to remove and add the word ''and'' after each clause, respectively, in view of adding the new rule at 645–105–314. Utah proposes these changes to make its rules consistent with Federal law for explosives handling. There is no provision in the 30 CFR regulations or SMCRA that expressly requires candidates for blaster certification to be at least 21 years old.

Explosive materials are within the jurisdiction of the Bureau of Alcohol, Tobacco, and Firearms (ATF) of the U.S. Department of the Treasury (U.S. Treasury). Federal regulations at 27 CFR Chapter I, Part 55, establish requirements for the shipment, transportation, and possession of explosive materials. They also impose requirements on granting licenses to individuals to engage in the business of importing, manufacturing, and dealing in explosive materials. Further, those regulations include requirements imposed on issuing permits to people who intend to acquire explosive materials for use. ATF defines explosive materials as ''explosives, blasting agents, water gels, and detonators.'' Subsections 55.26(c) and (c)(1) state that ''[n]o person shall knowingly distribute explosive materials to any individual who * * * is under twenty-one years of age * * *.'' Further, section 55.49(b) and (b)(1) state that ''[t]he Chief, Firearms and Explosives Licensing Center, shall approve a properly executed application for a license or permit, if * * * the applicant is 21 years of age or older * * *.'' Clearly, the intent of these Federal regulations is to restrict explosives handling, possession, and transport to individuals 21 years of age or older. Utah's proposed rule is consistent with these Federal regulations governing explosive materials.

In addition, Utah's rules for blaster training, examination and certification refer to knowledge of, and compliance with, Federal regulations and laws for explosives. At Utah Admin. R. 645–105–220, the State's rules note that ''[t]raining includes, but is not limited to, the technical aspects of blasting operations, and Utah and Federal laws governing the storage, transportation, and use of explosives.'' The Federal counterpart for this rule is found at 30 CFR 850.13(a)(1) and is worded similarly. Utah Admin. R. 645–105–240 goes on to say that ''Training will include course work in, and discuss the practical application of: * * * * 247. Current federal and Utah rules applicable to the use of explosives * * *.'' The Federal counterpart to this rule is 30 CFR 850.13(b)(7) and is worded the same. Utah Admin. R. 645–105–441.300 further provides that a blaster certification may be suspended or revoked for ''[v]iolation of any provision of Utah or federal explosives laws or regulations * * *.'' The Federal counterpart regulation is found at 30 CFR 850.15(b)(iii) and is worded the same.

We find Utah's proposed rule is consistent with the intent of its rules and the counterpart Federal regulations for blaster training, examination, and certification in general. We also find that it is consistent with, and no less effective than, the ATF's regulations requiring persons engaging in the explosives business or using explosives to be at least 21 years of age.

3. Utah Admin. R. 645–301–525.130 and Utah Admin. R. 645–301–525.700, Pre-subsidence Surveys and Public Notice of Proposed Mining: To Whom a Permit Applicant Must Give Copies of Pre-subsidence Surveys

Utah proposes to include water conservancy districts among those to whom it gives pre-subsidence surveys and notices of proposed mining. Specifically, it proposes to revise Utah Admin. R. 645–301–525.130 by adding the phrase ''* * * the water conservancy district, if any, in which the mine is located * * *'' near the end of the last sentence. The resulting change requires permit applicants to give a copy of a pre-subsidence survey and any technical assessment or engineering evaluation to the water conservancy district, if any, where the mine is located in addition to giving copies to the property owner and DOGM. Such surveys describe the condition of certain buildings, dwellings and related structures and the quantity and quality of all State-appropriated water supplies in the permit and adjacent areas that might be adversely affected by subsidence. The proposed revision to Utah Admin. R. 645–301–525.700 adds the phrase '' * * * to the water conservancy district, if any, in which the mine is located and * * *'' to the second sentence. That change requires the underground mine

operator to mail a notification of proposed mining to the water conservancy district, if any, in which the mine is located in addition to all owners and occupants of surface property and structures above the underground workings at least six months prior to mining, or within a different period if approved by DOGM. This notice identifies specific areas where mining will occur, dates when specific areas will be undermined, and the location or locations where the operator's subsidence control plan may be examined.

Utah's existing rules provide for the same distribution of pre-subsidence surveys and public notices of proposed mining that the counterpart Federal regulations do. The Federal counterparts to Utah Admin. R. 645–301–525.130 and 645–301–525.700 are found at 30 CFR 784.20(a)(3) and 817.122, respectively. The existing Federal and State provisions require permit applicants to give pre-subsidence surveys, technical assessments, and engineering evaluations to property owners and to the regulatory authority and DOGM, respectively. DOGM is the regulatory authority in Utah. Both also require operators to mail public notices of proposed mining to all owners and occupants of surface property and structures above the underground workings. As currently written and approved, Utah's existing rules meet the minimum standard set by the Federal regulations.

Adding the new phrases to Utah's rules extends the distribution of its pre-subsidence surveys and public notices of proposed mining to more parties than required by the Federal regulations. The Federal regulations do not include water conservancy districts among the recipients of pre-subsidence surveys or public notices of proposed mining. That does not preclude Utah from including them in its rules, however. By including water conservancy districts among the recipients of pre-subsidence surveys and public notices of proposed mining, Utah recognizes the interest such districts have in the possible effects underground mining-related subsidence can have on State-appropriated water supplies and when those effects might begin to occur. Moreover, section 505(b) of SMCRA provides that ''Any provision of any State law or regulation in effect upon the date of enactment of this Act, or which may become effective thereafter, which provides for more stringent land use and environmental controls and regulations of surface mining and reclamation operation than do the provisions of this Act or any regulations issued pursuant thereto shall not be construed to be inconsistent with this Act.'' We find Utah's rules are no less effective than the counterpart Federal regulations as proposed with the added phrases.

4. Utah Admin. R. 645–301–728.350, Probable Hydrologic Consequences Determinations for Underground Coal Mining and Reclamation Activities

Utah proposes to make three changes to Utah Admin. R. 645–301–728.350. The existing rule requires the probable hydrologic consequences (PHC) determination to include findings on whether underground coal mining and reclamation activities conducted after October 24, 1992, ''* * * may result in contamination, diminution or interruption of State-appropriated water in existence at the time the application is submitted and used for legitimate purposes within the permit or adjacent areas.'' Utah proposes to replace the word ''water'' with ''Water'' (changing the small case ''w'' to upper case ''W''). It also proposes to delete the final phrase that reads '' * * * and used for legitimate purposes within the permit or adjacent areas * * *'' and replace it with the phrase '' * * * within the proposed permit or adjacent areas * * *'' after the word ''existence.'' As proposed, the rule would require PHC determinations to include findings on whether underground coal mining and reclamation activities conducted after October 24, 1992, may contaminate, diminish, or interrupt ''* * * State-appropriated Water in existence within the proposed permit or adjacent areas at the time the application is submitted.''

The counterpart Federal regulation is found at 30 CFR 784.14(e)(3)(iv). It requires the PHC determination to include findings on whether the underground mining activities conducted after October 24, 1992, may contaminate, diminish or interrupt ''* * * a well or spring in existence at the time the permit application is submitted and used for domestic, drinking, or residential purposes within the permit or adjacent areas.''

Utah's proposed rule differs from the counterpart Federal regulation in its use of the term ''State-appropriated Water'' where the Federal regulation refers to ''a well or spring * * * used for domestic, drinking, or residential purposes * * *.'' As noted in our previous finding, Utah's proposed combined definition of ''Water Supply,'' ''State-appropriated Water,'' and ''State-appropriated Water Supply,'' makes those terms synonymous to mean ''* * * state appropriated water rights which are recognized by the Utah Constitution or Utah Code.'' In that finding, we concluded that Utah's proposed definition is no less effective than the definition of the Federal counterpart term ''drinking, domestic or residential water supply'' at 30 CFR 701.5. The Federal term ''drinking, domestic or residential water supply'' is defined in part to mean '' * * * water received from *a well or spring* and any appurtenant delivery system that provides water for direct human consumption or household use'' (emphasis added). As such, Utah's use of the term ''State-appropriated Water'' in its proposed rule is analogous to the counterpart Federal regulation's reference to ''a well or spring * * * used for domestic, drinking, or residential uses * * *.''

There are other differences between the wording of Utah's proposed rule and the counterpart Federal regulation. Utah's proposed rule requires the PHC determination to find if underground mining will adversely affect State-appropriated Water existing in the permit or adjacent areas when the application is submitted, but it does not expressly mention use of the water or where it is used. By comparison, the counterpart Federal regulation specifies that the PHC determination find if underground mining will adversely affect a well or spring existing at the time a permit application is submitted and used for domestic, drinking or residential purposes in the permit or adjacent areas. As stated before, in Utah's proposed combined definition, ''State-appropriated Water'' means State-appropriated water rights that are recognized by the Utah Constitution or Utah Code. We interpret section 717(a) of SMCRA as requiring deference to State water law on questions of water allocation and use (60 FR 16722, 16733; March 31, 1995). Title 73 of the Utah Code is entitled ''Water and Irrigation.'' Under the prior appropriation system of Utah water law, a water user who first puts water to use has the water right, and a water right is perfected when water is put to use (sections 73–3–1 and 73–3–17, respectively). As the State quoted in its January 29, 1997, letter (Administrative Record No. UT–1094) the Utah Supreme Court's discussion of *J.J.N.P. Co.* v. *State of Utah ex rel. Division of Water Resources,* 655 P.2d 1133 (Utah 1982) cited the provision of section 73–1–3 of the Utah Code (entitled ''Beneficial use basis of right to use'') in explaining that:

> * * * individuals have no ownership interest as such in natural waters, only the right to put the water to certain uses. 'Beneficial use shall be the basis, the measure and the limit of all rights to the use of water in this state,' § 73–1–3, and the right to

beneficial use may be acquired only by compliance with the legal procedures for appropriation of a given right.

Though Utah's proposed rule does not expressly mention water use, the term ''State-appropriated Water'' in its rule, by definition, invokes State-appropriated water rights recognized by the Utah Constitution or the Utah Code. Utah water rights, in turn, are based on putting water to beneficial use. In the context of water use in a predominantly semi-arid State such as Utah, we interpret the descriptive term ''beneficial use'' as stated by the Utah Supreme Court to include using water for domestic, drinking, and residential purposes. Therefore, we believe it is reasonable and consistent with Utah water law to interpret Utah's proposed rule as implying water use by referring to ''State-appropriated Water.''

Similar reasoning applies to the question of where the water use must occur to be considered in the PHC determination's finding of potential adverse effects under Utah's proposed rule. Proposed Utah Admin. R. 645–301–728.350 addresses State-appropriated Water in existence within the proposed permit or adjacent areas at the time the application is submitted. As explained above, water use is a basis for a water right, and the definition of ''State-appropriated Water'' means State-appropriated water rights that are recognized by the Utah Constitution or Utah Code. Therefore, we believe it is reasonable and consistent with Utah water law to interpret Utah's proposed rule as applying to beneficial use of State-appropriated Water in the proposed permit or adjacent areas. Removing the reference to use for ''legitimate purposes'' does not reduce the rule's effectiveness. By recognizing water use for beneficial purposes as the basis of a water right, Utah water law confers legitimacy on such use. Moreover, the counterpart Federal regulation does not refer to ''use for legitimate purposes'' in its description of water use for domestic, drinking, or residential purposes, either.

The State explained that removing the word ''water'' with a small case ''w'' and replacing it with ''Water'' in the term ''State-appropriated Water'' does not alter the meaning of that term (Administrative Record No. UT–1169). Utah explained that ''State-appropriated Water'' at Utah Admin. R. 645–301–728.350 has no meaning other than the one proposed in this amendment for the combined definition of ''Water Supply,'' ''State-appropriated Water,'' and ''State-appropriated Water Supply'' at Utah Admin. R. 645–100–200. We found Utah's definition to be no less effective than the definition of the counterpart Federal term ''drinking, domestic and residential water supply'' in finding III.B.1 of this final rule.

Based on the reasoning presented above, we find proposed Utah Admin. R. 645–301–728.350 is consistent with titles 40 and 73 of the Utah Code and is no less effective than the counterpart Federal regulation at 30 CFR 784.14(e)(3)(iv).

5. Utah Admin. R. 645–301–860.110, –860.111, and –860.112, Surety Bonds

The State proposed to revise and add requirements at Utah Admin. R. 645–301–860.110 through –860.112 that surety companies must meet in order to issue bonds for coal mines in Utah and that operators must comply with to ensure that they hold bonds issued by companies that meet the requirements of –860.110. Specifically, the State proposed to revise Utah Admin. R. 645–301–860.110 to require surety companies that issue bonds in Utah to have an A.M. Best rating of A− or better or an A.M. Best Financial Performance Rating (FPR) of 8 or better, and to be continuously listed in the current issue of the U.S. Treasury's *Circular 570*. *Circular 570* lists surety companies holding Certificates of Authority from the U.S. Treasury. Utah also proposed to add Utah Admin. R. 645–301–860.111, which gives operators 120 days to obtain a surety bond with companies that meet the standards of proposed –860.110 (if they do not have such a bond already) or face enforcement action. Under proposed Utah Admin. R. 645–301–860.112, if DOGM notifies an operator that a surety company guaranteeing its performance does not meet the standard of –860.110, the operator has 120 days to correct the problem or face enforcement action.

The Federal counterpart regulation at 30 CFR 800.20(a) only requires that ''[a] surety bond shall be executed by the operator and a corporate surety licensed to do business in the State where the operation is located.''

Utah intends to establish a more secure bonding program with these proposed additional rule requirements. In order to avoid inadequate bond coverage due to surety company insolvencies, Utah proposed to allow only surety companies deemed to be financially strong by A.M. Best and listed in *Circular 570* to issue bonds to guarantee coal mine reclamation performance in Utah.

A.M. Best is recognized as the leading provider of independent ratings of an insurance/surety company's financial strength and ability to meet its obligations. A.M. Best assigns a rating after it conducts an extensive quantitative and qualitative evaluation of a surety company's financial strength, operating performance, and market profile. While having an A− [excellent] rating or a Financial Performance Rating of 8 or better from A.M. Best is no guarantee that an insolvency will not occur, accepting surety bonds only from surety companies that meet the financial criteria to *earn* these ratings indicates that insolvency is far less likely.

A.M. Best's highest ratings are A++ and A+, which indicate a superior financial condition. A Best's rating of A− indicates that a company's overall financial condition is excellent. As A.M. Best stated, earning a Financial Performance Rating (FPR) of 8 or better from A.M. Best means a ''* * * company has, on balance, very strong financial strength, operating performance and market profile when compared to the standards established by the A.M. Best Company. These companies, in [its] opinion, have a strong ability to meet their ongoing obligations to policy holders.''

Requiring a surety company to be listed in the U.S. Treasury's *Circular 570* provides additional assurance that a surety company is able to meet its obligations according to the financial requirements at 31 CFR part 223. Utah's proposal to require that surety companies be listed in *Circular 570* applies to all of Utah's coal mining surety bonds, notwithstanding Federal lands and Federal co-obligees.

The U.S. Treasury establishes a per-bond underwriting limitation based on its in-depth financial analysis of a surety company that applies for authorization to write Federal bonds. Surety companies that are granted a Certificate of Authority are listed in *Circular 570*. Each year, surety companies have to re-apply to be listed. The U.S. Treasury requires listed companies to submit quarterly reports that list all bonds issued on which the United States is an obligee or co-obligee. If at any time the U.S. Treasury determines that a surety company no longer meets the financial criteria to be listed in *Circular 570*, the U.S Treasury terminates the surety company's Certificate of Authority. Often, A.M. Best's downgrades of surety companies correspond to the U.S. Treasury's terminations of surety companies. Utah's proposal provides the State with the ability to be pro-active in its efforts to maintain a more secure bonding program.

Utah's proposal to give operators 120 days to comply with the requirement to have bonds with companies that meet the new standards should provide

adequate time for operators to seek surety bonds or other allowable forms of bond with surety companies that meet the proposed standards.

For the reasons described above, we find proposed Utah Admin. R. 645–301–860.110, –860.111, and –860.112 are no less stringent than SMCRA and no less effective than the Federal regulations.

IV. Summary and Disposition of Comments

Public Comments

We asked for public comments on the amendment in letters dated April 2, 2002, and in the May 17, 2002, **Federal Register** (Administrative Record Nos. UT–1163 and UT–1170, respectively). We received comments from one State agency and two Federal agencies. We did not receive any public comments on the proposed amendment.

Federal Agency Comments

Under 30 CFR 732.17(h)(11)(i) and section 503(b) of SMCRA, we requested comments on the amendment from various Federal agencies with an actual or potential interest in the Utah program (Administrative Record No. UT–1163).

On April 9, 2002, the Ogden regional office of the U.S. Department of Agriculture, Forest Service, called us to say the Forest Service had no comments on the amendment (Administrative Record No. UT–1164).

In a letter dated April 18, 2002, the U.S. Department of the Interior, Fish and Wildlife Service responded to our request by stating that it had no comments on the amendment (Administrative Record No. UT–1168).

Environmental Protection Agency (EPA) Concurrence and Comments

Under 30 CFR 732.17(h)(11)(i) and (ii), we are required to get concurrence from EPA for those provisions of the program amendment that relate to air or water quality standards issued under the authority of the Clean Water Act (33 U.S.C. 1251 *et seq.*) or the Clean Air Act (42 U.S.C. 7401 *et seq.*).

None of the revisions that Utah proposed to make in this amendment pertain to air or water quality standards. Therefore, we did not ask EPA to concur on the amendment. However, we requested EPA's comments on the amendment under 30 CFR 732.17(h)(11)(i) (Administrative Record No. UT–1163). EPA did not respond to our request.

State Historic Preservation Officer (SHPO) and the Advisory Council on Historic Preservation (ACHP)

Under 30 CFR 732.17(h)(4), we are required to request comments from the SHPO and ACHP on amendments that may have an effect on historic properties. In letters dated April 2, 2002, we requested comments on Utah's amendment from the SHPO and ACHP (Administrative Record No. UT–1163).

The Utah SHPO responded to our request for comment in a letter dated April 12, 2002 (Administrative Record No. UT–1165). The SHPO found that the proposed amendment has no potential to affect cultural resources.

We did not receive any comments on the amendment from the ACHP.

V. OSM's Decision

We approve Utah's amendment based on the findings presented above.

To implement this decision, we are amending the Federal regulations at 30 CFR Part 944, which codify decisions concerning the Utah program. We find that good cause exists under 5 U.S.C. 553(d)(3) to make this final rule effective immediately. Section 503(a) of SMCRA requires the State's program to demonstrate that the State has the capability of carrying out the provisions of the Act and meeting its purposes. Making this regulation effective immediately will expedite that process. SMCRA requires consistency of State and Federal standards.

VI. Procedural Determinations

Executive Order 12630—Takings

This rule does not have takings implications. This determination is based on the analysis performed for the counterpart Federal regulation.

Executive Order 12866—Regulatory Planning and Review

This rule is exempted from review by the Office of Management and Budget (OMB) under Executive Order 12866 (Regulatory Planning and Review).

Executive Order 12988—Civil Justice Reform

The Department of the Interior conducted the reviews required by section 3 of Executive Order 12988 and determined that this rule meets the applicable standards of subsections (a) and (b) of that section. However, these standards are not applicable to the actual language of State regulatory programs and program amendments because each program is drafted and promulgated by a specific State, not by OSM. Under sections 503 and 505 of SMCRA (30 U.S.C. 1253 and 1255) and the Federal regulations at 30 CFR 730.11, 732.15, and 732.17(h)(10), decisions on proposed State regulatory programs and program amendments submitted by the States must be based solely on a determination of whether the submittal is consistent with SMCRA and its implementing Federal regulations and whether the other requirements of 30 CFR Parts 730, 731, and 732 have been met.

Executive Order 13132—Federalism

This rule does not have federalism implications. SMCRA delineates the roles of the Federal and State governments with regard to the regulation of surface coal mining and reclamation operations. One of the purposes of SMCRA is to ''establish a nationwide program to protect society and the environment from the adverse effects of surface coal mining operations.'' Section 503(a)(1) of SMCRA requires that State laws regulating surface coal mining and reclamation operations be ''in accordance with'' the requirements of SMCRA, and section 503(a)(7) requires that State programs contain rules and regulations ''consistent with'' regulations issued by the Secretary pursuant to SMCRA.

Executive Order 13211—Regulations That Significantly Affect The Supply, Distribution, or Use of Energy

On May 18, 2001, the President issued Executive Order 13211, which requires agencies to prepare a Statement of Energy Effects for a rule that is (1) considered significant under Executive Order 12866, and (2) likely to have a significant adverse effect on the supply, distribution, or use of energy. Because this rule is exempt from review under Executive Order 12866 and is not expected to have a significant adverse effect on the supply, distribution, or use of energy, a Statement of Energy Effects is not required.

National Environmental Policy Act

This rule does not require an environmental impact statement because section 702(d) of SMCRA (30 U.S.C. 1292(d)) provides that agency decisions on proposed State regulatory program provisions do not constitute major Federal actions within the meaning of section 102(2)(C) of the National Environmental Policy Act (42 U.S.C. 4332(2)(C)).

Paperwork Reduction Act

This rule does not contain information collection requirements that require approval by OMB under the Paperwork Reduction Act (44 U.S.C. 3507 *et seq.*).

Regulatory Flexibility Act

The Department of the Interior certifies that this rule will not have a significant economic impact on a

substantial number of small entities under the Regulatory Flexibility Act (5 U.S.C. 601 *et seq.*). The State submittal, which is the subject of this rule, is based on counterpart Federal regulations for which an economic analysis was prepared and certification made that such regulations would not have a significant economic effect on a substantial number of small entities. In making the determination as to whether this rule would have a significant economic impact, the Department relied upon the data and assumptions for the counterpart Federal regulations.

Small Business Regulatory Enforcement Fairness Act

This rule is not a major rule under 5 U.S.C. 804(2), the Small Business Regulatory Enforcement Fairness Act. This rule: a. Does not have an annual effect on the economy of $100 million; b. will not cause a major increase in costs or prices for consumers, individual industries, Federal, State, or local government agencies, or geographic regions; and c. does not have significant adverse effects on competition, employment, investment, productivity, innovation, or the ability of U.S. based enterprises to compete with foreign-based enterprises.

This determination is based upon the fact that the State submittal that is the subject of this rule is based upon counterpart Federal regulations for which an analysis was prepared and a determination made that the Federal regulation was not considered a major rule.

Unfunded Mandates

This rule will not impose an unfunded mandate on State, local, or tribal governments or the private sector of $100 million or more in any given year. This determination is based upon the fact that the State submittal, which is the subject of this rule, is based upon counterpart Federal regulations for which an analysis was prepared and a determination made that the Federal regulation did not impose an unfunded mandate.

List of Subjects in 30 CFR Part 944

Intergovernmental relations, Surface mining, Underground mining.

Dated: September 5, 2002.

Brent T. Wahlquist,

Regional Director, Western Regional Coordinating Center.

For the reasons set out in the preamble, 30 CFR 944 is amended as set forth below:

PART 944—UTAH

1. The authority citation for part 944 continues to read as follows:

Authority: 30 U.S.C. 1201 *et seq.*

2. Section 944.15 is amended in the table by adding a new entry in chronological order by November 6, 2002 to read as follows:

§ 944.15 Approval of Utah regulatory program amendments.

* * * * *

Original amendment submission date	Date of final publication	Citation/description
*	*	*
March 28, 2002	November 6, 2002	Definition of ''Water Supply,'' ''State-appropriated Water,'' and ''State-appropriated Water Supply'' at Utah Admin. R. 645–100–200; Utah Admin. R. 645–105–310 through –314; R. 645–301–525.130 and –525.700; Utah Admin. R. 645–301–728.350; R. 645–301–860.110 through –860.112; R. 645–400–162; and R. 645–400–319, –322, and –381.

[FR Doc. 02–28197 Filed 11–5–02; 8:45 am]

BILLING CODE 4310–05–P

DEPARTMENT OF THE INTERIOR

Office of Surface Mining Reclamation and Enforcement

30 CFR Part 950

[WY–029–FOR]

Wyoming Regulatory Program

AGENCY: Office of Surface Mining Reclamation and Enforcement, Interior.

ACTION: Final rule; approval of amendment.

SUMMARY: We, the Office of Surface Mining Reclamation and Enforcement (OSM), are approving a proposed amendment to the Wyoming regulatory program (the ''Wyoming program'') under the Surface Mining Control and Reclamation Act of 1977 (SMCRA or the Act). Wyoming proposed revisions to its Coal Rules about groundwater and surface water hydrology, coal mine waste impoundments, alluvial valley floors and threatened and endangered plant species. The State intended to revise its program to be consistent with the corresponding Federal regulations, provide additional safeguards and clarify ambiguities.

EFFECTIVE DATE: November 6, 2002.

FOR FURTHER INFORMATION CONTACT: Guy Padgett, Telephone: 307/261–6550, Internet address: *GPadgett@osmre.gov.*

SUPPLEMENTARY INFORMATION:

I. Background on the Wyoming Program
II. Submission of the Proposed Amendment
III. OSM's Findings
IV. Summary and Disposition of Comments
V. OSM's Decision
VI. Procedural Determinations

I. Background on the Wyoming Program

Section 503(a) of the Act permits a State to assume primacy for the regulation of surface coal mining and reclamation operations on non-Federal and non-Indian lands within its borders by demonstrating that its State program includes, among other things, ''a State law which provides for the regulation of surface coal mining and reclamation operations in accordance with the requirements of the Act'; and rules and regulations consistent with regulations issued by the Secretary pursuant to the Act.'' See 30 U.S.C. 1253(a)(1) and (7). On the basis of these criteria, the Secretary of the Interior conditionally approved the Wyoming program on November 26, 1980. You can find background information on the Wyoming program, including the Secretary's findings, the disposition of comments, and conditions of approval in the November 26, 1980, **Federal Register** (45 FR 78637). You can also find later actions concerning Wyoming's program and program amendments at 30 CFR 950.11, 950.12, 950.16 and 950.20).

II. Submission of the Proposed Amendment

By letter dated July 20, 2001, Wyoming sent us an amendment to its program (administrative record no. WY–

34–01) under SMCRA (30 U.S.C. 1201 *et seq.*). Wyoming sent the amendment in response to a December 23, 1985, letter (administrative record no. WY–34–07) that we sent to Wyoming in accordance with 30 CFR 732.17(c), in response to the required program amendments at 30 CFR 950.16(d), (e), (h), (i), (ii)(2), (jj); State Program Amendment disapprovals at 30 CFR 950.12(a)(3) and (4); and to include the changes made at its own initiative. The provisions of its Coal Rules that Wyoming proposed to revise were: (1) Chapter 2, Section 2(a)(vi)(L)(III), water quantity descriptions; (2) Chapter 2, Section 2(a)(vi)(L)(IV), water quality sampling; (3) Chapter 2, Section 2(a)(vi)(L)(iv), surface water information—acidity; (4) Chapter 2, Section 2(a)(vi)(M)(III), sampling and analysis methodology; (5) Chapter 2, Section 2(a)(vi)(M)(III)(4), ground water information; (6) Chapter 2, Section 2(a)(vi)(O), probable hydrologic consequences determination; (7) Chapter 2, Section 2(b)(xi)(D)(I)(1), surface water monitoring plan; (8) Chapter 2, Section 2(b)(xi)(D)(I)(2), surface water monitoring plan contents; (9) Chapter 2, Section 2(b)(xi)(D)(I)(3), impacts of data upon hydrologic balance; (10) Chapter 2, Section 2(b)(xi)(D)(II)(1 and 2), groundwater monitoring plan and contents; (11) Chapter 2, Section 2(b)(xii), probable hydrologic consequences; (12) Chapter 3, Section 2(c)(viii)(D through G), alluvial valley floors; (13) Chapter 4, Section 2(c)(xii)(D)(IV), coal mine waste impoundments; (14) Chapter 4, Section 2(i), surface water and ground water quality and quantity monitoring; (15) Chapter 4, Section 2(i)(i), removes redundant groundwater language; (16) Chapter 4, Section 2(w), to prevent material damage to hydrologic balance outside the permit area; (17) Appendix A, Appendix IV, to change the list of plant species of special concern; (18) Codified Disapproval at 30 CFR 950.12(a)(4), elevations and locations of stations to monitor water quality, quantity, fish and wildlife and air quality; (19) Required Amendment at 30 CFR 950.16(ii)(2), fish and wildlife habitat and shrub density; and (20) Required Amendment at 30 CFR 950.16(jj), shrub standard for grazing land.

We announced receipt of the proposed amendment in the October 11, 2001, **Federal Register** (66 FR 51891). In the same document, we opened the public comment period and provided an opportunity for a public hearing or meeting on the amendments adequacy (administrative record no. WY–34–10). We did not hold a public hearing or meeting because no one requested one. The public comment period ended on November 13, 2001. We received comments from one Federal agency.

III. OSM's Findings

Following are the findings we made concerning the amendment under SMCRA and the Federal regulations at 30 CFR 732.15 and 732.17. We are approving the amendment.

A. Revisions to Wyoming's Rules That Contain Language That Is the Same or Similar to the Corresponding Sections of the Federal Regulations

1. Chapter 2, Section 2(a)(vi)(L)(IV), 30 CFR 780.21(b)(2), Surface Water Information—acidity.
2. Chapter 2, Section 2(a)(vi)(O), Probable Hydrologic Consequences (PHC) Determination.
3. Chapter 2, Section 2(b)(xi)(D)(I)(3), Use of Data to Determine Impacts of the Operation Upon Hydrologic Balance.
4. Chapter 3, Section 2(c)(viii)(D through G), Alluvial Valley Floors.
5. Chapter 4, Section 2(c)(xii)(D)(IV), Coal Mine Waste Impoundment.
6. Chapter 4, Section 2(w), Prevention of Material Damage to the Hydrologic Balance Outside of the Permit Area.

Because these proposed rules contain language that is the same as or similar to the corresponding Federal regulations, we find that they are no less effective than the corresponding Federal regulations.

B. Revisions to Wyoming's Rules That Are Not the Same as the Corresponding Provisions of the Federal Regulations

1. Chapter 2, Section 2(a)(vi)(L)(III), Water Quantity Descriptions

Wyoming's Coal Rules do not currently require the monitoring of ''seasonal flow rates'' within a surface water system to be included in a mine permit application. We pointed this out to Wyoming in a 30 CFR part 732 letter dated December 23, 1985, and cited the Federal rules at 30 CFR 780.21(b)(2).

Wyoming is now proposing to add, ''Water quantity descriptions shall include, at a minimum, baseline information on seasonal flow rates * * *.'' With the addition of seasonal flow rates, this Wyoming regulation is as effective as its Federal counterpart.

2. Chapter 2, Section 2(a)(vi)(L)(IV), Water Quality Sampling

According to a December 23, 1985, 30 CFR part 732 letter that we sent to Wyoming, Chapter 2, Section 2(a)(VI)(L)(IV) of Wyoming's Coal Rules were less effective than the Federal counterpart rules at 30 CFR 780(21)(a). Wyoming is therefore now proposing new language to correct this problem. Specifically, whereas previously Wyoming's Coal Rules did not specify that all water quality sampling required water quality data sufficient to identify seasonal variation, the revised rule proposed by Wyoming in this amendment states that, ''All surface water-quality sampling and analyses performed to meet the requirements of this Section shall be conducted according to the methodology in the 20th edition of 'Standards Methods for the Examination of Water and Wastewater,' or the methodology in 40 CFR Part 136—'Guidelines Establishing Test Procedures for the Analysis of Pollutants,' as amended on January 16, 2001. Contact the Wyoming Land Quality Division for information on how to obtain a copy of either reference materials.'' The new proposed rule goes on to specify what data is to be included. 40 CFR part 136 gives the procedures for water-quality analyses and, since this is referenced in the revised State rules, the State rule is as effective as the Federal regulation.

3. Chapter 2, Section 2(a)(vi)(M)(III), 30 CFR 780.21(a), Sampling and Analysis Methodology

The Federal regulations at 30 CFR 780.21(a) establish that water quality analyses must be performed according to the ''Standard Methods for Examination of Water and Wastewater,'' or the methodology in 40 CFR parts 136 and 434.

Wyoming's proposal requires the analyses to be performed according to the ''Standard Methods for Examination of Water and Wastewater'' or 40 CFR part 136. Like 40 CFR part 136, part 434 pertains to the NPDES program. Wyoming states that the Land Quality Division is not responsible for the National Pollutant Discharge Elimination System (NPDES) program in Wyoming; the NPDES program is enforced by Wyoming's Water Quality Division (WQD). OSM understands that WQD will enforce NPDES water quality standards required under SMCRA, either using ''Standard Methods * * *'' or the methodology 40 CFR Parts 136 and 434.

On this basis Wyoming's provision at Chapter 2, Section 2(a)(vi)(M)(iii) is no less effective than 30 CFR 780.21(a).

4. Chapter 2, Section 2(a)(vi)(M)(III)(4), Ground water information

This revision will require that pH be included as one of the groundwater quality parameters to be measured and incorporated into the permit application because it is required in the Federal regulations at 30 CFR 780.21(b)(1).

Wyoming is doing this pursuant to codified program amendment 30 CFR 950.16(h) that was published in the November 24, 1986, **Federal Register** (51 FR 42209, 42211). The State's proposed rule is no less effective than the Federal counterpart regulation.

5. Chapter 2, Section 2(b)(xi)(D)(I)(1), Surface Water Monitoring Plan

The State's proposal is very similar to its Federal counterpart (30 CFR 780.21(j)(1)) with the exception that it does not specifically mention that the monitored parameters should relate to the effluent limitations at 40 CFR part 434. This omission is irrelevant, however, since the proposed regulation allows the State to determine what parameters are necessary to protect the hydrologic balance, and it can include parameters monitored in the NPDES program if it's deemed necessary.

Therefore, the proposed revised rule is no less effective than its Federal counterpart.

6. Chapter 2, Section 2(b)(xi)(D)(I)(2), Surface-water Plan Contents (30 CFR 780.21(j)(3))

This amendment clarifies the minimum parameters that shall be sampled during monitoring and transfers language currently found in Chapter 4, Section 2(i). In addition, it prescribes quarterly monitoring (unless an alternate frequency is approved by the Administrator of Wyoming's Land Quality Division) but allows operators to keep the results on-site and report them in the annual report. The effectiveness of the alternate frequency is discussed under findings no. B.7 and B.8 below.

7. Chapter 2, Section 2(b)(xi)(D)(II)(1. and 2.), Groundwater Monitoring Plan and Plan Contents (30 CFR 780.21(i)(1)); and

8. Chapter 4, Section 2(i), Surface Water and Groundwater Quality and Quantity Monitoring (30 CFR 780.21(i))

Wyoming's proposal for surface water and ground water monitoring provide that monitoring shall be conducted quarterly unless an alternative frequency appropriate to the monitoring site is approved by the Administrator. The Federal counterpart for both surface and groundwater monitoring requires monitoring every three months.

The Federal regulations also require the monitoring data to be submitted to the regulatory authority every three months. However, we approved Wyoming's Land Quality Division's (LQD) approach to allowing operators to keep the results on-site and report them in the annual report. This approval was contained in the July 25, 1990, **Federal Register** notice (55 FR 30221, 30225).

In its amendment submission, Wyoming states:

Contrary to the Federal rule, these proposed rules contain language that allows for the Administrator of Wyoming's Land Quality Division (LQD) to approve alternative monitoring frequencies which vary from the three-month requirement prescribed by the U.S. Office of Surface Mining (OSM). The LQD is proposing alternative frequencies in recognition of the seasonal field conditions which occur in Wyoming that can make it difficult, if not impossible, to reasonably access a particular monitoring well location. In addition, the Federal and LQD rules do not make a distinction between wells monitoring undisturbed aquifers and those monitoring spoil recovery areas. Twenty-plus years of water quality and water level measurements collected on Wyoming mines has shown that in general, no useful additional information is obtained by monitoring an undisturbed aquifer quarterly. In selected cases, periodic monitoring (i.e., semi-annual or annual) is sufficient to detect natural or manmade changes to the undisturbed aquifer.

On the other hand, quarterly monitoring of a spoil well, in order to determine rates of recovery and direction flow, may be reasonable given the amount of change that can occur to this recovery area in three months time. On selected areas, there may be instances where it is necessary to require monitoring on a more frequent basis depending on the location and anticipated water changes. Such instances could include monitoring of alluvial wells or wells located in an area of surface water/groundwater interface. The LQD would like the rules to reflect this level of flexibility and afford the operator the opportunity to approach the LQD with the necessary information to apply for approval of alternate groundwater monitoring frequencies.

In our review of the amendment, we asked Wyoming (administrative record no. WY–34–13) for additional explanation of the provisions allowing the Administrator to approve an alternative frequency for surface water and groundwater monitoring. In a letter dated January 17, 2002 (administrative record no. WY–34–14), Wyoming stated:

Groundwater Monitoring

It was not LQD's intention that a less frequent monitoring schedule be accepted by the Administrator unless the operator could justify that the revised schedule would be appropriate. To date, no reduced groundwater monitoring schedules have been approved until at least several years of quarterly data have been collected to ensure the initial estimates of groundwater flow rates and directions and water quality variations over time were ''on track'' and that a change would not be missed under a reduced monitoring schedule. Changes to a monitoring schedule and the associated justification provided by the operator have been processed as permit changes, *e.g.*, Minor Revisions, to ensure that the justifications are part of the official permit record.

In the proposed LQD rule, the LQD was implicitly combining 30 CFR 780.21(i)(1) [quarterly monitoring to establish baseline and an operational track record] and 30 CFR 816.41(c)(3) [flexibility to adjust the monitoring schedule] based on mine operations to date. For example, in most alluvial aquifers, a reduced monitoring schedule has not been justified because of frequent water level changes in response to precipitation events. Similarly, as noted in the ''Statement of Principal Reasons,'' it is unlikely that a reduced monitoring frequency would be allowed in a backfill (spoils) well because of on-going recharge. In contrast, in a confined aquifer at depths more than 100 feet below ground surface, a reduced schedule has been appropriate, particularly when no apparent seasonal or other temporal changes have been apparent for many years.

Even when LQD has allowed for a reduction in a mine's ground water monitoring schedule, water level measurements are generally required more frequently than water quality monitoring. In general, a water quality change is the result of a change in groundwater flow direction or rate or a change in recharge/discharge conditions. All of these changes generally impact water levels more rapidly than water quality; therefore, as ''insurance,'' the water level monitoring schedule is reduced. As a further precaution, the monitoring frequency for the entire monitoring network is not reduced uniformly. Again, the frequency needs to be appropriate for the monitored site; wells farther from mining impacts might be monitored less frequently than those closer to projected impacts. The LQD Administrator has required a return to a more frequent monitoring schedule as mining approached a particular area. Such a variation in monitoring frequency is found in *Ground Water Study No. 8, Section 3.3, in Ground Water Information Manual: Coal Mine Permit Applications* (April 1987). This Section contains the following quote:

The frequency measurements in other wells ranged from monthly to annually depending upon location and anticipated water level changes.

Surface Water Monitoring

As indicated on page 13 of the July 20, 2001, Formal Program Amendment letter, an alternate surface water monitoring schedule could be approved in recognition of the climatic conditions that can occur in Wyoming. Many coal operators use an automated sampling system to monitor surface water quantity. As one might expect, there are normally times of the year when the water is frozen, the operator is still required to obtain a sample of the water for the quarterly quality assessment by breaking through the ice layer if possible. It is also of interest to note that most operators who utilize an automated system for quantity sampling take readings from those samplers on a continuous basis when water is flowing.

Permit revisions

Pages 13 and 17 of the Formal Program Amendment letter dated July 20, 2001,

contain the following phrase which was meant to indicate that an applicant would be required to change their permit by formal revision; ''and afford the operator the opportunity to approach the LQD with the necessary information to apply for approval of alternate surface water (ground water) monitoring frequencies.'' This need to ''apply'' was meant to equate to the revision process. The ability to modify a surface water or groundwater monitoring schedule can only be accomplished if this proposed change has been reviewed by LQD staff and is formally incorporated into the permit.

Conclusion

The LQD believes rules at Chapter 2, Section 2(b)(xi)(D)(I)(2) and (II)(2) provide the same protection of the groundwater and surface water resources as the Federal counterpart rules and therefore are not less effective. The fact than any change to monitoring frequency is done through formal permit revision should alleviate concerns regarding the way in which such things are approved. Additionally, the LQD hydrology staff review all such requests and only agree to a modified monitoring frequency when such modification does not jeopardize their ability to ascertain whether: mining is causing material damage to surface or groundwater systems outside the permit area; water quality and quantity are suitable to support the approved postmining land use; and the water rights of other users are being protected or replaced.

We agree that Wyoming's rules at Chapter 2, Section 2(b)(xi)(D)(I)(2) and (II)(2) provide the same protection for groundwater and surface water resources as the Federal rules at 780.21(i) and (j) and are therefore no less effective.

9. Chapter 2, Section 2(b)(xii), Probable Hydrologic Consequences

In order to make its rule on Probable Hydrologic Consequences determinations no less effective than the Federal rules, Wyoming proposes the addition of the following language to its rule: ''The PHC determination shall be based on baseline hydrologic, geologic and other information collected for the permit application and may include data statistically representative of the site.'' In a 30 CFR part 732 letter dated December 23, 1985, OSM required the State to do this and supplied the exact language to be used (which the State used). The State defines the term ''general area'' that it uses in this rule in Chapter 1, Section 2(an).

Based on the above, we find the revised State rule to be no less effective than the Federal rules.

10. Chapter 4, Section 2(i)(i), Removes Redundant Groundwater Language

The addition of language to Chapter 2, Section 2(b)(xi)(D)(II)(1 and 2) [''The plan shall provide for the monitoring of parameters that relate to the suitability of the groundwater for current and approved postmining land uses''] made that language at Chapter 4, Section 2(i)(i) redundant and therefore unnecessary. It is therefore proposed to be eliminated and will not make the State rule less effective than the Federal rule.

11. Appendix A, Appendix IV, to change the State's List of Plant Species of Special Concern

Although not required by Federal regulations, Wyoming lists its endangered and threatened species as well as its candidates for threatened and endangered species in an appendix to its regulations. The status of Wyoming's current list has changed requiring that it be updated in order to be accurate. Specifically, only one plant species had been listed as ''threatened'' or ''endangered.'' Three other candidates were potential candidates for listing. Now, however, there is one threatened, one endangered and two potential candidates. In addition, Wyoming will add ''species of special concern'' to its list. This updated list is approved.

12. Chapter 2, Section 2(a)(vi)(J)(VIII), Application Content Requirements for Surface Coal Mining Operations (Disapproval Codified at 30 CFR 950.12(a)(4)))

We had codified at 30 CFR 950.12(a)(4) our disapproval of Wyoming's May 1, 1986, regulations at Chapter II, Section 3(a)(vi)(M) regarding the deletion of the locational data requirements for monitoring stations. In an informal submittal dated January 29, 1991, Wyoming asserted that the locational data requirements were present in its current rules at Chapter II, Section 3(a)(vi)(C)(VIII), now renumbered Chapter 2, Section 2(a)(vi)(J)(VIII). In a comment letter dated December 23, 1991, We agreed with Wyoming's explanation that the use of this regulation was the correct counter-part regulation to describe the locational data requirements of baseline data gathering stations, and is no less effective that the Federal regulations. Therefore, Wyoming's regulations at Chapter 2, Section 2(a)(vi)(J)(VIII) are in accordance with the Federal regulations and resolves the disapproval codified at 30 CFR 950.12(a)(4).

13. Required Amendment at 30 CFR 950.16(ii)(2), Fish and Wildlife Habitat and Shrub Density

Chapter 2, section 2(b)(iv)(C) of Wyoming's rules requires a plan to assure revegetation of all affected land in accordance with chapter iv, section 2(d). ''The plan shall include the method and schedule of revegetation, including but not limited to species of plants, seeding rates, seeding techniques, mulching requirements or other erosion control techniques, and seeding times to be used in a given area for reclamation purposes. The standards and specifications adopted by the State Conservation Commission for mine reclamation shall be considered by the applicant during the preparation of the reclamation plan whenever practicable. The Wyoming Game and Fish Department (WGFD) shall be consulted and its approval shall be required for minimum stocking and planting arrangements of trees and shrubs, including species composition and vegetative ground cover for crucial and critical habitat. The WGFD shall be consulted for minimum stocking and planting arrangements of trees and shrubs, including species composition and vegetative ground cover for important habitat. The Wyoming Department Of Agriculture shall be consulted regarding croplands and erosion control techniques.

Chapter 4, section 2(d)(x)(e)(iii) of Wyoming's coal rules requires for areas containing designated critical or crucial habitat, the WGFD shall be consulted about, and its approval shall be required for, minimum stocking and planting arrangements of shrubs, including species composition. For areas determined to be important habitat, the WGFD shall be consulted for recommended minimum stocking and planting arrangements of shrubs, including species composition, that may exceed the programmatic standard discussed above.

Federal regulations at 30 CFR 950.16(ii)(2) require Wyoming to revise the rules at chapter 2, section 2(b)(iv)(C), and Chapter 4, section 2(d)(x)(E)(III), to require consultation with and approval by the WGFD of tree and shrub standards for all lands to be reclaimed for ''fish and wildlife habitat'' land use.

In the August 6, 1996, preamble (61 FR 40738), in discussing the required program amendment at 30 CFR 950.16(ii)(2), we indicated that the rules at Chapter 2, section 2(b)(iv)(C) and Chapter 4, section 2(d)(x)(E)(III) do not require consultation and approval on all surface mined lands to be reclaimed for a ''fish and wildlife habitat'' land use. The rules require consultation and concurrence on critical habitat and crucial habitat, but they do not require consultation and concurrence on lands to be reclaimed for the fish and wildlife habitat land use. The Federal regulations at 30 CFR 816.116(b)(3)(i)

require, for areas to be developed for the fish and wildlife habitat land use, consultation and concurrence by the State agency responsible for the administration of the wildlife program on minimum stocking and planting arrangements for tree and shrub stocking. To the extent that the State rules at Chapter 2, section 2(b)(iv)(C), and chapter IV, section 2(d)(x)(E)(III), do not require consultation with and approval by the WGFD on minimum stocking and planting arrangements for tree and shrub stocking on lands to be reclaimed for the fish and wildlife habitat land use, we determined that they were less effective than the Federal regulations at 30 CFR 816.116(b)(3)(i). We approved the rules at chapter II, section 2(b)(iv)(C) and chapter IV, section 2(d)(x)(E)(III) but required Wyoming to revise them to require consultation with and approval by the WGFD of the tree and shrub standards for all lands to be reclaimed for the fish and wildlife habitat land use.

In response to the required amendment, Wyoming responded that this topic was discussed in the April 9, 1996. letter to us. In this letter, Wyoming explained that the Wyoming (Chapter 1, Section 2(bc)(viii) and Federal (30 CFR 701.5) definitions for fish and wildlife habitat are as follows:

> Fish and wildlife habitat means land dedicated wholly or partially to the production, protection or management of species of fish or wildlife.

In the entire state of Wyoming, there is very little habitat which is dedicated wholly or partially to the production, protection or management of species of fish or wildlife. Even habitat considered crucial or critical will in most cases be subject to livestock grazing and a host of recreational uses. Consequently, if limited to this definition, there would be little fish or wildlife habitat in Wyoming because of the multiple use so prevalent here. This fact was recognized by the participants in the shrub standard negotiations hosted by the WGFD. Consequently, Wyoming did not pursue the rule change requested by the required program amendment because it is not applicable to the way that fish and wildlife habitat is designated within the context of reclamation.

As a matter of compromise, all participants in the shrub standard negotiations agreed (including WGFD) that the WGFD would maintain very specific consultation and concurrence on critical and crucial habitats. Whereas, on habitats classified by the WGFD as important, the WGFD would limit their role to that of consultation only. In addition, the Wyoming rules at Chapter 4, section 2(d)(x)(E)(II) require that approved shrub species and seeding techniques be applied to all remaining grazing lands. This requirement has been part of Wyoming's rules since 1986, when the goal of one shrub per square meter on 10 percent of the affected area superseded the equal shrub density requirement. This requirement for additional seeding of shrubs was added in recognition of the need for shrubs to be applied to all surfaces reclaimed for dual use by wildlife and livestock.

WGFD reviews all reclamation plans proposed by coal operators prior to the approval of such plans. Consequently, the WGFD is consulted on such reclamation plans and is provided the opportunity to comment on proposed plans and request changes as needed. Further, the Wyoming rules also contain an entire section within Chapter 4, outlining the required fish and wildlife performance standards.

Operators must provide detailed information on how they will minimize disturbance and adverse impacts on fish, wildlife and related environmental values and achieve enhancement of such resources where practicable. The LQD relies on the expertise of the WGFD to review an operator's proposal and ask for changes needed to ensure that the above environmental values and enhancements are met.

In addition, the 1980 version of Wyoming's rules (Chapter 4, section 3(d)(6)(A)) required that when wildlife habitat is part of the postmining land use, shrubs and trees shall be returned to a density at least equal to that existing on the area before mining. This language was specifically aimed at the land use and not the designation of the habitat because of the restrictive wording in the definition of fish and wildlife habitat. The current rule at Chapter 4, section 2(d)(x)(E) also acknowledges the use of Wyoming's rangelands by wildlife with the following language: ''The postmining density, composition and distribution of shrubs shall be based upon site specific evaluation of premining vegetation and wildlife use.''

The State's response concludes that in recognition of the strong role the WGFD already plays in the review of coal mining permits and how reclamation is carried out, the very limiting definition for fish and wildlife habitat and the fact that the WGFD was part of the shrub density negotiations in 1994 and they concurred with all final decisions, the LQD does not feel it is necessary to specifically address the WGFD's role with respect to fish and wildlife habitat. All participants in the shrub density discussions, as well as the Wyoming Legislature, have indicated that the role of the WGFD in the oversight of Wyoming's coal mine reclamation has been appropriately delineated through the implementing statutes, rules and regulations.

Based on Wyoming's response, we have reevaluated the required program amendment. The currently approved shrub density standards are applicable to all grazing lands (the predominant postmining land use in Wyoming) where shrubs existed prior to mining. As stated in the State's definition of grazing land, this land use includes use by wildlife. The approved Wyoming shrub density standards are programmatic standards that were developed in consultation with and concurrence from the WGFD. WGFD consultation and concurrence is required for minimum planting and stocking arrangements of shrubs, including species composition, for areas containing critical and crucial wildlife habitat. It is our experience that in the West the vast majority of the reclaimed land is subject to multiple use by both livestock and wildlife. In such cases, the lands could be subject to the revegetation success standards of cover, production and shrub density. Under the Wyoming program, these multiple use lands would be defined as having a grazingland land use. These lands would be subject to the programmatic shrub density standards that were developed in consultation with, and with approval of, the WGFD also using the cover and production standards. The effect is the same.

In addition, the Wyoming LQD has a Memorandum of Understanding (MOU) with WGFD (administrative record no. WY–34–11). The MOU clearly defines the roles and responsibilities of both the agencies and provides procedures for timely disposition of issues regarding the effects of mining and reclamation activities on fish, wildlife, and their habitats in Wyoming. This provides further assurance that WGFD actively participates in the protection of fish and wildlife habitat in Wyoming.

Based on the information provided by Wyoming and the record on development of the existing programmatic shrub density, we have determined that Wyoming's program is consistent with and no less effective than the Federal regulations at 30 CFR 816.116(b)(3)(i) and remove the required program amendment at 30 CFR 950(ii)(2).

14. Required Amendment at 30 CFR 950.16(jj), Shrub Standard for Grazing Land

In 1995 Wyoming revised its regulations at Chapter 1, section 2(bc)(xi) to define ''treated grazing land'' as grazing land which has been altered to reduce or eliminate shrubs provided such treatment was applied at least five years prior to submission of the state program permit application. However, grazing land altered more than five years prior to submission of the state program permit application on which full shrubs have reestablished to a density of at least one per nine square meters does not qualify as treated grazing land.

In the August 6, 1996, preamble (61 FR 40740), in discussing the approval of the ''treated grazing land'' definition with a required program amendment at 30 CFR 950.16(jj), we indicated that we were requiring Wyoming to clarify the revegetation standard for grazingland that is affected after the date of our approval and that was treated less than 5 years prior to the submission of the permit application.

As set forth in the proposed definition for ''treated grazing land'' at Chapter 1, section 2(bc)(xi), grazing land that is disturbed after the date of our approval of these rules and that was treated less than 5 years prior to the submission of the permit application is not ''treated grazing land.'' As set forth in the definition for ''eligible land'' at Chapter 1, section 2(ac), this grazing land is eligible land that is subject to the shrub standard set forth at chapter 4, Section 2(d)(x)(E), which at subsection (I) states that ''[e]xcept where a lesser density is justified from premining conditions in accordance with Appendix A, at least 20 percent of the eligible land shall be restored to shrub patches supporting an average of one shrub per square meter.''

The preamble indicates that given Wyoming's rationale that it wanted to take away any incentive for an operator to reduce premining shrub densities so that fewer shrubs would have to be established on reclaimed grazinglands, it is not likely that Wyoming intended that the postmining shrub reestablishment standard could be a lesser density than was based on the premining, treated condition. Even so, the language of the rules could be interpreted to allow this. Alternatively, it's possible that Wyoming intended that any operator treating grazing land less than 5 years prior to the submission of the permit application would then automatically have to reclaim to the maximum standard of at least one shrub per square meter on 20 percent of the eligible land.

There is no direct counterpart definition for ''treated grazing land'' in the Federal regulations. However, 30 CFR 816.116(b)(1) requires that standards for success shall be applied in accordance with the approved postmining land use and, at a minimum, for areas developed for use as grazingland, the ground cover and production of living plants on the revegetated area shall be at least equal to that of a reference area or ''such other success standards approved by the regulatory authority.''

The preamble (61 FR 40740) concluded that because Wyoming's rules are unclear as to the shrub reestablishment standard for grazingland that is affected after the date of our approval and that was treated less than 5 years prior to the submission of the permit application, we found that Wyoming's proposed definition for ''treated grazing land'' at chapter 1, section 2(bc)(xi), as applied in conjunction with the proposed definition for ''eligible land'' at Chapter 1, section 2(ac), the proposed rule at Chapter 4, section 2(d)(x)(E)(I), and appendix A to the rules at section VIII.E, did not clearly satisfy for this class of grazing land the Federal regulation at 30 CFR 816.116(b)(1)—that requires the regulatory authority to set standards of revegetation success for areas developed for grazing land. Therefore, we required Wyoming to revise the definition for ''treated grazing land'' at chapter 1, section 2(bc)(xi), to otherwise revise its rules, or to provide us with a policy statement, clarifying the shrub standard for grazingland that is affected after the date of our approval and that was treated less than 5 years prior to the submission of the permit application.

In response to the required amendment Wyoming does not propose to change any rules to address this question. Instead, the following policy has been adopted by the LQD. This policy was presented at a public workshop sponsored by the LQD held on September 30 and October 1, 1996. The purpose of this workshop was to explain the shrub density standard to coal operators, consultants and LQD staff members.

If native acreage is disturbed in any way which removes shrubs between the August 6, 1996, OSM approval date and less than five years before the acreage is submitted as part of a coal permit application or coal permit amendment application, the shrub density existing on adjacent, undisturbed and representative lands will be used as the premine shrub density for this same acreage. This policy will be applied regardless of whether the disturbance was intentionally or accidentally applied (*e.g.*, controlled burn, herbicide spraying or lightening strike). If this representative, undisturbed area was not sampled for shrub density and composition by the applicant as part of the application process, this same applicant will be required to sample the representative, undisturbed area.

In the regulations at 30 CFR 950.16(jj), we clearly allow the use of a policy statement to address the required amendment. For areas disturbed in any way that removes shrubs between the August 6, 1996, OSM approval date and less than five years before the acreage is submitted as part of a coal permit application or coal permit amendment application, the Wyoming policy statement clearly sets a shrub density standard based on the shrub density of adjacent, undisturbed representative lands. This adequately addresses our concern and resolves the outstanding required amendment. As proposed, the policy statement makes the definition of ''treated grazing land'' no less effective than the Federal regulations.

IV. Summary and Disposition of Comments

Public Comments

We asked for public comments on the amendment on July 26, 2001 (administrative record no. WY–34–6), but received none.

Federal Agency Comments

Under 30 CFR 732.17(h)(11)(i) and section 503(b) of SMCRA, we requested comments on the amendment from various Federal agencies with an actual or potential interest in the Wyoming program (administrative record no. WY–34–6).

We subsequently received a September 18, 2001, letter from Marvin W. Nichols, Jr., Administrator for Coal Mine Safety, with the Department of Labor's Mine Safety and Health Administration (MSHA) (administrative record no. WY–34–9).

MSHA stated that only changes to Chapter 4 of the Wyoming Rules have any impact on the activities of MSHA, that they don't conflict with MSHA's requirements, and that some of Wyoming Rules have restrictions greater than MSHA's.

Wyoming having greater restrictions than MSHA, however, presents no problem.

Environmental Protection Agency (EPA) Concurrence and Comments

Under 30 CFR 732.17(h)(11)(i) and (ii), we are required to get a written concurrence from EPA for those provisions of the program amendment

that relate to air or water quality standards issued under the authority of the Clean Water Act (33 U.S.C. 1251 *et seq.*) or the Clean Air Act (42 U.S.C. 7401 *et seq.*).

Under 30 CFR 732.17(h)(11)(i), we requested comments on the amendment from EPA (administrative record no. WY–34–5). EPA did not respond to our request.

State Historic Preservation Officer (SHPO) and the Advisory Council on Historic Preservation (ACHP)

Under 30 CFR 732.17(h)(4), we are required to request comments from the SHPO and ACHP on amendments that may have an effect on historic properties. On July 26, 2001, we requested comments on Wyoming's amendment (administrative record no. WY–34–4), but neither responded to our request.

V. OSM's Decision

Based on the above findings, we approve the amendment Wyoming sent to us.

We approve, as discussed in: finding no. 9, Chapter 2, Section 2(a)(vi)(L)(III) concerning water quantity descriptions; finding no. 10, Chapter 2, Section 2(a)(vi)(L)(IV), concerning water quality sampling; finding no. 1, Chapter 2, Section 2(a)(vi)(L)(v), concerning dissolved and suspended solids; finding no. 2, Chapter 2, Section 2(a)(vi)(M)(III), concerning sampling and analysis methodology; finding no. 11, Chapter 2, Section 2(a)(vi)(M)(III)(4), concerning ground water information; finding no. 3, Chapter 2, Section 2(a)(vi)(O), concerning probable hydrologic consequences determination; finding no. 12, Chapter 2, Section 2(b)(xi)(D)(I)(1), concerning surface water monitoring plans; finding no. 13, Chapter 2, Section 2(b)(xi)(D)(I)(2), concerning surface water plan contents; finding no. 4, Chapter 2, Section 2(b)(xi)(D)(I)(3), concerning impacts of data upon hydrologic balance; finding no. 14, Chapter 2, Section 2(b)(xi)(D)(II)(1 and 2), concerning groundwater monitoring plan and contents; finding no. 5, Chapter 2, Section 2(b)(xii), concerning probable hydrologic consequences determination; finding no. 6, Chapter 3, Section 2(c)(viii)(D through G), concerning alluvial valley floors; finding no. 7, Chapter 2, Section 2(b)(xi)(D)(I)(2); finding no. 14, Chapter 2, Section 2(b)(xi)(D)(XII)(1 and 2); finding no. 16, Chapter 4, Section 2(i)(i), concerning the removal of redundant groundwater language; finding no. 8, Chapter 4, Section 2(w), concerning the prevention of material damage to hydrologic balance outside the permit area; finding no. 17, Appendix A, Appendix IV, concerning a change in the list of plant species of special concern; finding no. 18, 30 CFR 950.12(a)(4), concerning why the codified required amendment for elevations and locations of stations to monitor water quality * * * should be removed; finding no. 19, 30 CFR 950.16(ii)(2), concerning why the codified required amendment for fish and wildlife habitat and shrub density should be removed; and finding no. 20, 30 CFR 950.16(jj), concerning why the codified disapproval for the shrub standard for grazing land should be removed.

To implement this decision, we are amending the Federal regulations at 30 CFR part 950, which codify decisions concerning the Wyoming program. We find that good cause exists under 5 U.S.C. 553(d)(3) to make this final rule effective immediately. Section 503(a) of SMCRA requires that the Wyoming program demonstrates that Wyoming has the capability of carrying out the provisions of the Act and meeting its purposes. Making this regulation effective immediately will expedite that process. SMCRA requires consistency of Wyoming and Federal standards.

Effect of OSM's Decision

Section 503 of SMCRA provides that a State may not exercise jurisdiction under SMCRA unless the State program is approved by the Secretary. Similarly, 30 CFR 732.17(a) requires that any change of an approved State program be submitted to OSM for review as a program amendment. The Federal regulations at 30 CFR 732.17(g) prohibit any changes to approved State programs that are not approved by OSM. In the oversight of the Wyoming program, we will recognize only the statutes, regulations, and other materials we have approved, together with any consistent implementing policies, directives, and other materials. We will require Wyoming to enforce only approved provisions.

VI. Procedural Determinations

Executive Order 12630—Takings

This rule does not have takings implications. This determination is based on the analysis performed for the counterpart Federal regulations.

Executive Order 12866—Regulatory Planning and Review

This rule is exempted from review by the Office of Management and Budget under Executive Order 12866.

Executive Order 12988—Civil Justice Reform

The Department of the Interior has conducted the reviews required by section 3 of Executive Order 12988 and has determined that this rule meets the applicable standards of subsections (a) and (b) of that section. However, these standards are not applicable to the actual language of State regulatory programs and program amendments because each program is drafted and promulgated by a specific State, not by OSM. Under sections 503 and 505 of SMCRA (30 U.S.C. 1253 and 1255) and the Federal regulations at 30 CFR 730.11, 732.15, and 732.17(h)(10), decisions on proposed State regulatory programs and program amendments submitted by the States must be based solely on a determination of whether the submittal is consistent with SMCRA and its implementing Federal regulations and whether the other requirements of 30 CFR Parts 730, 731, and 732 have been met.

Executive Order 13132—Federalism

This rule does not have Federalism implications. SMCRA delineates the roles of the Federal and State governments with regard to the regulation of surface coal mining and reclamation operations. One of the purposes of SMCRA is to ''establish a nationwide program to protect society and the environment from the adverse effects of surface coal mining operations.'' Section 503(a)(1) of SMCRA requires that State laws regulating surface coal mining and reclamation operations be ''in accordance with'' the requirements of SMCRA, and section 503(a)(7) requires that State programs contain rules and regulations ''consistent with'' regulations issued by the Secretary pursuant to SMCRA.

Executive Order 13211—Regulations That Significantly Affect the Supply, Distribution, or Use of Energy

On May 18, 2001, the President issued Executive Order 13211 which requires agencies to prepare a Statement of Energy Effects for a rule that is (1) considered significant under Executive Order 12866, and (2) likely to have a significant adverse effect on the supply, distribution, or use of energy. Because this rule is exempt from review under Executive Order 12866 and is not expected to have a significant adverse effect on the supply, distribution, or use of energy, a Statement of Energy Effects is not required.

National Environmental Policy Act

This rule does not require an environmental impact statement because section 702(d) of SMCRA (30 U.S.C. 1292(d)) provides that agency decisions on proposed State regulatory program provisions do not constitute major Federal actions within the meaning of section 102(2)(C) of the National Environmental Policy Act (42 U.S.C. 4332(2)(C)).

Paperwork Reduction Act

This rule does not contain information collection requirements that require approval by OMB under the Paperwork Reduction Act (44 U.S.C. 3507 *et seq.*).

Regulatory Flexibility Act

The Department of the Interior certifies that this rule will not have a significant economic impact on a substantial number of small entities under the Regulatory Flexibility Act (5 U.S.C. 601 *et seq.*). The State submittal, which is the subject of this rule, is based upon counterpart Federal regulations for which an economic analysis was prepared and certification made that such regulations would not have a significant economic effect upon a substantial number of small entities. In making the determination as to whether this rule would have a significant economic impact, the Department relied upon the data and assumptions for the counterpart Federal regulations.

Small Business Regulatory Enforcement Fairness Act

This rule is not a major rule under 5 U.S.C. 804(2), the Small Business Regulatory Enforcement Fairness Act. This rule: (a) Does not have an annual effect on the economy of $100 million; (b) Will not cause a major increase in costs or prices for consumers, individual industries, Federal, State, or local government agencies, or geographic regions; and (c) Does not have significant adverse effects on competition, employment, investment, productivity, innovation, or the ability of U.S.-based enterprises to compete with foreign-based enterprises. This determination is based upon the fact that the State submittal which is the subject of this rule is based upon counterpart Federal regulations for which an analysis was prepared and a determination made that the Federal regulation was not considered a major rule.

Unfunded Mandates

This rule will not impose an unfunded mandate on State, local, or tribal governments or the private sector of $100 million or more in any given year. This determination is based upon the fact that the State submittal, which is the subject of this rule, is based upon counterpart Federal regulations for which an analysis was prepared and a determination made that the Federal regulation did not impose an unfunded mandate.

List of Subjects in 30 CFR Part 950

Intergovernmental relations, Surface mining, Underground mining.

Dated: September 13, 2002.

Brent Wahlquist,

Regional Director, Western Regional Coordinating Center.

For the reasons set out in the preamble, 30 CFR 950 is amended as set forth below:

PART 950—WYOMING

1. The authority citation for part 950 continues to read as follows:

Authority: 30 U.S.C. 1201 *et seq.*

2. Section 950.15 is amended in the table by adding a new entry in chronological order by November 6, 2002 to read as follows:

§ 950.15 Approval of Wyoming regulatory program amendments.

* * * * *

Original amendment submission date	Date of final publication	Citation/description
*	*	*
July 20, 2001	November 6, 2002	Ch. 2, Sec. 2(a)(vi)(L)(III); Ch. 2, Sec. 2(a)(vi)(L)(iv); Ch. 2, Sec. 2(a)(vi)(M)(III); Ch. 2, Sec. 2(a)(vi)(M)(III)(4); Ch. 2, Sec. 2(a)(vi)(O); Ch. 2, Sec. 2(b)(xi)(D)(I)(1); Ch. 2, Sec. 2(b)(xi)(D)(I)(2); Ch. 2, Sec. 2(b)(xi)(D)(I)(3); Ch. 2, Sec. 2(b)(xi)(D)(II)(1 and 2); Ch. 2, Sec. 2(b)(xii); Ch. 3, Sec. 2(c)(viii)(D)–(G); Ch. 4, Sec. 2(c)(xii)(D)(iv); Ch. 4, Sec. 2(i)(i); Ch. 4, Sec. 2(w); Appendix A, Appendix IV; 30 CFR 950.12(a)(4); 30 CFR 950.16(ii)(2); 30 CFR 950.16(jj).

§ 950.16 [Amended]

3. Section 950.16 is amended by removing and reserving paragraphs (ii) and (jj).

[FR Doc. 02–28201 Filed 11–5–02; 8:45 am]

BILLING CODE 4310–05–P

DEPARTMENT OF THE TREASURY

31 CFR Part 103

RIN 1506–AA28

Financial Crimes Enforcement Network; Anti-Money Laundering Programs for Financial Institutions

AGENCY: Financial Crimes Enforcement Network (FinCEN), Treasury.

ACTION: Amendment of interim final rule.

SUMMARY: FinCEN is extending the provision in its regulations that temporarily defers, for certain financial institutions, the application of the anti-money laundering program requirements in section 352 of the Uniting and Strengthening America by Providing Appropriate Tools Required to Intercept and Obstruct Terrorism (USA PATRIOT) Act of 2001.

DATES: This interim final rule is effective November 6, 2002.

FOR FURTHER INFORMATION CONTACT: Office of the Chief Counsel (FinCEN), (703) 905–3590; Office of the Assistant General Counsel for Enforcement (Treasury), (202) 622–1927; or the Office of the Assistant General Counsel for Banking & Finance (Treasury), (202) 622–0480 (not toll-free numbers).

SUPPLEMENTARY INFORMATION:

I. Background

A. USA PATRIOT Act Section 352

On October 26, 2001, the President signed into law the USA PATRIOT Act (Pub. L. 107–56) (the Act). Title III of the Act makes a number of amendments to the anti-money laundering provisions of the Bank Secrecy Act (BSA), which is codified in subchapter II of chapter 53 of title 31, United States Code. These amendments are intended to make it easier to prevent, detect, and prosecute international money laundering and the financing of terrorism. Section 352(a) of

the Act, which became effective on April 24, 2002, amended section 5318(h) of the BSA. As amended, section 5318(h)(1) requires every financial institution to establish an anti-money laundering program that includes, at a minimum: (i) The development of internal policies, procedures, and controls; (ii) the designation of a compliance officer; (iii) an ongoing employee training program; and (iv) an independent audit function to test programs.

The definition of ''financial institution'' in sections 5312(a)(2) and (c)(1) is extremely broad. It includes institutions that are already subject to federal regulation such as banks, savings associations, credit unions, money services businesses (such as money transmitters and currency exchanges), and registered securities broker-dealers and futures commission merchants. The definition also includes dealers in precious metals, stones, or jewels; pawnbrokers; loan or finance companies; trust companies; private bankers; insurance companies; travel agencies; telegraph companies; sellers of vehicles, including automobiles, airplanes, and boats; persons engaged in real estate closings and settlements; investment bankers; investment companies; and commodity pool operators and commodity trading advisors that are registered or required to register under the Commodity Exchange Act (7 U.S.C. 1 *et seq.*). Section 352 of the Act requires *all* of these businesses to establish anti-money laundering programs.

B. Prior Interim Rules Implementing Section 352

On April 29, 2002, FinCEN issued a series of interim final rules implementing section 352 of the Act. These rules prescribed requirements for anti-money laundering programs for banks, savings associations, credit unions, registered securities broker-dealers, futures commission merchants, and introducing brokers that are regulated by a federal functional regulator or a self-regulatory organization, and casinos [1]; money services businesses [2]; mutual funds [3]; and operators of credit card systems.[4] FinCEN also temporarily deferred, until October 24, 2002, the application of section 352 to all other financial institutions.[5] The temporary deferral applied to dealers in precious metals, stones, or jewels; pawnbrokers; loan or finance companies; private bankers; insurance companies; travel agencies; telegraph companies; sellers of vehicles, including automobiles, airplanes, and boats; persons engaged in real estate closings and settlements; certain investment companies; commodity pool operators; and commodity trading advisors.[6]

The purpose of the temporary deferral was to permit FinCEN and Treasury to continue studying the money laundering risks posed by these institutions in order to develop appropriate anti-money laundering program requirements. The extension of the anti-money laundering program requirement to these financial institutions, most of which have never been subject to federal financial regulation, raises many significant practical and policy issues. An inadequate understanding of the affected industries could result in poorly conceived regulations that impose unreasonable regulatory burdens with little or no corresponding anti-money laundering benefits. FinCEN and Treasury are also aware that many of these financial institutions are sole proprietors or small businesses, and that any regulations affecting them must recognize this fact. As a result of our review of these industries, FinCEN and Treasury have published proposed rules that would apply the anti-money laundering program requirements of section 352 to insurance companies [7] and certain investment companies.[8] FinCEN and Treasury are continuing to study the remainder of the deferred financial institutions and expect to issue proposed rules for all these financial institutions within the next six months. FinCEN and Treasury are today extending the temporary deferral concerning section 352 pending the issuance of final rules for these financial institutions.

II. Analysis of the Current Interim Final Rule

A. Extension of Temporary Deferral of Section 352 Requirements for Certain BSA Financial Institutions

As promulgated on April 29, 2002, 31 CFR 103.170 temporarily deferred, until October 24, 2002, the application of section 352 of the Act to dealers in precious metals, stones, or jewels; pawnbrokers; loan or finance companies; private bankers; insurance companies; travel agencies; telegraph companies; sellers of vehicles, including automobiles, airplanes, and boats; persons engaged in real estate closings and settlements; certain investment companies; commodity pool operators; and commodity trading advisors. This interim rule amends section 103.170 by removing the October 24, 2002, termination of the exemption for these financial institutions. As noted above, FinCEN and Treasury have issued proposed rules for some of these financial institutions, and expect to issue additional proposed rules in the coming months. FinCEN and Treasury believe it would be inappropriate to require these financial institutions to implement anti-money laundering programs during the pendency of the rulemaking process.

B. Clarification of Financial Institutions Subject to the Temporary Deferral

The temporary deferral in section 103.170 was intended to apply to all financial institutions other than those for which anti-money laundering program requirements were previously in effect or specifically prescribed pursuant to the April 29, 2002, interim final rules. Although the prior interim final rules did not prescribe anti-money laundering programs for certain financial institutions that are ''banks'' as defined in 31 CFR 103.11(c) but which lack a federal functional regulator, those financial institutions were not specifically included in the list of financial institutions subject to the temporary deferral. Section 103.170 is being amended to include these financial institutions (trust companies and certain state-chartered credit unions that are not federally insured, and private banks) within the temporary deferral.[9] For the same reason, section 103.170 is also being amended to include any person defined as a ''financial institution'' in 31 CFR 103.11(n)(7).[10]

C. Other Compliance Obligations Unaffected

Treasury and FinCEN emphasize that the temporary deferrals do not in any way relieve any business from their obligations under law or regulation,

[1] 67 FR 21110.

[2] 67 FR 21114.

[3] 67 FR 21117.

[4] 67 FR 21121.

[5] *See* 31 CFR 103.170 (67 FR 21113, April 29, 2002).

[6] The deferral did not extend to investment bankers because all such entities are either depository institutions or securities broker-dealers that were subject to anti-money laundering program requirements in the interim final rules.

[7] 67 FR 60625 (September 26, 2002).

[8] 67 FR 60617 (September 26, 2002).

[9] The financial institutions defined as ''banks'' in 31 CFR 103.11(c) correspond substantially to the types of banks included in the list of ''financial institutions'' in 31 U.S.C. 5312(a)(2)(A)–(F).

[10] 31 CFR 103.11(n)(7) defines generally as a financial institution ''a person subject to supervision by any state or federal bank supervisory authority.''

including the requirements in 31 U.S.C. 5331 and 26 U.S.C. 6050I that they report transactions in cash or currency, or certain monetary instruments, that exceed $10,000. The regulations under these sections are codified at 31 CFR 103.30 and 26 CFR 1.6050I, respectively. Every business must ensure that it has appropriate procedures to report such transactions to FinCEN and the IRS using the single Form 8300 jointly prescribed by those agencies. All financial institutions are further reminded of the importance of reporting suspected terrorist activities or otherwise suspicious transactions to the appropriate law enforcement authorities. In addition, Form 8300 contains a box that may be checked to indicate that a particular transaction appears suspicious.

III. Administrative Procedure Act

The provisions of section 352 of the Act, which requires all financial institutions to establish anti-money laundering programs, became effective April 24, 2002. This interim final rule imposes no requirements on any financial institution, and continues the exemption for certain financial institutions from these requirements. Accordingly, good cause is found to dispense with notice and public procedure as unnecessary pursuant to 5 U.S.C. 553(b)(B), and to make the provisions of the interim rule effective in less than 30 days pursuant to 5 U.S.C. 553(d)(1) and (3).

IV. Regulatory Flexibility Act

Because no notice of proposed rulemaking is required for this interim final rule, the provisions of the Regulatory Flexibility Act (5 U.S.C. 601 *et seq.*) do not apply.

V. Executive Order 12866

This interim final rule is not a ''significant regulatory action'' as defined in Executive Order 12866. Accordingly, a regulatory assessment is not required.

List of Subjects in 31 CFR Part 103

Banks and banking, Brokers, Counter money laundering, Counter-terrorism, Currency, Foreign banking, Reporting and recordkeeping requirements.

Authority and Issuance

For the reasons set forth above, FinCEN is amending 31 CFR Part 103 as follows:

PART 103—FINANCIAL RECORDKEEPING AND REPORTING OF CURRENCY AND FOREIGN TRANSACTIONS

1. The authority citation for part 103 is revised to read as follows:

Authority: 12 U.S.C. 1829b and 1951–1959; 31 U.S.C. 5311–5314 and 5316–5332; title III, secs. 312, 313, 314, 319, 352, Pub. L. 107–56, 115 Stat. 307.

Subpart I—Anti-Money Laundering Programs

2. Section 103.170 is amended by revising the section heading and paragraphs (b) and (c), and adding paragraph (d) to read as follows:

§ 103.170 Exempted anti-money laundering programs for certain financial institutions.

* * * * *

(b) *Temporary exemption for certain financial institutions.* (1) Subject to the provisions of paragraphs (c) and (d) of this section, the following financial institutions (as defined in 31 U.S.C. 5312(a)(2) or (c)(1)) are exempt from the requirement in 31 U.S.C. 5318(h)(1) concerning the establishment of anti-money laundering programs:

(i) Dealer in precious metals, stones, or jewels;
(ii) Pawnbroker;
(iii) Loan or finance company;
(iv) Travel agency;
(v) Telegraph company;
(vi) Seller of vehicles, including automobiles, airplanes, and boats;
(vii) Person involved in real estate closings and settlements;
(viii) Private banker;
(ix) Insurance company;
(x) Commodity pool operator;
(xi) Commodity trading advisor; or
(xii) Investment company.

(2) Subject to the provisions of paragraphs (c) and (d) of this section, a bank (as defined in § 103.11(c)) that is not subject to regulation by a Federal functional regulator (as defined in § 103.120(a)(2)) is exempt from the requirement in 31 U.S.C. 5318(h)(1) concerning the establishment of anti-money laundering programs.

(3) Subject to the provisions of paragraphs (c) and (d) of this section, a person described in § 103.11(n)(7) is exempt from the requirement in 31 U.S.C. 5318(h)(1) concerning the establishment of anti-money laundering programs.

(c) *Limitation on exemption.* The exemptions described in paragraphs (a)(2) and (b) of this section shall not apply to any financial institution that is otherwise required to establish an anti-money laundering program by this subpart I.

(d) *Compliance obligations of deferred financial institutions.* Nothing in this section shall be deemed to relieve an exempt financial institution from its responsibility to comply with any other applicable requirement of law or regulation, including title 31 of the U.S.C. and this part.

Dated: October 28, 2002.

James F. Sloan,

Director, Financial Crimes Enforcement, Network.

[FR Doc. 02–27770 Filed 11–5–02; 8:45 am]

BILLING CODE 4810–02–P

DEPARTMENT OF TRANSPORTATION

Coast Guard

33 CFR Part 117

[CGD01–02–122]

RIN 2115–AE47

Drawbridge Operation Regulations; Shrewsbury River, NJ

AGENCY: Coast Guard, DOT.

ACTION: Temporary final rule.

SUMMARY: The Coast Guard is temporarily changing the drawbridge operation regulations that govern the Monmouth County highway bridge, at mile 4.0, across the Shrewsbury River at Sea Bright, New Jersey. This temporary change to the drawbridge operation regulations allows the bridge to remain closed to navigation with required openings only at 6 a.m., 10 a.m., 2 p.m., and 6 p.m. after a twelve-hour advance notice is given, from November 8, 2002 through February 28, 2003. This action is necessary to facilitate structural repairs at the bridge.

DATES: This rule is effective from November 8, 2002 through February 28, 2003.

ADDRESSES: Documents indicated in this preamble as being available in the docket are part of docket (CGD01–02–122) and are available for inspection or copying at the First Coast Guard District, Bridge Administration Office, 408 Atlantic Avenue, Boston, Massachusetts, 02110–3350, between 7 a.m. and 3 p.m., Monday through Friday, except Federal holidays.

FOR FURTHER INFORMATION CONTACT: Mr. Joseph Arca, Project Officer, First Coast Guard District, (212) 668–7165.

SUPPLEMENTARY INFORMATION:

Regulatory Information

We did not publish a notice of proposed rulemaking (NPRM) for this regulation. Under 5 U.S.C. 553(b)(B), the

Coast Guard finds that good cause exists for not publishing an NPRM and under 5 U.S.C. 553(d)(3), the Coast Guard finds that good cause exists for making this rule effective less than 30 days after publication in the **Federal Register**.

On July 12, 2001, the Coast Guard published an NPRM (66 FR 36527) [CGD01–01–095] entitled Drawbridge Operation Regulations Shrewsbury River, New Jersey. That NPRM requested public comment regarding the proposal to temporarily change the drawbridge operation regulations, from November 1, 2001 through February 28, 2002. Under that proposal the bridge would be required to open only four times each day provided a twelve-hour advance notice was given. No comments or objections were received in response to the NPRM published in 2001.

The repair project and temporary operating schedule for 2001 were cancelled for fiscal year 2001 due to contractual issues. As a result of the failure to resolve the contractual issues the project was rescheduled to start in November 2002, a year later than originally planned.

The bridge owner recently renewed its request to temporarily change the bridge operating regulations from November 8, 2002 through February 28, 2003. The temporary operating schedule in this rule is identical to the schedule previously published in the notice of proposed rulemaking last year, under which the bridge will be available to open for vessel traffic four times each day provided a twelve-hour notice is given.

Opening requests received at the Monmouth County highway bridge during the November to February time period each year have been relatively low. In addition, the Coast Guard coordinated the bridge repair project and related temporary bridge opening schedule with the mariners who operate on the Shrewsbury River. All those we contacted agreed that the proposed bridge opening schedule would meet the needs of waterway users. The effective period of this temporary rule is traditionally the most dormant season for vessel traffic on the Shrewsbury River and, accordingly, the best time to perform the necessary repairs at the bridge.

The Coast Guard believes that an NPRM is unnecessary because of the relatively low number of opening requests received at the bridge November through February and the advance coordination effort made by the Coast Guard to coordinate the temporary bridge opening schedule with the mariners.

Good cause exists for making this regulation effective in less than 30 days after publication in the **Federal Register** because any delay encountered in this regulation's effective date would be unnecessary and contrary to the public interest. Delaying the start of this project would also delay the completion date of this project, disrupting vehicular and marine traffic next spring when traffic is much heavier than during the winter months when this temporary operating schedule will be in effect.

Background and Purpose

The Monmouth County highway bridge, at mile 4.0, across the Shrewsbury River has a vertical clearance of 15 feet at mean high water and 17 feet at mean low water. The existing regulations are listed at 33 CFR 117.755.

The bridge owner, Monmouth County, asked the Coast Guard to temporarily change the drawbridge operation regulations to facilitate structural repairs at the bridge to be performed from November 2001 through February 2002.

The Coast Guard published a notice of proposed rulemaking in July 2001. That rule proposed that the bridge open only at 6 a.m., 10 a.m., 2 p.m., and 6 p.m., after a twelve-hour advance notice was given. It was scheduled to go into effect from November 1, 2001 through February 28, 2002, but the project was cancelled before the rulemaking resulted in a temporary final rule. It was subsequently postponed a year due to contractual problems.

The bridge owner has again asked the Coast Guard to temporarily change the regulations governing the Monmouth County highway bridge to allow the operating schedule proposed last year to go into effect this year from November 8, 2002 through February 28, 2003. The Coast Guard contacted the mariners who operate on the Shrewsbury River regarding this temporary operating schedule and no objections were received.

Discussion of Rule

This temporary change to the drawbridge operation regulations will require the bridge to open only at 6 a.m., 10 a.m., 2 p.m., and 6 p.m. after a twelve-hour advance notice is given. The timed openings and the advance notice requirement are necessary to allow the contractor sufficient time to remove equipment and materials from the bridge in order to provide bridge openings.

The number of requests to open the bridge from November through February in past years have been relatively low.

	1999–2000	2000–2001	2001–2002
November	68	85	137
December	31	38	55
January	14	6	19
February	7	13	8

The Coast Guard believes this temporary final rule is reasonable based upon the relatively low number of bridge opening requests during past years, November through February, and the fact that this work is necessary maintenance required to assure continued uninterrupted operation of the bridge.

Regulatory Evaluation

This rule is not a ''significant regulatory action'' under section 3(f) of Executive Order 12866, Regulatory Planning and Review, and does not require an assessment of potential costs and benefits under section 6(a)(3), of that Order. The Office of Management and Budget has not reviewed it under that Order. It is not ''significant'' under the regulatory policies and procedures of the Department of Transportation (DOT) (44 FR 11040, February 26, 1979).

This conclusion is based on the fact that the bridge will continue to open for marine traffic on a set daily schedule.

Small Entities

Under the Regulatory Flexibility Act (5 U.S.C. 601–612), we considered whether this rule would have a significant economic impact on a substantial number of small entities. The term ''small entities'' comprises small businesses, not-for profit organizations that are independently owned and operated and are not dominant in their fields, and governmental jurisdictions with populations less than 50,000.

The Coast Guard certifies under 5 U.S.C. 605(b), that this rule will not have a significant economic impact on a substantial number of small entities.

This conclusion is based on the fact that the bridge will continue to open for marine traffic on a set schedule.

Collection of Information

This rule calls for no new collection of information under the Paperwork Reduction Act of 1995 (44 U.S.C. 3501–3520).

Federalism

A rule has implications for federalism under Executive Order 13132, Federalism, if it has a substantial direct effect on State or local governments and would either preempt State law or impose a substantial direct cost of compliance on them. We have analyzed this rule under that Order and have determined that it does not have implications for federalism.

Unfunded Mandates Reform Act

The Unfunded Mandates Reform Act of 1995 (2 U.S.C. 1531–1538) requires Federal agencies to assess the effects of their discretionary regulatory actions. In particular, the Act addresses actions that may result in the expenditure by State, local, or tribal government, in the aggregate, or by the private sector of $100,000,000 or more in any one year. Though this rule will not result in such an expenditure, we do discuss the effects of this rule elsewhere in this preamble.

Taking of Private Property

This rule will not effect a taking of private property or otherwise have taking implications under Executive Order 12630, Governmental Actions and Interference with Constitutionally Protected Property Rights.

Civil Justice Reform

This rule meets applicable standards in sections 3(a) and 3(b)(2) of Executive Order 12988, Civil Justice Reform, to minimize litigation, eliminate ambiguity, and reduce burden.

Protection of Children

We have analyzed this rule under Executive Order 13045, Protection of Children from Environmental Health Risks and Safety Risks. This rule is not an economically significant rule and does not concern an environmental risk to health or risk to safety that may disproportionately affect children.

Indian Tribal Governments

This final rule does not have tribal implications under Executive Order 13175, Consultation and Coordination with Indian Tribal Governments, because it does not have substantial direct effect on one or more Indian tribes, on the relationship between the Federal Government and Indian tribes, or on the distribution of power and responsibilities between the Federal Government and Indian tribes.

Energy Effects

We have analyzed this rule under Executive Order 13211, Actions Concerning Regulations That Significantly Affect Energy Supply, Distribution, or Use. We have determined that it is not a ''significant energy action'' under that order because it is not a ''significant regulatory action'' under Executive Order 12866 and is not likely to have a significant adverse effect on the supply, distribution, or use of energy. It has not been designated by the Administrator of the Office of Information and Regulatory Affairs as a significant energy action. Therefore, it does not require a Statement of Energy Effects under Executive Order 13211.

Environment

We have considered the environmental impact of this rule and concluded that under figure 2–1, paragraph (32)(e), of Commandant Instruction M16475.1D, this rule is categorically excluded from further environmental documentation because promulgation of changes to drawbridge regulations have been found to not have a significant effect on the environment. A ''Categorical Exclusion Determination'' is available in the docket for inspection or copying where indicated under **ADDRESSES.**

List of Subjects in 33 CFR Part 117

Bridges.

Regulations

For the reasons set out in the preamble, the Coast Guard amends 33 CFR part 117 as follows:

PART 117—DRAWBRIDGE OPERATION REGULATIONS

1. The authority citation for part 117 continues to read as follows:

Authority: 33 U.S.C. 499; 49 CFR 1.46; 33 CFR 1.05–1(g); section 117.255 also issued under the authority of Pub. L. 102–587, 106 Stat. 5039.

2. From November 8, 2002 through February 28, 2003, § 117.755 is temporarily amended by suspending paragraph (b) and adding a new paragraph (c) to read as follows:

§ 117.755 Shrewsbury River.

* * * * *

(c) The Monmouth County highway bridge, mile 4.0, at Sea Bright, shall open on signal at 6 a.m., 10 a.m., 2 p.m., and 6 p.m. after at least a twelve-hour advance notice is given. Advance notice may be given by calling the number posted at the bridge. The draw need not be opened at any time for a sailboat, unless it is under auxiliary power or is towed by a powered vessel. The owners of the bridge shall keep in good legible condition two clearance gages, with figures not less than eight inches high, designed, installed, and maintained according to the provisions of § 118.160 of this chapter.

Dated: October 28, 2002.

J.L. Grenier,

Captain, USCG, Acting Commander, First Coast Guard District.

[FR Doc. 02–28242 Filed 11–5–02; 8:45 am]

BILLING CODE 4910–15–P

DEPARTMENT OF TRANSPORTATION

Coast Guard

33 CFR Part 117

[CGD08–02–025]

RIN 2115–AE47

Drawbridge Operating Regulation; Illinois Waterway, Joliet, IL

AGENCY: Coast Guard, DOT.

ACTION: Notice of temporary deviation from regulations.

SUMMARY: The Commander, Eighth Coast Guard District has issued a temporary deviation from the regulation governing the operation of the Elgin, Joliet & Eastern Railway Drawbridge, across the Illinois Waterway, mile 290.1 at Joliet, Illinois. This deviation allows the drawbridge to remain closed to navigation for three separate 28-hour increments starting at 6 a.m., November 4, 2002, and ending at 10 a.m., November 15, 2002, Central Standard Time. The deviation is necessary to facilitate maintenance work on the bridge that is essential to the continued safe operation of the drawbridge.

DATES: This temporary deviation is effective from 6 a.m., November 4, 2002, until 10 a.m., November 15, 2002.

ADDRESSES: Materials referred to in this rule are available for inspection or copying at the office of the Eighth Coast Guard District, Bridge Administration Branch, Commander (obr), Eighth Coast Guard District, 1222 Spruce Street, St. Louis, MO 63103–2832, between 8 a.m. and 4 p.m., Monday through Friday, except federal holidays. The Bridge Administration Branch maintains the

public docket for this temporary deviation.

FOR FUTHER INFORMATION CONTACT: Roger K. Wiebusch, Bridge Administrator, Commander (obr), Eighth Coast Guard District, 1222 Spruce Street, St. Louis, MO 63103–2832, (314) 539–3900, extension 2378.

SUPPLEMENTARY INFORMATION: The Elgin, Joliet & Eastern Railway Company requested a temporary deviation on September 23, 2002, for the operation of the drawbridge to allow the bridge owner time for preventative maintenance. The drawbridge operation regulations found at 33 CFR 117.393(d) require that the drawbridge be maintained in the open-to-navigation position and close only for the passage of rail traffic. This deviation allows the bridge to remain closed to navigation for four separate 28-hour intervals from 6 a.m., November 4, 2002, until 10 a.m., November 5, 2002, from 6 a.m., November 7, 2002, until 10 a.m., November 8, 2002, from 6 a.m., November 11, 2002, until 10 a.m., November 12, 2002 and from 6 a.m., November 14, 2002, until 10 a.m., November 15, 2002. Vessels not exceeding the vertical clearance of the drawbridge may pass under the drawbridge during repairs. There are no alternate routes for vessels transiting through mile 290.1 on the Illinois Waterway. The drawbridge will be incapable of opening for emergencies during the 28-hour repair periods.

The Elgin, Joliet & Eastern Railway drawbridge provides a vertical clearance of 24.6 feet above normal pool in the closed to navigation position. Navigation on the waterway consists primarily of commercial tows and recreational watercraft. In order to repair and replace gear reducers, roller bearings, gears and shafts, the bridge must be kept inoperative and in the closed to navigation position. This deviation has been coordinated with waterway users. No objections were received.

In accordance with 33 CFR 117.35(c), this work will be performed with all due speed in order to return the bridge to normal operation as soon as possible. This deviation from the operating regulations is authorized under 33 CFR 117.35.

Dated: October 29, 2002.

Roger K. Wiebusch,

Bridge Administrator.

[FR Doc. 02–28134 Filed 11–5–02; 8:45 am]

BILLING CODE 4910–15–U

POSTAL RATE COMMISSION

39 CFR Part 3001

[Docket No. RM2002–1; Order No. 1349]

Electronic Filing

AGENCY: Postal Rate Commission.

ACTION: Final rule.

SUMMARY: This final rule establishes electronic filing as the standard method for filing most formal documents in Commission proceedings. It resembles the proposal in most respects. However, it severs, for a separate docket, changes in filing requirements for library references and computer analyses. Some other differences between the proposal and the final rule include the establishment of two types of account holders, elimination of a hardcopy filing requirement for certain lengthy documents, and the Commission's assumption of responsibility for facilitating service when a blanket waiver is granted. This rule is expected to contribute to more efficient administration of the Commission's workload.

DATES: Effective date: January 7, 2003.

ADDRESSES: Send correspondence to Steven W. Williams, Secretary of the Commission, 1333 H Street NW., Suite 300, Washington, DC 20268–0001.

FOR FURTHER INFORMATION CONTACT: Stephen L. Sharfman, General Counsel, 202–789–6818.

SUPPLEMENTARY INFORMATION: Issuance of notice and order: October 21, 2003;

Regulatory History

See 66 FR 33034, June 20, 2001 (request for comments and technical conference).

See 67 FR 35766, May 21,2002 (notice of proposed rulemaking).

Introduction

The Commission has concluded that it is feasible and desirable to make electronic filing of documents over the Internet the standard procedure for filing official documents with the Commission.

The Commission began laying the groundwork for the conversion from hardcopy to online filing in its notice and order concerning electronic filing (order no. 1317), issued June 13, 2001. That notice established docket no. T2002–1 as a vehicle for conducting a live test of its proposed online filing procedures. Drawing on its experience with that live test, the Commission issued its notice of proposed rulemaking in this docket on May 8, 2002. See order no. 1341, issued May 8, 2002, (67 FR 35766, Tuesday, May 21, 2002). That notice proposed amending the Commission's rules of practice to require that documents submitted to the Commission in official dockets be submitted online, unless a waiver is obtained. The notice included a User Guide describing proposed Filing Online operating procedures. Following publication of its proposed rules and operating procedures, the Commission conducted a Filing Online workshop on June 12, 2002 to provide those intending to participate in future dockets with instruction and hands-on training in those procedures.

Several times over the next several months, the Commission asked those who had participated in recent Commission proceedings to join it in testing Filing Online functions and system capacity. These tests were generally successful. The success of these training and testing procedures has led the Commission to conclude that the Filing Online system is sufficiently developed to warrant its immediate implementation as the standard system for receiving and disseminating documents in formal dockets.

The Commission has concluded that one part of its proposed rules requires further examination before it is implemented. That is the proposal that material filed as library references or computer analyses be filed in a form that can be read and executed on PC hardware. This proposal will be severed from this docket so that it can undergo an additional round of comment before it is implemented.

The rules implementing the Filing Online system that are adopted in this order will apply to subpart H of the Commission's rules of practice, which govern small post office closings. The Commission, however, contemplates making some refinements to subpart H procedures in the near future in order to take better advantage of the Filing Online system.

Summary

The amended rules of practice set out in attachment 1 to this order are final rules implementing the Filing Online system. They generally require that documents in formal proceedings before the Commission be filed through the Filing Online system. These final rules will take effect on January 7, 2003. They differ from the rules described in the notice of proposed rulemaking issued earlier in this docket (order No. 1341, issued May 8, 2002) in several minor respects.

The proposed rules provided for only one kind of account holder. The final

rules distinguish between two types of account holders. Primary Account Holders are those who represent themselves or clients before the Commission. They take responsibility for ensuring that filings submitted through their accounts are authentic, accurate, and authorized by the participant for whom they have been filed. Agent Account Holders are those to whom Primary Account Holders have delegated their authority to file documents with the Commission.

Current account holders who meet the definition of Primary Account Holders will automatically be designated Primary Account Holders by the Secretary. Current account holders who do not meet the definition of Primary Account Holders must reapply to become Agent Account Holders. Primary Account Holders may delegate their authority to file documents with the Commission to other Primary or Agent Account Holders by designating them on their Filing Online Profile Page.

The proposed rules required that certain kinds of lengthy documents be filed both online and in hardcopy form. Under the final rules, the only documents that will be accepted in hardcopy form are those for which a waiver of the online filing requirement has been obtained, designations of written-cross examination, and formal Postal Service requests to change rates or classifications.

The proposed rules required that word processing files be submitted in text-based portable document format (pdf) format, and that all other files that could be converted to text-based pdf files also be submitted in that form. Non-word-processing files could be submitted in their native format, but this was not required.

The final rules require that word processing files be submitted in text-based pdf format, but do not require other files to be submitted in that format. They strongly encourage, but do not require, that word-processing files be submitted in their native format as well. The final rules require that non-word-processing files that are submitted as attachments to host documents be submitted in their native format. Such files may be submitted in text-based pdf on a voluntary basis.

The final rules require that notice be given to the Secretary if a scanned pdf file is being submitted.

The Secretary has expanded the capability of the Filing Online system. As before, a file can be converted to text-based pdf format on line. Now it is also possible to integrate multiple text-based pdf files into a single text-based pdf file on line. This should make it easier for account holders to produce a host document entirely in text-based pdf format.

The proposed rules required that participants serve documents in hardcopy form on other participants who had obtained a waiver of the online filing requirement. Under the final rules, the Commission has assumed the duty of serving hardcopy documents on participants who cannot receive service on line.

The proposed rules required that participants who had obtained a waiver of the online filing requirements serve their documents on others in hardcopy form. Under the final rules, those participants may submit hardcopy documents to the Secretary. The Secretary will serve them by posting them on the Commission's Web site or, if necessary, mailing them in hardcopy form.

The final rules allow complex cross-examination exhibits to be served two calendar days before the appearance of the witness by filing them on line, or by providing them in hardcopy form to the witness's counsel, at the option of the cross examiner.

Public Comments

Five sets of written comments were received in response to the notice of proposed rulemaking in this docket.[1] Of the five commenters, four supported the proposal to require documents in formal dockets to be filed online, essentially as proposed. Based on their experience with the test phase, they regarded the Filing Online system as technically well designed, reliable, and user friendly. They praised its potential to speed the availability of needed documents, to simplify the management of their documents, and to reduce costs. They noted that to realize this potential, online filing must become the standard procedure for filing documents. Carlson Comments at 1, Major Mailer Association (MMA) Comments at 1–2, Office of the Consumer Advocate (OCA) Comments at 1–2, Postal Service Comments at 1, 3.

Val-Pak Direct Marketing Systems, Inc. (Val-Pak). Val-Pak suggests that the Commission's proposal to convert to an online filing system is premature. It proposes that the Commission expand the categories of documents that would have to be dual filed (filed in hard copy as well as electronic form) to include all interrogatory responses, written testimony, briefs, and ''anything that potentially can be included in the formal record.'' It argues that these documents need to be filed in hard copy form to ensure that the docket record is reliably preserved. It asserts that there are other benefits of requiring material to be filed in hard copy form. It contends that hard copy is easier to read, annotate, organize, and recall. It argues that it is more efficient for the originator of a document to produce a batch of hard copies on a high-speed copy machine than for each recipient of that document to produce its own hard copy. Val-Pak Comments at 2.

Val-Pak also criticizes the Commission's proposal not to require testimony and briefs to be filed in hard copy if they are 20 pages or less in length. It argues that it would be cumbersome for participants to ascertain which briefs fall under this threshold, and therefore should be printed out by the participant. *Id.* at 3.

There is little reason for Val-Pak to fear that the record will not be reliably preserved unless the documents that comprise it are filed with the Commission in hardcopy form. The Commission will print a hard copy of every document filed on line in a formal docket and archive it, at least for the duration of that docket. Val-Pak's concern that hardcopy documents are easier to work with should not interfere with the transition to the filing online. While hardcopy documents might be easier to work with, this is not a reason to require documents to be in hardcopy form when they are initially filed with the Commission. Participants who prefer to work with hardcopy documents may print them at any time after the Commission has posted them on its Web site.

A more legitimate concern is Val-Pak's argument that having different filing requirements for testimony and briefs depending on their length will make it difficult for participants to determine whether they have assembled a complete set of such documents. Val-Pak Comments at 3. The Commission agrees that this is likely to complicate the tracking and archiving of such documents. This is one reason that the Commission has decided to drop this

[1] Douglas F. Carlson Comments in Response to Order No. 1341 (Carlson Comments), were submitted on June 12, 2002. Comments of Major Mailers Association in Support of Proposed Filing Online Requirements (MMA Comments), Office of the Consumer Advocate Comments on Notice of Proposed Rulemaking to Require Filing of Documents in Electronic Form (OCA Comments), Comments of United States Postal Service on Postal Rate Commission Order No. 1341 Notice of Proposed Rulemaking to Require Filing of Documents in Electronic Form (Postal Service Comments), and Val-Pak Direct Marketing Systems, Inc. and Val-Pak Dealers' Association, Inc. Comments in Response to Commission Order No. 1341 (Val-Pak Comments) were submitted on June 21, 2002.

proposal, and to apply the same filing requirements to all testimony and briefs, regardless of length.

Major Mailers Association (MMA). MMA generally supports the Commission's proposed Filing Online rules. It joins Val-Pak in criticizing the Commission's proposal to apply different filing requirements to testimony and briefs according to their length. It explains that in a typical rate proceeding it focuses on a few important issues, and regards remaining issues as ''second tier'' issues. It is only interested in receiving testimony and briefs in hardcopy form if they address issues it considers important. It believes that it is faster and more efficient to review testimony and briefs that address ''second tier'' issues if they are received only in electronic form. It argues that this belief is shared by most participants. Rather than requiring testimony and briefs over 20 pages to be filed in hardcopy form, it urges the Commission to adopt a ''rule of reason'' that would permit a participant to designate which testimony and briefs it would prefer to receive in hardcopy form. MMA Comments at 3–4. MMA's concern that it not be burdened with hard copies of testimony and briefs that it is unlikely to read in that form is resolved by the Commission's decision to drop its proposal to require that lengthy testimony and briefs must be filed in hardcopy form. Under the final rules adopted in this order, lengthy briefs and testimony will not be treated differently than other documents. Participants will be able to print lengthy testimony and briefs if they prefer to read them in hardcopy form.

MMA seeks clarification of one aspect of the Commission's proposed Filing Online procedures. It assumes that when an account holder uploads a file to the Commission's Web site in its native format, such as Microsoft Word, converts it to the required pdf format on the Commission's Web site, and submits it for filing, that the Commission posts both the native format file and the pdf file so that others can download them. When an account holder uses Adobe software to convert a file from native format to pdf on his own computer before submitting the document for filing, MMA asks whether the account holder is obligated to submit the file in native format as well. MMA argues that there should be such an obligation, since the native format file is likely to be more amenable to cutting, pasting, and searching than the pdf file. MMA also asks whether computer analyses, such as spreadsheets created in Microsoft Excel, are required to be filed and posted in their native format, and not just posted as a scanned pdf file. MMA Comments at 4–5. The Postal Service also emphasizes the benefits of filing text documents in their native format. Rather than asking that filing in both pdf and native formats be required, however, it asks that it be encouraged as a courtesy to other participants. Postal Service Comments at 7.

It is advantageous for participants to file word processing files in both pdf and native formats for all of the reasons that MMA and the Postal Service cite. The Commission, however, believes that it is premature to make it mandatory to file word processing files in native format. Filing such files in native format raises minor security concerns. For example, account holders could occasionally have hidden annotations or legislative formatting in their native-format text documents which others could retrieve. If the account holder is not aware that these annotations are present, and regards them as confidential, the account holder might regret having submitted the document in native format. One solution, of course, is to check the document for hidden annotations before submitting it for filing. The Commission is searching for technical tools that might facilitate this process. For now, however, the Commission strongly encourages account holders to submit word processing files in native format, but it will not make it mandatory. If the account holder converts a native format file to a pdf file on the Commissions Web site, the option of deleting the native file before submitting the filing record to the Commission is still available. If a filing record submitted to the Commission contains both the native file and the pdf file, the Commission will post both files on its Web site.

MMA also observes that filing computer analyses in native format should be considered mandatory under rule 31(k)(3)(i). It notes that common spreadsheet software allows the analyst to embed formulae and assumptions in spreadsheets that are lost if they are converted to pdf. It further notes that spreadsheets in pdf format must be converted back to their native format before they can be modified or manipulated. For these reasons, MMA urges the Commission to make it clear that account holders must file a native-format version of their computer analyses. MMA Comments at 5. The Postal Service expresses related concerns. It questions whether the Commission's admonition in its notice of proposed rulemaking that ''[a]ny collateral files that can be produced in text-based pdf must also be submitted in that form'' is well considered. It argues that some Excel files can be converted to a text-based pdf format, but that doing so eliminates most of their embedded utility.

In its notice of proposed rulemaking, the Commission proposed filing rules that did not make filing computer analyses or spreadsheet analyses in their native formats mandatory. The rules as proposed required computer analyses to be filed in text-based pdf form if they were part of a host document. If they were filed as attachments to a host document, the proposal required that they be filed in text-based pdf form where possible. Otherwise they allowed them to be filed in their native format. See order no. 1341, issued May 8, 2002, at 4.

The parties' comments have persuaded the Commission to reconsider how its format requirements should apply to computer and spreadsheet analyses. The Commission agrees that it is highly desirable to have computer and spreadsheet analyses filed in their native format for the reasons that MMA and the Postal Service cite. Filing such analyses in native format is already required in most circumstances to satisfy the Commission's documentation rules [such as rules 31(k)(2) and (3) and rule 54(o)]. This is because in most circumstances detailed assumptions, formulae, and sources for numbers are not fully disclosed in testimony or other text documents.

Computer and spreadsheet analyses are typically filed as attachments to host documents. The Filing Online rules authorized by this order require that computer and spreadsheet analyses filed as attachments to a host document be filed in their native format. Filing them in native format, such as Excel, Lotus, or Quattropro, will preserve the ability to read embedded formulae and the ability to manipulate the files. As the Postal Service points out, Excel and similar files are not very useful in pdf format because their embedded formulae cannot be read, and the numbers cannot be manipulated. Accordingly, the Filing Online rules authorized by this order do not require that computer and spreadsheet analyses filed as attachments to host documents be provided in pdf format. Text-based documents filed as attachments to host documents, however, are required to be submitted in text-based pdf format, whenever possible. This will maximize the amount of filed material that can be included in Filing Online's searchable database.

Another way to maximize the amount of material that will be included in Filing Online's searchable database is

for the Commission to be notified if an account holder has submitted a scanned pdf as an attachment to a host document. If the Commission is notified that an attached pdf was scanned, it can OCR it in an attempt to convert it to a searchable text-based pdf format. The Commission, however, cannot tell whether an attachment with a ''.pdf'' extension is text-based or scanned at the time that it is submitted without opening and testing it. To make sure that scanned pdfs are flagged and OCRed, the Filing Online User Guide will instruct the account holder to note in the ''Comment'' box provided on the ''Create Filing Record'' or the ''Edit Filing Record'' page if the pdf attached to a host document is a scanned pdf.

Rather than provide tables or graphs generated in Excel or similar formats in a separate file attached to a host document, an account holder may choose to integrate them into a host document and to explain and annotate them in the host document thoroughly enough to satisfy the Commission's documentation rules. The filing rules authorized by this order require that host documents and all their components be submitted in text-based pdf format. If such material is thoroughly documented in the host document, account holders will not be required to provide it as native format attachments as well. Supplemental files containing such material in native format are useful, however, for reasons already described, and account holders are encouraged to provide them.

Participants should be aware that the host document in text-based pdf format that they are required to provide under Filing Online must be a single file that reads continuously from beginning to end. If Excel-based tables or figures are inserted into the host document, or intended to be a part of the host document as appendices, they should not be submitted as separate files that other participants would have to download separately and reassemble in order to obtain a coherent host document. In order to make it easier for account holders to include material generated in Excel or similar formats in a host document that is a single text-based pdf file, an ''Assemble PDF'' function has been added to the Filing Online system.

The ''Assemble PDF'' function will allow an Account Holder to upload an Excel, Lotus, or Quattropro file, convert it to pdf format, print it, and then decide if it needs to be manipulated in one of several ways. One way would be to simply add it to the end of an existing text-based pdf file. The ''Assemble PDF'' function, however, also provides an account holder with a way to excerpt designated pages from one or more Excel files, reorder them, and append them to an existing pdf file. If an account holder wants to insert Excel-based material at various points in an existing pdf file, this is most easily done by ''embedding'' the material at the desired points, but it could also be done in a multi-step process using the ''Assemble PDF'' function that the Commission has provided.

Embedding, or the various features of the ''Assemble PDF'' function, will help the account holder produce a host document that consists of a single text-based pdf file in order to satisfy the requirements of the Filing Online system. These techniques will be effective if the analyst who has generated the Excel or similar material has set print areas appropriately, and provided any needed headers and footers, prior to converting the Excel material to pdf format.

Revised format requirements. Because the file format requirements for the Filing Online system that appear in the current User Guide differ in minor ways from those described in the notice of proposed Rulemaking, it will be helpful to summarize them.

- Host Documents and other word processing-based files must be submitted as text-based pdf files. The Commission urges that they be submitted as native files as well, but does not require it.
- Files that are not word-processing based (spreadsheet, computer language, scanned files, etc.) must be submitted as native files if they are attached to a host document. They may be submitted as text-based pdf files as well.
- Scanned pdf files must be designated as such at the time they are submitted.

Douglas F. Carlson. Douglas Carlson joins Val-Pak and MMA in criticizing the Commission's proposal to apply different filing requirements to testimony and briefs according to their length. He argues that few briefs or testimonies would avoid the hardcopy filing requirement since few would be less than the 20-page threshold. He complains that the expense of filing and serving such documents in hardcopy form discourages participation in Commission proceedings. He argues that raising the threshold to 30 pages would mitigate this burden, as well as the burden of downloading and printing large numbers of such documents filed by others on deadline days. The OCA supports this proposal. OCA Comments at 3.

Mr. Carlson assumes that the rationale for the Commission's proposed rule that lengthy briefs and testimonies be filed and served in hardcopy form as well as on line is a need to avoid the crush of downloading and printing numerous large documents on the same day and the need to avoid congestion in the Commission's docket section. As an alternative to raising the 20-page threshold, he proposes that briefs and testimonies filed in advance of the filing deadline be excused from the hardcopy requirement. Carlson Comments at 2. The OCA opposes this alternative. It argues that it would give opponents a procedural advantage if they were to receive advance notice of arguments in testimony or briefs, particularly for reply briefs. OCA Comments at 3.

The Commission has decided to drop its proposed rule that would have required lengthy testimony and briefs to be filed and served in hardcopy form. This will eliminate the source of the objections voiced by Mr. Carlson. The recent expansion of capacity of the Commission's Filing Online system, and the tests of that capacity, indicate that congestion of that system is unlikely, even on days of anticipated peak demand. Accordingly, account holders should be able both to upload documents, and to download and print documents on peak filing days, without unreasonable delay. Account holders will be able to print any briefs or testimony that they prefer to review in hardcopy form without having to first determine whether the documents fall on one side or the other of a page-based threshold.

Postal Service. The Postal Service generally supports the proposal to make online filing the standard filing procedure in formal dockets, although it cautions that some additional testing of the Postal Service's ability to download filed documents in live dockets would be desirable before a major case is filed. It suggests that further refining of the proposed Filing Online rules is needed in the following respects.

The Postal Service assumes that the portions of proposed rules 9, 10, and 11 that allow a waiver of the requirement that documents be filed online apply ''only to a participant who is wholly excluded from Filing Online.'' Postal Service Comments at 4. It says that responses to discovery sometimes require that material other than electronic documents be provided, such as videotapes or Priority Mail envelopes, or documents that were generated by non-standard software. It reasons that paragraph (b)(2)(vii) of the current library reference rule (39 CFR 31(b)(2)(vii)) could still accommodate such material if it were made a library reference and an appropriate notice of

filing the library reference were submitted online. It observes that this would increase the number of library references, but would avoid the need to process motions for waivers of the online-filing requirement. Id.

The Postal Service wrongly assumes that proposed rules 9 through 11 would not authorize waivers for individual filings. The language of those rules is explicit that both the online-filing requirement and waivers of that requirement apply on a document-by-document basis. Proposed rule 9(a) provides that ''*[t]he filing of each written document* * * * shall be made using the Internet (Filing Online) * * * unless a waiver is obtained.'' Proposed rule 10(a) states that the online-filing requirement (as well as the account holder requirement) applies on a document-by-document basis. It provides that ''*(e)ach document* filed with the Commission must be submitted through Filing Online by an account holder unless a waiver is obtained.'' Proposed rule 12(a)(2) states that the online service requirement and the exceptions to that requirement apply on a document-by-document basis. Proposed rule 12(a) provides that ''*[e]ach document* filed in a proceeding via the Internet by an account holder shall be deemed served * * *. Proposed rule 12(a)(2) states that there is an exception to the online service requirement for ''*[a] document* that must be served on a participant that the Commission or presiding officer has determined is unable to receive service through the Commission's Web site.'' (Emphasis in the above quotations has been supplied.) In contrast to the above quoted provisions, proposed rule 12(b) makes an exception to the online service requirement available to participants who are unable to file documents online.

Close reading of proposed rules 9 through 12 (which are made final rules by this order) makes it clear that waivers of the online filing requirement are available on both a document-by-document basis, and on a participant basis. If it is feasible to provide material to be filed in electronic form, participants are obligated under these rules to do so, and to file them online. Even if a participant did not originally obtain a document in electronic form, such as a newspaper clipping, but he can readily scan it to produce a legible pdf, he is obligated to do so, and to attach it to a host document, such as an interrogatory answer. A document is eligible to be treated as a library reference only if it is not feasible to generate a legible document in electronic form that can be attached to a host document and filed online. This is consistent with the Commission's policy to minimize the number of library references.

The Postal Service believes that a problem may be created by the gap that would occur between the time that the Filing Online system generates a receipt for a document that has been submitted for filing, and the time that it is accepted and posted on the Commission's Web site.

In its notice of proposed rulemaking, the Commission indicates that when the Filing Online system receives an electronic document that an account holder has submitted for filing, it will issue an electronic receipt to the account holder indicating the time that is was received. It explains that the Commission's docket section would then review the document for compliance with its rules before accepting it as filed. Acceptance would be indicated by posting the document on the Daily Listing page of the Commission's Web site. See order no. 1341, issued May 8, 2002, at 6–7.

The Postal Service speculates that under the current hardcopy system, when a document is submitted at the docket window the docket staff reviews it for compliance with the Commission's filing rules, and then applies a date stamp indicating that it has been accepted for filing. It contrasts this with the Commission's proposed Filing Online procedures, where the docket section would first issue an electronic receipt for a document, then review it for compliance with filing rules. The Postal Service suggests that the scope of the review that the docket section would perform prior to acceptance of a document submitted online would be broader than under the current hardcopy system (for example, determining whether a document is a single-or a multiple-purpose document) and that the authority for such review needs to be clarified. Postal Service Comments at 4–5.

Contrary to the Postal Service's assumption, under the current hardcopy filing system, the docket section date stamps a document when it is received. It then reviews it for compliance with the Commission's filing rules. The date stamp indicates only the time that the document was received. It does not indicate that the document was accepted for filing.

Proposed Filing Online procedures would parallel the current hardcopy procedure. The Commission would issue an electronic receipt to indicate the time that the document was received, and then review it for compliance with filing rules. The difference would be that under Filing Online, the Commission would affirmatively indicate that a document had been accepted for filing by posting it on its Web site. Under current hardcopy filing procedures, if a date-stamped document is determined to be in compliance with the Commission's filing rules, the Commission takes no further action.

The Postal Service is correct, however, that Filing Online would impose filing requirements beyond those that currently apply to hardcopy documents. While the general filing requirements will continue to be set forth in the Commission's rules of practice, some of the more detailed requirements, such as the role of the host document, and the formats that are acceptable, will be published only on the Commission's Web site in the Filing Online User Guide. Reserving such detailed filing requirements for the Filing Online User Guide is necessary because the technical features of the Filing Online system can be expected to continually evolve, and Filing Online procedures will need to evolve with them. It would not be practical to have to continually amend the Commission's rules of practice through notice and comment rulemaking procedures as the Filing Online system evolves.

The Postal Service points out that under rule 9 as it was proposed in the notice of proposed rulemaking, the Secretary is authorized to reject filings if they do not comply with an applicable ''statute, rule, regulation, or order.'' It suggests that if Filing Online requirements do not take the form of a ''statute, rule, regulation, or order'' the Secretary may not use them as grounds for rejection. Postal Service Comments at 4–5.

To clarify the Secretary's rejection authority, final rule 9(d) includes non-compliance with ''filing instructions published by the Secretary'' among the grounds for which the Secretary may reject a filing. For purposes of rule 9(d), it will be sufficient if the Secretary's filing instructions have been published on the Commission's Web site.

The Postal Service was prompted to raise the issue of the Secretary's rejection authority by a comment made by the Secretary's staff during the Filing Online workshop held on June 12, 2002. The Postal Service understood the staff to have asserted that a pleading that serves two separate purposes would be rejected. Postal Service Comments at 5.

The Secretary's staff meant to articulate a more limited requirement. The staff meant to assert that pleadings that would normally be submitted as separate documents if they were filed in

hardcopy form should be submitted in separate Filing Records if they are submitted online. As an example of documents that would be filed separately if they were in hardcopy form, the staff mentioned a motion to accept interrogatory answers as late filed, and the interrogatory answers themselves. The staff was emphasizing the importance of submitting only one host document per Filing Record. Associating each host document with a unique Filing Record makes it easier to identify and archive documents. The staff did not mean to assert that a host document could serve only one purpose.

The Postal Service's comments, however, have drawn the Commission's attention to the desirability of requiring that each host document have a separate procedural purpose. Compound pleadings and composite motions are difficult to track and archive. If each pleading has a distinct procedural purpose it will be easier to associate it with a unique Filing Record and unique set of record identifiers. This should make it easier to track and archive pleadings. In particular, it should make it easier to track motions. Because each motion will be submitted with its own Filing Record, and would have a unique file identifier, it will make it less likely that a motion would ''fall through the cracks'' and fail to be addressed. Accordingly, the requirement that each host document serve a separate procedural purpose will be included in the Filing Online User Guide.

Under this requirement, as noted, a motion for acceptance of late-filed interrogatory answers and the interrogatory answers themselves would be filed as separate host documents in separate Filing Records. Of course, a motion that is conditioned on the disposition of another motion should prominently refer to the motion upon which it is conditioned, even though it is filed separately.

Requiring participants to plead for distinct kinds of relief and file separate host documents submitted in separate Filing Records should not add significantly to the time or expense of filing those documents if they are filed electronically. It should, however, make tracking and archiving more efficient for both the Commission and the participants.

The Postal Service observes that under the proposed rules, a participant may obtain a blanket waiver of the requirement that documents be filed online. It notes that it will be difficult to reap the benefits that an online filing system can provide if blanket waivers are commonly granted. It argues that almost all participants in past Commission proceedings have demonstrated their ability to participate electronically. It observes that even if there are future participants who do not have their own Internet connections, they should be able to access the Commission's Web site from a public library. Under these circumstances, it argues, the bar should be set quite high for anyone desiring to be excused from participating online. Postal Service Comments at 5–6.

The Postal Service discusses the burden of serving hardcopy documents on a participant who has obtained a waiver, and the burden that such a participant has of serving hardcopy documents on others. It argues that the Commission should assume responsibility for serving documents on such participants. It asserts that the Commission could consolidate all documents that need to be served on such a participant each day, and send them in a single package. This, it contends, would avoid much duplication of effort by other participants. It argues that service of hardcopy documents by a participant with a waiver also should be facilitated by the Commission. It argues that such a participant could mail or fax documents to the Commission, which could then digitize them and post them on its Web site, again avoiding duplication of effort. It argues that to be consistent with the expedited service that would characterize the Filing Online system, a participant with a waiver should be required to mail its documents to the Commission by Express Mail or facsimile transmission. It goes on to argue that service of a hardcopy document by the Commission on behalf of a participant with a waiver should be considered to be effective on the date that it is received by the Commission, presumably because the Commission will have posted the document on the day that it was received. The Postal Service suggests that this would make service computation dates consistent for all participants, whether or not they were required to file online. Postal Service Comments at 5–6.

The Commission agrees with the Postal Service that almost all participants in recent Commission proceedings have shown that they can interact with the Commission's Web site and are likely to be able to participate in the Filing Online system. The Commission expects to be able to provide participants with sufficient technical assistance to ensure that they can effectively use the Filing Online system. Under these circumstances, a participant will have a heavy burden of persuasion to overcome if it wishes to obtain a blanket waiver of the online filing requirements adopted in this order.

If a participant were to obtain a blanket waiver, the Commission will assume responsibility for serving that participant with the documents filed by other participants. As the Postal Service validly observes, the Commission could avoid duplication of effort on the part of other participants by consolidating into a single mailing each day the documents that must be served on a participant with a blanket waiver. The assumption of this responsibility by the Commission is reflected in revised rule 12(a)(2). Similarly, if a participant were to obtain a blanket waiver, the Commission would facilitate service of documents by that participant on others. Under rule 12(b), a participant with a blanket waiver would deliver hardcopy documents that it wished to serve on others to the Secretary by hand or First-Class Mail. Such documents would be deemed served when they are posted on the Commission's Web site. If for some reason such documents cannot be converted to electronic form by the Commission and posted on its Web site, they will be deemed served when the Secretary posts them as First-Class Mail.

Under a system where filing documents online is the norm, the need for filing hard copies of documents with the Commission will remain, although these instances are expected to be rare. In the notice of proposed rulemaking, proposed rule 10(b) specified that when participants are required to file documents with the Commission in hardcopy form, that they must provide the Commission with an original and 24 conforming copies. Proposed rule 10(c) specified that when participants who have obtained a waiver of the online filing requirements choose to file documents on computer media, that they must provide the Commission with an original and three conforming copies. Upon further reflection, the Commission has determined that the number of conforming copies that must be provided to the Commission under either rule 10(b) or rule 10(c) should be reduced to two.

In the rare instance when a participant has a document that it cannot digitize and file online, yet it still can feasibly serve on participants in hardcopy form (perhaps a newspaper article that it is unable to scan), the Commission is likely to be able to digitize it and to distribute it internally by posting it on its Web site. Accordingly, the Commission generally will not need to be provided with

enough hard copies of such documents to circulate them internally. Exceptions may be formal rate or classification requests. The Postal Service has been cooperative in providing as many copies of formal requests as the Commission needs.

Among the Filing Online rules contained in the notice of proposed rulemaking was rule 10(a)(2), which stated that ''[d]ocuments filed online must satisfy computer system compatibility requirements specified by the Secretary.'' The notice indicated that the Secretary would publish these requirements on the Commission's Web site in the form of instructions in the Filing Online User Guide. See order no. 1341 at 11–12. To date, the Secretary has identified and published only a few technical requirements for interfacing with the Filing Online system.

For the basic document filing function, the only technical restrictions are the formats in which documents must be submitted. Enhanced functions, such as batch downloading and batch printing, require that specified utilities be downloaded from the Commission's server.

The Commission's Web site contains a list of word processing, browser, and PC/MAC combinations that have been tested and found to be compatible with the Filing Online system. In its comments, the Postal Service infers that this (rather than the Filing Online User Guide) is the list of system compatibility requirements that the Secretary is authorized to prescribe under proposed rule 10(a)(2). It observes that there are some word processing applications that are absent from that list even though they can produce rich text format (RTF) files. It argues that it would not be prudent to bar participants from using various applications or platforms simply because they have not yet been tested. Because this list of tested platforms does not actually prescribe software or hardware that must be used in order to participate in Filing Online, the Postal Service asks what effect proposed rule 10(a)(2) is intended to have. Postal Service Comments at 7.

In arriving at its conclusion that the list of tested platforms published on the Commission's Web site was meant to implement proposed rule 10(a)(2), the Postal Service apparently overlooked the portion of the discussion of rule 10(a)(2) in the notice of proposed rulemaking that explains that the Secretary will prescribe system compatibility requirements in the Filing Online User Guide. See order no. 1341 at 11–12. The Secretary has not attempted to restrict the applications, browsers, or hardware that an account holder may use to access the Filing Online system. The Commission agrees with the Postal Service that it would not be prudent to limit the software or hardware that account holders may use simply because they have yet not been tested by the Commission. The Secretary will continue to post on the Commission's Web site, separate from the list of technical requirements, a list of software/hardware combinations that have been tested and found to be compatible with the system. It should prove useful to participants that might be deciding how to configure systems that they expect to use to access Filing Online.

Proposed rule 10 has been revised to reflect the refinements described above to Filing Online's format requirements. As a result of these revisions, proposed rule 10(a)(2) now appears as final rule 10(a)(5).

Password security is the final issue that the Postal Service's comments address. The Postal Service notes the Commission's admonition that regular password changes augment security. It asks the Commission to consider adding software that would force account holders to make regular password changes. Postal Service Comments at 8. In the Commission's view, the benefits of this change could be outweighed by the inconvenience it would cause to account holders who properly manage their passwords.

Change in the definition of account holders. Additional experience with the Filing Online system since the notice of proposed rulemaking was issued has prompted the Commission to refine the definition and role of account holders. Currently, some account holders represent themselves in proceedings before the Commission, some are attorneys who represent clients in proceedings before the Commission, and some are paralegals or secretaries who file documents on behalf of attorney representatives.

Currently, account holders must undertake the duties and obligations associated with the subscription requirement that is found in rule 11(e). These include warranting that the material submitted for filing is authorized by the participant that the account holder represents, and is authentic and accurate. Authority to provide these assurances resides with the person appearing in a proceeding on his or her own behalf or on behalf of a participant, rather than with a secretary or paralegal. Accordingly, the Commission has decided that there is a need to distinguish between types of account holders to better reflect the duties that they assume. Principal account holders are those that are able to undertake the obligations of rule 11(e) because they are appearing on their own behalf or that of a client. An agent account holder is one to whom a principal account holder has delegated authority to submit material for filing on the principal's or a client's behalf. When an agent account holder files material, the subscription obligations of rule 11(e) remain with the principal account holder who authorized the filing.

The Commission's decision to distinguish between types of account holders will not require most current account holders to take further steps to retain their Filing Online account. If a current account holder represents himself, herself, or a client, before the Commission, the Filing Online system will automatically treat such an account holder as a principal account holder.

A current account holder who does not qualify as a principal account holder, however, will have to reapply for a Filing Online account to be recognized as an agent account holder. A revised account holder application that distinguishes between principal account holders and agent account holders is provided with this order as attachment 2. After receiving a new user name and password, the agent account holder's ability to file through Filing Online will depend on the delegations of authority that appear on the Profile Pages of principal account holders. Principals will have to update their Profile Pages by furnishing, in the space provided, the user name of each agent account holder to whom they wish to delegate authority to file documents online. Agent account holders may have multiple principals. Similarly, principals may delegate their authority to file documents to other principals, as well as to agents, by furnishing the appropriate user Names on their Profile Pages. Principals who delegate their authority to file to others must take responsibility for updating their Profile Pages to reflect any changes in the identity of their delegates or agents.

User Activity Pages will be modified to reflect the distinction between principal account holders and agent account holders. An agent account holder's User Activity Page will show each document that the agent is working on, or has submitted for filing in the previous two days, and which principal has authorized it. A principal account holder's User Activity Page will show each document that the principal is working on, or has submitted for filing in the previous two days, and any agent that is assisting with the document.

Designations. Under current rule 30(e)(2), designations of written cross-

examination must be served in hardcopy form at least three working days before the witness is scheduled to appear for oral cross-examination. Under Filing Online, notice of these designations must be served by filing them online with the Commission. To make this clear, final rule 30(e)(2) will add the phrase ''in accordance with rules 9 through 12'' to the language imposing the requirement that designations be served. Current rule 30(e)(2), however, also requires that two hard copies of the designations served shall simultaneously be submitted to the Secretary of the Commission. The Commission then incorporates these hard copies in the set of designations for that witness that is received into the record during oral cross-examination. This Commission function will be performed more efficiently if the designations furnished to the Commission remain in hardcopy form. To clarify that designations of written cross-examination that are furnished to the Commission are to remain in hardcopy form, final rule 30(e)(2) will employ the phrase ''two hard copies of the documents'' to the language imposing this requirement.

Cross-examination exhibits. As initially proposed, rule 30(e)(3) would have required a participant who wished to employ complex exhibits in oral cross-examination of an opposing witness to file those exhibits online two calendar days before the scheduled appearance of the witness. As adopted in this order, rule 30(e)(3) gives the participant the option of filing such cross-examination exhibits online or providing them to counsel for the witness in hardcopy form. This flexibility will accommodate exhibits that cannot be digitized and submitted online.

The specific procedures that are proposed for filing documents online with the Secretary of the Commission are set forth in the Filing Online User Guide, which may be accessed from the Filing Online Login Page on the Commission's Web site (URL: *http://www.prc.gov*). A hardcopy of the Filing Online User Guide that has been revised to reflect the final Filing Online rules adopted in this order will also be mailed to each person who was on a service list of any Commission docket that was active within the past two years. It will also be mailed to anyone else that requests it.

Under the Filing Online procedures adopted in this order, each individual who wishes to represent a participant in a Commission proceeding must be a principal account holder. If a principal account holder wishes to delegate his authority to file documents in a proceeding, the individual to whom this authority is delegated must first become an agent account holder. An individual may become a principal account holder or an agent account holder by filling out the account holder application available by contacting the Secretary (See **ADDRESSES**) and mailing it to the Secretary. Order no. 1341, issued May 8, 2002, describes the contractual duties that an account holder undertakes, and the procedures to be followed in obtaining a permanent password.

Text of Amended Revisions

For the reasons discussed above, the Commission hereby amends subpart A of its rules of practice and procedure as set forth below to this order.

It is ordered:

1. The Commission adopts the provisions below as the final rules amending 39 CFR 3001.6, 9–13, 20, 20a, 26–28, 30, 31 and 42.

2. These rules will take effect on January 7, 2003.

3. Changes to 39 CFR 3001.31(b)(2)(vii) and 3001.31(k)(3) that were proposed in the notice of proposed rulemaking (order no. 1341, issued May 8, 2002), will be addressed in a subsequent docket.

4. The Secretary shall cause this notice and order adopting final rule to be published in the **Federal Register**.

By the Commission.

Steven W. Williams,

Secretary.

List of Subjects in 39 CFR Part 3001

Administrative practice and procedure, Postal Service

For the reasons stated in the Preamble, the Commission adopts the following amendments to 39 CFR part 3001.

PART 3001—RULES OF PRACTICE AND PROCEDURE

1. The authority citation for part 3001 continues to read as follows:

Authority: 39 U.S.C. 404(b); 3603, 3622–24, 3661, 3662, 3663.

Subpart A—Rules of General Applicability

2. Amend § 3001.6 by revising paragraphs (b) and (c) to read as follows:

§ 3001.6 Appearances.

* * * * *

(b) *Authority to act.* When an officer of any participant or an attorney acting in a representative capacity appears in person, submits a document to the Commission online as a Principal Account Holder, or signs a paper filed with the Commission, his/her personal appearance, online submission, or signature, shall constitute a representation to the Commission that he/she is authorized to represent the particular participant in whose behalf he/she acts. Any person appearing before or transacting business with the Commission in a representative capacity may be required by the Commission or the presiding officer to file evidence of his/her authority to act in such capacity.

(c) *Notice of appearance and withdrawal of appearance.* An individual intending to appear before the Commission or its presiding officer in a representative capacity for a participant in a proceeding shall file with the Commission a notice of appearance in the form prescribed by the Secretary unless that individual is named in an initial filing of the participant whom he/she represents as a person to whom communications from the Commission in regard to the filing are to be addressed. A person whose authority to represent a participant in a specific Commission proceeding has been terminated shall file a timely notice of withdrawal of appearance with the Commission.

* * * * *

3. Revise §§ 3001.9 through 3001.13 to read as follows:

§ 3001.9 Filing of documents.

(a) *Filing with the Commission.* The filing of each written document required or authorized by these rules or any applicable statute, rule, regulation, or order of the Commission, or by direction of the presiding officer shall be made using the Internet (Filing Online) pursuant to § 3001.10(a) at the Commission's Web site *http://www.prc.gov*, unless a waiver is obtained. If a waiver is obtained, a hardcopy document may be filed either by mailing or by hand delivery to the Office of the Secretary, Postal Rate Commission, 1333 H Street, NW., Suite 300, Washington, DC 20268–0001 during regular business hours on a date no later than that specified for such filing.

(b) *Account holder.* In order for a document to be accepted using Filing Online, it must be submitted to the Commission by a principal account holder or an agent account holder (Filing Online account holder). The authority of the principal account holder to represent the participant on whose behalf the document is filed must be valid and current, in conformance with § 3001.6. The authority of an agent account holder to submit documents for

a principal account holder must be valid and current. A principal account holder must promptly inform the Secretary of any change in his/her authority to represent participants in a proceeding or any change in the authority delegated to an agent account holder to submit documents on his/her behalf.

(c) *Acceptance for filing.* Only such documents as conform to the requirements of this part and any other applicable rule or order authorized by the Commission shall be accepted for filing. In order for a document to be accepted using Filing Online, it must be submitted to the Commission by a Filing Online account holder.

(1) Subject to § 3001.9(d):

(i) A document submitted through Filing Online is filed on the date indicated on the receipt issued by the Secretary. It is accepted when the Secretary, after review, has posted it on the Daily Listing page of the Commission's Web site.

(ii) A hardcopy document is filed on the date stamped by the Secretary. It is accepted when the Secretary, after review, has posted it on the Daily Listing page of the Commission's Web site.

(2) Any document received after the close of regular business hours or on a Saturday, Sunday, or holiday, shall be deemed to be filed on the next regular business day.

(d) *Rejected filings.* Any filing that does not comply with any applicable rule or order authorized by the Commission may be rejected. Any filing that is rejected is deemed not to have been filed with the Commission. If a filing is rejected, the Secretary or the Secretary's designee will notify the person submitting the filing, indicating the reason(s) for rejection. Acceptance for filing shall not waive any failure to comply with this part, and such failure may be cause for subsequently striking all or any part of any document.

§ 3001.10 Form and number of copies of documents.

(a) *Documents.* Each document filed with the Commission must be submitted through Filing Online by an account holder, unless a waiver is obtained.

(1) The text of documents filed with the Commission shall be formatted in not less than one and one-half spaced lines except that footnotes and quotations may be single spaced. Documents must be submitted in Arial 12 point font, or such program, format, or font as the presiding officer may designate.

(2) The Secretary may prescribe additional format requirements for documents submitted through Filing Online.

(3) The form of documents filed as library references is governed by § 3001.31(b)(2)(iv).

(4) Requests for changes in rates and classifications, including supporting documentation, shall be filed both online and in hardcopy form pursuant to paragraph (b) of this section.

(5) Documents filed online must satisfy Filing Online system compatibility requirements specified by the Secretary in the Filing Online User Guide, which may be accessed from the Filing Online page on the Commission's Web site, *http://www.prc.gov.*

(6) Documents requiring privileged or protected treatment shall not be filed online.

(b) *Hard copies.* Each document filed in paper form must be produced on letter-size paper, 8 to 8½ inches wide by 10½ to 11 inches long, with left- and right-hand margins not less than 1 inch and other margins not less than .75 inches, except that tables, charts or special documents attached thereto may be larger if required, provided that they are folded to the size of the document to which they are attached. If the document is bound, it shall be bound on the left side. Copies of documents for filing and service must be printed from a text-based pdf version of the document, where possible. Otherwise, they may be reproduced by any duplicating process that produces clear and legible copies. Participants in proceedings conducted under subpart H who are unable to comply with these requirements may seek to have them waived. Each person filing a hardcopy document with the Commission must provide an original and 2 fully conformed copies of the document required or permitted to be filed under this part, except for a document filed under seal, for which only the original and two (2) copies need be filed. The copies need not be signed but shall show the full name of the individual signing the original document and the certificate of service attached thereto.

(c) *Computer media.* A participant that has obtained a waiver of the online filing requirement of § 3001.9(a) may submit a document on standard PC media, simultaneously with the filing of one printed original and two hard copies, provided that the stored document is a file generated in either Acrobat (pdf), Word, or WordPerfect, or Rich Text Format (rtf).

§ 3001.11 General contents of documents.

(a) *Caption and title.* The caption of each document filed with the Commission in any proceeding shall clearly show the docket designation and title of the proceeding before the Commission. The title of such document shall identify each participant on whose behalf the filing is made and include a brief description of the document or the nature of the relief sought therein (*e.g.*, motion for extension, brief on exceptions, complaint, notice of intervention, answer to complaint).

(b) *Designation of individuals to receive service.* Each notice of intervention filed pursuant to § 3001.20 or § 3001.20a must state the name, full mailing address, telephone number, and e-mail address of up to two individuals designated to receive service of hardcopy documents relating to the proceeding.

(c) *Contents.* In the event there is no rule, regulation, or order of the Commission which specifically prescribes the contents of any document to be filed, such document shall contain a proper identification of the parties concerned and a concise but complete statement of the relief sought and of the facts and citations of authority and precedent relied upon.

(d) *Improper matter.* Defamatory, scurrilous, or unethical matter shall not be included in any document filed with the Commission.

(e) *Subscription.* Each document filed with the Commission shall be subscribed. Subscription constitutes a certification that he/she has read the document being subscribed and filed; that he/she knows the contents thereof; that if executed in any representative capacity, the document has been subscribed and executed in the capacity specified in the document with full power and authority so to do; that to the best of his/her knowledge, information and belief every statement contained in the document is true and no such statements are misleading; and that such document is not filed for purposes of delay.

(1) For a document filed via the Internet by an account holder, the subscription requirement is met when the document is filed with the Commission.

(2) For a hardcopy document filed under either § 3001.10(b) or (c), the original shall be signed in ink by the individual filing the same or by an authorized officer, employee, attorney, or other representative and all other copies of such document filed with the Commission and served on the participants in any proceeding shall be fully conformed thereto.

(f) *Table of contents.* Each document filed with the Commission consisting of 20 or more pages shall include a table

of contents with page references. For briefs see § 3001.34.

(g) *Certificate of service.* A certificate of service signed in ink must be attached to the original of each hardcopy document filed with the Commission showing service on all participants in a proceeding as prescribed by § 3001.12. All copies filed and served shall be fully conformed thereto.

§ 3001.12 Service of documents.

(a) *Service by account holders.* Each document filed in a proceeding via the Internet by an Account Holder shall be deemed served on all participants when it is accepted by the Secretary and posted on the Commission's Web site, except that:

(1) A document subject to § 3001.10(a)(4) must meet the service requirements that apply to hardcopy documents as well as those that apply to documents filed online.

(2) A document that must be served on a participant that the Commission or presiding officer has determined is unable to receive service through the Commission's Web site shall be served on such participant by the Secretary by First-Class Mail.

(b) *Service by others.* If the Commission or presiding officer has determined that a participant is unable to file documents online, documents filed by that participant must be delivered to the Secretary by hand or First-Class Mail. Such documents will be deemed served upon all participants when they are accepted by the Secretary and posted on the Commission's Web site. If such documents cannot be posted on the Commission's website, they will be deemed served on all participants when the Secretary posts them as First-Class Mail.

(c) *Service by the Commission.* Except as provided in this section, each document issued by the Commission or presiding officer shall be deemed served upon the participants in the proceeding upon its posting by the Commission on its website. Service of Commission documents on any participant that the Commission or presiding officer has determined is unable to receive service through the Commission Web site shall be by First-Class Mail.

(d) *Hardcopy documents.* Each participant filing a hardcopy document in a proceeding shall serve such document upon each person on the proceeding's service list, unless that person is subject to paragraph (b) of this section, or the Commission or presiding officer otherwise directs.

(e) *Limitation on extent of hardcopy service.* To avoid the imposition of an unreasonable burden upon participants, the Commission or the presiding officer may, by appropriate order, limit service of hardcopy documents to service upon participants intending to actively participate in the hearing, or upon a person or persons designated for properly representative groups, or by requiring the making of documents available for convenient public inspection, or by any combination of such methods.

(f) *Service list.* The Secretary shall maintain a current service list in each proceeding which shall include the participants in that proceeding and up to two individuals designated for service of documents by each participant. The service list for each current proceeding will be available on the Commission's Web site *http://www.prc.gov.* Each participant is responsible for ensuring that its listing on the Commission's Web site is accurate, and should promptly notify the Commission of any errors.

(g) *Method of hardcopy service.* Service of hardcopy documents may be made by First-Class Mail or personal delivery, to the address shown for the individuals designated on the Secretary's service list. Service of any hardcopy document upon the Postal Service shall be made by delivering or mailing six copies thereof to the address shown for the individual designated in the Secretary's service list.

(h) *Date of hardcopy service.* Whenever service is made by mail, the date of the postmark shall be the date of service. Whenever service is made by personal delivery, the date of such delivery shall be the date of service.

(i) *Form of hardcopy certificate of service.* The certificate of service of hardcopy documents shall show the name of the participant or his/her counsel making service, the date and place of service, and include the statement that ''I hereby certify that I have this day served the foregoing document upon all participants of record in this proceeding in accordance with section 12 of the rules of practice.

§ 3001.13 Docket and hearing calendar.

The Secretary shall maintain a docket of all proceedings, and each proceeding as initiated shall be assigned an appropriate designation. The Secretary shall maintain a hearing calendar of all proceedings that have been set for hearing. Proceedings shall be heard on the date set in the hearing order, except that the Commission may for cause, with or without motion, at any time with due notice to the parties advance or postpone the date of hearing. All documents filed in a docket, other than matter filed under seal, and the hearing calendar may be accessed remotely via the Commission's Web site, or viewed at the Commission's docket section during regular business hours.

4. Amend § 3001.20 by revising paragraph (c) to read as follows:

§ 3001.20 Formal intervention.

* * * * *

(c) *Form and time of filing.* Notices of intervention shall be filed no later than the date fixed for such filing in any notice or order with respect to the proceeding issued by the Commission or its Secretary, unless in extraordinary circumstances for good cause shown, the Commission authorizes a late filing. Notices of intervention shall conform to the requirements of §§ 3001.9 through 3001.12.

* * * * *

5. Amend § 3001.20a by revising paragraph (a) to read as follows:

§ 3001.20a Limited participation by persons not parties.

* * * * *

(a) *Form of intervention.* Notices of intervention as a limited participator shall be in writing, shall set forth the nature and extent of the intervenor's interest in the proceeding, and shall conform to the requirements of §§ 3001.9 through 3001.12.

* * * * *

6. Amend § 3001.26 by revising paragraphs (a) through (c) and paragraph (e) to read as follows:

§ 3001.26 Interrogatories for purpose of discovery.

(a) *Service and contents.* In the interest of expedition and limited to information which appears reasonably calculated to lead to the discovery of admissible evidence, any participant may propound to any other participant in a proceeding written, sequentially numbered interrogatories, by witness, requesting nonprivileged information relevant to the subject matter in such proceeding, to be answered by the participant served, who shall furnish such information as is available to the participant. A participant through interrogatories may require any other participant to identify each person whom the other participant expects to call as a witness at the hearing and to state the subject matter on which the witness is expected to testify. The participant propounding the interrogatories shall file them with the Commission in conformance with §§ 3001.9 through 3001.12. Follow-up interrogatories to clarify or elaborate on the answer to an earlier discovery

request may be filed after the initial discovery period ends. They must be filed within seven days of receipt of the answer to the previous interrogatory unless extraordinary circumstances are shown.

(b) *Answers.* Answers to discovery requests shall be prepared so that they can be incorporated as written cross-examination. Each answer shall begin on a separate page, identify the individual responding and the relevant testimony number, if any, the participant who asked the question, and the number and text of the question. Each interrogatory shall be answered separately and fully in writing, unless it is objected to, in which event the reasons for objection shall be stated in the manner prescribed by paragraph (c) of this section. The participant responding to the interrogatories shall file the answers in conformance with §§ 3001.9 through 3001.12 within 14 days of the filing of the interrogatories or within such other period as may be fixed by the Commission or presiding officer, but before the conclusion of the hearing.

(c) *Objections.* In the interest of expedition, the bases for objection shall be clearly and fully stated. If objection is made to part of an interrogatory, the part shall be specified. A participant claiming privilege shall identify the specific evidentiary privilege asserted and state the reasons for its applicability. A participant claiming undue burden shall state with particularity the effort that would be required to answer the interrogatory, providing estimates of cost and work hours required, to the extent possible. An interrogatory otherwise proper is not necessarily objectionable because an answer would involve an opinion or contention that relates to fact or the application of law to fact, but the Commission or presiding officer may order that such an interrogatory need not be answered until a prehearing conference or other later time. Objections shall be filed with the Commission in conformance with §§ 3001.9 through 3001.12 within 10 days of the filing of the interrogatories.

* * * * *

(e) *Compelled answers.* The Commission, or the presiding officer, upon motion of any participant to the proceeding, may compel a more responsive answer, or an answer to an interrogatory to which an objection has been raised if the objection is found not to be valid, or may compel an additional answer if the initial answer is found to be inadequate. Such compelled answers shall be filed in conformance with §§ 3001.9 through 3001.12 within seven days of the date of the order compelling an answer or within such other period as may be fixed by the Commission or presiding officer, but before the conclusion of the hearing.

* * * * *

7. Amend § 3001.27 by revising paragraphs (a) through (c) and paragraph (e) to read as follows:

§ 3001.27 Requests for production of documents or things for purpose of discovery.

(a) *Service and contents.* In the interest of expedition and limited to information which appears reasonably calculated to lead to the discovery of admissible evidence, any participant may serve on any other participant to the proceeding a request to produce and permit the participant making the request, or someone acting in his/her behalf, to inspect and copy any designated documents or things that constitute or contain matters, not privileged, that are relevant to the subject matter involved in the proceeding and that are in the custody or control of the participant to whom the request is addressed. The request shall set forth the items to be inspected either by individual item or category, and describe each item and category with reasonable particularity, and shall specify a reasonable time, place and manner of making inspection. The participant requesting the production of documents or things shall file its request with the Commission in conformance with §§ 3001.9 through 3001.12.

(b) *Answers.* The participant responding to the request shall file an answer with the Commission in conformance with §§ 3001.9 through 12 within 14 days after the request is filed, or within such other period as may be fixed by the Commission or presiding officer. The answer shall state, with respect to each item or category, that inspection will be permitted as requested unless the request is objected to pursuant to paragraph (c) of this section.

(c) *Objections.* In the interest of expedition, the bases for objection shall be clearly and fully stated. If objection is made to part of an item or category, the part shall be specified. A participant claiming privilege shall identify the specific evidentiary privilege asserted and state with particularity the reasons for its applicability. A participant claiming undue burden shall state with particularity the effort that would be required to answer the request, providing estimates of cost and work hours required, to the extent possible. Objections shall be filed with the Commission in conformance with §§ 3001.9 through 3001.12 within 10 days of the request for production.

* * * * *

(e) *Compelled answers.* Upon motion of any participant to the proceeding to compel a response to discovery, as provided in paragraph (d) of this section, the Commission or the presiding officer may compel production of documents or things to which an objection is found not to be valid. Such compelled documents or things shall be made available to the participant making the motion within seven days of the date of the order compelling production or within such other period as may be fixed by the Commission or presiding officer, but before the conclusion of the hearing. When complying with orders to produce documents or things, notice shall be filed in conformance with §§ 3001.9 through 3001.12. The Commission or the presiding officer may, on such terms and conditions as are just and reasonable, order that any participant in a proceeding shall respond to a request for inspection, and may make any protective order of the nature provided in § 3001.26(g) as may be appropriate.

8. Amend § 3001.28 by revising paragraphs (a) through (c) and paragraph (e) to read as follows:

§ 3001.28 Requests for admissions for purpose of discovery.

(a) *Service and content.* In the interest of expedition, any participant may serve upon any other participant a written request for the admission, for purposes of the pending proceeding only, of any relevant, unprivileged facts, including the genuineness of any documents or exhibits to be presented in the hearing. The participant requesting the admission shall file its request with the Commission in conformance with §§ 3001.9 through 3001.12.

(b) *Answers.* Each matter of which an admission is requested shall be separately set forth and is admitted unless within 14 days after the request is filed, or within such other period as may be fixed by the Commission or presiding officer, the participant to whom the request is directed files a written answer or objection pursuant to paragraph (c) of this section. A participant who answers a request for admission shall file its answer with the Commission in conformance with §§ 3001.9 through 3001.12.

(c) *Objections.* In the interest of expedition, the bases for objection shall be clearly and fully stated. If objection is made to part of an item, the part shall be specified. A participant claiming privilege shall identify the specific

evidentiary privilege asserted and state the reasons for its applicability. A participant claiming undue burden shall state with particularity the effort that would be required to answer the request, providing estimates of cost and work hours required to the extent possible. Objections shall be filed with the Commission in conformance with §§ 3001.9 through 3001.12, within 10 days of the request for admissions.

* * * * *

(e) *Compelled answers.* Upon motion of any participant to the proceeding the Commission or the presiding officer may compel answers to a request for admissions to which an objection has been raised if the objection is found not to be valid. Such compelled answers shall be filed with the Commission in conformance with §§ 3001.9 through 3001.12 within seven days of the date of the order compelling production or within such other period as may be fixed by the Commission or the presiding officer, but before the conclusion of the hearing. If the Commission or presiding officer determines that an answer does not comply with the requirements of this rule, it may order either that the matter is admitted or that an amended answer be filed.

9. Amend § 3001.30 by revising paragraphs (e)(2) and (e)(3) to read as follows:

§ 3001.30 Hearings.

* * * * *

(e) * * *

(2) *Written cross-examination.* Written cross-examination will be utilized as a substitute for oral cross-examination whenever possible, particularly to introduce factual or statistical evidence. Designations of written cross-examination should be served in accordance with §§ 3001.9 through 3001.12 no later than three working days before the scheduled appearance of a witness. Designations shall identify every item to be offered as evidence, listing the participant who initially posed the discovery request, the witness and/or party to whom the question was addressed (if different from the witness answering), the number of the request and, if more than one answer is provided, the dates of all answers to be included in the record. (For example, ''OCA–T1–17 to USPS witness Jones, answered by USPS witness Smith (March 1, 1997) as updated (March 21, 1997)).'' When a participant designates written cross-examination, two hard copies of the documents to be included shall simultaneously be submitted to the Secretary of the Commission. The Secretary of the Commission shall prepare for the record a packet containing all materials designated for written cross-examination in a format that facilitates review by the witness and counsel. The witness will verify the answers and materials in the packet, and they will be entered into the transcript by the presiding officer. Counsel may object to written cross-examination at that time, and any designated answers or materials ruled objectionable will be stricken from the record.

(3) *Oral cross-examination.* Oral cross-examination will be permitted for clarifying written cross-examination and for testing assumptions, conclusions or other opinion evidence. Notices of intent to conduct oral cross-examination should be filed three or more working days before the announced appearance of the witness and should include specific references to the subject matter to be examined and page references to the relevant direct testimony and exhibits. A participant intending to use complex numerical hypotheticals, or to question using intricate or extensive cross-references, shall provide adequately documented cross-examination exhibits for the record. Copies of these exhibits should be filed at least two calendar days (including one working day) before the scheduled appearance of the witness. They may be filed online or delivered in hardcopy form to counsel for the witness, at the discretion of the participant. If a participant has obtained permission to receive service of documents in hardcopy form, hardcopy notices of intent to conduct oral cross-examination of witnesses for that participant should be delivered to counsel for that participant and served three or more working days before the announced appearance of the witness, and cross-examination exhibits should be delivered to counsel for the witness at least two calendar days (including one working day) before the scheduled appearance of the witness.

* * * * *

10. Amend § 3001.31 by revising the first sentence of paragraph (b)(2)(iv) to read as follows:

§ 3001.31 Evidence.

* * * * *

(b) * * *

(2) * * *

(iv) Filing procedure. Participants filing material as a library reference shall file contemporaneous written notice of this action in conformance with §§ 3001.9 through 3001.12. * * *

* * * * *

11. Amend § 3001.42 by revising paragraph (a) to read as follows:

§ 3001.42 Public information and requests.

* * * * *

(a) *Notice and publication.* Service of intermediate and recommended decisions, advisory opinions and public reports upon parties to the proceedings is provided for in §§ 3001.12(c) and 3001.39(d). Descriptions of the Commission's organization, its methods of operation, statements of policy and interpretations, procedural and substantive rules, and amendments thereto will be filed with and published in the **Federal Register**, and are available on the Commission's Web site, *http://www.prc.gov.* Commission recommended decisions, advisory opinions and public reports, orders, and intermediate decisions will be released to the press and made available to the public promptly by posting on the Commission's Web site.

* * * * *

[FR Doc. 02–27784 Filed 11–5–02; 8:45 am]

BILLING CODE 7710–FW–P

ENVIRONMENTAL PROTECTION AGENCY

40 CFR Part 52

[IA 159–1159a; FRL–7403–7]

Approval and Promulgation of Implementation Plans; State of Iowa

AGENCY: Environmental Protection Agency (EPA).

ACTION: Direct final rule.

SUMMARY: EPA is approving the State Implementation Plan (SIP) revision submitted by the state of Iowa. This revision pertains to orders and permits issued by the state to control particulate matter (PM_{10} missions from Holnam, Inc., and Lehigh Portland Cement Company at Mason City (Cerro Gordo County), Iowa. This approval will make the orders and permits Federally enforceable.

DATES: This direct final rule will be effective January 6, 2003, unless EPA receives adverse comments by December 6, 2002. If adverse comments are received, EPA will publish a timely withdrawal of the direct final rule in the **Federal Register** informing the public that the rule will not take effect.

ADDRESSES: Comments may be mailed to Royan Teter, Environmental Protection Agency, Air Planning and Development

Branch, 901 North 5th Street, Kansas City, Kansas 66101.

Copies of documents relative to this action are available for public inspection during normal business hours at the above-listed Region 7 location. The interested persons wanting to examine these documents should make an appointment with the office at least 24 hours in advance.

FOR FURTHER INFORMATION CONTACT: Royan Teter at (913) 551–7609.

SUPPLEMENTARY INFORMATION: Throughout this document whenever ''we,'' ''us,'' or ''our'' is used, we mean EPA. This section provides additional information by addressing the following questions:

What is a SIP?
What is the Federal approval process for a SIP?
What does Federal approval of a state regulation mean to me?
What is being addressed in this document?
Have the requirements for approval of a SIP revision been met?
What action is EPA taking?

What Is a SIP?

Section 110 of the Clean Air Act (CAA) requires states to develop air pollution regulations and control strategies to ensure that state air quality meets the national ambient air quality standards (NAAQS) established by EPA. These ambient standards are established under section 109 of the CAA, and they currently address six criteria pollutants. These pollutants are: carbon monoxide, nitrogen dioxide, ozone, lead, particulate matter, and sulfur dioxide.

Each state must submit these regulations and control strategies to us for approval and incorporation into the Federally-enforceable SIP.

Each Federally-approved SIP protects air quality primarily by addressing air pollution at its point of origin. These SIPs can be extensive, containing state regulations or other enforceable documents and supporting information such as emission inventories, monitoring networks, and modeling demonstrations.

What Is the Federal Approval Process for a SIP?

In order for state regulations to be incorporated into the Federally-enforceable SIP, states must formally adopt the regulations and control strategies consistent with state and Federal requirements. This process generally includes a public notice, public hearing, public comment period, and a formal adoption by a state-authorized rulemaking body.

Once a state rule, regulation, or control strategy is adopted, the state submits it to us for inclusion into the SIP. We must provide public notice and seek additional public comment regarding the proposed Federal action on the state submission. If adverse comments are received, they must be addressed prior to any final Federal action by us.

All state regulations and supporting information approved by EPA under section 110 of the CAA are incorporated into the Federally-approved SIP. Records of such SIP actions are maintained in the Code of Federal Regulations (CFR) at Title 40, Part 52, entitled ''Approval and Promulgation of Implementation Plans.'' The actual state regulations which are approved are not reproduced in their entirety in the CFR outright but are ''incorporated by reference,'' which means that we have approved a given state regulation with a specific effective date.

What Does Federal Approval of a State Regulation Mean to Me?

Enforcement of the state regulation (this can also include state orders and permits) before and after it is incorporated into the Federally-approved SIP is primarily a state responsibility. However, after the regulation is Federally approved, we are authorized to take enforcement action against violators. Citizens are also offered legal recourse to address violations as described in section 304 of the CAA.

What Is Being Addressed in This Document?

From 1993 to 1996, there were numerous exceedances of the 24-hour PM_{10} NAAQS at the ambient air monitor located in Mason City, Iowa. The measured exceedances ranged from 172 to 286 $\mu g/m^3$. The 24-hour standard is 150 $\mu g/m^3$. Additional exceedances were recorded during 1999 and 2000.

The two major stationary facilities identified as contributors to the monitored exceedances were Lehigh Portland Cement Company and Holnam, Inc. These companies operate Portland cement production facilities in the vicinity of the PM_{10} ambient air monitor which recorded the exceedances of the NAAQS.

The Iowa Department of Natural Resources (IDNR), Air Quality Bureau, over the course of several years, developed a control strategy for each company which requires emission controls on numerous point, area, and fugitive emission sources. These requirements were incorporated into Administrative Consent Orders (A.C.O.) for each company. Additionally, permit conditions were developed or revised to reflect the A.C.O. control requirements.

The orders and permits establish enforceable (1) emission rates, (2) limitations on hours of operations, (3) limitations on daily and annual process rates (throughput), and (4) limitations on size and location of storage piles for raw material, fuels, and clinker. Fugitive emissions are to be controlled by the application of dust suppressants, sweeping, adherence to established speed limits, and limiting the number of daily and annual truck trips. Both facilities must be fenced to preclude public access. In addition, at Lehigh the coal crusher (source ID 40) is to be operated only in an enclosed structure.

Specifically, we are approving Administrative Consent Order No. 1999–AQ–31 between the IDNR and Holnam, Inc., signed by the state on September 2, 1999, and the Consent Amendment to the same order signed by the state on May 16, 2001. We are also approving the construction permits related to the A.C.O.

We are approving Administrative Consent Order No. 1999-AQ–32 between the IDNR and Lehigh Portland Cement Company signed by the state on September 2, 1999. We are also approving the construction permits related to the A.C.O.

Air quality modeling results demonstrate that the control measures contained in the Administrative Consent Orders and permits will ensure attainment and maintenance of the PM_{10} NAAQS. Additional information concerning the state submittal is contained in the technical support document for this action which is available from the EPA contact above.

Have the Requirements for Approval of a SIP Revision Been Met?

The state submittal has met the public notice requirements for SIP submissions in accordance with 40 CFR 51.102. The submittal also satisfied the completeness criteria of 40 CFR part 51, appendix V. In addition, as explained above and in more detail in the technical support document, the revision meets the substantive SIP requirements of the CAA, including section 110 and implementing regulations.

What Action Is EPA Taking?

We are approving as a revision to the Iowa SIP, A.C.Os. for Holnam, Inc., and Lehigh Portland Cement Company in Mason City, Iowa. We are also approving the related construction permits for each company. We are processing this action as a final action because we do not anticipate any

adverse comments. Please note that if EPA receives adverse comment on part of this rule and if that part can be severed from the remainder of the rule, EPA may adopt as final those parts of the rule that are not the subject of an adverse comment.

Administrative Requirements

Under Executive Order 12866 (58 FR 51735, October 4, 1993), this action is not a ''significant regulatory action'' and therefore is not subject to review by the Office of Management and Budget. For this reason, this action is also not subject to Executive Order 13211, ''Actions Concerning Regulations That Significantly Affect Energy Supply, Distribution, or Use'' (66 FR 28355, May 22, 2001). This action merely approves state law as meeting Federal requirements and imposes no additional requirements beyond those imposed by state law. Accordingly, the Administrator certifies that this rule will not have a significant economic impact on a substantial number of small entities under the Regulatory Flexibility Act (5 U.S.C. 601 *et seq.*). Because this rule approves pre-existing requirements under state law and does not impose any additional enforceable duty beyond that required by state law, it does not contain any unfunded mandate or significantly or uniquely affect small governments, as described in the Unfunded Mandates Reform Act of 1995 (Pub. L. 104–4).

This rule also does not have tribal implications because it will not have a substantial direct effect on one or more Indian tribes, on the relationship between the Federal Government and Indian tribes, or on the distribution of power and responsibilities between the Federal Government and Indian tribes, as specified by Executive Order 13175 (65 FR 67249, November 9, 2000). This action also does not have Federalism implications because it does not have substantial direct effects on the States, on the relationship between the national government and the States, or on the distribution of power and responsibilities among the various levels of government, as specified in Executive Order 13132 (64 FR 43255, August 10, 1999). This action merely approves a state rule implementing a Federal standard, and does not alter the relationship or the distribution of power and responsibilities established in the CAA. This rule also is not subject to Executive Order 13045, ''Protection of Children from Environmental Health Risks and Safety Risks'' (62 FR 19885, April 23, 1997), because it is not economically significant.

In reviewing SIP submissions, EPA's role is to approve state choices, provided that they meet the criteria of the CAA. In this context, in the absence of a prior existing requirement for the State to use voluntary consensus standards (VCS), EPA has no authority to disapprove a SIP submission for failure to use VCS. It would thus be inconsistent with applicable law for EPA, when it reviews a SIP submission, to use VCS in place of a SIP submission that otherwise satisfies the provisions of the CAA. Thus, the requirements of section 12(d) of the National Technology Transfer and Advancement Act of 1995 (15 U.S.C. 272 note) do not apply. This rule does not impose an information collection burden under the provisions of the Paperwork Reduction Act of 1995 (44 U.S.C. 3501 *et seq.*).

The Congressional Review Act, 5 U.S.C. 801 *et seq.*, as added by the Small Business Regulatory Enforcement Fairness Act of 1996, generally provides that before a rule may take effect, the agency promulgating the rule must submit a rule report, which includes a copy of the rule, to each House of the Congress and to the Comptroller General of the United States. EPA will submit a report containing this rule and other required information to the U.S. Senate, the U.S. House of Representatives, and the Comptroller General of the United States prior to publication of the rule in the **Federal Register**. A major rule cannot take effect until 60 days after it is published in the **Federal Register**. This action is not a ''major rule'' as defined by 5 U.S.C. 804(2).

Under section 307(b)(1) of the CAA, petitions for judicial review of this action must be filed in the United States Court of Appeals for the appropriate circuit by January 6, 2003. Filing a petition for reconsideration by the Administrator of this final rule does not affect the finality of this rule for the purposes of judicial review nor does it extend the time within which a petition for judicial review may be filed, and shall not postpone the effectiveness of such rule or action. This action may not be challenged later in proceedings to enforce its requirements. (See section 307(b)(2).)

List of Subjects in 40 CFR Part 52

Environmental protection, Air pollution control, Incorporation by reference, Intergovernmental relations, Particulate matter, Reporting and recordkeeping requirements, Sulfur oxides.

Dated: October 23, 2002.

William W. Rice,

Acting Regional Administrator, Region 7.

Chapter I, title 40 of the Code of Federal Regulations is amended as follows:

PART 52—[AMENDED]

1. The authority citation for part 52 continues to read as follows:

Authority: 42 U.S.C. 7401 *et seq.*

Subpart Q—Iowa

2. In § 52.820 paragraph (d) is amended by:

a. Revising the heading for paragraph (d).

b. Revising the heading for table (d).

c. Adding entries at the end of the table for Holnam, Inc., and Lehigh Portland Cement Company.

The revisions and additions read as follows:

§ 52.820 Identification of plan.

* * * * *

(d) EPA-approved State source-specific orders/permits

EPA-APPROVED IOWA SOURCE—SPECIFIC ORDERS/PERMITS

Name of source	Order/permit No.	State effective date	EPA approval date	Comments
*	*	*	*	*
Holnam, Inc	A.C.O. 1999-AQ–31	9/2/1999	November 6, 2002, and FR page citation	For a list of the 47 permits issued for individual emission points see IDNR letters to Holnam, Inc., dated 7/24/01.
Holnam, Inc	Consent Amendment to A.C.O. 1999–AQ–31.	5/16/2001	November 6, 2002, and FR page citation	For a list of the 47 permits issued for individual emission points see IDNR letters to Holnam, Inc., dated 7/24/01.

EPA-APPROVED IOWA SOURCE—SPECIFIC ORDERS/PERMITS—Continued

Name of source	Order/permit No.	State effective date	EPA approval date	Comments
Holnam, Inc	Permits for 17–01–009, Project Nos. 99–511 and 00–468.	7/24/2001	November 6, 2002, and FR page citation	For a list of the 47 permits issued for individual emission points see IDNR letters to Holnam, Inc., dated 7/24/01.
Lehigh Portland Cement Company.	A.C.O. 1999–AQ–32	9/2/1999	November 6, 2002, and FR page citation	For a list of the 41 permits issued for individual emission points see IDNR letters to Lehigh dated 7/24/01 and 2/18/02.
Lehigh Portland Cement Company.	Permits for plant No. 17–01–005, Project Nos. 99–631 and 02–037.	2/18/2002	November 6, 2002, and FR page citation	For a list of the 41 permits issued for individual emission points see IDNR letters to Lehigh dated 7/24/01 and 2/18/02.

* * * * *

[FR Doc. 02–27838 Filed 11–5–02; 8:45 am]

BILLING CODE 6560–50–P

ENVIRONMENTAL PROTECTION AGENCY

40 CFR Part 180

[OPP–2002–0224; FRL–7277–9]

Diflubenzuron; Pesticide Tolerances Correction

AGENCY: Environmental Protection Agency (EPA).

ACTION: Final rule; correction.

SUMMARY: EPA issued a final rule in the **Federal Register** of September 19, 2002, establishing tolerances for the insecticide diflubenzuron (N-[[4-chlorophenyl)amino]-carbonyl]-2,6-difluorobenzamide) and its metabolites, 4-chlorophenylurea (CPU) and 4-chloroaniline (PCA) in or on various commodities. This document is being issued to correct inadvertent omissions in that document.

DATES: This document is effective on November 6, 2002.

FOR FURTHER INFORMATION CONTACT: Rita Kumar, Registration Division (7505C), Office of Pesticide Programs, Environmental Protection Agency, 1200 Pennsylvania Ave., NW., Washington, DC 20460–0001; telephone number: (703) 308–8291; e-mail address: *kumar.rita@epa.gov.*

SUPPLEMENTARY INFORMATION:

I. General Information

A. Does This Action Apply to Me?

The Agency included in the final rule a list of those who may be potentially affected by the action. If you have any questions regarding the applicability of this action to a particular entity, consult the person listed under **FOR FURTHER INFORMATION CONTACT**.

B. How Can I Get Copies of this Document and Other Related Information?

1. *Docket.* EPA has established an official public docket for this action under docket ID number OPP–2002–0224. The official public docket consists of the documents specifically referenced in this action, any public comments received, and other information related to this action. Although a part of the official docket, the public docket does not include Confidential Business Information (CBI) or other information whose disclosure is restricted by statute. The official public docket is the collection of materials that is available for public viewing at the Public Information and Records Integrity Branch (PIRIB), Rm. 119, Crystal Mall #2, 1921 Jefferson Davis Hwy., Arlington, VA. This docket facility is open from 8:30 a.m. to 4 p.m., Monday through Friday, excluding legal holidays. The docket telephone number is (703) 305–5805.

2. *Electronic access.* You may access this **Federal Register** document electronically through the EPA Internet under the ''**Federal Register**'' listings at *http://www.epa.gov/fedrgstr/.* A frequently updated electronic version of 40 CFR part 180 is available at *http://www.access.gpo.gov/nara/cfr/cfrhtml_00/Title_ 40/40cfr180_00.html,* a beta site currently under development.

An electronic version of the public docket is available through EPA's electronic public docket and comment system, EPA Dockets. You may use EPA Dockets at *http://www.epa.gov/edocket/* to submit or view public comments, access the index listing of the contents of the official public docket, and to access those documents in the public docket that are available electronically. Once in the system, select ''search,'' then key in the appropriate docket ID number.

II. What Does this Correction Do?

In the **Federal Register** of September 19, 2002 (67 FR 59006) (FRL–7200–4), EPA issued tolerances for the insecticide diflubenzuron (N-[[4-chlorophenyl)amino]-carbonyl]-2,6-difluorobenzamide) and its metabolites, 4-chlorophenylurea (CPU) and 4-chloroaniline (PCA) in or on various commodities. This document is being issued to correct two inadvertent omissions in that document.

FR Doc. 02–23818 is corrected as follows:

1. On page 59013, in the middle column, second full paragraph from the top, the fourth sentence should read: ''There are reliable data that indicate there are no residual concerns for pre- and/or post-natal toxicity.''

2. On page 59015, under Unit IV., section *B. International Residue Limits* should read: ''Codex and Mexican maximum residue limits (MRLs) are established for residues of diflubenzuron *per se* in/on plums (including prunes) at 1 ppm. Mexican MRLs are established for residues of diflubenzuron *per se.* Use of diflubenzuron in Canada is limited to mosquito control; therefore, no Canadian MRLs have been established. Based on the current tolerance expression, the Codex and U.S. tolerance definitions are not compatible.''

III. Why Is This Correction Issued as a Final Rule?

Section 553 of the Administrative Procedure Act (APA), 5 U.S.C. 553(b)(B), provides that, when an Agency for good cause finds that notice and public procedure are impracticable, unnecessary or contrary to the public interest, the agency may issue a final rule without providing notice and an opportunity for public comment. EPA has determined that there is good cause for making today's correction final without prior proposal and opportunity for comment, because EPA is merely

inserting language that was inadvertently omitted from the previously published final rule. EPA finds that this constitutes good cause under 5 U.S.C. 553(b)(B).

IV. Do Any of the Regulatory Assessment Requirements Apply to This Action?

This document makes minor corrections to the preamble of the final rule issued on September 19, 2002, and it does not otherwise impose or amend any requirements. As such, the Office of Management and Budget (OMB) has determined that a technical correction is not a ''significant regulatory action'' subject to review by OMB under Executive Order 12866, entitled *Regulatory Planning and Review* (58 FR 51735, October 4, 1993). Because this rule has been exempted from review under Executive Order 12866 due to its lack of significance, this rule is not subject to Executive Order 13211, entitled *Actions Concerning Regulations That Significantly Affect Energy Supply, Distribution, or Use* (66 FR 28355, May 22, 2001). This final rule does not contain any information collections subject to OMB approval under the Paperwork Reduction Act (PRA), 44 U.S.C. 3501 *et seq.*, or impose any enforceable duty or contain any unfunded mandate as described under Title II of the Unfunded Mandates Reform Act of 1995 (UMRA) (Public Law 104–4). Nor does it require any special considerations under Executive Order 12898, entitled *Federal Actions to Address Environmental Justice in Minority Populations and Low-Income Populations* (59 FR 7629, February 16, 1994); or OMB review or any Agency action under Executive Order 13045, entitled *Protection of Children from Environmental Health Risks and Safety Risks* (62 FR 19885, April 23, 1997). This action does not involve any technical standards that would require Agency consideration of voluntary consensus standards pursuant to section 12(d) of the National Technology Transfer and Advancement Act of 1995 (NTTAA), Public Law 104–113, section 12(d) (15 U.S.C. 272 note). Since this action does not require the issuance of a proposed rule, the requirements of the Regulatory Flexibility Act (RFA) (5 U.S.C. 601 *et seq.*) do not apply. In addition, the Agency has determined that this action will not have a substantial direct effect on States, on the relationship between the national government and the States, or on the distribution of power and responsibilities among the various levels of government, as specified in Executive Order 13132, entitled *Federalism*(64 FR 43255, August 10, 1999). Executive Order 13132 requires EPA to develop an accountable process to ensure ''meaningful and timely input by State and local officials in the development of regulatory policies that have federalism implications.'' ''Policies that have federalism implications'' is defined in the Executive Order to include regulations that have ''substantial direct effects on the States, on the relationship between the national government and the States, or on the distribution of power and responsibilities among the various levels of government.'' This action does not alter the relationships or distribution of power and responsibilities established by Congress in the preemption provisions of FFDCA section 408(n)(4). For these same reasons, the Agency has determined that this rule does not have any ''tribal implications'' as described in Executive Order 13175, entitled *Consultation and Coordination with Indian Tribal Governments* (65 FR 67249, November 6, 2000). Executive Order 13175, requires EPA to develop an accountable process to ensure ''meaningful and timely input by tribal officials in the development of regulatory policies that have tribal implications.'' ''Policies that have tribal implications'' is defined in the Executive Order to include regulations that have ''substantial direct effects on one or more Indian tribes, on the relationship between the Federal government and the Indian tribes, or on the distribution of power and responsibilities between the Federal government and Indian tribes.'' This rule will not have substantial direct effects on tribal governments, on the relationship between the Federal government and Indian tribes, or on the distribution of power and responsibilities between the Federal government and Indian tribes, as specified in Executive Order 13175. Thus, Executive Order 13175 does not apply to this rule.

V. Submission to Congress and the Comptroller General

The Congressional Review Act, 5 U.S.C. 801 *et seq.*, as added by the Small Business Regulatory Enforcement Fairness Act of 1996, generally provides that before a rule may take effect, the agency promulgating the rule must submit a rule report, which includes a copy of the rule, to each House of the Congress and to the Comptroller General of the United States. EPA will submit a report containing this rule and other required information to the U.S. Senate, the U.S. House of Representatives, and the Comptroller General of the United States prior to publication of this final rule in the **Federal Register**. This final rule is not a ''major rule'' as defined by 5 U.S.C. 804(2).

List of Subjects in 40 CFR Part 180

Environmental protection, Administrative practice and procedure, Agricultural commodities, Pesticides and pests, Reporting and recordkeeping requirements.

Dated: October 21, 20002.

Debra Edwards,

Acting Director, Registration Division, Office of Pesticide Programs.

[FR Doc. 02–27840 Filed 11–5–02; 8:45 am]

BILLING CODE 6560–50–S

FEDERAL COMMUNICATIONS COMMISSION

47 CFR Part 1

[WC Docket No. 02–269; FCC 02–291]

Federal-State Joint Conference on Accounting Issues

AGENCY: Federal Communications Commission.

ACTION: Final rule.

SUMMARY: In this document the Commission appoints State representatives to the Federal-State Joint Conference on Accounting Issues (Joint Conference). Chairman Michael K. Powell also designates the Honorable Kevin J. Martin as the Chairman of the Joint Conference. The Honorable Michael J. Copps will serve as a participating federal member. The intended effect of this document is to provide a forum for an ongoing dialogue between the Commission and the states in order to ensure that regulatory accounting data and related information filed by carriers are adequate, truthful, and thorough. *See* 47 U.S.C. 410(b).

FOR FURTHER INFORMATION CONTACT: Joi Roberson Nolen, Wireline Competition Bureau, 202–418–1537.

SUPPLEMENTARY INFORMATION: Pursuant to section 410(b) of the Communications Act of 1934, as amended, 47 U.S.C. 410(b), the Commission appoints the following State representatives to the Joint Conference: the Honorable Nancy Brockway, Commissioner, New Hampshire Public Utilities Commission; the Honorable Terry Deason, Commissioner, Florida Public Service Commission; the Honorable Rebecca A. Klein, Chairman, Texas Public Utility Commission; the Honorable Loretta Lynch, President, California Public Utilities Commission; and the

Honorable Diane Munns, Chairman, Iowa Utilities Board. The Honorable Kevin J. Martin is designated to serve as the Chairman of the Joint Conference. The Honorable Michael J. Copps will serve as a participating federal member. Henceforth, a copy of each filing in this proceeding shall be served on each member of the Joint Conference at the addresses listed in appendix A of the Order. Accordingly, *it is ordered* that, pursuant to section 410(b) of the Communications Act of 1934, as amended, 47 U.S.C. 410(b), this Order is adopted.

List of Subjects in 47 CFR Part 1

Administrative practices and procedures, Communications common carriers.

Federal Communications Commission.

Marlene H. Dortch,

Secretary.

[FR Doc. 02–27977 Filed 11–5–02; 8:45 am]

BILLING CODE 6712–01–P

FEDERAL COMMUNICATIONS COMMISSION

47 CFR Part 73

[DA 02–2694; MM Docket No. 99–322; RM–9762]

Radio Broadcasting Services; Ashville and Chillicothe, OH.

AGENCY: Federal Communications Commission.

ACTION: Final rule.

SUMMARY: In response to a petition for rule making in this filed by Secret Communications II, L.L.C. this document reallots Channel 227B from Chillicothe, Ohio, to Ashville, Ohio, and modifies the license of Station WFCB to specify Ashville as its community of license. *See* 64 FR 60150, November 1, 1999. The reference coordinates for the Channel 227B allotment at Ashville, Ohio, are 39–35–30 and 83–06–38. With this action, the proceeding is terminated.

DATES: Effective December 5, 2002.

FOR FURTHER INFORMATION CONTACT: Robert Hayne, Media Bureau (202) 418–2177.

SUPPLEMENTARY INFORMATION: This is a synopsis of the *Report and Order* in MM Docket No. 99–322 adopted October 16, 2002, and released October 18, 2002. The full text of this decision is available for inspection and copying during normal business hours in the FCC Reference Information Center at Portals II, CY–A257, 445 12th Street, SW., Washington, DC. The complete text of this decision may also be purchased from the Commission's copy contractor, Qualex International, Portals II, 445 12th Street, SW., Room CY–402, Washington, DC 20554, telephone (202) 863–2893, facsimile (202) 863–2898, or via e-mail *qualixint@aol.com.*

List of Subjects in 47 CFR Part 73

Radio, Radio broadcasting.

Part 73 of the Code of Federal Regulations is amended as follows:

PART 73—RADIO BROADCAST SERVICES

1. The authority citation for Part 73 continues to read as follows:

Authority: 47 U.S.C. 154, 303, 334 and 336.

§ 73.202 [Amended]

2. Section 73.202(b), the Table of FM Allotments under Ohio, is amended by adding Ashville, Channel 227B and by removing Channel 227B at Chillicothe.

Federal Communications Commission.

John A. Karousos,

Assistant Chief, Audio Division, Media Bureau.

[FR Doc. 02–28162 Filed 11–5–02; 8:45 am]

BILLING CODE 6712–01–P

FEDERAL COMMUNICATIONS COMMISSION

47 CFR Part 73

[DA 02–2695; MM Docket No. 02–119; RM–10435]

Radio Broadcasting Services; Clarksdale and Friars Point, MS

AGENCY: Federal Communications Commission.

ACTION: Final rule.

SUMMARY: In response to a *Notice of Proposed Rule Making*, 67 FR 39935 (June 11, 2002), this document upgrades Channel 268A, Station WWUN–FM, Clarksdale, Mississippi, to Channel 268C3, changes the community of license of Station WWUN-FM from Clarksdale to Friars Point, Mississippi, and provides Friars Point with its second local aural transmission service. The coordinates for Channel 268C3 at Friars Point are 34–25–30 North Latitude and 90–35–39 West Longitude, with a site restriction 7.8 kilometers (4.8 miles) northeast of Friars Point.

DATES: Effective December 2, 2002.

FOR FURTHER INFORMATION CONTACT: R. Barthen Gorman, Media Bureau, (202) 418–2180.

SUPPLEMENTARY INFORMATION: This is a synopsis of the Commission's Report and Order, MM Docket No. 02–119, adopted October 9, 2002, and released October 18, 2002. The full text of this Commission decision is available for inspection and copying during normal business hours in the FCC's Reference Information Center at Portals II, CY–A257, 445 12th Street, SW., Washington, DC. This document may also be purchased from the Commission's duplicating contractors, Qualex International, Portals II, 445 12th Street, SW., Room CY–B402, Washington, DC, 20554, telephone 202–863–2893, facsimile 202–863-2898, or via e-mail *qualexint@aol.com.*

List of Subjects in 47 CFR Part 73

Radio, Radio broadcasting.

Part 73 of Title 47 of the Code of Federal Regulations is amended as follows:

PART 73—RADIO BROADCAST SERVICES

1. The authority citation for Part 73 reads as follows:

Authority: 47 U.S.C. 154, 303, 334 and 336.

§ 73.202 [Amended]

2. Section 73.202(b), the Table of FM Allotments under Mississippi, is amended by removing Channel 268A at Clarksdale and by adding Channel 268C3 at Friars Point.

Federal Communications Commission.

John A. Karousos,

Assistant Chief, Audio Division, Media Bureau.

[FR Doc. 02–28161 Filed 11–5–02; 8:45 am]

BILLING CODE 6712–01–P

DEPARTMENT OF COMMERCE

National Oceanic and Atmospheric Administration

50 CFR Part 648

[Docket No. 020329075–2124–03; I.D. 031902E]

RIN 0648–AP11

Fisheries of the Northeastern United States; Magnuson-Stevens Fishery Conservation and Management Act Provisions; Monkfish Fishery

AGENCY: National Marine Fisheries Service (NMFS), National Oceanic and Atmospheric Administration (NOAA), Commerce.

ACTION: Extension of an emergency interim rule.

SUMMARY: NMFS informs the public that the emergency interim rule published

on May 22, 2002, that temporarily amended the fishing mortality rate (F) criteria in the Monkfish Fishery Management Plan (FMP) to be consistent with the best scientific information available, and which implemented the management measures proposed in Framework 1 to the FMP, is extended through April 30, 2003. The purpose of this emergency interim rule extension is to delay further the implementation of restrictive Year–4 default management measures that were scheduled to become effective on May 1, 2002, in the FMP, and to continue measures implemented for the monkfish fishery that are based on the best scientific information.

DATES: The expiration date of the emergency interim rule, published May 22, 2002 (67 FR 35928), and effective on May 17, 2002, is extended from November 18, 2002, to April 30, 2003.

ADDRESSES: Copies of the small entity compliance guide prepared for the monkfish emergency rule are available from Patricia Kurkul, Regional Administrator, Northeast Regional Office, National Marine Fisheries Service, One Blackburn Drive, Gloucester, MA 01930–2298. The guide is also accessible via the Internet at *http://www.nero.noaa.gov.*

FOR FURTHER INFORMATION CONTACT: Allison Ferreira, Fishery Policy Analyst, (978) 281–9103, fax (978) 281–9135, e-mail *Allison.Ferreira@noaa.gov.*

SUPPLEMENTARY INFORMATION:

Background

The directed monkfish fishery closed on May 1, 2002, due to the implementation of default management measures scheduled to take effect during Year 4 of the FMP (May 1, 2002 - April 30, 2003). The Year–4 default measures were included in the FMP to ensure that the FMP objectives were attained. These measures eliminate the directed monkfish fishery by allocating zero monkfish days-at-sea (DAS), and by allowing only incidental landings of monkfish. The New England and Mid-Atlantic Fishery Management Councils (Councils) developed Framework 1 to the FMP in order to delay the implementation of the Year–4 default management measures for 1 year, until May 1, 2003, and to implement alternative measures for Year–4, since a 3–year review of the status of the monkfish stock determined that the implementation of these restrictive default measures was not necessary. However, following the submission of Framework 1 by the Councils to NMFS, and the publication of a proposed rule, it was determined that Framework 1 was not consistent with the F criteria specified in the FMP. As a result, NMFS disapproved Framework 1 and implemented an emergency interim rule that temporarily amended the F criteria in the FMP to be consistent with the most recent stock assessment (SAW 34; January 2002). In this same regulatory action, NMFS implemented the measures proposed in Framework 1 because, with the amendment of the F criteria in the FMP through the emergency interim rule, the measures were found to be consistent with the best available scientific information.

This action extends the emergency interim measures for 163 days, effective November 19, 2002, through April 30, 2002. Emergency interim measures extended by this action include a target total allowable catch (TAC) of 19,595 metric tons (mt) for the 2002 fishing year (May 1, 2002 - April 30, 2003), with area-specific TACs of 11,674 mt and 7,921 mt for the Northern Fishery Management Area (NFMA) and the Southern Fishery Management Area (SFMA), respectively; allocation of 40 DAS to limited access monkfish vessels for the 2002 fishing year (May 1, 2002 - April 30, 2003); a revision to the monkfish trip limits in the SFMA to 550 lb (249 kg) (tail weight per DAS) for vessel permit categories A and C, and 450 lb (204 kg) (tail weight per DAS) for vessel permit categories B and D while fishing on a monkfish DAS in the SFMA; and maintenance of all other measures as established for Year 3 of the FMP, including less restrictive incidental catch limits.

Comments and Responses

Comment 1: NMFS failed to justify the need for emergency action under section 305(c) of the Magnuson-Stevens Fishery Conservation and Management Act (Magnuson-Stevens Act). The argument used by NMFS in justifying the emergency interim rule had no merit.

Response: There was substantial justification for the need for the emergency interim rule in the May 22, 2002, **Federal Register** rule implementing this action, and the accompanying environmental assessment (EA). These documents discuss in detail how the emergency interim rule meets the ''emergency criteria'' and ''emergency justification'' for determining the appropriateness of section 305 (c) rulemaking outlined in NMFS' Policy Guidelines for the Use of Emergency Rules (Emergency Guidelines) found at 62 FR 44421, *et seq.* (August 21, 1997). In summary, these documents stated that implementing the action through section 305(c) emergency authority is justifiable because the need to disapprove the framework action and immediately amend the FMP to make it compatible with the best scientific information available only became discoverable after NMFS had the time to fully evaluate the framework action after the public comment period had ended, thus creating a ''recently discovered circumstance''. In addition, to have delayed the incorporation of the newest science into the FMP and delayed implementation of the action necessary to avoid the default measures would have resulted in substantial, unwarranted and unnecessary economic harm to the industry and would have likely caused wasteful bycatch of monkfish in other fisheries.

Comment 2: The emergency action does not contain any analysis showing whether or not it will halt monkfish overfishing this year or allow rebuilding by 2009.

Response: NMFS considered all available information regarding the stock biomass level and fishing mortality rate in its decision to implement the emergency interim rule. The fact that stock biomass has increased significantly from 2000 to 2001 in both management areas at current landing levels indicates that the level of fishing mortality resulting from the measures in this action should allow the stock to continue rebuilding. Therefore, there is no evidence that these measures will prevent rebuilding by 2009. Furthermore, the emergency interim rule and this extension postpone the default measures for only 1 year; in the absence of any further management action, the default measures will become effective on May 1, 2003. Both Councils intend to reconsider fully the best available scientific information in the development of revised overfishing definitions in Framework 2, which is scheduled to be implemented at the start of the 2003 fishing year on May 1, 2003.

Comment 3: The emergency interim rule does not adequately assess and minimize the impacts on essential fish habitat (EFH). Of particular concern, the EA prepared for the emergency interim rule fails to discuss the impacts of fishing gear on deep sea corals in the continental slope habitats and on emergent epifauna on hard bottom.

Response: NMFS disagrees, and notes that the EA prepared for the emergency interim rule contains an EFH assessment as required by the Magnuson-Stevens Act. A comprehensive assessment of the adverse effects of fishing on EFH is not

within the scope and context of this emergency action. Furthermore, the commenter is a party to the litigation that challenged the consideration of EFH in the FMP (American Oceans Campaign v. Daley (D.D.C. 2000)). NMFS and the litigants have signed a settlement agreement in that case, and have agreed that EFH will be fully reconsidered in Amendment 2 to the FMP, which is scheduled to be implemented during the fall of 2003. In the meantime, the settlement agreement contemplates that the comprehensive assessment of the adverse effects of fishing on EFH that was included in the New England Council's EFH amendment to the FMP (Amendment 1) may be relied upon. Further, since this action makes no change in effort from the prior year, there should be no change in habitat impacts from those described for the first 3 years of the FMP.

The commenter expressed specific concern about gillnet impacts on deep-sea corals. Such corals are not designated as EFH for any species in waters off of the northeastern United States, so it is not necessary to address impacts to deep-sea corals in order to comply with EFH requirements. Further, according to the NMFS Report on Fishing Gear Effects on Marine Habitats off the Northeastern United States (February 2002), there is very little sink gillnet fishing gear used in waters deeper than 100 m or in submarine canyons, which is where most of such corals exist.

Comment 4: The emergency interim rule fails to establish a standardized bycatch reporting methodology, or to minimize bycatch and bycatch mortality as required by the Sustainable Fisheries Act and recent case law. Of particular concern are the capture of deep-sea species such as deep-sea jelly fish, octopi, and sharks as the monkfish fishery extends its range further offshore.

Response: The existing data collection system requires vessel operators to provide bycatch data on mandatory Vessel Trip Reports that must be submitted for each fishing trip. In addition, detailed information is collected through the NMFS Observer Program, which deploys trained independent observers on commercial vessels. NMFS is currently increasing the amount of observer coverage on vessels fishing for Northeast multispecies, and this action will likely result in further information concerning monkfish, as well. NMFS agrees that, in the long term, it must improve the collection of bycatch information, but disagrees that the emergency interim rule should be suspended because it does not address this issue. As stated in the EA for the emergency interim rule, to effectively address bycatch assessment concerns would require a global set of measures applicable to all of the Northeast region's fisheries, since most vessels in the region are involved in a variety of fisheries, even during one fishing trip. NMFS is committed to improving bycatch assessment, as evidenced by the settlement agreement entered into with the other litigatory parties in *Conservation Law Foundation, et al.* v. *Evans, et al.* It is beyond the scope and context of the emergency interim rule process to require a global system of measures to be established to improve bycatch monitoring, assessment and reduction in only one fishery.

With respect to minimizing bycatch, NMFS notes that national standard 9 requires minimization of bycatch to the extent practicable. The EA prepared for the emergency interim rule notes that, with the stock biomass increasing, there is an increased likelihood that vessels targeting other species will incidentally harvest monkfish. Therefore, if the emergency interim rule were not extended and Year–4 default management measures became effective, the directed fishery would be completely eliminated and vessels that previously participated in that fishery would be expected to target other species. As such, the default measures would be expected to increase bycatch and bycatch mortality, providing no improved conservation to the stock.

With respect to the commenter's specific concern about bycatch of deep-sea animals, NMFS notes that the 2001 cooperative survey, upon which this comment is based, provided new information that will be fully considered by the Councils as they develop Amendment 2 to the FMP. NMFS also notes that the trip limits established for the SFMA fishery under the emergency interim rule and this emergency rule extension are restrictive and unlikely to support a directed fishery offshore.

Comment 5: The environmental analysis accompanying the emergency action is deficient, and the magnitude of the impacts require the preparation of an environmental impact statement (EIS) rather than an EA.

Response: Although NMFS agrees with the commenter that this action makes a modification from the measures contemplated for Year–4 in the FMP, NMFS has determined that this action does not have significant impacts that would require the preparation of an EIS, as discussed in the EA and its Finding of No Significant Impact (FONSI) statement. In support of their comment that an EIS should have been prepared for this action, the commenters mostly rely on comments already addressed herein concerning consistency of the action with FMP overfishing and rebuilding objectives, bycatch methodologies and minimization, and EFH concerns. These concerns are addressed under Responses to Comments 2, 3 and 4. As explained in the responses to these comments, because this action is for 1 year only, because an EIS is being prepared for Amendment 2, and for other reasons stated in the EA and its FONSI, NMFS concludes that an EA is appropriate for this emergency action.

Classification

The Assistant Administrator for Fisheries, NOAA (AA), has determined that this extension is needed to prevent the restrictive Year–4 default management measures from taking effect on November 19, 2002. Extending the current management measures established by the emergency interim rule (67 FR 35928, May 22, 2002) through implementation of Framework 2 on May 1, 2003, is necessary to prevent substantial, unwarranted and unnecessary economic harm to the industry and a likely increase in monkfish bycatch in other fisheries as a result of terminating the directed monkfish fishery. Accordingly, the AA is extending the expiration date of this emergency interim rule until the effective date of the 2003 management measures, not to exceed 180 days.

This final rule has been determined to be not significant for purposes of Executive Order 12866.

NMFS prepared a final regulatory flexibility analysis (FRFA) for this action. A summary of the FRFA follows.

A description of the objectives of the emergency interim rule and the need for this extension are explained in the preamble for this action and are not repeated here. This action does not contain any collection-of-information, reporting, record-keeping, or other compliance requirements. It does not duplicate, overlap, or conflict with any other Federal rules.

One public comment was received on the emergency interim rule. However this comment did not address any of the economic impacts associated with the implementation of this rule.

The measures contained in the emergency interim rule and its proposed extension potentially affect the approximately 704 vessels that currently hold a limited access monkfish permit. According to the analysis presented in

the environmental assessment (EA) prepared for the emergency interim rule, the preferred alternative (implementation of the emergency interim rule) was expected to result in loss of income from fishing year 2000 levels for several vessel types. However, these projected losses in income were lower than the losses that would result from implementation of either the non-preferred or no action alternatives. Therefore, because the analysis showed that the emergency interim rule would have the least effect on small entities compared to the non-preferred and no action alternatives, this preferred alternative was selected.

Section 212 of the Small Business Regulatory Enforcement Fairness Act of 1996 (SBREFA) states that for each rule or group of related rules for which an agency is required to prepare a FRFA, the agency shall publish one or more guides to assist small entities in complying with the rule, and shall designate such publications as ''small entity compliance guides''. The agency shall explain the actions a small entity is required to take to comply with a rule or group of rules. As part of this rulemaking process, a small entity compliance guide (the guide) was prepared. Copies of the guide will be sent to all holders of permits issued for the monkfish fishery. The guide will be available on the Internet at *http://www.nero.noaa.gov.* Copies of the guide can also be obtained from the Regional Administrator (see **ADDRESSES**).

Authority: 16 U.S.C. 1801 *et seq.*

Dated: October 31, 2002.

Rebecca Lent,

Deputy Assistant Administrator for Regulatory Programs, National Marine Fisheries Service.

[FR Doc. 02–28196 Filed 11–1–02; 2:10 pm]

BILLING CODE 3510–22–S

Proposed Rules

Federal Register
Vol. 67, No. 215
Wednesday, November 6, 2002

This section of the FEDERAL REGISTER contains notices to the public of the proposed issuance of rules and regulations. The purpose of these notices is to give interested persons an opportunity to participate in the rule making prior to the adoption of the final rules.

DEPARTMENT OF HEALTH AND HUMAN SERVICES

Food and Drug Administration

21 CFR Part 589

[Docket No. 02N–0273]

RIN 0910–AC37

Substances Prohibited From Use in Animal Food or Feed; Animal Proteins Prohibited in Ruminant Feed

AGENCY: Food and Drug Administration, HHS.

ACTION: Advance notice of proposed rulemaking.

SUMMARY: The Food and Drug Administration (we) is soliciting information and views on some potential changes to its current regulation prohibiting the use of certain proteins in ruminant animal feed. We put this regulation in place to prevent the spread through animal feed of the agent of bovine spongiform encephalopathy (BSE) were it to enter the United States. In this regulation we determined that protein derived from mammalian tissues for use in ruminant feed is a food additive under the Federal Food, Drug, and Cosmetic Act (the act), and that use of certain mammalian proteins in ruminant feed causes the feed to be adulterated under the act. We are considering revising this regulation, and therefore we are asking the public for comment on certain possible modifications to the rule. This information may be used to help draft a proposed rule in the near future.

DATES: Submit written or electronic comments by February 4, 2003.

ADDRESSES: Submit written or electronic comments to the Dockets Management Branch (HFA–305), Food and Drug Administration, 5630 Fishers Lane, rm. 1061, Rockville, MD 20852. Submit electronic comments to *http://www.fda.gov/dockets/ecomments*.

FOR FURTHER INFORMATION CONTACT: Linda Huntington, Executive Secretariat, Office of the Commissioner (HF–40), Food and Drug Administration, 5600 Fishers Lane, Rockville, MD 20857, 301–827–4443.

SUPPLEMENTARY INFORMATION:

I. Background

We published the regulation, ''Substances Prohibited From Use in Animal Food or Feed; Animal Proteins Prohibited in Ruminant Feed,'' (21 CFR 589.2000) in the **Federal Register** of June 5, 1997 (62 FR 30936).

On October 30, 2001, we held a public hearing in Kansas City, MO to hear views from the public on the adequacy of the present BSE feed regulation. We specifically invited comments, both oral and written, on 17 questions about ways the rule and its enforcement might be improved to achieve its original objectives of preventing the establishment and amplification of BSE in the United States. We appreciate the efforts of the many organizations and individuals who took the time to express the views of various segments of the animal feed industry, regulatory agencies, concerned consumers, and consumer organizations on the adequacy of the present feed rule.

Shortly after the public hearing, the U.S. Department of Agriculture (USDA) released a report prepared by the Harvard Center for Risk Analysis (*http://www.aphis.usda.gov/oa/bse/*) on the findings of a major 3-year initiative to develop a risk assessment model that allows evaluation of the impact of various risks and potential pathways for exposure of U.S. cattle and U.S. citizens to the BSE agent. The assessment of the present situation in the United States using this model concluded that, due to control measures already in place, the risk to U.S. cattle and to U.S. consumers from BSE is very low. The model also demonstrated that certain new control measures could reduce the small risk even further.

USDA's BSE surveillance program supports the findings of the Harvard study that measures implemented by the U.S. Government, such as early import restrictions and the feed ban, have been effective in preventing the entrance and establishment of BSE in the U.S. cattle population. The USDA surveillance program, which has been in place since May 1990 and which targets the highest risk cattle population, has found no cases of BSE to date. Although BSE has not been detected in the United States, the U.S. Government's response to BSE has always been proactive and preventive. Therefore, USDA and FDA are interested in exploring measures that could further reduce the already small risk that BSE will enter and become established in the United States. To that end, FDA is once again asking for information from the affected industries and the public on several ways that the animal feed regulation could be strengthened.

II. Agency Request for Information

We are soliciting information and comments from those with interest and expertise in any of the following five aspects of the BSE feed regulation:

1. Excluding Brain and Spinal Cord From Rendered Animal Products

The Harvard risk assessment identified removal of high risk tissues, such as brain, spinal cord, gut, and eyes, from human food and rendered material for animal feed, as a way to dramatically reduce the potential exposure of cattle and humans to the BSE agent. In response to the Harvard study, USDA's Food Safety Inspection Service is considering rulemaking to ban high risk tissues obtained from certain populations of cattle (also called specified risk materials or SRMs) from use in human food. Should USDA publish such a proposal, FDA may also propose that SRMs be prohibited from going into rendered material. Therefore, FDA is asking for comments on the following questions:

- Should high risk materials, such as brain and spinal cord from ruminants 2 years of age and older, be excluded from all rendered products?
- How feasible would it be for the rendering industry to implement such an exclusion?
- What will be the adverse and positive impacts (economic, environmental, health, etc.) resulting from a brain and spinal cord exclusion?

2. Use of Poultry Litter In Cattle Feed

In some parts of the country where cattle are raised in proximity to large poultry production areas, poultry litter, composed of excreta, bedding, spilled feed, and feathers, may be used as a feed ingredient for cattle. The Harvard risk assessment said that the risk from the use of poultry litter as a feed supplement should be investigated

further. For example, if the spilled feed contained ruminant protein, would this practice represent a significant break in the feed regulations? In order to further investigate possible risk, FDA is seeking information on the following questions:

• How extensive is the use of poultry litter in cattle feed in the United States?

• What is the level of feed spillage in poultry litter?

• What are the methods used to process poultry litter before inclusion in animal feed?

• What will be the adverse and positive impacts (economic, environmental, health, etc.) resulting from banning poultry litter in ruminant feed?

3. Use of Pet Food In Ruminant Feed

Under the current regulation, pet food for retail sale is exempt from the labeling requirement and need not bear the caution statement ''Do not feed to cattle or other ruminants.'' However, if the pet food products are sold or are intended for sale as distressed or salvage items, then, under § 589.2000(d)(4), such products must state, ''Do not feed to cattle or other ruminants.'' In order to assure that salvaged pet food is not used in ruminant feed despite the requirement that it be labeled with the caution statement, FDA is asking for comments on the following questions.

• Should pet food for retail sale be labeled with the statement ''Do not feed to cattle or other ruminants.''?

• What would be the adverse and positive impacts (economic, environmental, health, etc.) of such a labeling requirement?

4. Preventing Cross-Contamination

The Harvard risk assessment and the FDA public hearing identified cross-contamination of feed and facilities as a possible BSE risk. The current animal feed regulation permits feed and feed ingredients for ruminant animals to be processed in facilities that also process prohibited proteins. The rule requires that those firms handling both prohibited and nonprohibited material have a system in place and a written plan to prevent cross-contamination. We provided suggestions in the preamble to the final rule and in the small entity compliance guides on ways to prevent carry-over in shared equipment. Small entity compliance guides include: No. 67—Renderers; No. 68—Protein Blenders, Feed Manufacturers, and Distributors; No. 69—Feeders of Ruminant Animals With On-Farm Feed Mixing Operations; No. 70—Feeders of Ruminant Animals Without On-Farm Feed Mixing Operations; and No. 76—Questions and Answers, BSE Feed Regulation. You may see the small entity compliance guides on the Center for Veterinary Medicine (CVM) Internet site at *http://www.fda.gov/cvm* or by calling the CVM Communications Staff at 301–594–1755. For feed mills, these suggestions were based on medicated feed good manufacturing practices (GMPs) and included physical cleaning, flushing, or sequencing. For renderers, we suggested flushing, using one complete change of operating volume of the entire system.

The rule requires that those firms handling both prohibited and nonprohibited material have a system in place and a written plan to prevent cross-contamination. The only way to be sure that there is absolutely no potential for carry-over of, or cross-contamination with, prohibited material is to use completely separate facilities. We are interested in information on control measures, other than dedicated facilities, that apply specifically to transmissible spongiform encephalopathy (TSE) agents and in information on whether such measures can prevent carry-over of prohibited material. The agency is asking for comments on the following questions:

• Are there practical ways, other than dedicated facilities, for firms to demonstrate that the level of carry-over could not transmit BSE to cattle or other ruminants? If so, what is the safe level of carry-over in a feed mill; and

• What is the scientific rationale used to establish this safe level?

• What steps are firms currently taking to prevent cross-contamination of prohibited protein into ruminant feed, and what are the costs of those steps?

5. Elimination of the Plate Waste Exemption

The current regulation contains an exemption that permits ''inspected meat products which have been cooked and offered for human food and further heat processed for feed (such as plate waste and used cellulosic food casings)'' to be fed to ruminants. Although the Harvard study concluded that plate waste posed a minimal risk, FDA wishes to reconsider this exemption and is seeking information on the following questions.

• To what extent is plate waste used in ruminant feed?

• What is the composition of plate waste, and what are its sources?

• How is plate waste processed before inclusion in ruminant feed?

• What would be the adverse and positive impacts (economic, environmental, health, etc.) from excluding plate waste from ruminant feed?

III. Comments

You may submit written or electronic comments regarding the advance notice of proposed rulemaking (ANPRM) by February 4, 2003, to the Dockets Management Branch (see **ADDRESSES**). Please submit two copies of any comments, except that individuals may submit one copy. Identify your comments with the docket number found in brackets in the heading of this document. You may see received comments in the Dockets Management Branch reading room between 9 a.m. and 4 p.m., Monday through Friday, except Federal holidays.

You may submit comments electronically on the Internet at: *http://www.fda.gov/dockets/ecomments*. On this Internet site, select ''02N–0273'' and follow the directions.

This ANPRM is issued under sections 201, 402, 409, and 701 of the Federal Food, Drug, and Cosmetic Act (21 U.S.C. 321, 342, 348, and 371) and under the authority of the Commissioner of Food and Drugs.

Dated: November 4, 2002.

Margaret M. Dotzel,

Associate Commissioner for Policy.

[FR Doc. 02–28373 Filed 11–5–02; 8:45 am]

BILLING CODE 4160–01–S

DEPARTMENT OF THE TREASURY

Internal Revenue Service

26 CFR Part 300

[REG–103777–02]

RIN 1545–BA54

User Fees for Processing Offers to Compromise

AGENCY: Internal Revenue Service (IRS), Treasury.

ACTION: Notice of proposed rulemaking and notice of public hearing.

SUMMARY: This document contains proposed amendments to the regulations relating to user fees to provide for the imposition of user fees for the processing of offers to compromise. The charging of user fees implements the Independent Offices Appropriations Act (IOAA). This document also contains a notice of public hearing on these proposed regulations.

DATES: Written and electronic comments must be received by February 4, 2003. Outlines of topics to be discussed at the public hearing scheduled for Thursday, February 13, 2003, must be received by Thursday, January 23, 2003.

ADDRESSES: Send submissions to: CC:ITA:RU (REG–103777–02), room 5226, Internal Revenue Service, POB 7604, Ben Franklin Station, Washington, DC 20044. Submissions may be hand delivered Monday through Friday between the hours of 8 a.m. and 5 p.m. to: CC:ITA:RU (REG–103777–02), Courier's Desk, Internal Revenue Service, 1111 Constitution Avenue NW., Washington, DC. Alternatively, taxpayers may send submissions electronically directly to the IRS Internet site at *www.irs.gov/regs.* The public hearing will be held in Room 4718 of the Internal Revenue Service Building, 1111 Constitution Avenue NW., Washington, DC.

FOR FURTHER INFORMATION CONTACT: Concerning submissions and/or to be placed on the building access list to attend the hearing, Treena Garrett, 202–622–7180; concerning cost methodology, Eva Williams, 202–622–6400; concerning the regulations, G. William Beard, 202–622–3620 (not toll free numbers).

SUPPLEMENTARY INFORMATION:

Offers To Compromise

Section 7122 of the Internal Revenue Code gives the IRS the authority to compromise any civil or criminal case arising under the internal revenue laws, prior to the referral of that case to the Department of Justice. Section 7122 also directs the IRS to prescribe guidelines for officers and employees of the IRS to determine whether an offer to compromise is adequate and should be accepted. Guidelines are contained in § 301.7122–1. Pursuant to § 301.7122–1(b), an offer may be accepted if there is doubt as to liability, if there is doubt as to collectibility, or if acceptance will promote effective tax administration. Pursuant to § 301.7122–1(b)(3), offers may be accepted to promote effective tax administration if either: (1) The IRS determines that, although collection in full could be achieved, collection of the full liability would cause the taxpayer economic hardship within the meaning of § 301.6343–1, or (2) there are no other grounds for compromise and there are compelling public policy or equity considerations.

When an offer to compromise is received, an initial determination is made as to whether the offer is processable. Currently, an offer is returned as nonprocessable if the taxpayer is in bankruptcy, has not filed required tax returns, or has not perfected the offer by properly preparing the offer to compromise form and submitting other required documents. Absent these conditions, the offer is accepted for processing and cannot be rejected without an independent administrative review of the decision to reject and, if the taxpayer chooses to appeal the rejection, independent review by the Office of Appeals. Even though an offer accepted for processing may later be returned to the taxpayer if the taxpayer fails to provide requested information or the IRS determines that the offer was submitted solely to delay collection, such an offer may not be returned before a managerial review of the proposed return is completed pursuant to § 301.7122–1(f)(5)(ii).

When the IRS accepts an offer, the taxpayer receives the benefit of resolving its tax liabilities for a compromised amount, provided the taxpayer complies with the terms of the compromise agreement. To ensure that the taxpayer complies with the terms of the compromise agreement, the IRS must continue to monitor the taxpayer for a period of five years after the compromise is reached.

Even if an offer is rejected, the taxpayer receives the benefit of having the IRS process the offer and make an individualized determination as to the adequacy of the amount offered. In order to make that determination, the IRS must value assets, verify income-earning potential, and compute allowable expenses. The taxpayer also receives the benefit of certain deferred collection activities. The IRS generally does not make any levies to collect liabilities that are the subject of an offer during the period the IRS is evaluating whether the offer will be accepted or rejected, for 30 days immediately following the rejection of an offer, and during any period when a timely appeal from the rejection is being considered by the Office of Appeals.

Establishment of User Fees on Offers To Compromise

The IRS is proposing user fees for the processing of certain offers to compromise tax liabilities pursuant to § 301.7122–1.

For the IRS to process an offer, proposed section 300.3 establishes a $150 fee. The user fee would be paid out of the amount determined to be collectible from the taxpayer and would be taken into account when considering whether the amount offered is acceptable. Thus, imposition of the fee would not change the net amount paid by the taxpayer to compromise the liabilities.

The proposed user fee would not apply to offers based on doubt as to liability, offers made by certain low income taxpayers, offers accepted to promote effective tax administration, and offers accepted based on doubt as to collectibility where there has also been a determination that, although an amount greater than the amount offered could be collected, collection of more than the amount offered would create economic hardship within the meaning of § 301.6343–1 (currently referred to as ''special circumstances'' under IRS procedures). In most of these circumstances, the fees would be waived before being collected from the taxpayer. However, if the fee is collected from the taxpayer, but the offer is accepted to promote effective tax administration or based on considerations of economic hardship, the processing fee either would be refunded to the taxpayer or applied to the amount of the offer.

Offers based on doubt as to liability would be excepted from the user fee based on the inequity of the IRS charging a fee to compromise an uncertain liability when a compromise is based upon a reassessment of the taxpayer's liability for a tax (and the agreed upon amount may, in fact, provide for the full payment of the amount actually owed).

Offers made by low income taxpayers would be excepted from the user fee in light of section 7122(c)(3)(A), which prohibits the IRS from rejecting an offer from a low income taxpayer solely on the basis of the amount offered. Section 7122(c)(3)(A) literally applies to the rejection of an offer rather than the return of an offer for failure to pay a user fee. However, requiring payment of a user fee from a low income taxpayer would undermine section 7122(c)(3)(A) in cases where the taxpayer does not have the ability to pay the fee. Offers from low income taxpayers therefore would be excepted.

Offers accepted to promote effective tax administration would be excepted from the user fee because the collection of a fee in these circumstances would undermine the purposes of these programs. Offers accepted based on doubt as to collectibility and a determination that collecting more than the amount offered would create economic hardship within the meaning of § 301.6343–1 would also be excepted because the criteria for these offers is the same as offers accepted to promote effective tax administration based on economic hardship.

Authority

The IOAA authorizes agencies to prescribe regulations that establish charges for services provided by the agency (user fees). The charges must be fair and be based on the costs to the

Government, the value of the service to the recipient, the public policy or interest served, and other relevant facts. The IOAA provides that regulations implementing user fees are subject to policies prescribed by the President, which are currently set forth in OMB Circular A–25, 58 FR 38142 (July 15, 1993) (the OMB Circular).

The OMB Circular encourages user fees for Government-provided services that confer benefits on identifiable recipients over and above those benefits received by the general public. Under the OMB Circular, an agency that seeks to impose a user fee for Government-provided services must calculate its full cost of providing those services. In general, the amount of a user fee should recover the cost of providing the special service, unless the Office of Management and Budget (OMB) grants an exception. Pursuant to the guidelines in the OMB Circular, the IRS has calculated its cost of providing services under the offer in compromise program. The IRS has determined that the full cost of investigating doubt as to collectibility and effective tax administration offers averages $471 when streamlined procedures are used to investigate the financial condition of the taxpayer, and $3,983 when more detailed investigations are used. The IRS estimates that 70 percent of offers are processed under streamlined procedures. OMB has granted an exception to the ''full cost'' requirement of the OMB Circular.

The Treasury, Postal Service, and General Government Appropriations Act of 1995, Public Law 103–329 (108 Stat. 2382) (the 1995 Appropriations Act) provides that the Secretary may establish new fees for services provided by the IRS where such fees are authorized by another law, such as the IOAA.

The proposed user fees will be implemented under the authority of the IOAA, the OMB Circular, and the 1995 Appropriations Act.

Effective Date

These regulations are proposed to be effective thirty days after the date of publication in the **Federal Register** of the final regulations.

Special Analysis

It has been determined that this notice of proposed rulemaking is not a significant regulatory action as defined in Executive Order 12866. Therefore, a regulatory assessment is not required. It is hereby certified that these regulations will not have a significant economic impact on a substantial number of small entities. Accordingly, a regulatory flexibility analysis is not required. This certification is based on the information that follows. The economic impact of these regulations on any small entity would result from the entity being required to pay a fee prescribed by these regulations in order to obtain a particular service. The dollar amount of the fee is not, however, substantial enough to have a significant economic impact on any entity subject to the fee. Pursuant to section 7805(f) of the Internal Revenue Code, this notice of proposed rulemaking will be submitted to the Chief Counsel for Advocacy of the Small Business Administration for comment on its impact on small business.

Comments and Public Hearing

Before these proposed regulations are adopted as final regulations, consideration will be given to any written (a signed original and eight (8) copies) or electronic comments that are submitted timely to the IRS. The IRS and Treasury Department request comments on the clarity of the proposed regulations and how they may be made easier to understand. All comments will be available for public inspection and copying.

A public hearing has been scheduled for Thursday, February 13, 2003, at 10 a.m. in room 4718, Internal Revenue Building, 1111 Constitution Avenue NW., Washington, DC. Due to building security procedures, visitors must enter at the Constitution Avenue entrance. In addition, all visitors must present photo identification to enter the building. Because of access restrictions, visitors will not be admitted beyond the immediate entrance area more than 30 minutes before the hearing starts. For information about having your name placed on the building access list to attend the hearing, see the **FOR FURTHER INFORMATION CONTACT** section of this preamble.

The rules of 26 CFR 601.601(a)(3) apply to the hearing. Persons who wish to present oral comments at the hearing must submit electronic or written comments and an outline of the comments to be discussed and the time to be devoted to each topic (signed original and eight (8) copies) by Thursday, January 23, 2003. A period of 10 minutes will be allotted to each person for making comments. An agenda showing the scheduling of the speakers will be prepared after the deadline for receiving outlines has passed. Copies of the agenda will be available free of charge at the hearing.

Drafting Information

The principal author of these regulations is G. William Beard, Office of Associate Chief Counsel (Procedure and Administration), Collection, Bankruptcy and Summonses Division.

List of Subjects in 26 CFR Part 300

Estate taxes, Excise taxes, Gift taxes, Income taxes, Reporting and recordkeeping requirements, User fees.

Proposed Amendments to the Regulations

Accordingly, 26 CFR part 300 is proposed to be amended as follows:

PART 300—USER FEES

1. The authority citation for part 300 continues to read as follows:

Authority: 31 U.S.C. 9701.

2. Section 300.0 is amended as follows:

1. Paragraph (b)(3) is added.
2. Paragraph (c) is revised.

The addition and revision read as follows:

§ 300.0 User fees, in general.

* * * * *

(b) * * *

(3) Processing an offer to compromise.

(c) *Effective Date.* This part 300 is applicable March 16, 1995, except that the user fee for processing offers to compromise is applicable thirty days after the date of publication in the **Federal Register** of the final regulations.

3. Section 300.3 is added to read as follows:

§ 300.3 Offer to compromise fee.

(a) *Applicability.* This section applies to the processing of offers to compromise tax liabilities pursuant to § 301.7122–1 of this chapter. Except as provided in this section, this fee applies to all offers to compromise accepted for processing.

(b) *Fee.* (1) The fee for processing an offer to compromise is $150.00, except that no fee will be charged if an offer is—

(i) Based on doubt as to liability as defined in § 301.7122–1(b)(1) of this chapter; or

(ii) Made by a low income taxpayer, that is, a taxpayer who falls at or below the dollar criteria established by the poverty guidelines updated annually in the **Federal Register** by the U.S. Department of Health and Human Services under authority of section 673(2) of the Omnibus Budget Reconciliation Act of 1981 (95 Stat. 357, 511) or such other measure that is adopted by the Secretary.

(2) The fee will, in the taxpayer's discretion, either be refunded to the

taxpayer or applied against the amount of the offer if the offer is—

(i) Accepted to promote effective tax administration pursuant to § 301.7122–1(b)(3) of this chapter; or

(ii) Accepted based on doubt as to collectibility and a determination that collection of an amount greater than the amount offered would create economic hardship within the meaning of § 301.6343–1 of this chapter.

(3) Except as otherwise provided in this paragraph (b), the fee will not be refunded to the taxpayer if the offer is accepted, rejected, withdrawn, or returned as nonprocessable after acceptance for processing.

(c) *Person liable for the fee.* The person liable for the processing fee is the taxpayer whose tax liabilities are the subject of the offer.

Robert E. Wenzel,

Deputy Commissioner of Internal Revenue.

[FR Doc. 02–28249 Filed 11–5–02; 8:45 am]

BILLING CODE 4830–01–P

DEPARTMENT OF THE INTERIOR

Office of Surface Mining Reclamation and Enforcement

30 CFR Part 948

[WV–092–FOR]

West Virginia Regulatory Program

AGENCY: Office of Surface Mining Reclamation and Enforcement (OSM), Interior.

ACTION: Proposed rule; reopening of public comment period.

SUMMARY:

We are reopening the public comment period on an amendment to the West Virginia surface mining regulatory program (the West Virginia program) under the Surface Mining Control and Reclamation Act of 1977 (SMCRA or the Act). The program amendment consists of changes to the Code of West Virginia (W. Va. Code) as contained in Senate Bill 603. We are reopening the comment period to provide an opportunity to review and comment on additional amendments to the W. Va. Code and the Code of State Regulations (CSR) provided by the State under Senate Bill 698. The amendments concern the Office of Coalfield Community Development, and relate to the West Virginia program.

This document gives the times and locations that the West Virginia program and the proposed amendment to that program are available for your inspection, the comment period during which you may submit written comments on the amendment, and the procedures that we will follow for the public hearing, if one is requested.

DATES: We will accept written comments on this amendment until 4 p.m. (local time), December 6, 2002. If requested, we will hold a public hearing on the amendment on December 2, 2002. We will accept requests to speak at a hearing until 4:00 p.m. (local time), on November 21, 2002.

ADDRESSES: You should mail or hand deliver written comments and requests to speak at the hearing to Mr. Roger W. Calhoun at the address listed below.

You may review copies of the West Virginia program, this amendment, the previous amendment, a listing of any scheduled public hearings, and all written comments received in response to this document at the addresses listed below during normal business hours, Monday through Friday, excluding holidays. You may receive one free copy of the amendment by contacting OSM's Charleston Field Office.

Mr. Roger W. Calhoun, Director, Charleston Field Office, Office of Surface Mining Reclamation and Enforcement, 1027 Virginia Street, East, Charleston, West Virginia 25301, Telephone: (304) 347–7158. E-mail: *chfo@osmre.gov.*

West Virginia Department of Environmental Protection, 10 McJunkin Road, Nitro, West Virginia 25143, Telephone: (304) 759–0510. The proposed amendment will be posted at the West Virginia Department of Environmental Protection's Internet home page: *http://www.dep.state.wv.us.*

In addition, you may review copies of the proposed amendment during regular business hours at the following locations:

Office of Surface Mining Reclamation and Enforcement, Morgantown Area Office, 75 High Street, Room 229, P.O. Box 886, Morgantown, West Virginia 26507, Telephone: (304) 291–4004 (By appointment only).

Office of Surface Mining Reclamation and Enforcement, Beckley Area Office, 313 Harper Park Drive, Beckley, West Virginia 25801, Telephone: (304) 255–5265.

FOR FURTHER INFORMATION CONTACT: Mr. Roger W. Calhoun, Director, Charleston Field Office; Telephone: (304) 347–7158. Internet address: *chfo@osmre.gov.*

SUPPLEMENTARY INFORMATION:

I. Background on the West Virginia Program
II. Description of the Proposed Amendment
III. Public Comment Procedures
IV. Procedural Determinations

I. Background on the West Virginia Program

Section 503(a) of the Act permits a State to assume primacy for the regulation of surface coal mining and reclamation operations on non-Federal and non-Indian lands within its borders by demonstrating that its State program includes, among other things, ''a State law which provides for the regulation of surface coal mining and reclamation operations in accordance with the requirements of the Act***; and rules and regulations consistent with regulations issued by the Secretary pursuant to the Act.'' *See* 30 U.S.C. 1253(a)(1) and (7). On the basis of these criteria, the Secretary of the Interior conditionally approved the West Virginia program on January 21, 1981. You can find background information on the West Virginia program, including the Secretary's findings, the disposition of comments, and conditions of approval of the West Virginia program in the January 21, 1981 **Federal Register** (46 FR 5915). You can also find later actions concerning West Virginia's program and program amendments at 30 CFR 948.10, 948.12, 948.13, 948.15, and 948.16.

II. Description of the Proposed Amendment

By letter dated May 21, 2001 (Administrative Record Number WV–1217), the West Virginia Department of Environmental Protection (WVDEP) sent us a proposed amendment to its program under SMCRA (30 U.S.C. 1201 *et seq.*). The proposed amendment consists of changes to the W. Va. Code at chapters 22–3 (West Virginia Surface Coal Mining and Reclamation Act) and 5B–2A (Office of Coalfield Community Development) as contained in Senate Bill 603.

We announced the receipt and provided an opportunity to comment on the amendment in the June 20, 2001, **Federal Register** (66 FR 33032) (Administrative Record Number WV–1219).

By letter and electronic mail dated August 12, 2002, WVDEP sent us additional amendments that relate to its program as contained in Senate Bill 698 (Administrative Record Numbers WV–1325 and WV–1326). The amendment consists of changes to W. Va. Code 5B–2A and implementing regulations at CSR 145–8. Enrolled Senate Bill 698 was signed by the Governor on March 21, 2002.

The State's provisions at W. Va. Code 5B–2A and CSR 145–8 have not been previously approved by OSM. The proposed rules at CSR 145–8 implement

and help clarify the statutory provisions at W. Va. Code 5B–2A. There are many cross-references in these provisions to the State's surface mining program at W. Va. Code 22–3. In general, the State's provisions at W. Va. Code 5B–2A and CSR 145–8 appear to be outside the scope of the State's surface coal mining regulatory program, and, as such, may not require our approval before the State can implement them. However, due to the many cross-references to the State's surface mining program in these provisions, the proposed provisions may modify the approved program in some ways. Therefore, we are asking for public comment on whether or not the proposed provisions submitted on August 12, 2002, and the earlier revisions submitted on May 21, 2001, modify the approved West Virginia program in any way, and whether or not such modifications render the West Virginia program less stringent than SMCRA or less effective than the Federal regulations.

The new statutory amendments are summarized below.

1. W. Va. Code 5B–2A. Office of Coalfield Community Development

In general, State Senate Bill 698 deletes W. Va. Code section 5B–2A–7, which required the Office of Coalfield Community Development (Office) to develop coalfield community development statements, and deletes references to such impact statements in sections 5B–2A–5, 8, 9 and 12. W. Va. Code is also amended by adding a subsection (b), which authorizes the promulgation of emergency rules at CSR 145–8 to incorporate the revisions to W. Va. Code 5B–2A.

5B–2A–7. Coalfield Community Development Statement

Coalfield community development statement provisions are deleted in their entirety. This section required that the Office of Coalfield Community Development coordinate the development of a coalfield community development statement that, among other requirements, shall include an evaluation of the future of the community once mining operations are completed.

5B–2A–5. Powers and Duties

Paragraph 5B–2A–5(2), which authorized the office to establish a procedure for developing and implementing coalfield community development statements, is deleted.

5B–2A–8. Determining and Developing Needed Community Assets

Paragraph 5B–2A–8(a) is amended by deleting language that refers to the coalfield community development statement that was required by the deleted section 5B–2A–7. As amended, subsection 5B–2A–8(a) provides as follows:

> The office shall determine the community assets that may be developed by the community, county or region to foster its viability when surface mining operations are completed.

Subsection 5B–2A–8(c) is amended by deleting a phrase that includes reference to the coalfield community development statement that was required by deleted section 5B–2A–7. As amended, subsection 5B–2A–8(c) provides that ''The operator shall be required to prepare and submit to the office the information set forth in this subsection as follows.''

Paragraph 5B–2A–8(d)(4), which referred to the determinations made during the development of the coalfield community development statement that was required by deleted section 5B–2A–7, is deleted.

5B–2A–9. Securing Developable Land and Infrastructure

Subsection 5B–2A–9(a) is amended by deleting language that referred to the community development statement that was required by deleted section 5B–2A–7. As amended, subsection 5B–2A–9(a) provides as follows:

> (a) The office shall determine the land and infrastructure needs in the general area of the surface mining operations.

Subsection 5B–2A–9(c) is amended by deleting a reference to the coalfield community development statement that was required by deleted section 5B–2A–7. As amended, 5B–2A–9(c) provides as follows:

> (c) To assist the office the operator shall be required to prepare and submit to the office the information set forth in this subsection as follows:

Subsection 5B–2A–9(f) is amended by deleting a reference to the coalfield community development statement that was required by deleted section 5B–2A–7. As amended, 5B–2A–9(f) provides as follows:

> The office may secure developable land and infrastructure for a development office or county through the preparation of a master land use plan for inclusion into a reclamation plan prepared pursuant to the provisions of section ten, article three, chapter twenty-two of this code. No provision of this section may be construed to modify requirements of article three of said chapter. Participation in a master land use plan is voluntary.

5B–2A–12. Rulemaking

Paragraph 5B–2A–12(a)(2), which referred to the coalfield community development statement required by deleted section 5B–2A–7, is deleted.

Subsection 5B–2A–12(b) is new. This provision provides as follows:

> The office is authorized to promulgate emergency rules, prior to the first day of July, two thousand two, to incorporate the revisions to this article enacted during the two thousand two regular legislative session.

The new regulatory revisions are summarized below.

2. CSR 145–8. Community Development Assessment and Real Property Valuation Procedures for Office of Coalfield Community Development

145–8–1. General

145–8–1.1. concerning Scope, is amended by deleting reference to coalfield community development statements and adding language concerning master land use plans. As amended, 145–8–1.1. provides as follows:

> 1.1. Scope. This rule establishes the procedure for the creation of community impact statements by operators, the process to develop coalfield community development procedures which include asset development goals and infrastructure needs, the criteria for the development of a master land use plan by local, county regional development or redevelopment authorities, and the procedure for establishing the value of property to assist property owners who desire to voluntarily sell their property to an operator.

145–8–2. Definitions

145–8–2.1. definition of ''Director'' means the director of the office. This definition formerly defined ''Chief.''

145–8–2.3. definition of ''Community Development Statement'' is amended by deleting the term ''statement'' from the title of this definition and replacing that word with the word ''Procedures.'' The definition is amended by deleting language related to the ''statement'' and adding language to read as follows:

> 2.3. Community Development Procedures—shall mean that the Office of Coalfield Community Development will incorporate and transfer community impact statement data with county governments and or economic development authorities as outlined by Section 5 of this rule.

145–8–2.5. definition of ''Division.'' This definition is amended by deleting the word ''division'' in two places and replacing those words with the term ''department.''

145–8–2.6. definition of ''Development Authority.'' This definition is new and provides that

''Development Authority shall mean the appropriate state, local, county or regional development or redevelopment authority.''

145–8–2.8. definition of ''Infrastructure Component Standards.'' This definition is new and provides as follows:

2.8. Infrastructure Component Standards—shall mean those standards developed by a development authority which are to be applied to the infrastructure needs as determined by the development authority and as included in a master land use plan to ensure proper implementation of the plan. The standards shall be specific to each plan.

145–8–2.11. definition of ''Master Land Use Plan.'' This definition is new and provides as follows:

2.11. Master Land Use Plan—shall mean a plan which addresses current and prospective uses for land which in whole or in part is or has been covered by a surface mining permit and which contains all the information required by section 6 of this rule.

145–8–2.12. definition of ''Permit.'' This definition has been amended by adding a reference to W. Va. Code 22–3–8. As amended, ''permit'' means a permit to conduct surface mining operations issued pursuant to W. Va. Code 22–3–8.

145–8–2.13. definition of ''Plan.'' This new definition provides that ''plan'' means ''a master land use plan as defined in subsection 2.11 of this rule.''

145–8–2.14. definition of ''Reclamation Plan.'' This new definition provides that ''reclamation plan'' means ''the reclamation plan established in W. Va. Code 22–3–10.''

145–8–4. Community Impact Statement

145–8–4.2. has been amended by clarifying existing language and adding new language concerning when a community impact statement shall be filed. As amended, this provision is as follows:

4.2. For permits granted after June 11, 1999, a community impact statement shall also be filed by the operator within 90 days after the permit application is deemed by the department to be administratively complete, and within 90 days after the first five year incremental renewal date for all permits issued prior to June 11, 1999.

145–8–5. Coalfield Community Development Procedures

The title of this section is amended by deleting the word ''Statement'' and adding, in its place, the word ''Procedures.''

145–8–5.1. is amended by deleting a reference to a coalfield community development statement and adding language concerning a community impact statement. As amended, this provision is as follows:

The office shall coordinate and share information outlined in the community impact statement with the county development authority when an operator applies for any permit with the department.

145–8–5.1.a. is deleted and concerned the development of a coalfield community development statement when multiple permit applications are applied for in a county or contiguous area of an adjacent county.

145–8–5.1.b. is deleted and concerned dividing a coalfield community development statement into smaller areas if it was impracticable to make a countywide statement.

145–8–5.2. is amended by deleting language concerning a coalfield community development statement and adding language requiring an operator to provide notice of its intent to mine. As amended this provision is as follows:

5.2. Within 30 days after the community impact statement from the operator applying for the permit is filed with the office, the operator shall distribute notice that property is intended to be mined by the operator applying for the permit.

145–8–5.2.a. is deleted and concerned providing notice to owners of interest in the property intended to be mined.

145–8–5.3.a. is amended by deleting a reference to the coalfield community development statement and adding the phrase ''of the proposed mining activity.'' As amended, this provision is as follows:

5.3. Within 30 days after the community impact statement from the operator applying for the permit is filed with the office, the operator shall notify individuals and business owners and operators in the affected communities of the proposed mining activity.

145–8–5.4. is amended by deleting reference to the Office of Coalfield Community Development and the coalfield community development statement. As amended, this provision is as follows:

5.4. A notice provided by the operator to affected persons and entities about coalfield community development shall contain the following information:

145–8–5.4.d. is amended by deleting language concerning preparing an initial community development statement or modifying an existing statement by the Office of Coalfield Community Development. As amended, the provision is as follows:

5.4.d. The notice shall inform its recipients that the office invites persons and entities in areas affected by the anticipated surface mining operations to submit written comments and other documentation to the chief [director] within 30 days after the date of the notice about how their communities are anticipated to be affected by the planned surface mining operations and the intended postmining land use; and

145–8–5.4.e. is amended by deleting language concerning a draft or modified community development statement and language concerning the issuance of the draft or modified community development statement. As amended, this provision is as follows:

5.4.e. The notice shall inform its recipients that the community impact statements for the planned surface mining operations were filed within 180 days from the date of the notice, and that persons and entities in the affected communities shall have 30 days after the date to submit written comments to the director.

145–8–5.5. is amended by deleting language concerning a public meeting concerning the draft or modified community development statement. In addition, language is added that requires the office to deliver public comments to the development authority and assist in incorporating the community impact statement into the land use master plan. As amended, this provision is as follows:

5.5. After the close of the public comment period, the office will deliver public comments to the development authority and assist in the incorporating of the community impact statement into the land use master plan.

145–8–5.6. is amended by deleting a requirement that the Office of Coalfield Community Development shall determine what shall be contained in the coalfield community development statement. Language is added that requires the office to coordinate and transfer information to development authorities in the affected county. As amended, the provision is as follows:

5.6. The office shall coordinate and transfer information, findings and recommendations to development authorities in the county affected.

145–8–5.6.c.4. is amended by deleting the word ''statement'' and adding in its place the word ''procedures.''

145–8–5.6.d. is amended by deleting the word ''statement'' and adding in its place the word ''procedures.'' In addition, the word ''determine'' is deleted and replaced by the word ''recommended.'' As amended this provision is as follows:

5.6.d. As part of the coalfield community development procedures, the office shall recommend the land and infrastructure needs in the county or counties in which the surface mining operations are being conducted, or any adjacent county.

145–8–5.7. is deleted, and required that the community development statement be completed within 180 days

following the public meeting or issuance of a surface mining permit.

145–8–5.8. is renumbered as 5.7. and amended by deleting references to the community development statement.

145–8–5.9. is deleted and concerned the requirement that the office prepare an action report as part of the coalfield community development statement.

145.8.6. Master Land Use Plans

This section is new and provides as follows:

6.1. A master land use plan may be prepared by a development authority. If requested by a development authority, the office may assist in the preparation of a master land use plan.

6.2. A development authority must determine land and infrastructure needs within its jurisdiction as necessary in conjunction with its preparation of a master land use plan.

6.2.a. In making a determination of the land and infrastructure needs in its jurisdiction, the development authority shall evaluate at least the considerations set forth in subsection 5.6.e. of this rule. A development authority may satisfy this requirement by incorporating all or part of the determination of land and infrastructure needs of an area reflected in a community development statement [procedures] prepared in accordance with section 5 of this rule.

6.3. For any infrastructure needs identified by the development authority, consistent with the current and prospective uses described in the master land use plan, infrastructure component standards shall also be developed.

6.3.a. The infrastructure component standards developed by a development authority shall be approved by the appropriate county commission or commissions before such standards can be included in a master land use plan.

6.3.b. Before approving the infrastructure component standards, the county commission or commissions shall give notice to the public and provide a 30-day comment period.

6.4. Once a master land use plan has been prepared, the office shall review the plan. This review shall include an evaluation of the plan's impact on the development of economic and community assets and conformance with this rule.

6.5. A master land use plan shall be sufficiently complete to indicate its relationship to definite objectives of the development authority as to appropriate land uses and shall include at least the following:

6.5.a. The boundary of the area encompassed by the plan with a map showing the existing uses and conditions of the real property and any infrastructure components therein;

6.5.b. A land use plan showing the proposed uses of the area;

6.5.c. A statement of the proposed changes, if any, in zoning ordinances or maps, street and highway layouts, building codes and ordinances;

6.5.d. A site plan of the area;

6.5.e. A statement as to the kinds and number of additional public facilities or utilities which will be required to support the new land uses in the area after development;

6.5.f. A statement of the land and infrastructure needs as determined pursuant to subsection 6.2 of this rule which shall include a statement of infrastructure component standards; and

6.5.g. Any community impact statements and/or community development statements which may have been prepared and which e[a]ffect any property within the boundaries of the master land use plan.

6.6. An operator may include, in a surface mining permit application, a master land use plan which addresses postmining land uses in the reclamation plan developed pursuant to W. Va. Code 22–3–10. An operator may amend a reclamation plan approved but not implemented or a reclamation plan pending approval by including a master land use plan.

6.6.a. Any modifications in the postmining land use during mining must be made in accordance with 38 CFR 2–7.3.a. and 3.28.

6.7. The master land use plan must be approved by the department as part of the operator's reclamation plan before the master land use plan may be implemented.

III. Public Comment Procedures

Under the provisions of 30 CFR 732.17(h), we are seeking your comments on whether the amendment satisfies the applicable program approval criteria of 30 CFR 732.15. If we approve the amendment, it will become part of the State program.

Written Comments

Send your written or electric comments to OSM at the address given above. Your written comments should be specific, pertain only to the issues proposed in this rulemaking, and include explanations in support of your recommendations. We will not consider or respond to your comments when developing the final rule if they are received after the close of the comment period (*see* **DATES**). We will make every attempt to log all comments into the administrative record, but comments delivered to an address other than the Charleston Field Office may not be logged in.

Electronic Comments

Please submit Internet comments as an ASCII or Word file avoiding the use of special characters and any form of encryption. Please also include ''Attn: SPATS No. WV–092–FOR'' and your name and return address in your Internet message. If you do not receive a confirmation that we have received your Internet message, contact the Charleston Field Office at (304) 347–7158.

Availability of Comments

We will make comments, including names and addresses of respondents, available for public review during normal business hours. We will not consider anonymous comments. If individual respondents request confidentiality, we will honor their request to the extent allowable by law. Individual respondents who wish to withhold their name or address from public review, except for the city or town, must state this prominently at the beginning of their comments. We will make all submissions from organizations or businesses, and from individuals identifying themselves as representatives or officials of organizations or businesses, available for public review in their entirety.

Public Hearing

If you wish to speak at the public hearing, contact the person listed under **FOR FURTHER INFORMATION CONTACT** by 4 p.m. (local time), on December 6, 2002. If you are disabled and need special accommodations to attend a public hearing, contact the person listed under **FOR FURTHER INFORMATION CONTACT.** We will arrange the location and time of the hearing with those persons requesting the hearing. If no one requests an opportunity to speak, we will not hold a hearing.

To assist the transcriber and ensure an accurate record, we request, if possible, that each person who speaks at the public hearing provide us with a written copy of his or her comments. The public hearing will continue on the specified date until everyone scheduled to speak has been given an opportunity to be heard. If you are in the audience and have not been scheduled to speak and wish to do so, you will be allowed to speak after those who have been scheduled. We will end the hearing after everyone scheduled to speak and others present in the audience who wish to speak, have been heard.

Public Meeting

If only one person requests an opportunity to speak, we may hold a public meeting rather than a public hearing. If you wish to meet with us to discuss the amendment, please request a meeting by contacting the person listed under **FOR FURTHER INFORMATION CONTACT.** All such meetings are open to the public and, if possible, we will post notices of meetings at the locations listed under **ADDRESSES.**'' We will make a written summary of each meeting a part of the administrative record.

IV. Procedural Determinations

Executive Order 12630—Takings

This rule does not have takings implications. This determination is based on the analysis performed for the counterpart Federal regulation.

Executive Order 12866—Regulatory Planning and Review

This rule is exempted from review by the Office of Management and Budget under Executive Order 12866.

Executive Order 12988—Civil Justice Reform

The Department of the Interior has conducted the reviews required by section 3 of Executive Order 12988 and has determined that this rule meets the applicable standards of subsections (a) and (b) of that section. However, these standards are not applicable to the actual language of State regulatory programs and program amendments because each program is drafted and promulgated by a specific State, not by OSM. Under sections 503 and 505 of SMCRA (30 U.S.C. 1253 and 1255) and the Federal regulations at 30 CFR 730.11, 732.15, and 732.17(h)(10), decisions on proposed State regulatory programs and program amendments submitted by the States must be based solely on a determination of whether the submittal is consistent with SMCRA and its implementing Federal regulations and whether the other requirements of 30 CFR Parts 730, 731, and 732 have been met.

Executive Order 13132—Federalism

This rule does not have Federalism implications. SMCRA delineates the roles of the Federal and State governments with regard to the regulation of surface coal mining and reclamation operations. One of the purposes of SMCRA is to ''establish a nationwide program to protect society and the environment from the adverse effects of surface coal mining operations.'' Section 503(a)(1) of SMCRA requires that State laws regulating surface coal mining and reclamation operations be ''in accordance with'' the requirements of SMCRA, and section 503(a)(7) requires that State programs contain rules and regulations ''consistent with'' regulations issued by the Secretary pursuant to SMCRA.

Executive Order 13211—Regulations That Significantly Affect The Supply, Distribution, Or Use Of Energy

On May 18, 2001, the President issued Executive Order 13211 which requires agencies to prepare a Statement of Energy Effects for a rule that is (1) considered significant under Executive Order 12866, and (2) likely to have a significant adverse effect on the supply, distribution, or use of energy. Because this rule is exempt from review under Executive Order 12866 and is not expected to have a significant adverse effect on the supply, distribution, or use of energy, a Statement of Energy Effects is not required.

National Environmental Policy Act

This rule does not require an environmental impact statement because section 702(d) of SMCRA (30 U.S.C. 1292(d)) provides that agency decisions on proposed State regulatory program provisions do not constitute major Federal actions within the meaning of section 102(2)(C) of the National Environmental Policy Act (42 U.S.C. 4332(2)(C)).

Paperwork Reduction Act

This rule does not contain information collection requirements that require approval by OMB under the Paperwork Reduction Act (44 U.S.C. 3507 *et seq.*).

Regulatory Flexibility Act

The Department of the Interior certifies that this rule will not have a significant economic impact on a substantial number of small entities under the Regulatory Flexibility Act (5 U.S.C. 601 *et seq.*). The State submittal, which is the subject of this rule, is based upon counterpart Federal regulations for which an economic analysis was prepared and certification made that such regulations would not have a significant economic effect upon a substantial number of small entities. In making the determination as to whether this rule would have a significant economic impact, the Department relied upon the data and assumptions for the counterpart Federal regulations.

Small Business Regulatory Enforcement Fairness Act

This rule is not a major rule under 5 U.S.C. 804(2), the Small Business Regulatory Enforcement Fairness Act. This rule: (a) Does not have an annual effect on the economy of $100 million; (b) Will not cause a major increase in costs or prices for consumers, individual industries, Federal, State, or local government agencies, or geographic regions; and (c) Does not have significant adverse effects on competition, employment, investment, productivity, innovation, or the ability of U.S.-based enterprises to compete with foreign-based enterprises. This determination is based upon the fact that the State submittal, which is the subject of this rule, is based upon counterpart Federal regulations for which an analysis was prepared and a determination made that the Federal regulation was not considered a major rule.

Unfunded Mandates

This rule will not impose an unfunded mandate on State, local, or tribal governments or the private sector of $100 million or more in any given year. This determination is based upon the fact that the State submittal, which is the subject of this rule, is based upon counterpart Federal regulations for which an analysis was prepared and a determination made that the Federal regulation did not impose an unfunded mandate.

List of Subjects in 30 CFR Part 948

Intergovernmental relations, Surface mining, Underground mining.

Dated: September 13, 2002.

Vann Weaver,

Acting Regional Director, Appalachian Regional Coordinating Center.

[FR Doc. 02–28202 Filed 11–5–02; 8:45 am]

BILLING CODE 4310–05–P

ENVIRONMENTAL PROTECTION AGENCY

40 CFR Part 52

[IA 159–1159; FRL–7403–6]

Approval and Promulgation of Implementation Plans; State of Iowa

AGENCY: Environmental Protection Agency (EPA).

ACTION: Proposed rule.

SUMMARY: EPA proposes to approve the State Implementation Plan (SIP) revision submitted by the state of Iowa. This revision pertains to orders and permits issued by the state to control particulate matter (PM_{10}) emissions from Holnam, Inc., and Lehigh Portland Cement Company, at Mason City (Cerro Gordo County), Iowa.

In the final rules section of the **Federal Register**, EPA is approving the state's SIP revision as a direct final rule without prior proposal because the Agency views this as a noncontroversial revision amendment and anticipates no relevant adverse comments to this action. A detailed rationale for the approval is set forth in the direct final rule. If no relevant adverse comments are received in response to this action, no further activity is contemplated in relation to this action. If EPA receives

relevant adverse comments, the direct final rule will be withdrawn and all public comments received will be addressed in a subsequent final rule based on this proposed action. EPA will not institute a second comment period on this action. Any parties interested in commenting on this action should do so at this time. Please note that if EPA receives adverse comment on part of this rule and if that part can be severed from the remainder of the rule, EPA may adopt as final those parts of the rule that are not the subject of an adverse comment.

DATES: Comments on this proposed action must be received in writing by December 6, 2002.

ADDRESSES: Comments may be mailed to Royan Teter, Environmental Protection Agency, Air Planning and Development Branch, 901 North 5th Street, Kansas City, Kansas 66101.

FOR FURTHER INFORMATION CONTACT: Royan Teter at (913) 551–7609.

SUPPLEMENTARY INFORMATION: See the information provided in the direct final rule which is located in the rules section of the **Federal Register**.

Dated: October 23, 2002.

William W. Rice,

Acting Regional Administrator, Region 7.

[FR Doc. 02–27839 Filed 11–5–02; 8:45 am]

BILLING CODE 6560–50–P

ENVIRONMENTAL PROTECTION AGENCY

40 CFR Part 82

[FRL–7407–8]

RIN 2060–AK48

Protection of Stratospheric Ozone: Allocation of Essential Use Allowances for Calendar Year 2003

AGENCY: Environmental Protection Agency (EPA).

ACTION: Notice of proposed rulemaking.

SUMMARY: With this action, EPA is proposing to allocate essential-use allowances for import and production of class I stratospheric ozone depleting substances (ODSs) for calendar year 2003. Essential use allowances permit a person to obtain controlled ODSs as an exemption to the January 1, 1996 regulatory phase-out of production and import of these chemicals. EPA allocates essential-use allowances for exempted production or import of a specific quantity of class I ODS solely for the designated essential purpose. EPA is proposing to allocate essential-use allowances for production and import of ODSs for use in medical devices and the Space Shuttle and Titan Rockets.

DATES: Written comments on this proposed rule must be received on or before December 6, 2002, unles a public hearing is requested. Comments must then be received on or before 30 days following the public hearing. Any party requesting a public hearing must notify the contact listed below by 5 p.m. Eastern Standard Time on November 16, 2002. If a hearing is held, EPA will publish a document in the **Federal Register** announcing the hearing information.

ADDRESSES: Comments on this rulemaking should be submitted in duplicate to: Erin Birgfeld, Essential Use Program Manager, Global Programs Division, U.S. Environmental Protection Agency (6205J), 1200 Pennsylvania Avenue, NW., Washington, DC 20460. If you send comments using courier services or overnight express, please address comments to 501 3rd Street NW., Washington, DC 20001. Comments will be filed in EPA Air docket number A–93–39. Comments that contain confidential business information should be submitted in two versions, one clearly marked ''Public'', to be filed in the public docket, and the other clearly marked ''Confidential'' to be reviewed by authorized government personnel only. If the comments are not marked, EPA will assume they are public and contain no confidential information.

Materials relevant to this rulemaking are contained in Docket No. A–93–39. The Docket is located at 1301 Constitution Avenue, NW., Room B108; *Mail Code:* 6102T Washington, DC 20460. The materials may be inspected from 8 a.m. until 5:30 p.m. Monday through Friday. EPA may charge a reasonable fee for copying docket materials.

FOR FURTHER INFORMATION CONTACT: Erin Birgfeld, U.S. Environmental Protection Agency, Global Programs Division, Office of Atmospheric Programs, 6205J, 1200 Pennsylvania Avenue, Washington, DC, 20460; (202) 564–9079; *birgfeld.erin@epa.gov.*

SUPPLEMENTARY INFORMATION:

Table of Contents

I. Background
II. Essential Use Allowances for Medical Devices
A. How were essential-use allowances for medical devices nominated and approved by the Parties to the Montreal Protocol?
B. How does the Clean Air Act authorize essential-use allowances?
C. What was the allocation process for essential-use allowances for medical devices?
D. How were the decisions on the amounts of essential-use allowances for each company made?
E. Will the amounts actually allocated in the final rule be the same as the amounts listed in this proposed rule?
III. Exemption for methyl chloroform for use in the Space Shuttle and Titan Rockets
IV. Allocation of essential-use allowances for medical devices and the Space Shuttle and Titan Rockets for calendar year 2003
V. Administrative requirements
A. Unfunded Mandates Reform Act
B. Executive Order 12866
C. Paperwork Reduction Act (PRA)
D. Executive Order 13175 (Consultation and Coordination with Indian Tribal Governments)
E. Regulatory Flexibility Act (RFA) as amended by the Small Business Regulatory Enforcement Fairness Act of 1996 (SBREFA), 5 U.S.C. 601 *et. seq.*
F. Applicability of Executive Order 13045: Protection of Children from Environmental Health Risks and Safety Risks
G. National Technology Transfer and Advancement Act
H. Executive Order 13132 (Federalism)
I. Executive Order 13211 (Energy Effects)

I. Background

The Montreal Protocol on Substances that Deplete the Ozone Layer (Protocol) is the international agreement to reduce and eventually eliminate production and consumption [1] of all stratospheric ozone depleting substances (ODSs). The elimination of production and consumption is accomplished through adherence to phase-out schedules for production and consumption of specific class I ODSs including chlorofluorocarbons (CFCs), halons, carbon tetrachloride, methyl chloroform, hydrochlorofluorocarbons, and methyl bromide. As of January 1996, production and import of class I ODSs [2] were phased out in all developed countries including the United States. However, the Protocol and the Clean Air Act (CAA or Act) provide exemptions which allow for the continued import and/or production of class I ODS for specific uses. Under the Montreal Protocol, exemptions are granted for uses that are determined by the Parties to be ''essential.'' Decision IV/25, taken by the Parties in 1992, established criteria for determining

[1] ''Consumption'' is defined as the amount of a substance produced in the United States, plus the amount imported, minus the amount exported to Parties to the Montreal Protocol (*see* Section 601(6) of the Clean Air Act). Stockpiles of class I ODSs produced or imported prior to the 1996 phaseout can continue to be used for purposes not expressly banned at 40 CFR part 82.

[2] Class I ozone depleting substances are defined at 40 CFR Part 82, subpart A, appendix A.

whether a specific use should be approved as essential, and set forth the international process for making determinations of essentiality. The criteria for an essential-use as set forth in paragraph 1 of Decision IV/25 are the following:

'' (a) That a use of a controlled substance should qualify as ''essential'' only if:

(i) it is necessary for the health, safety or is critical for the functioning of society (encompassing cultural and intellectual aspects); and

(ii) there are no available technically and economically feasible alternatives or substitutes that are acceptable from the standpoint of environment and health;

(b) that production and consumption, if any, of a controlled substance for essential-uses should be permitted only if:

(i) all economically feasible steps have been taken to minimize the essential-use and any associated emission of the controlled substance; and

(ii) the controlled substance is not available in sufficient quantity and quality from existing stocks of banked or recycled controlled substances, also bearing in mind the developing countries' need for controlled substances.''

The procedure set out by Decision IV/25 first calls for individual Parties to nominate essential-uses, and the amount of ODS needed for that essential-use on an annual basis. The Protocol's Technology and Economic Assessment Panel evaluates the nominated essential-uses and makes recommendations to the Protocol Parties. The Parties make the final decisions on whether to approve a Party's essential-use nomination at their annual meeting.

Once the U.S. nomination is approved by the Parties, EPA allocates essential-use exemptions to specific entities through notice-and-comment rulemaking in a manner consistent with the CAA. Under the CAA and the Montreal Protocol, EPA is authorized to allocate essential-use allowances in quantities below or equal to the amounts approved by the Parties. EPA cannot allocate essential-use allowances in amounts higher than is approved by the Parties.

II. Essential Use Allowances for Medical Devices.

A. How Were Essential-Use Allowances for Medical Devices Nominated and Approved by the Parties to the Montreal Protocol?

On November 1, 2000, EPA issued a **Federal Register** notice (65 FR 65311) requesting applications for essential-use allowances for the year 2003. The applications EPA received requested exemptions for the production and import of specific quantities of CFCs (CFC–11, CFC–12, and CFC–114) for use in metered dose inhalers (MDIs), and provided information in accordance with the criteria set forth in Decision IV/25 of the Protocol and the procedures outlined in the ''1997 Handbook on Essential Use Nominations.'' Based on the information provided in these applications, and after consultation with the Food and Drug Administration (FDA), the U.S. forwarded a request for 3,270 metric tons of CFCs for use in metered dose inhalers to the Ozone Secretariat for consideration by the Technical and Economic Assessment Panel (TEAP) and the Aerosol Technical Options Committees (ATOC). The Parties approved the U.S. request for 3,270 metric tons of CFCs for essential-uses in Decision XIII/8 taken at the 2001 Meeting of the Parties.

B. How Does the Clean Air Act Authorize Essential-Use Allowances?

The CAA provides exemptions under section 604(d) to the phase-out of class I ODSs. With today's action, EPA is proposing to implement the exemption at 604(d)(2) of the Act which states that ''notwithstanding the phase-out, EPA shall, to the extent consistent with the Montreal Protocol, authorize production of limited quantities of class I ODSs for use in medical devices, if FDA, in consultation with EPA, determines that such production is necessary for use in medical devices''. The term ''medical device'' is defined in section 601(8) of the Clean Air Act as follows:

''[A]ny device (as defined in the Federal Food, Drug, and Cosmetic Act (21 U.S.C. 321)), diagnostic product, drug (as defined in the Federal Food, Drug, and Cosmetic Act), and drug delivery system

(A) If such device, product, drug, or drug delivery system utilizes a class I or class II substance for which no safe and effective alternative has been developed, and where necessary, approved by the Commissioner [of FDA]; and

(B) if such device, product, drug, or drug delivery system, has, after notice and opportunity for public comment, been approved and determined to be essential by the Commissioner [of FDA] in consultation with the Administrator [of EPA].''

With today's action, EPA is proposing to allocate essential-use allowances for use in MDIs that have previously been determined to fit the definition of medical device above. For a full discussion of the definition of ''medical device'', and how it has been interpreted and applied in today's rulemaking please, refer to the interim final rule for the year 2000 allocation of essential-use allowances (65 FR 716).

C. What Was the Allocation Process for Essential-Use Allowances for Medical Devices?

The following is a step-by-step list of actions EPA and FDA have taken thus far to implement the exemption for medical devices found at section 604(d)(2) of the Act for the 2003 control period.

1. On March 4, 2002, EPA sent letters to MDI manufacturers requesting the following information under section 114 of the Act (''114 letters''):

a. The MDI product where CFCs will be used;

b. The number of units of each MDI product produced from 1/1/02 to 12/31/01;

c. The number of units anticipated to be produced in 2003;

d. The gross target fill weight per unit (grams);

e. Total amount of CFCs to be contained in the MDI product for 2003;

f. The additional amount of CFCs necessary for production;

g. The total CFC request per MDI product for 2003.

The letters requesting information that EPA sent each company are available for review in the Air Docket No. A–93–39. The company's responses, however, are considered confidential business information and are not publicly available.

2. On May 24, 2002, EPA sent FDA the information MDI manufacturers provided in response to the 114 letters along with a letter requesting that FDA make a determination regarding the amount of CFCs necessary for MDIs for calendar year 2003.

3. On July 3, 2002, FDA sent a letter to EPA stating the amount of CFCs necessary for each MDI company in 2003. This letter is available in the public docket. In accordance with the determination made by FDA, today's action proposes to allocate essential-use allowances for a total of 3,270 metric tons of CFCs for use in MDIs for the year 2003 calendar year.

D. How Were the Decisions on the Amounts of Essential-Use Allowances for Each Company Made?

In their July 3, 2003 determination letter, FDA describes how the amount of CFCs necessary for use in MDIs was determined. They state the following: ''Under our existing regulations and our proposed rule [3], we have interpreted the CAA definition of medical device to refer to any product that contains an active moiety [4] that appears on the essential-use list found at 21 CFR 2.125. We further understand that under the Montreal Protocol, and therefore under the CAA, only products for the treatment of asthma or chronic obstructive pulmonary disease (COPD) are eligible for essential-use nominations and allocations. Under this definition, the sponsor of any drug product produced under an approved new drug application, abbreviated new drug application, or valid investigational new drug application, approved for the treatment of asthma or COPD, and containing an active moiety on our essential use list may obtain CFCs. We also understand that under Decision XII/2 of the 12th Meeting of the Parties to the Montreal Protocol, any CFC metered-dose inhaler product (MDI) for the treatment of asthma and/or COPD approved after December 31, 2000, in a non-Article 5(1) Party is not an essential-use, unless the product meets the criteria set out in paragraph 1(a) of Decision IV/25.

''With these definitions in mind, we [FDA] have examined the information you [EPA] obtained from individual sponsors regarding their historical and intended use of CFCs in specific products. We compared this information to the number of CFC MDIS necessary to ensure the public health of the United States and the quantities of CFCs needed to ensure the manufacture and continuous availability of those necessary MDIs. In listing the amounts we believe to be necessary for use in medical devices, we referred to this information, eliminated any double-counting or redundancy we found, considered changes in the prevalence of asthma and COPD, and eliminated allocations for uses not considered essential by the Parties to the Montreal Protocol, even if those uses are currently listed in our regulations at 21 CFR 2.125(e).''

E. Will the Amounts Actually Allocated in the Final Rule Be the Same as the Amounts Listed in This Proposed Rule?

The amounts listed in this proposal are subject to additional review by EPA and FDA if new information demonstrates that the proposed allocations are either too high or too low. Commentors requesting increases or decreases of essential-use allowances should provide detailed information supporting their claim for additional or fewer CFCs. Any company that no longer needs the full amount listed in this proposal should notify EPA of the actual amount needed.

III. Exemption for Methyl Chloroform for Use in the Space Shuttle and Titan Rockets

EPA is proposing to allocate methyl chloroform (MCF) for use in solid rocket motor assemblies. The CAA exemption for continued production and import of methyl chloroform is found at 604(d)(1) and reads as follows:

(1) Essential Uses of Methyl Chloroform.—Notwithstanding the termination of production required by subsection (b), during the period beginning on January 1, 2002, and ending on January 1, 2005, the Administrator [of EPA], after notice and opportunity for public comment, may, to the extent such action is consistent with the Montreal Protocol, authorize the production of limited quantities of methyl chloroform solely for use in essential applications (such as nondestructive testing for metal fatigue and corrosion of existing airplane engines and airplane parts susceptible to metal fatigue) for which no safe and effective substitute is available. Notwithstanding this paragraph, the authority to produce methyl chloroform for use in medical devices shall be provided in accordance with paragraph (2).

Decision X/6 states that ''* * * the remaining quantity of methyl chloroform authorized for the United States at previous meetings of the Parties [will] be made available for use in manufacturing solid rocket motors until such time as the 1999–2001 quantity of 176.4 tons (17.6 ODP-weighted tons) allowance is depleted, or until such time as safe alternatives are implemented for remaining essential-uses.'' According to the EPA tracking system, the total amount of MCF produced or imported by essential-use allowance holders from 1999 through 2001 was 28.3 metric tons, well below the limit of 176.4 metric tons. Based on the need for MCF for the space shuttle and Titan Rocket, EPA is proposing to allocate 13.2 metric tons of MCF for 2003.

Essential-use allowance holders should be aware that the exemption for MCF under section 604(d)(1) of the CAA expires in the year 2005. Thus, EPA will not have statutory authority to allocate essential-use allowances for MCF after that date.

IV. Allocation of Essential-Use Allowances for Medical Devices and the Space Shuttle and Titan Rockets for Calendar Year 2003

EPA is proposing to allocate essential-use allowances for calendar year 2003 to entities listed in Table I for exempted production or import of the specific quantity of class I controlled substances solely for the specified essential-use.

TABLE I.—ESSENTIAL USE ALLOCATION FOR CALENDAR YEAR 2003

Company	Chemical	Quantity (metric tons)
(i) Metered Dose Inhalers (for oral inhalation) for Treatment of Asthma and Chronic Obstructive Pulmonary Disease		
Armstrong Pharmaceuticals	CFC–11 or CFC–12 or CFC–114	574
Aventis	CFC–11 or CFC–12 or CFC–114	48
Boehringer Ingelheim Pharmaceuticals	CFC–11 or CFC–12 or CFC–114	907
GlaxoSmithKline	CFC–11 or CFC–12 or CFC–114	535
Schering-Plough Corporation	CFC–11 or CFC–12 or CFC–114	937

[3] Use of Ozone-Depleting Substances; Essential Use Determinations, September 1, 1999. (64 FR 47719). The final rule was published on July 24, 2002, and will take effect January 20, 2003 (67 FR 48370).

[4] An FDA regulation at 21 CFR 314.108(a) defines active moiety as '' the molecule or ion excluding those appended portions of the molecule that cause the drug to be an ester, salt (including a salt with hydrogen or coordination bonds), or other noncovalent derivative (such as a complex, a chelate or clathrate) of the molecule, responsible for the physiological or pharmacological action of the drug substance.''

TABLE I.—ESSENTIAL USE ALLOCATION FOR CALENDAR YEAR 2003—Continued

Company	Chemical	Quantity (metric tons)
Sidmak Laboratories Inc.	CFC–11 or CFC–12 or CFC–114	136
3M Pharmaceuticals	CFC–11 or CFC–12 or CFC–114	133
(ii) Cleaning, Bonding and Surface Activation Applications for the Space Shuttle Rockets and Titan Rockets		
National Aeronautics and Space Administration (NASA)/Thiokol Rocket	Methyl Chloroform	9.8
United States Air Force/Titan Rocket	Methyl Chloroform	3.4

VI. Administrative Requirements

A. Unfunded Mandates Reform Act

Title II of the Unfunded Mandates Reform Act of 1995 (UMRA), Public Law 104–4, establishes requirements for Federal agencies to assess the effects of their regulatory actions on State, local, and tribal governments and the private sector. Under section 202 of the UMRA, EPA generally must prepare a written statement, including a cost-benefit analysis, for proposed and final rules with ''Federal mandates'' that may result in expenditures to State, local, and tribal governments, in the aggregate, or to the private sector, of $100 million or more in any one year. Before promulgating an EPA rule for which a written statement is needed, section 205 of the UMRA generally requires EPA to identify and consider a reasonable number of regulatory alternatives and adopt the least costly, most cost-effective or least burdensome alternative that achieves the objectives of the rule. The provisions of section 205 do not apply when they are inconsistent with applicable law. Moreover, section 205 allows EPA to adopt an alternative other than the least costly, most cost-effective or least burdensome alternative if the Administrator publishes with the final rule an explanation why that alternative was not adopted. Before EPA establishes any regulatory requirements that may significantly or uniquely affect small governments, including tribal governments, it must have developed under section 203 of the UMRA a small government agency plan. The plan must provide for notifying potentially affected small governments, enabling officials of affected small governments to have meaningful and timely input in the development of EPA regulatory proposals with significant Federal intergovernmental mandates, and informing, educating, and advising small governments on compliance with the regulatory requirements.

Today's rule contains no Federal mandates (under the regulatory provisions of Title II of the UMRA) for State, local, or tribal governments or the private sector, since it merely provides exemptions the 1996 phaseout of class I ODSs. Similarly, EPA has determined that this rule contains no regulatory requirements that might significantly or uniquely affect small governments. Again, this is because this rule merely allocates essential use exemptions to entities as an exemption to the ban on production and import of class I ODSs.

B. Executive Order 12866

Under Executive Order 12866 (58 FR 51735, October 4, 1993), the Agency must determine whether this regulatory action is ''significant'' and therefore subject to OMB review and the requirements of the Executive Order. The Order defines ''significant regulatory action'' as one that is likely to result in a rule that may:

(1) Have an annual effect on the economy of $100 million or more or adversely affect in a material way the economy, a sector of the economy, productivity, competition, jobs, the environment, public health or safety, or State, local, or tribal governments or communities;

(2) Create a serious inconsistency or otherwise interfere with an action taken or planned by another agency;

(3) Materially alter the budgetary impact of entitlement, grants, user fees, or loan programs or the rights and obligations of recipients thereof; or

(4) Raise novel legal or policy issues arising out of legal mandates, the President's priorities, or the principles set forth in the Executive Order. It has been determined that this rule is not a ''significant regulatory action'' under the terms of Executive Order 12866 and is therefore not subject to OMB review.

C. Paperwork Reduction Act (PRA)

This action does not add any information collection requirements or increase burden under the provisions of the Paperwork Reduction Act, 44 U.S.C. 3501 *et seq.* The Office of Management and Budget (OMB) previously approved the information collection requirements contained in the final rule promulgated on May 10, 1995, and assigned OMB control number 2060–0170 (EPA ICR No. 1432.21).

Burden means the total time, effort, or financial resources expended by persons to generate, maintain, retain, or disclose or provide information to or for a Federal agency. This includes the time needed to review instructions; develop, acquire, install, and utilize technology and systems for the purposes of collecting, validating, and verifying information, processing and maintaining information, and disclosing and providing information; adjust the existing ways to comply with any previously applicable instructions and requirements; train personnel to be able to respond to a collection of information; search data sources; complete and review the collection of information; and transmit or otherwise disclose the information. An Agency may not conduct or sponsor, and a person is not required to respond to a collection of information unless it displays a currently valid OMB control number. The OMB control numbers for EPA's regulations are listed in 40 CFR part 9 and 48 CFR Chapter 1.

D. Executive Order 13175 (Consultation and Coordination with Indian Tribal Governments)

Executive Order 13175, entitled ''Consultation and Coordination with Indian Tribal Governments'' (65 FR 67249, November 6, 2000), requires EPA to develop an accountable process to ensure ''meaningful and timely input by tribal officials in the development of regulatory policies that have tribal implications.'' ''Policies that have tribal implications'' is defined in the Executive Order to include regulations that have ''substantial direct effects on one or more Indian tribes, on the relationship between the Federal government and the Indian tribes, or on the distribution of power and responsibilities between the Federal government and Indian tribes.''

This proposed rule does not have tribal implications. It will not have substantial direct effects on tribal governments, on the relationship

between the Federal government and Indian tribes, or on the distribution of power and responsibilities between the Federal government and Indian tribes, as specified in Executive Order 13175. Today's rule does not affect the communities of Indian tribal governments since the only entities directly affected by this rule are the companies that requested essential-use allowances. Thus, Executive Order 13175 does not apply to this rule. In the spirit of Executive Order 13175, and consistent with EPA policy to promote communications between EPA and tribal governments, EPA specifically solicits additional comment on this proposed rule from tribal officials.

E. Regulatory Flexibility Act (RFA) as amended by the Small Business Regulatory Enforcement Fairness Act of 1996 (SBREFA), 5 U.S.C. 601 et. seq.

The RFA generally requires an agency to prepare a regulatory flexibility analysis of any rule subject to notice and comment rulemaking requirements under the Administrative Procedure Act or any other statute unless the agency certifies that the rule will not have a significant economic impact on a substantial number of small entities. Small entities include small businesses, small organizations, and small governmental jurisdictions.

For purposes of assessing the impact of today's rule on small entities, small entities is defined as:(1) Pharmaceutical preparations manufacturing businesses (NAICS code 325412) that have less than 750 employees;(2) a small governmental jurisdiction that is a government of a city, county, town, school district or special district with a population of less than 50,000; and (3) a small organization that is any not-for-profit enterprise which is independently owned and operated and is not dominant its field.

After considering the economic impacts of today's proposed rule on small entities, I certify that this action will not have a significant economic impact on a substantial number of small entities. This is because this rule provides an otherwise unavailable benefit to those companies that are receiving essential use allowances.

Although this proposed rule will not have significant economic impact on a substantial number of small entities, we continue to be interested in the potential impact of the proposed rule on small entities and welcome comments related to these issues.

F. Applicability of Executive Order 13045: Protection of Children from Environmental Health Risks and Safety Risks

Executive Order 13045: ''Protection of Children from Environmental Health risks and Safety Risks'' (62 FR 19885, April 23, 1997) applies to any rule that (1) Is determined to be ''economically significant'' as defined under Executive Order 12866, and (2) concerns an environmental health or safety risk that EPA has reason to believe may have a disproportionate effect on children. If the regulatory action meets both criteria, the Agency must evaluate the environmental health or safety effects of the planned rule on children, and explain why the planned regulation is preferable to other potentially effective and reasonably feasible alternatives considered by the Agency. EPA interprets Executive Order 13045 as applying only to those regulatory actions that are based on health or safety risks, such that the analysis required under section 5–501 of the Order has the potential to influence the regulation. This proposed rule is not subject to Executive Order 13045 because it implements the phase-out schedule and exemptions established by Congress in Title VI of the Clean Air Act.

G. National Technology Transfer and Advancement Act

Section 12(d) of the National Technology Transfer and Advancement Act of 1995 (''NTTAA), Pub. L. No. 104–113, section 12(d) (15 U.S.C. 272 note) directs EPA to use voluntary consensus standards in its regulatory activities unless to do so would be inconsistent with applicable law or otherwise impractical. Voluntary consensus standards are technical standards (*e.g.*, materials specifications, test methods, sampling procedures, and business practices) that are developed or adopted by voluntary consensus standards bodies. The NTTAA directs EPA to provide Congress, through OMB, explanations when the Agency decides not to use available and applicable voluntary consensus standards. This proposed rule does not involve technical standards. Therefore, EPA did not consider the use of any voluntary consensus standards.

H. Executive Order 13132 (Federalism)

Executive Order 13132, entitled ''Federalism'' (64 FR 43255, August 10, 1999), requires EPA to develop an accountable process to ensure ''meaningful and timely input by State and local officials in the development of regulatory policies that have federalism implications.'' ''Policies that have federalism implications'' is defined in the Executive Order to include regulations that have ''substantial direct effects on the States, on the relationship between the national government and the States, or on the distribution of power and responsibilities among the various levels of government.''

This proposed rule does not have federalism implications. It will not have substantial direct effects on the States, on the relationship between the national government and the States, or on the distribution of power and responsibilities among the various levels of government, as specified in Executive Order 13132. Thus, Executive Order 13132 does not apply to this rule. In the spirit of Executive Order 13132, and consistent with EPA policy to promote communications between EPA and State and local governments, EPA specifically solicits comment on this proposed rule from State and local officials.

I. Executive Order 13211 (Energy Effects)

This rule is not subject to Executive Order 13211, Actions Concerning Regulations That Significantly Affect Energy Supply, Distribution, or Use (66 FR 28355 (May 22, 2001)) because it is not a significant regulatory action under Executive Order 12866.

List of Subjects in 40 CFR Part 82

Environmental protection, Administrative practice and procedure, Air pollution control, Chemicals, Chlorofluorocarbons, Exports, Imports, Methyl chloroform, Ozone layer.

Dated: October 30, 2002.

Christine Todd Whitman,

Administrator.

40 CFR Part 82 is proposed to be amended as follows:

PART 82—PROTECTION OF STRATOSPHERIC OZONE

1. The authority citation for part 82 continues to read as follows:

Authority: 42 U.S.C. 7414, 7601,7671–7671q.

Subpart A—Production and Consumption Controls

2. Section 82.4 is amended by revising the table in paragraph (t)(2) to read as follows:

§ 82.4 Prohibitions.

* * * * *

(t) * * *

(2) * * *

TABLE I.—ESSENTIAL USE ALLOCATION FOR CALENDAR YEAR 2003

Company	Chemical	Quantity (metric tons)
(i) Metered Dose Inhalers (for oral inhalation) for Treatment of Asthma and Chronic Obstructive Pulmonary Disease		
Armstrong Pharmaceuticals	CFC–11 or CFC–12 or CFC–114	574
Aventis	CFC–11 or CFC–12 or CFC–114	48
Boehringer Ingelheim Pharmaceuticals	CFC–11 or CFC–12 or CFC–114	907
GlaxoSmithKline	CFC–11 or CFC–12 or CFC–114	535
Schering-Plough Corporation	CFC–11 or CFC–12 or CFC–114	937
Sidmak Laboratories Inc.	CFC–11 or CFC–12 or CFC–114	136
3M Pharmaceuticals	CFC–11 or CFC–12 or CFC–114	133
(ii) Cleaning, Bonding and Surface Activation Applications for the Space Shuttle Rockets and Titan Rockets		
National Aeronautics and Space Administration (NASA)/Thiokol Rocket	Methyl Chloroform	9.8
United States Air Force/Titan Rocket	Methyl Chloroform	3.4

* * * * *

[FR Doc. 02–28212 Filed 11–5–02; 8:45 am]

BILLING CODE 6560–50–P

DEPARTMENT OF THE INTERIOR

Fish and Wildlife Service

50 CFR Part 17

RIN 1018–AI11

Endangered and Threatened Wildlife and Plants; Listing the Beluga Sturgeon (*Huso huso*) as Endangered

AGENCY: Fish and Wildlife Service, Interior.

ACTION: Proposed rule; notice of public hearing and extension of comment period.

SUMMARY: The Fish and Wildlife Service (Service) gives notice that a public hearing will be held on the proposal to list the beluga sturgeon (*Huso huso*) under the Endangered Species Act of 1973. The proposal was published on July 31, 2002 (67 FR 49657), in response to a petition received from the Natural Resources Defense Council, the Wildlife Conservation Society, and SeaWeb. The hearing will allow all interested parties to submit additional comments regarding the proposal to list beluga sturgeon under the Endangered Species Act.

DATES: The comment period on the proposal is extended through December 28, 2002. The public hearing will be held from 1 to 4 p.m. on Thursday, December 5, 2002, in Arlington, Virginia.

ADDRESSES: The public hearing will be held in the first floor conference room of the Marymount University, Ballston Campus, 1000 North Glebe Road, Arlington, Virginia, on December 5, 2002. Written comments and materials should be sent to the Chief, Division of Scientific Authority, U.S. Fish and Wildlife Service, Room 750, 4401 N. Fairfax Drive, Arlington, Virginia 22203, or by fax, 703–358–2276, or by e-mail, *ScientificAuthority@fws.gov.* Comments and materials received will be available for public inspection, by appointment, from 8 a.m. to 4 p.m. at the above address.

FOR FURTHER INFORMATION CONTACT: Marie T. Maltese at the above address (telephone 703/358–1708).

SUPPLEMENTARY INFORMATION:

Background

Section 4 (b)(5)(E) of the Endangered Species Act (Act) requires that a public hearing be held on the proposed regulation if any person files a request for such a hearing within 45 days after the date of publication of general notice in the **Federal Register**. Public hearing requests were received during the allotted time period from Mark Berrigan, Chairman, Sturgeon Production Working Group, Florida Department of Agriculture and Consumer Services; Robert Ctvrtlik, Ciram Corporation; Mats Engstrom, President, Tsar Nicoulai Caviar, Inc.; and R. Sherman Wilhelm, Director, Division of Aquaculture, Florida Department of Agriculture and Consumer Services. Anyone expecting to make an oral presentation at these hearings is encouraged to provide a written copy of their statement to the hearing officer prior to the start of the hearing. In the event there is a large attendance, the time allotted for oral statements may have to be limited. Oral and written statements receive equal consideration. There are no limits to the length of written comments presented at this hearing or mailed to the Service. In order to accommodate the presently scheduled public hearing, the Service extends the public comment period. Written comments may now be submitted through December 28, 2002, to the office in the **ADDRESSES** section.

Author

The primary author of this notice is Marie T. Maltese (See **ADDRESSES** section).

Authority: The authority for this action is the Endangered Species Act (16 U.S.C. 1531–1544).

Dated: October 31, 2002.

Steve Williams,

Director, Fish and Wildlife Service.

[FR Doc. 02–28334 Filed 11–5–02; 8:45 am]

BILLING CODE 4310–55–P

Notices

Federal Register

Vol. 67, No. 215

Wednesday, November 6, 2002

This section of the FEDERAL REGISTER contains documents other than rules or proposed rules that are applicable to the public. Notices of hearings and investigations, committee meetings, agency decisions and rulings, delegations of authority, filing of petitions and applications and agency statements of organization and functions are examples of documents appearing in this section.

DEPARTMENT OF AGRICULTURE

Cooperative State Research, Education, and Extension Service

Request for Applications (RFA): Outreach and Assistance for Socially Disadvantaged Farmers and Ranchers

AGENCY: Cooperative State Research Education, and Extension Service, USDA.

ACTION: Notice of request for applications and request for input.

SUMMARY: The Cooperative State Research, Education, and Extension Service (CSREES) announces the availability of grant funds and requests applications for the Outreach and Assistance for Socially Disadvantaged Farmers and Ranchers Competitive Grants Program (OASDFR). This program provides outreach and technical assistance to encourage and assist socially disadvantaged farmers and ranchers to own and operate farms and ranches and to participate in agricultural programs. Appropriations for this program from fiscal years (FYs) 2002 and 2003 will be combined to support projects submitted in response to this Request for Applications (RFA). The amount available for FY 2002 is approximately $3,243,000. The FY 2003 appropriations is not known at the time this notice is being published but is currently anticipated between 3 and 8 million dollars. Grants will be made for proposals found to be meritorious by a peer review panel to the extent that funds are available. However, there is no commitment by USDA to fund any particular proposal or to make a specific number of awards.

This notice identifies the objectives for OASDFR projects, the eligibility criteria for projects and applicants, and the application forms and associated instructions needed to apply for an OASDFR grant. CSREES additionally requests stakeholder input from any interested party for use in the development of the next RFA for this program.

DATES: Applications must be received by close of business (COB) on January 31, 2003 (5 p.m. Eastern Time). Applications received after this deadline will not be considered for funding. Requests for Determination must be received by COB November 22, 2002. Comments regarding this RFA are requested within six months from the issuance of this notice. Comments received after that date will be considered to the extent practicable.

ADDRESSES: The address for hand-delivered applications, or applications submitted using an express mail or overnight courier service is: Outreach and Assistance for Socially Disadvantaged Farmers and Ranchers Competitive Grants Program; c/o Proposal Services Unit; Cooperative State Research, Education, and Extension Service; U.S. Department of Agriculture; Room 1420, Waterfront Centre; 800 9th Street, SW., Washington, DC 20024; *telephone:* (202) 401–5048. Requests for Determination should be delivered or e-mailed to the program contact identified in Part I.D.

Written stakeholder comments should be mailed to: Policy and Program Liaison Staff; Office of Extramural Programs; USDA–CSREES; STOP 2299; 1400 Independence Avenue, SW., Washington, DC 20250–2299; or via e-mail to: *RFP–OEP@reeusda.gov*. (This e-mail address is intended only for receiving comments regarding this RFA and not requesting information or forms.) In your comments, please state that you are responding to the Outreach and Assistance for Socially Disadvantaged Farmers and Ranchers Competitive Grants Program RFA.

FOR FURTHER INFORMATION CONTACT: Dr. Elizabeth Tuckermanty, Program Director, Cooperative State Research, Education, and Extension Service; U.S. Department of Agriculture; STOP 2241, 1400 Independence Avenue, SW., Washington, DC 20250–2242; *telephone:* (202) 205–0241; fax: (202) 401–6488; *e-mail: etuckermanty@reeusda.gov.*

SUPPLEMENTARY INFORMATION:

Table of Contents

Stakeholder Input

Catalog of Federal Domestic Assistance

Part I—General Information

A. Legislative Authority and Background
B. Purpose, Priorities, and Fund Availability
C. Eligibility
D. Request for Determination
E. Indirect Costs
F. Matching Requirements
G. Funding Restrictions
H. Type of Application

Part II—Program Description

A. Project Types
B. Program Description

Part III—Preparation of an Application

A. Program Application Materials
B. Content of Applications
C. Submission of Applications
D. Acknowledgment of Applications

Part IV—Review Process

A. General
B. Evaluation Criteria
C. Conflicts-of-Interest and Confidentiality

Part V—Award Administration

A. General
B. Organizational Management Information
C. Award Document and Notice of Award

Part VI—Additional Information

A. Access to Review Information
B. Use of Funds; Changes
C. Expected Program Outputs and Reporting Requirements
D. Applicable Federal Statutes and Regulations
E. Confidential Aspects of Applications and Awards
F. Regulatory Information
G. Definitions

Stakeholder Input

CSREES is requesting comments regarding this RFA from any interested party. These comments will be considered in the development of the next RFA for the program. Such comments will be used to meet the requirements of section 103(c)(2) of the Agricultural Research, Extension, and Education Reform Act of 1998 (7 U.S.C. 7613(c)(2)). This section requires the Secretary to solicit and consider input on a current RFA from persons who conduct or use agricultural research, education and extension for use in formulating future RFA's for competitive programs. Comments should be submitted as provided for in the **ADDRESSES** and **DATES** portions of this Notice.

Catalog of Federal Domestic Assistance

This program is listed in the Catalog of Federal Domestic Assistance under 10.443, Outreach and Assistance for Socially Disadvantaged Farmers and Ranchers Program.

Part I—General Information

A. Legislative Authority and Background

Section 2501(a) of the Food, Agriculture, Conservation, and Trade Act of 1990, Public Law 101–624, November 28, 1990, (7 U.S.C. 2279(a)) authorizes the Secretary to make grants to eligible institutions and organizations so that they may provide outreach and technical assistance to encourage and assist socially disadvantaged farmers and ranchers to own and operate farms and ranches and to participate equitably in the full range of agricultural programs offered by the Department. This assistance shall enhance coordination of the outreach, technical assistance, and education efforts authorized under various agriculture programs and include information on and assistance with commodity, conservation, credit, rural, and business development programs, application and bidding procedures, farm and risk management, marketing and other activities essential to participation in agricultural and other programs of the Department.

The OASDFR brings the existing knowledge base to bear on farm and ranch management issues faced by socially disadvantaged farmers and ranchers throughout the Nation.

B. Purpose, Priorities, and Fund Availability

1. Purpose and Priorities

The primary purpose of the OASDFR is to deliver outreach and technical assistance, including educational programs, to enhance the potential of socially disadvantaged farmers and ranchers to successfully acquire, own, operate, and retain farms and ranches. The OASDFR will support a wide range of outreach and assistance activities in farm management, financial management, marketing, application and bidding procedures, and other areas.

Proposals need to identify the socially disadvantaged group(s) that is being targeted for assistance. (See Part VI.G., definition nos. 33 and 34.) Applicants must provide information to document why a targeted group(s) is appropriate for assistance under this program. If you are targeting a socially disadvantaged group not specified in the above definition(s), you must provide in-depth documentation justifying why this group(s) is socially disadvantaged. This document, entitled a Request for Determination, requests the Secretary to determine whether the targeted group qualifies under the Program. A determination by the Secretary or designated individual will be made and the applicant will be notified shortly thereafter. (See Part I.D., Request for Determination).

Proposed projects might include one or more of the following: The use of existing, and the formation of new, outreach and assistance networks focused on increasing participation in various USDA and other programs by socially disadvantaged agricultural producers; further development or modification of farm and ranch management (including marketing) and financial management curricula and materials designed to enhance the potential for farm and ranch ownership by socially disadvantaged farmers and ranchers; the development of innovative delivery systems that improve the effectiveness of these programs; and the development or improvement in the means by which assistance is provided to the targeted audiences.

Proposals need to incorporate a project evaluation component that will permit a qualitative and quantitative assessment of expected project impacts. How will success of the proposed project be measured? Such assessments need to relate to increases in participation rates in USDA programs and in increasing the ownership of farming and ranching operations by socially disadvantaged farmers and ranchers.

Priority will be given to projects that identify and document the outreach and assistance needs of socially disadvantaged farmers and ranchers as they exist at regional, State and local levels, and that propose effective educational and assistance programs that address those needs. It is incumbent upon the applicant(s) to adequately define and justify the needs of the disadvantaged group(s) the project is targeting. Proposed projects should, as appropriate, address needs as determined by: Producer audiences; commodity mixes in the area(s) of interest; types of outreach and assistance needs associated with available and appropriate USDA and other agricultural programs; production, marketing, financial, legal and human resource conditions in the area(s) being addressed; and/or other factors that hold the greatest potential for assisting these producers in gaining and maintaining ownership of their farms and ranches or that enhance the opportunity for ownership.

The OASDFR will also fund projects that provide OASDFR assistance in applying for and receiving aid under USDA programs administered by various agencies within the Department of Agriculture. These include but are not limited to loan programs, guaranteed loan programs, allocations of crop base in each program crop, and various conservation programs. Pertinent USDA agricultural programs include but are not limited to the following, identified by the Federal Domestic Assistance title and number: Emergency Conservation Program (10.054); Production and Flexibility Payments for Contract Commodities (10.055); Forestry Incentives Program (10.064); Conservation Reserve Program (10.069); Emergency Loans (10.404); Farm Ownership Loans (10.407); Great Plains Conservation (10.900); and Soil Survey (10.903). There may be other Federal and State agricultural programs that also could assist members of socially disadvantaged groups. Applicants should provide a brief, relevant synopsis on the program(s) they are incorporating in their proposed project.

2. Funds Availability

Appropriations for this program from fiscal years (FYs) 2002 and 2003 will be combined to support projects submitted in response to this Request for Applications. The amount available for FY 2002 is approximately $3,243,000. The FY 2003 appropriation is not known at the time this notice is being published but is currently anticipated between 3 and 8 million dollars. Grants will be made for proposals found to be meritorious by a peer review panel to the extent that funds are available. However, there is no commitment by USDA to fund any particular proposal or to make a specific number of awards.

Normally, awards will not exceed $100,000 per year for three years ($300,000 total) for Standard Projects (see Part II.A.). Any proposed project that exceeds these parameters will need to fully justify the increases. Conference/workshop awards will not normally exceed $10,000 and are limited to a one-year duration. However, conference/workshops that are regional or national in scope may receive larger awards, but normally will not exceed $25,000.

C. Eligibility

1. Applications may be submitted by:

(a) *Any community-based organization, network, or coalition of community-based organizations that:*

(i) has demonstrated experience in providing agricultural education or other agriculturally related services to socially disadvantaged farmers and ranchers;

(ii) as provided to the Secretary documentary evidence of work with socially disadvantaged farmers and ranchers during the two-year period preceding the submission of an application for assistance under this program (documentary evidence shall include a narrative providing specific information regarding: the scope of past projects, including the number of socially disadvantaged farmers and ranchers served or in the area served by the organization; activities conducted; community involvement; and copies of prior agreements, press releases, news articles, and other contemporaneous documents supporting the narrative); and

(iii) does not engage in activities prohibited under Section 501(c)(3) of the Internal Revenue Code of 1986.

(b) An 1890 institution or 1994 institution (as defined in section 2 of the Agricultural Research, Extension, and Education Reform Act of 1998 (7 U.S.C. 7601)), including West Virginia State College.

(c) An Indian Tribal Community College or an Alaska Native Cooperative College.

(d) An Hispanic-serving institution (as defined in section 1404 of the National Agricultural Research, Extension, and Teaching Policy Act of 1977 (7 U.S.C. 3103)).

(e) Any other institution of higher education (as defined in section 101 of the Higher Education Act of 1965 (20 U.S.C. 1001)) that has demonstrated experience in providing agriculture education or other agriculturally related services to socially disadvantaged farmers and ranchers in a region.

(f) An Indian tribe (as defined in section 4 of the Indian Self-Determination and Education Assistance Act (25 U.S.C. 450b)) or a national tribal organization that has demonstrated experience in providing agriculture education or other agriculturally related services to socially disadvantaged farmers and ranchers in a region.

(g) An organization or institution that received funding under this program before January 1, 1996, but only with respect to projects that the Secretary considers are similar to projects previously carried out by the organization or institution under this program.

Award recipients may subcontract to organizations not eligible to apply provided such organizations are necessary for the conduct of the project; however, the subcontracted amount may not exceed one-third of the total grant award.

D. Request for Determination

If an applicant proposes to fund a program targeted to a socially disadvantaged group(s) not specifically identified in the Definitions section of this RFA, the applicant must submit documentation supporting their request to CSREES by November 22, 2002. The Secretary or designated individual will determine whether the group or groups identified are eligible under this Program. The Request for Determination must be submitted as a separate letter (or e-mail to the program contact identified at the beginning of this RFA). The legend at the top of the letter must read ''REQUEST FOR DETERMINATION.'' In addition the following information must be provided in the order specified below:

(a) Description of Racial or Ethnic Group Submitted for Determination; and

(b) Data or Studies Supporting Designation of Racial, Ethnic or Socially Disadvantaged Group.

Each applicant in this category will be notified as to the outcome of the determination. If the determination is positive, the applicant will be invited to submit an application as outlined in this RFA by January 31, 2003.

E. Indirect Costs

Pursuant to section 1462 of the National Agricultural Research, Extension, and Teaching Policy Act of 1977, as amended (7 U.S.C. 3310), indirect costs for this program are limited to 19 percent of the total Federal funds provided under each award. Therefore, the recovery of indirect costs under this program may not exceed the lesser of the institution's official negotiated indirect cost rate or the equivalent of 19 percent of total Federal funds awarded. Another method of calculating the maximum allowable is 23.456 percent of the total direct costs. (This limitation also applies to the recovery of indirect costs by any subawardee or subcontractor, and should be reflected in the subrecipient budget.) If no rate has been negotiated, a reasonable dollar amount (equivalent to or less than 19 percent of total Federal funds requested) in lieu of indirect costs may be requested, subject to approval by USDA. This same indirect cost limitation applies to subcontracts.

F. Matching Requirements

There is no requirement for grant recipients to provide matching funds under this program.

G. Funding Restrictions

Program funds may not be used for the renovation or refurbishment of research, education or extension space; the purchase or installation of fixed equipment in such space; or the planning, repair, rehabilitation, acquisition, or construction of buildings or facilities.

H. Type of Application

All applications submitted to this Request for Applications (RFA) will be new requests to CSREES. Previous recipients of funds under this program may apply to this RFA. All applications must contain information requested under the ''Content of Applications'' section of this RFA (see Part III.B.), be received by the deadline date shown in Part III.C., and will be reviewed competitively using the selection process and evaluation criteria described in Part IV., Review Process.

Part II—Program Description

A. Project Types

1. Standard Projects

Standard Projects are those that provide assistance and outreach to socially disadvantaged farmers and ranchers with the ultimate aim of increasing and retaining ownership. Standard projects that incorporate multiple collaborators, particularly community-based collaborators, are encouraged. It is incumbent upon the applicants to document the potential impact of their project upon socially disadvantaged farmers and ranchers. Information as to the degree to which partnerships and collaborations enhance the services to be delivered, and the areas and numbers of the targeted audience that are expected to be served in terms of assistance should be provided. Outreach designed to inform the targeted audience of the assistance available through the OASDFR, and the expected outcomes in terms of increased ownership of farms and ranches are also important considerations that should be explicitly discussed. While the development of a needs assessment is acceptable, applicants should understand that proposals that utilize an existing needs assessment to justify their proposed project are often more competitive than those that have as one of the project objectives the

development of a needs assessment. In addition, proposals which document how certain methodologies or results are transferable to other areas also strengthens a proposal.

Standard Project applicants are encouraged to coordinate with any existing regional projects and complement pertinent and relevant cross-regional activities. Proposals that build on existing information networks and offer innovative or expanded activities are encouraged. Applicants are encouraged to closely examine the evaluation criteria noted in Part IV.B. as they prepare their proposals.

In addition to the above, Standard Project proposals should address or target one or more of the specific items below:

(a) Meet a specialized OASDFR need that is local, State-specific, regional or national in scope, (*e.g.*, national coordination of OASDFR efforts) and that has common characteristics that can be addressed in a single project. Projects that are local or State-specific need to provide evidence that the problem or need being addressed also exists elsewhere and that the methodologies and results may have application in these other areas.

(b) Be willing to share findings with other interested entities and organizations by providing information on methodologies, data, analytical techniques, findings, etc.

The amount requested must be commensurate with the activities proposed. Normally, Standard Project awards will not exceed $100,000 per year for a three-year duration (total of $300,000). However, with appropriate and compelling justification, larger awards may be granted and the time period may be extended to four years.

2. Conference and Workshop Proposals

Proposed conferences and workshops are important tools in providing assistance and outreach. They may be used by interested parties to gather and establish a needs assessment and determine priorities. Conference and workshops are an excellent vehicle to determine group needs, collect data and discuss other relevant issues. This information may, in turn, be used to develop a Standard Project proposal that addresses a group's needs. Alternatively, such meetings can serve to exchange information concerning past and present activities, and future needs. In addition, OASDFR conferences that promote program coordination, provide the opportunity to train educators on OASDFR project tools and methods, build community-based partnerships and collaborations, provide various techniques for individual project internal evaluations, and establish strategies that result in successful projects are also encouraged.

Conference and workshop applicants must set forth the purpose and need for the conference, ensure that an agenda is articulated, including a list of participant groups and experts on the proposed subject(s), and list speakers (invited and confirmed) with their expertise noted. (*See* Part III.B.5.) Awards for a conference or a workshop will normally not exceed $10,000. A larger amount may be awarded provided a conference is multi-regional or national in scope. Normally, these latter awards will not exceed $25,000.

B. Program Description

The primary purpose of the OASDFR is to deliver outreach and technical assistance, including educational programs, to enhance the potential of socially disadvantaged farmers and ranchers to successfully acquire, own, operate, and retain farms and ranches. The OASDFR will support a wide range of outreach and assistance activities in farm management, financial management, marketing, application and bidding procedures, and other areas. Proposed projects might include one or more of the following: The use of existing, and the formation of new, outreach and assistance networks focused on increasing participation in various USDA and other programs by socially disadvantaged agricultural producers; further development or modification of farm and ranch management (including marketing) and financial management curricula and materials designed to enhance the potential for farm and ranch ownership by socially disadvantaged farmers and ranchers; the development of innovative delivery systems that improve the effectiveness of these programs; and the development or improvement in the means by which assistance is provided to the targeted audiences.

Proposals need to incorporate a project evaluation component that will permit a qualitative and quantitative assessment of expected project impacts. How will success of the proposed project be measured? Such assessments need to relate to increases in participation rates in USDA programs and in increasing the ownership of farming and ranching operations by socially disadvantaged farmers and ranchers.

Priority will be given to projects that identify and document the outreach and assistance needs of socially disadvantaged farmers and ranchers as they exist at regional, State and local levels, and that propose effective educational and assistance programs that address those needs. It is incumbent upon the applicant(s) to adequately define and justify the needs of the disadvantaged group(s) the project is targeting. Proposed projects should, as appropriate, address needs as determined by: Producer audiences; commodity mixes in the area(s) of interest; types of outreach and assistance needs associated with available and appropriate USDA and other agricultural programs; production, marketing, financial, legal and human resource conditions in the area(s) being addressed; and/or other factors that hold the greatest potential for assisting these producers in gaining and maintaining ownership of their farms and ranches or that enhance the opportunity for ownership.

The OASDFR will also fund projects that provide OASDFR assistance in applying for and receiving aid under USDA programs administered by various agencies within the Department of Agriculture. These include but are not limited to loan programs, guaranteed loan programs, allocations of crop base in each program crop, and various conservation programs. Pertinent USDA agricultural programs include but are not limited to the following, identified by the Federal Domestic Assistance title and number: Emergency Conservation Program (10.054); Production and Flexibility Payments for Contract Commodities (10.055); Forestry Incentives Program (10.064); Conservation Reserve Program (10.069); Emergency Loans (10.404); Farm Ownership Loans (10.407); Great Plains Conservation (10.900); and Soil Survey (10.903). There may be other Federal and State agricultural programs that also could assist members of socially disadvantaged groups. Applicants should provide a brief, relevant synopsis on the program(s) they are incorporating in their proposed project.

Part III—Preparation of an Application

A. Program Application Materials

Program application materials are available at the CSREES Funding Opportunities Web site (*http://www.reeusda.gov/1700/funding/ourfund.htm*). If you do not have access to the Web page or have trouble downloading material and you would like a hard copy, you may contact the Proposal Services Unit, USDA/CSREES at (202) 401–5048. When calling the Proposal Services Unit, please indicate that you are requesting the RFA and associated application forms for the

Outreach and Assistance for Socially Disadvantaged Farmers and Ranchers Competitive Grants Program. These materials also may be requested via Internet by sending a message with your name, mailing address (not e-mail) and phone number to *psb@reeusda.gov*. State that you want a copy of the Outreach and Assistance for Socially Disadvantaged Farmers and Ranchers Competitive Grants Program RFA and the associated application forms.

B. Content of Applications

The proposals should be prepared following the guidelines and the instructions below. Each proposal must contain the following elements in the order indicated:

1. General

Use the following guidelines to prepare an application. Proper preparation of applications will assist reviewers in evaluating the merits of each application in a systematic, consistent fashion:

(a) Prepare the application on only one side of the page using standard size (8½″ × 11″) white paper, one-inch margins, typed or word processed using no type smaller than 12 point font, and single or double spaced. Use an easily readable font face (*e.g.*, Geneva, Helvetica, Times Roman).

(b) Number each page of the application sequentially, starting with the Project Description, including the budget pages, required forms, and any appendices.

(c) Staple the application in the upper left-hand corner. Do not bind. An original and 10 copies (11 total) must be submitted in one package, along with 15 additional copies of the ''Project Summary,'' Form CSREES–2003, as a separate attachment.

(d) Include original illustrations (photographs, color prints, *etc.*) in all copies of the application to prevent loss of meaning through poor quality reproduction.

(e) The contents of the application should be assembled in the following order:

(1) Proposal Cover Page (Form CSREES–2002)
(2) Table of Contents
(3) Project Summary (Form CSREES–2003)
(4) Project Description
(5) References
(6) Appendices to Project Description
(7) Key Personnel
(8) Collaborative Arrangements (including Letters of Support)
(9) Conflict-of-Interest List (Form CSREES–2007)
(10) Budget (Form CSREES–2004)
(11) Budget Narrative
(12) Current and Pending Support (Form CSREES–2005)
(13) Assurance Statement(s) (Form CSREES–2008)
(14) Compliance with the National Environmental Policy Act (NEPA) (Form CSREES–2006)
(15) Certification of Compliance to Section 501(c)(3) of the Internal Revenue Code of 1986
(16) Page B, Proposal Cover Page (Form CSREES–2002), Personal Data on Project Director

2. Proposal Cover Page (Form CSREES–2002)

Page A

Each copy of each grant application must contain a ''Proposal Cover Page,'' Form CSREES–2002. One copy of the application, preferably the original, must contain the pen-and-ink signature(s) of the proposing Project Director(s) (PD) and the authorized organizational representative (AOR), the individual who possesses the necessary authority to commit the organization's time and other relevant resources to the project. If there are more than four co-PDs for an application, please list additional co-PDs on a separate sheet of paper (with appropriate information and signatures) and attach to the Proposal Cover Page (Form CSREES–2002). Any proposed PD or co-PD whose signature does not appear on Form CSREES–2002 or attached additional sheets will not be listed on any resulting grant award. Complete both signature blocks located at the bottom of the ''Proposal Cover Page'' form. Please note that Form CSREES–2002 is comprised of two parts—Page A, which is the ''Proposal Cover Page'', and Page B, which is the ''Personal Data on Project Director.''

Form CSREES–2002 serves as a source document for the CSREES grant database; it is therefore important that it be accurately completed in its entirety, especially the e-mail addresses requested in Blocks 4.c. and 18.c. However, the following items are highlighted as having a high potential for errors or misinterpretations:

(a) Type of Performing Organization (Block 6.a. and 6.b.). For Block 6.a., a check should be placed in the appropriate box to identify the type of organization which is the legal recipient named in Block 1. Only one box should be checked. For Block 6.b., please check as many boxes that apply to the affiliation of the PD listed in Block 16.

(b) Title of Proposed Project (Block 7.). The title of the project must be brief (140-character maximum, including spaces), yet represent the major thrust of the effort being proposed.

(c) Program to Which You Are Applying (Block 8.). Enter ''Outreach and Assistance for Socially Disadvantaged Farmers and Ranchers Competitive Grants Program.'' Designate whether your application is for a ''Standard Project,'' ''Conference'' or ''Workshop.''

(d) Type of Request (Block 14.). Check the block for New.

(e) Project Director (PD) (Blocks 16.–19.). Blocks 16.–18. are used to identify the PD and Block 19. to identify co-PDs. If needed, additional co-PDs may be listed on a separate sheet of paper and attached to Form CSREES–2002, the Proposal Cover Page, with the applicable co-PD information and signatures. Listing multiple co-PDs, beyond those required for genuine collaboration, is discouraged.

(f) Other Possible Sponsors (Block 21.). List the names or acronyms of all other public or private sponsors including other agencies within USDA to which your application has been or might be sent. In the event you decide to send your application to another organization or agency at a later date, you must inform the identified CSREES program contact as soon as practicable. Submitting your application to other potential sponsors will not prejudice its review by CSREES; however, submitting the same (*i.e.*, duplicate) application to another CSREES program is not permissible.

Page B

Page B should be submitted only with the original signature copy of the application and should be placed as the last page of the original copy of the application. This page contains personal data on the PD(s). CSREES requests this information in order to monitor the operation of its review and awards processes. This page will not be duplicated or used during the review process. Please note that failure to submit this information will in no way affect consideration of your application.

3. Table of Contents

For consistency and ease in locating information, each application must contain a detailed Table of Contents immediately following the proposal cover page. The Table of Contents should contain page numbers for each component of the application. Page numbering should begin with the first page of the Project Description.

4. Project Summary (Form CSREES–2003)

The application must contain a ''Project Summary,'' Form CSREES–2003. The summary should be

approximately 250 words, contained within the box, placed immediately after the Table of Contents, and not numbered. The names and affiliated organizations of all PDs and co-PDs should be listed on this form, in addition to the title of the project. The summary should be a self-contained, specific description of the activity to be undertaken and should focus on: Overall project goal(s) and supporting objectives; plans to accomplish project goal(s); and relevance of the project to the goals of the Program. The importance of a concise, informative Project Summary cannot be overemphasized for this is the only document that is read by each of the peer panel review members. If there are more than four co-PDs for an application, please list additional co-PD's on a separate sheet of paper (with appropriate information) and attach to the Project Summary (Form CSREES–2003).

5. Project Description

PLEASE NOTE: The Project Description for a Standard Project request shall not exceed 15 pages of written text and up to five additional pages for figures and tables. The Project Description for a Conference or Workshop proposal is limited to five pages of written text. These limitations (15 pages for Standard Project requests and five pages for Conference/Workshop proposals) have been established to ensure fair and equitable competition.

(a) Standard Project

The Project Description should clearly and concisely indicate how the proposed project will meet the objectives and carry out the procedures identified in Part II—Program Description. This section should contain the following:

An introduction which states the goals and objectives of the proposed activities, documents needs, describes ongoing related activities and includes relevant data;

An approach which identifies (1) Proposed activities and methods, (2) expected outcomes, (3) how outcomes will benefit socially disadvantaged farmers and ranchers, and (4) indicators which will verify program results;

A timetable which specifies expected completion dates for each phase of the project; and

Identification of collaborative arrangements including description(s) of how they contribute to completion of the entire project.

(b) Conference and Workshops

An introduction that states goals and objectives and expected outcomes of the conference/workshop, the rationale and justification for the conference/workshop, and how it would advance the goals and objectives of the OASDFR;

A discussion of the topics to be discussed and why they are relevant to the conference/workshop goals and objectives;

An agenda that identifies the topics and speakers (if letters of commitment are not included in the proposal, list speakers as ''invited,'' and when commitment letters are received provide signed copies to the CSREES Program Director or the Director of Integrated Programs). Letters of commitment should identify the topic the speaker will be presenting; and

How will the expected results be conveyed to target audiences? What means will be used? Any follow-up activities?

6. References

All references to works cited should be complete, including titles and all co-authors, and should conform to an acceptable journal format. References are not considered in the page limitation for the Project Description.

7. Appendices to Project Description

Appendices to the Project Description are allowed if they are directly germane to the proposed project. The addition of appendices should not be used to circumvent the text and/or figures and tables page limitations. The peer panel reviewers are evaluating a number of proposals; thus, to the extent possible, extraneous material should be kept to a minimum. Letters of commitment from collaborators/subcontractors and letters of support should be included as an appendix.

8. Key Personnel

The following should be included, as applicable:

(a) The roles and responsibilities of each PD and/or collaborator should be clearly described (and documented in the budget and budget justification if receiving project funds); and

(b) Vitae of the PD and each co-PD, senior associate, and other professional personnel. This section should include vitae of all key persons who are expected to work on the project, whether or not CSREES funds are sought for their support. The vitae should be limited to two (2) pages each in length, excluding publications listings. The vitae should include a presentation of academic and research credentials, as applicable; *e.g.*, earned degrees, teaching experience, employment history, professional activities, honors and awards, and grants received. A chronological list of all publications in refereed journals during the past four (4) years, including those in press, must be provided for each project member for whom a curriculum vitae is provided. Also list only those non-refereed technical publications that have relevance to the proposed project. All authors should be listed in the same order as they appear on each paper cited, along with the title and complete reference as these usually appear in journals. Experience in developing and conveying outreach and assistance to the targeted populations are also significant factors that provide the reviewers with enough salient information as to the capabilities of the applicant(s). This material is very important not only in attesting to the qualifications of the project participants but also for determining necessary information for the Conflict-of-Interest form noted below.

9. Collaborative Arrangements

If it will be necessary to enter into formal consulting or collaborative arrangements with others, such arrangements should be fully explained and justified. If the consultant(s) or collaborator(s) are known at the time of application, a vitae or resume should be provided. In addition, evidence (*e.g.*, letter of commitment) should be provided that details what the collaborators have agreed to provide and the costs of those services. The applicant also will be required to provide additional information on consultants and collaborators in the budget portion of the application. See instructions in the application forms for completing Form CSREES–2004, Budget.

10. Conflict-of-Interest List (Form CSREES–2007)

A ''Conflict-of-Interest List,'' Form CSREES–2007, must be provided for all individuals who have submitted a vitae in response to item 8(b) of this part. Each Form CSREES–2007 should list alphabetically, by the last names, the full names of the individuals in the following categories: (a) All co-authors on publications within the past four years, including pending publications and submissions; (b) all collaborators on projects within the past four years, including current and planned collaborations; (c) all thesis or postdoctoral advisees/advisors within the past four years; and (d) all persons in your field with whom you have had a consulting or financial arrangement

within the past four years, who stand to gain by seeing the project funded. This form is necessary to assist program staff in excluding from application review those individuals who have conflicts of interest or appearances of conflicts of interest with the personnel in the grant application. The CSREES Program Director or the Director of Integrated Programs must be informed of any additional conflicts of interest that arise after the application is submitted.

11. Budget

(a) *Budget Form (Form CSREES–2004)*

Prepare the Budget, Form CSREES–2004, in accordance with instructions provided with the application forms. A budget form is required for each year of requested support. In addition, a cumulative budget is required detailing the requested total support for the overall project period. The budget form may be reproduced as needed by applicants. Funds may be requested under any of the categories listed on the form, provided that the item or service for which support is requested is allowable under the authorizing legislation, the applicable statutes, regulations, and Federal cost principles, and these program guidelines, and can be justified as necessary for the successful conduct of the proposed project. Applicants also must include a budget narrative to justify their budget requests (see item 11(c) of this part).

(b) *Indirect Costs*

See Part I., E. for specific information about the recovery of indirect costs.

(c) *Budget Narrative*

All budget categories, with the exception of Indirect Costs, for which support is requested, must be individually listed (with costs) in the same order as the budget and justified on a separate sheet of paper and placed immediately behind the budget form.

12. Current and Pending Support (Form CSREES–2005)

All applications must contain Form CSREES–2005 listing other current public or private support (including in-house support) to which personnel (*i.e.*, individuals submitting a vitae in response to item 8(b) of this part) identified in the application have committed portions of their time, whether or not salary support for person(s) involved is included in the budget. Please follow the instructions provided on this form. Concurrent submission of identical or similar applications to the possible sponsors will not prejudice application review or evaluation by the CSREES. However, an application that duplicates or overlaps substantially with an application already reviewed and funded (or to be funded) by another organization or agency will not be funded under this program. Please note that the project being proposed should be included in the pending section of the form.

13. Assurance Statement(s) (Form CSREES–2008)

A number of situations encountered in the conduct of projects require special assurances, supporting documentation, etc., before funding can be approved for the project. In addition to any other situation that may exist with regard to a particular project, applications involving any of the following elements must comply with the additional requirements as applicable.

(a) Recombinant DNA or RNA Research

As stated in 7 CFR Part 3015.205 (b)(3), all key personnel identified in the application and all endorsing officials of the proposing organization are required to comply with the guidelines established by the National Institutes of Health entitled, ''Guidelines for Research Involving Recombinant DNA Molecules,'' as revised. If your project proposes to use recombinant DNA or RNA techniques, you must so indicate by checking the ''yes'' box in Block 20 of Form CSREES–2002 (the Proposal Cover Page) and by completing Section A of Form CSREES–2008. For applicable applications recommended for funding, Institutional Biosafety Committee approval is required before CSREES funds will be released. Please refer to the application forms for further instructions.

(b) Animal Care

Responsibility for the humane care and treatment of live vertebrate animals used in any grant project supported with funds provided by CSREES rests with the performing organization. Where a project involves the use of living vertebrate animals for experimental purposes, all key personnel identified in an application and all endorsing officials of the proposing organization are required to comply with the applicable provisions of the Animal Welfare Act of 1966, as amended (7 U.S.C. 2131 *et seq.*), and the regulations promulgated thereunder by the Secretary in 9 CFR parts 1, 2, 3, and 4 pertaining to the care, handling, and treatment of these animals. If your project will involve these animals, you should check ''yes'' in Block 20 of Form CSREES–2002 and complete Section B of Form CSREES–2008. In the event a project involving the use of live vertebrate animals results in a grant award, funds will be released only after the Institutional Animal Care and Use Committee has approved the project. Please refer to the application forms for further instructions.

(c) Protection of Human Subjects

Responsibility for safeguarding the rights and welfare of human subjects used in any grant project supported with funds provided by CSREES rests with the performing organization. Guidance on this issue is contained in the National Research Act, Public Law 93–348, as amended, and implementing regulations promulgated by the Department under 7 CFR Part 1c. If you propose to use human subjects in your project, you should check the ''yes'' box in Block 20 of Form CSREES–2002 and complete Section C of Form CSREES–2008. Please refer to the application forms for additional instructions.

14. Certifications

Note that by signing Form CSREES–2002 the applicant is providing the certifications required by 7 CFR part 3017, regarding Debarment and Suspension and Drug-Free Workplace, and 7 CFR part 3018, regarding Lobbying. The certification forms are included in the application package for informational purposes only. These forms should not be submitted with the application since by signing Form CSREES-2002 your organization is providing the required certifications. If the project will involve a subcontractor or consultant, the subcontractor/consultant should submit a Form AD–1048, Certification Regarding Debarment, Suspension, Ineligibility and Voluntary Exclusion—Lower Tier Covered Transactions, to the grantee organization for retention in their records. This form should not be submitted to USDA.

15. Compliance with the National Environmental Policy Act (NEPA) (Form CSREES–2006)

As outlined in 7 CFR part 3407 (the Cooperative State Research, Education, and Extension Service regulations implementing NEPA), the environmental data for any proposed project is to be provided to CSREES so that CSREES may determine whether any further action is needed. In some cases, however, the preparation of environmental data may not be required. Certain categories of actions are excluded from the requirements of NEPA.

In order for CSREES to determine whether any further action is needed with respect to NEPA, pertinent information regarding the possible

environmental impacts of a particular project is necessary; therefore, Form CSREES–2006, ''NEPA Exclusions Form,'' must be included in the application indicating whether the applicant is of the opinion that the project falls within a categorical exclusion and the reasons therefore. If it is the applicant's opinion that the proposed project falls within the categorical exclusions, the specific exclusion(s) must be identified.

Even though a project may fall within the categorical exclusions, CSREES may determine that an Environmental Assessment or an Environmental Impact Statement is necessary for an activity, if substantial controversy on environmental grounds exists or if other extraordinary conditions or circumstances are present which may cause such activity to have a significant environmental effect.

16. Certification of Compliance to Section 501(c)(3) of the Internal Revenue Code of 1986

Applicants that are not recognized by the Internal Revenue Service as a Section 501(c)(3) organization must include, on a separate sheet of paper, a statement that they have not, and will not engage in any of the prohibited activities contained in Section 501(c)(3) of the Internal Revenue Code of 1986.

C. Submission of Applications

1. When to Submit (Deadline Date)

Requests for Determination must be submitted by COB on November 22, 2002.

Applications for Standard Projects or Conferences or Workshops must be received by COB on January 31, 2003 (5:00 p.m. Eastern Time). Applications received after this deadline will not be considered for funding.

2. What to Submit

Only a single copy of the Request for Determination (if applicable) is required.

An original and 10 copies of each application must be submitted. In addition, submit 15 copies of the application's Project Summary. All copies of the application and the Project Summary must be submitted in one package.

3. Where To Submit

Applicants must submit via letter or e-mail Requests for Determination to the program contact listed in Part I.D. and in the preamble.

Applicants are strongly encouraged to submit completed applications via overnight mail or delivery service to ensure timely receipt by the CSREES. The address for hand-delivered applications submitted using an express mail or overnight courier service, is:

Outreach and Assistance for Socially Disadvantaged Farmers and Ranchers Competitive Grants Program, c/o Proposal Services Unit, Cooperative State Research, Education, and Extension Service, U.S. Department of Agriculture, Room 1420, Waterfront Centre, 800 9th Street, SW., Washington, DC 20024, *Telephone:* (202) 401–5048.

Applications sent via the U.S. Postal Service must be sent to the following address:

Outreach and Assistance for Socially Disadvantaged Farmers and Ranchers Competitive Grants Program, c/o Proposal Services Unit, Cooperative State Research, Education, and Extension Service, U.S. Department of Agriculture, STOP 2245, 1400 Independence Avenue, SW., Washington, DC 20250–2245.

D. Acknowledgment of Applications

The receipt of all applications will be acknowledged by e-mail. Therefore, applicants are strongly encouraged to provide accurate e-mail addresses, where designated, on the Form CSREES–2002. If the applicant's e-mail address is not indicated, CSREES will acknowledge receipt of the application by letter.

If the applicant does not receive an acknowledgment within 60 days of the submission deadline, please contact the program contact. Once the application has been assigned a proposal number, please cite that number on all future correspondence.

Part IV—Review Process

A. General

Each application will be evaluated in a 2-part process. First, each application will be screened to ensure that it meets the administrative requirements as set forth in this RFA. Second, a number of expert reviewers will conduct a merit review based on the evaluation criteria. The views of the individual reviewers will be used by CSREES to determine which applications will be recommended to the Administrator for funding. Evaluated applications will be ranked based on merit. Final approval for those applications recommended for an award will be made by the Administrator.

Reviewers will be drawn from a number of areas, among them government, universities, community-based organizations, and other pertinent entities. Reviewers will be selected based upon training and experience in relevant scientific, extension, or education fields, or experience in community-based organizations, taking into account the following factors: (a) The level of relevant formal scientific, technical education, or extension experience of the individual, as well as the extent to which the individual is or has been engaged in providing outreach and assistance to disadvantaged groups; (b) the need to include as reviewers experts from various areas of specialization within relevant community-based organizations and/or scientific, education, or extension fields that provide outreach and assistance to disadvantaged groups; (c) the need to include as reviewers other experts (*e.g.*, members of community-based organizations, producers, range or forest managers/operators, and consumers) who can assess relevance of the applications to targeted audiences and to program needs; (d) the need to include as reviewers experts from a variety of organizational types (*e.g.*, colleges, universities, industry, state and Federal agencies, private profit and non-profit organizations) and geographic locations; (e) the need to maintain a balanced composition of reviewers with regard to minority and female representation and age distribution; and (f) the need to include reviewers who can judge the effective usefulness of outreach and assistance programs for socially disadvantaged farmers and ranchers.

B. Evaluation Criteria

The evaluation criteria noted below will be used in reviewing applications submitted in response to this RFA. The points assigned provide an indication of the relative importance of each section and will be used by the reviewers in evaluating the proposals.

1. Standard Project Proposals

(a) Statement of Work and Needs Being Addressed (50 points)

The degree to which the proposed project addresses the major purposes of the OASDFR and the severity and importance of the needs being addressed. The degree to which the statement of work reflects innovative strategies for providing outreach and assistance to socially disadvantaged groups and the potential for achieving project objectives. Reviewers will be examining originality, practicality, and creativity in developing successful solutions to the problems facing the targeted audience. Responsiveness to the need to provide information and assistance on application procedures and bidding protocols to gain entry into USDA programs, farm and financial

management, and other information necessary to enhance participation in USDA and other pertinent programs, conducting successful farming operations, and gaining and maintaining ownership of those operations. Numbers of socially disadvantaged farmers and ranchers that the project intends to assist should be clearly specified. Applications that dovetail or mutually support other on-going related projects are encouraged.

(b) Capabilities of Project Personnel, Institutional Commitment and Collaborations (30 points)

Participating with other agencies, community-based organizations, and other institutions and organizations in undertaking and carrying out such projects often provides a higher level of confidence for project success. Having community involvement and ''ownership'' in such projects provides evidence that the needs are real, important, and will be successfully addressed. As important is the commitment of the applicant institution or organization in terms of experience and competencies of the project director and collaborators, and the availability of personnel and resources to direct and carry out the project.

(c) Internal Project Evaluation Plan and Verification of Outcomes (20 points)

Reviewers will judge applications as to the merits of a ''self-evaluation'' plan, or other means by which the project will be managed, significant outcomes achieved, and the reasonableness of timelines. How the Project Directors might react in recommending changes to processes and procedures as a result of unforeseen early successes or failures will be judged as well. The application should address the capacity to: (i) Assemble, summarize, and present data that verify OASDFR outcomes or impacts, and (ii) deliver project materials and results to socially disadvantaged farmers and ranchers, stakeholders, and other OASDFR project leaders.

2. Conferences and Workshops

(a) Rationale and Justification for the Conference/Workshop (30 points)

The degree to which the applicant makes clear the need to have the conference or workshop. Is the conference appropriately justified? Do the conference topic areas address the goals and objectives of the OASDFR? Are there components that could potentially improve or make more effective the OASDFR?

(b) Expected Outcomes (50 points)

Are the expected outcomes of the conference or workshop appropriate, given the goals and objectives of the OASDFR? Are the speakers and participants appropriate given the topic areas to be explored, the rationale and justification, and the goals and objectives of the OASDFR? Will the results be generally useful to other areas?

(c) Agenda (20 points)

Is the agenda logical and reasonable given the rationale and justification and the expected outcomes?

C. Conflicts of Interest and Confidentiality

During the peer evaluation process, extreme care will be taken to prevent any actual or perceived conflicts of interest that may impact review or evaluation. For the purpose of determining conflicts of interest, the academic and administrative autonomy of an institution shall be determined by reference to the 2002 Higher Education Directory, published by Higher Education Publications, Inc., 6400 Arlington Boulevard, Suite 648, Falls Church, Virginia 22042. Phone: (703) 532–2300. *Web site: http://www.hepinc.com.*

Names of submitting institutions and individuals, as well as application content and peer evaluations, will be kept confidential, except to those involved in the review process, to the extent permitted by law. In addition, the identities of peer reviewers will remain confidential throughout the entire review process. Therefore, the names of the reviewers will not be released to applicants.

Part V—Award Administration

A. General

Within the limit of funds available for such purpose, the awarding official of CSREES shall make grants to those responsible, eligible applicants whose applications are judged most meritorious under the procedures set forth in this RFA. The date specified by the awarding official of CSREES as the effective date of the grant shall be no later than September 30 of the Federal fiscal year in which the project is approved for support and funds are appropriated for such purpose, unless otherwise permitted by law. It should be noted that the project need not be initiated on the grant effective date, but as soon thereafter as practical so that project goals may be attained within the funded project period. All funds granted by CSREES under this RFA shall be expended solely for the purpose for which the funds are granted in accordance with the approved application and budget, the regulations, the terms and conditions of the award, the applicable Federal cost principles, and the Department's assistance regulations (parts 3015, 3016 and 3019 of 7 CFR).

B. Organizational Management Information

Specific management information relating to an applicant shall be submitted on a one-time basis as part of the responsibility determination prior to the award of a grant identified under this RFA, if such information has not been provided previously under this or another CSREES program. CSREES will provide copies of forms recommended for use in fulfilling these requirements as part of the preaward process. Although an applicant may be eligible based on its status as one of these entities, there are factors which may exclude an applicant from receiving Federal financial and nonfinancial assistance and benefits under this program (*e.g.*, debarment or suspension of an individual involved or a determination that an applicant is not responsible based on submitted organizational management information).

C. Award Document and Notice of Award

The grant award document will provide pertinent instructions and information, including at a minimum, the following:

1. Legal name and address of performing organization or institution to whom the Administrator has awarded a grant under the terms of this request for applications;
2. Title of project;
3. Name(s) and institution(s) of PDs chosen to direct and control approved activities;
4. Identifying grant number assigned by the Department;
5. Project period, specifying the amount of time the Department intends to support the project without requiring recompetition for funds;
6. Total amount of Departmental financial assistance approved by the Administrator during the project period;
7. Legal authority(ies) under which the grant is awarded;
8. Appropriate Catalog of Federal Domestic Assistance (CFDA) number;
9. Approved budget plan for categorizing allocable project funds to accomplish the stated purpose of the grant award; and

10. Other information or provisions deemed necessary by CSREES to carry out its respective granting activities or to accomplish the purpose of a particular grant.

Part VI—Additional Information

A. Access to Review Information

Copies of reviews, not including the identity of reviewers, and a summary of the panel comments will be sent to the applicant PD after the review process has been completed.

B. Use of Funds; Changes

1. Delegation of Fiscal Responsibility

Unless the terms and conditions of the grant state otherwise, the grantee may not in whole or in part delegate or transfer to another person, institution, or organization the responsibility for use or expenditure of grant funds.

2. Changes in Project Plans

(a) The permissible changes by the grantee, PD(s), or other key project personnel in the approved project grant shall be limited to changes in methodology, techniques, or other similar aspects of the project to expedite achievement of the project's approved goals. If the grantee or the PD(s) is uncertain as to whether a change complies with this provision, the question must be referred to the Authorized Departmental Officer (ADO) for a final determination. The ADO is the signatory of the award document, not the program contact.

(b) Changes in approved goals or objectives shall be requested by the grantee and approved in writing by the ADO prior to effecting such changes. In no event shall requests for such changes be approved which are outside the scope of the original approved project.

(c) Changes in approved project leadership or the replacement or reassignment of other key project personnel shall be requested by the grantee and approved in writing by the ADO prior to effecting such changes.

(d) Transfers of actual performance of the substantive programmatic work in whole or in part and provisions for payment of funds, whether or not Federal funds are involved, shall be requested by the grantee and approved in writing by the ADO prior to effecting such transfers, unless prescribed otherwise in the terms and conditions of the grant.

(e) *Changes in Project Period:* The project period may be extended by CSREES without additional financial support, for such additional period(s) as the ADO determines may be necessary to complete or fulfill the purposes of an approved project, but in no case shall the total project period exceed five years. Any extension of time shall be conditioned upon prior request by the grantee and approval in writing by the ADO, unless prescribed otherwise in the terms and conditions of a grant.

(f) *Changes in Approved Budget:* Changes in an approved budget must be requested by the grantee and approved in writing by the ADO prior to instituting such changes if the revision will involve transfers or expenditures of amounts requiring prior approval as set forth in the applicable Federal cost principles, Departmental regulations, or grant award.

C. Expected Program Outputs and Reporting Requirements

Funded projects will be expected to verify program accomplishments. Evidence of actual or intended beneficial changes in the degree of ownership by socially disadvantaged farmers and ranchers is particularly desirable, in addition to documentation of producer involvement in program activities. The evidence is expected to include participants' assessment of the value of program outreach and assistance activities and suggestions for improvement. Grantees must prepare annual reports that document significant activities or events that show movement toward achieving goals and objectives of the project. The reports should specify performance targets for that period and contain evidence that verifies the extent to which these targets have been met. Approximately one month after the anniversary start date, an annual report format will be provided to the Project Director. This report will compare accomplishments against stated goals, and highlight those assistance and outreach methods that prove to be highly successful.

D. Applicable Federal Statutes and Regulations

Several Federal statutes and regulations apply to grant applications considered for review and to project grants awarded under this program. These include, but are not limited to:

7 CFR part 1, subpart A—USDA implementation of the Freedom of Information Act.

7 CFR part 3—USDA implementation of OMB Circular No. A–129 regarding debt collection.

7 CFR part 15, subpart A—USDA implementation of Title VI of the Civil Rights Act of 1964, as amended.

7 CFR part 3015—USDA Uniform Federal Assistance Regulations, implementing OMB directives (*i.e.*, OMB Circular Nos. A–21 and A–122) and incorporating provisions of 31 U.S.C. 6301–6308 (formerly the Federal Grant and Cooperative Agreement Act of 1977, Public Law No. 95–224), as well as general policy requirements applicable to recipients of Departmental financial assistance.

7 CFR part 3016—Uniform Administrative Requirements for Grants and Cooperative Agreements to State and Local Governments.

7 CFR part 3017—USDA implementation of Governmentwide Debarment and Suspension (Nonprocurement) and Governmentwide Requirements for Drug-Free Workplace (Grants).

7 CFR part 3018—USDA implementation of Restrictions on Lobbying. Imposes prohibitions and requirements for disclosure and certification related to lobbying on recipients of Federal contracts, grants, cooperative agreements, and loans.

7 CFR part 3019—USDA implementation of OMB Circular A–110, Uniform Administrative Requirements for Grants and Other Agreements With Institutions of Higher Education, Hospitals, and Other Nonprofit Organizations.

7 CFR part 3052—USDA implementation of OMB Circular No. A–133, Audits of States, Local Governments, and Non-profit Organizations.

7 CFR part 3407—CSREES procedures to implement the National Environmental Policy Act of 1969, as amended.

29 U.S.C. 794 (section 504, Rehabilitation Act of 1973) and 7 CFR part 15b (USDA implementation of statute)—prohibiting discrimination based upon physical or mental handicap in Federally assisted programs.

35 U.S.C. 200 *et seq.*—Bayh-Dole Act, controlling allocation of rights to inventions made by employees of small business firms and domestic nonprofit organizations, including universities, in Federally assisted programs (implementing regulations are contained in 37 CFR part 401).

E. Confidential Aspects of Applications and Awards

When an application results in a grant, it becomes a part of the record of CSREES transactions, available to the public upon specific request. Information that the Secretary determines to be of a confidential, privileged, or proprietary nature will be held in confidence to the extent permitted by law. Therefore, any information that the applicant wishes to have considered as confidential, privileged, or proprietary should be

clearly marked within the application. The original copy of an application that does not result in a grant will be retained by the Agency for a period of one year. Other copies will be destroyed. Such an application will be released only with the consent of the applicant or to the extent required by law. An application may be withdrawn at any time prior to the final action thereon.

F. Regulatory Information

For the reasons set forth in the final Rule-related Notice to 7 CFR part 3015, subpart V (48 FR 29114, June 24, 1983), this program is excluded from the scope of the Executive Order 12372 which requires intergovernmental consultation with State and local officials. Under the provisions of the Paperwork Reduction Act of 1995 (44 U.S.C. chapter 35), the collection of information requirements contained in this Notice have been approved under OMB Document No. 0524–0039.

G. Definitions

For the purpose of this program, the following definitions are applicable:

(1) *1890 Land-Grant Colleges* means one of those institutions eligible to receive funds under the Act of August 30, 1890, as amended (7 U.S.C. 321 *et seq.*), including Tuskegee University and West Virginia State College.

(2) *Administrator* means the Administrator of the Cooperative State Research, Education, and Extension Service (CSREES) and any other officer or employee of the Department to whom the authority involved is delegated.

(3) *Agricultural Programs* means those activities established or authorized by: the Agricultural Act of 1949 (7 U.S.C. 1421 *et seq.*); the Consolidated Farm and Rural Development Act (7 U.S.C. 1921 *et seq.*); the Agricultural Adjustment Act of 1938 (7 U.S.C. 1281 *et seq.*); the Soil Conservation Act; the Domestic Allotment Assistance Act; the Food Security Act of 1985; and other such acts as determined by the Administrator, Cooperative State Research, Education, and Extension Service, USDA, on a case-by-case basis either at the Administrator's initiative or in response to a written request with supporting explanation for inclusion of an Act. Covered programs include, but are not limited to, agricultural conservation program, programs comprising the environmental conservation acreage reserve program (ECARP), conservation technical assistance program, emergency conservation program, forestry incentives program, Great Plains Conservation Program, integrated farm management option program, price support and production adjustment program, rural environmental conservation program, soil survey program, water bank program, and the farm loan programs (farm ownership, operating soil and water, and emergency loans).

(4) *Alaska Native* means a citizen of the United States who is a person of one-fourth degree or more Alaska Indian (including Tsimshian Indians not enrolled in the Metlaktla Indian Community), Eskimo, or Aleut blood, or combination thereof. It also includes, in the absence of proof of a minimum blood quantum, any citizen of the United States who is regarded as an Alaska Native by the Native Village or Native group of which he claims to be a member and whose father or mother is (or if deceased, was) regarded as Native by any village or group.

(5) *Alaska Native cooperative colleges* means any post-secondary education institution that at the time of application, has an enrollment of undergraduate students that is at least 20 percent Alaska Native students.

(6) *Assistance* means providing hands-on assistance through workshops, site visits and other means of contact with socially disadvantaged farmers and ranchers to enable them to understand the application process and to apply for or to take advantage of USDA and other relevant and pertinent programs. Assistance is also defined as providing guidance and help in understanding the process and procedures for applying for grants, loans, mortgages, or other financial resources that assist socially disadvantaged farmers and ranchers in gaining ownership of their farming and ranching operations.

(7) *Authorized departmental officer* means the Secretary or any employee of the Department who has the authority to issue or modify grant instruments on behalf of the Secretary.

(8) *Authorized organizational representative* means the president, director, chief executive officer, or other designated official of the applicant organization, who has the authority to commit the resources of the organization.

(9) *Budget period* means the interval of time (usually 12 months) into which the project period is divided for budgetary and reporting purposes.

(10) *Community-based organization* means a nongovernmental organization with a well-defined constituency that includes all or part of a particular community; *e.g.*, communities consisting of socially disadvantaged farmers and ranchers.

(11) *Department* or *USDA* means the United States Department of Agriculture.

(12) *Enrollment of needy students* means an enrollment at an institution with respect to which: (a) At least 50 percent of the degree students so enrolled are receiving need-based Federal financial assistance, including the Federal Work-study Program, in the second year preceding the fiscal year for which the determination is made (other than loans for which an interest subsidy is paid pursuant to 20 U.S.C. 1708); or (b) a substantial percentage of the students so enrolled are receiving Federal Pell Grants in the second fiscal year preceding the fiscal year for which determination is made, compared to the percentage of students receiving Federal Pell Grants at all such institutions in the second fiscal year preceding the fiscal year for which the determination is made.

(13) *Extension activity* means an act or process that delivers science-based knowledge and informal educational programs to people, enabling them to make practical decisions.

(14) *Farmer/Rancher* means an owner and/or operator who has a vested interest in the operation of the farm or ranch.

(15) *Grant* means the award by the Secretary of funds to an eligible organization or individual to assist in meeting the costs of conducting, for the benefit of the public, an identified project which is intended and designed to accomplish the purpose of the program as identified in these guidelines.

(16) *Grantee* means the organization designated in the grant award document as the responsible legal entity to which a grant is awarded.

(17) *Hispanic serving post-secondary educational institution* means a post-secondary educational institution that: (a) At the time of application, has an enrollment of undergraduate full-time equivalent students that is at least 25 percent Hispanic students; and (b) provides assurances that not less than 50 percent of the institution's Hispanic students are low-income individuals.

(18) *Indian Tribe or national tribal organization* means any Indian tribe, band, nation, or other organized group or community, including any Alaska Native village or regional or village corporation as defined in or established pursuant to the Alaska Native Claims Settlement Act (85 Stat. 688) (43 U.S.C. 1601 *et seq.*), which is recognized as eligible for the special programs and services provided by the United States to Indians because of their status as Indians.

(19) *Indian Tribal Community Colleges* means a post-secondary education institution which: (a) Is formally controlled, or has been officially sanctioned, or chartered, by the governing body of an Indian tribe or tribes, except no more than one such institution shall be recognized with respect to any such tribe; and (b) includes an institution listed in the Equity in Educational Land Grant Status Act of 1994, as amended (7 U.S.C. 301 note). The 1994 Land-Grant Institutions are: Bay Mills Community College, Blackfeet Community College, Cankdeska Cikana Community College, College of Menominee Nation, Crownpoint Institute of Technology, D–Q University, Dine Community College, Chief Dullknife Memorial College, Fond Du Lac Tribal and Community College, Fort Belknap College, Fort Berthold Community College, Fort Peck Community College, Haskell Indian Nations University, Institute of American Indian and Alaska Native Culture and Arts Development, Lac Courte Orielles Ojibwa Community College, Leech Lake Tribal College, Little Big Horn College, Little Priest Tribal College, Nebraska Indian Community College, Northwest Indian College, Oglala Lakota College, Salish Kootenai College, Sinte Gleska University, Sisseton Wahpeton Community College, Si Tanka/Huron University, Sitting Bull College, Southwestern Indian Polytechnic Institute, Stone Child College, Turtle Mountain Community College, United Tribes Technical College, and White Earth Tribal and Community College.

(20) *Institution of Higher Education* means an educational institution in any State that (a) Admits as regular students only persons having a certificate of graduation from a school providing secondary education, or the recognized equivalent of such a certificate; (b) is legally authorized within such State to provide a program of education beyond secondary education; (c) provides an educational program for which the institution awards a bachelor's degree or provides not less than a 2-year program that is acceptable for full credit toward such a degree; (d) is a public or other nonprofit institution; and (e) is accredited by a nationally recognized accrediting agency or association, or if not so accredited, is an institution that has been granted preaccreditation status by such an agency or association that has been recognized by the Secretary of Education for the granting of preaccreditation status, and the Secretary of Education has determined that there is satisfactory assurance that the institution will meet the accreditation standards of such an agency or association within a reasonable time.

(21) *Junior or Community College* means an institution of higher education: (a) That admits as regular students persons who are beyond the age of compulsory school attendance in the State in which the institution is located and who have the ability to benefit from the training offered by the institution; (b) that does not provide an educational program for which the institution awards a bachelor's degree (or an equivalent degree); and (c) that (i) provides an educational program for not less than 2 years in duration that is acceptable for full credit toward such a degree; or (ii) offers a 2-year program in engineering, mathematics, or the physical or biological sciences, designed to prepare a student to work as a technician or at the semiprofessional level in engineering, scientific, or other technological fields requiring an understanding and application of basic engineering, scientific, or mathematical principles of knowledge.

(22) *Low-income individual* means an individual from a family whose taxable income for the preceding year did not exceed 150 percent of an amount equal to the poverty level determined using criteria of poverty established by the Bureau of the Census.

(23) *Outreach* means the use of formal and informal educational presentations, materials, website materials, etc. that are designed to inform socially disadvantaged farmers and ranchers about USDA programs, other relevant and pertinent programs, and improvements in farm and ranch management in its many dimensions with the purpose of increasing participation in USDA programs and rates of ownership and operation of farms and ranches by members of socially disadvantaged groups.

(24) *Partnering* means a joint effort among two or more institutions, organizations and/or other entities with the capacity to conduct projects intended and designed to accomplish the purpose of the program.

(25) *Peer review* means an evaluation of a proposed project for scientific or technical quality and relevance performed by experts with the scientific knowledge and technical skills to conduct the proposed work or to give expert advice on the merits of a project.

(26) *Peer review panel* means a group of experts qualified by training and/or experience in particular fields to evaluate eligible proposals in those fields submitted under this RFA.

(27) *Performance target* means expected measurable accomplishments that can be used to document the extent of change brought about by the project.

(28) *Prior approval* means written approval evidencing prior consent by an authorized departmental officer as defined in (7) above.

(29) *Project* means the particular activity within the scope of the program supported by a grant award.

(30) *Project period* means the period, as stated in the award document, during which Federal sponsorship begins and ends.

(31) *Project Director* means the individual responsible for the technical direction and management of the project, as designated by the awardee in the proposal and approved by the Authorized Departmental Officer.

(32) *Secretary* means the Secretary of Agriculture and any other officer or employee of the Department to whom the authority involved is delegated.

(33) *Socially disadvantaged farmer or rancher* means a farmer or rancher who is a member of a socially disadvantaged group.

(34) *Socially disadvantaged group* means a group whose members have been subjected to racial or ethnic prejudices because of their identity as members of a group without regard to their individual qualities. Socially disadvantaged groups include, but are not limited to, African Americans, Native Americans, Alaskan Natives, Hispanics, Asians, and Pacific Islanders. The Secretary will determine on a case-by-case basis whether additional groups qualify under this definition, either at the Secretary's initiative or in response to a written request with supporting explanation.

Done at Washington, DC this 30th day of October, 2002.

Colien Hefferan,

Administrator, Cooperative State Research, Education, and Extension Service.

[FR Doc. 02–28159 Filed 11–5–02; 8:45 am]

BILLING CODE 3410–22–P

DEPARTMENT OF AGRICULTURE

Forest Service

Fuels Management Treatment Within the Main Boulder River Drainage, Big Timber MT, Gallatin National Forest, Sweet Grass County, MT

AGENCY: Forest Service, USDA

ACTION: Notice; intent to prepare environmental impact statement.

SUMMARY: The USDA, Forest Service, will prepare an environmental impact

statement (EIS) to disclose the environmental effects of overstory and understory canopy thinning, prescribed burning, wildlife habitat enhancement, and hazardous fuels reduction located in the Main Boulder River drainage, Gallatin National Forest, Big Timber Ranger District, Sweet Grass County, Montana.

The Gallatin National Forest Land and Resource Management Plan (Forest Plan) provides overall guidance for land management activities, including vegetation, natural fuels and road management, within the area. The proposed actions of overstory and understory canopy thinning, prescribed burning, and hazardous fuels reductions are being considered together because they represent either connected or cumulative actions as defined by the Council on Environmental Quality (40 CFR 1508.25). This EIS will tier to the Gallatin Forest Plan Final EIS (September, 1987) as well as the Absaroka-Beartooth Wilderness Fire Management Guidebook (1993).

DATES: Written comments and suggestions should be received on or before December 6, 2002.

ADDRESSES: Submit written comments and suggestions on the proposed management activities or a request to be placed on the project mailing list to Bill Avey, District Ranger, Big Timber Ranger District, Gallatin National Forest, PO Box 1130, Big Timber, Montana, 59011–1130 (phone 406–932–5155).

SUPPLEMENTARY INFORMATION: A variety of fuel management treatments are proposed on approximately 1000 acres of forested land in the Main Boulder River drainage.

The Gallatin Forest Plan provides the overall guidance for management activities in the potentially affected area through its goals, objectives, standards and guidelines, and management area direction. The primary goals of this project are to: (1) Reduce fuel loadings, where possible, along the corridor, to be more consistent with natural presuppression levels; (2) reduce fire hazard along the river corridor to provide evacuation staging areas and the maximum time possible for public evacuation in the event of a wildfire; and (3) provide maximum fire fighter and public safety. Secondary goals include improving wildlife habitat and improving fire protection in the wildland urban interface located within the Main Boulder River drainage.

The project area consists of approximately 2500 acres of National Forest land located in T3S R12E, T4S R12E, T5S R12XE, and T6S R12E P.M. MT. The majority of the fuels treatments would occur within the Main Boulder River drainage and outside of the Absaroka-Beartooth Wilderness Area.

The Forest Service will consider a range of alternatives. One of these will be the ''no action'' alternative, in which none of the proposed activities would be implemented. Additional alternatives will examine varying levels and locations for the proposed activities in response to issues and other resource values.

The EIS will analyze the direct, indirect, and cumulative environmental effects of the alternatives. Past, present, and projected activities on both private and National Forest lands will be considered, including the effects caused by recent and past harvesting and road construction on public and private lands. The EIS will disclose the analysis of site-specific mitigation measures and their effectiveness.

Public participation is an important part of the analysis, commencing with the initial scoping process (40 CFR 1501.7), which will occur during October 2002. In addition to this initial scoping, the public may visit Forest Service officials at any time during the analysis and prior to the decision. The Forest Service will be seeking information, comments, and assistance from Federal, State, and local agencies and other individuals or organizations who may be interested in or affected by the proposed action. No public meetings are scheduled at this time.

Comments from the public and other agencies will be used in preparation of the Draft EIS. The scoping process will be used to:

1. Identify potential issues.
2. Identify issues to be analyzed in depth.
3. Eliminate insignificant issues or those which have been covered by a relevant previous environmental analysis, such as the Gallatin Forest Plan EIS.
4. Identify alternatives to the proposed action.
5. Identify potential environmental effects of the proposed action and alternatives (*i.e.,* direct, indirect, and cumulative effects.
6. Determine potential cooperating agencies and task assignments.

The Draft EIS is expected to be filed with the Environmental Protection Agency (EPA) and available for public review in October 2004. At that time, the EPA will publish a Notice of Availability of the Draft EIS in the **Federal Register**. The comment period on the Draft EIS will be 45 days from the date the EPA's notice of availability appears in the **Federal Register**. It is very important that those interested in management of the Main Boulder River project area participate at that time. The Final EIS is scheduled to be completed by December 2004.

The Forest Service believes, at this early stage, it is important to give reviewers notice of several court rulings related to public participation in the environmental review process. First, reviewers of draft environmental impact statements must structure their participation in the environmental review of the proposal so that it is meaningful and alerts an agency to the reviewer's position and contentions. *Vermont Yankee Nuclear Power Corp.* v. *NRDC, 435 U.S. 519, 533 (1978).* Also, environmental objections that could be raised at the draft environmental impact statement stage but that are not raised until after completion of the final environmental impact statement may be waived or dismissed by the courts. *City of Angoon* v. *Hodel,* 803 F.2d 1016, 1022 (9th Cir. 1986) and *Wisconsin Heritages, Inc.* v. *Harris,* 490 F. Supp. 1334, 1338 (E.D. Wis. 1980). Because of these court rulings, it is very important that those interested in this proposed action participate by the close of the 30-day scoping comment period so that substantive comments and objections are made available to the Forest Service at a time when it can meaningfully consider them and respond to them in developing issues and alternatives. To assist the Forest Service in identifying and considering issues, comments should be as specific to this proposal as possible. Reviewers may wish to refer to the Council on Environmental Quality Regulations for implementing the procedural provisions of the National Environmental Policy Act at 40 CFR 1503.3 in addressing these points.

I am the responsible official for this environmental impact statement. My address is Big Timber Ranger District, PO Box 1130, Big Timber, MT 59011–1130.

Dated: October 16, 2002.

William Avey,

District Ranger.

[FR Doc. 02–28150 Filed 11–5–02; 8:45 am]

BILLING CODE 3410–11–M

DEPARTMENT OF AGRICULTURE

Forest Service

Columbia County Resource Advisory Committee (RAC)

AGENCY: Forest Service, USDA.

ACTION: Notice of meeting.

SUMMARY: Pursuant to the authorities in the Federal Advisory Committees Act

(Pub. L. 92–463), the Columbia County Resource Advisory Committee (RAC) will meet on November 4, 2002 in Dayton, Washington. The purpose of the meeting is to discuss future RAC actions including the consideration of possible Title II projects under Public Law 106–393, H.R. 2389, the Secure Rural Schools and Community Self-Determination Act of 2000, also called the ''Payments to States''Act.

DATES: The meeting will be held on November 4, 2002 from 6 p.m. to 8 p.m.

ADDRESSES: The meeting will be held at the U.S. Post Office, 202 S. 2nd St., Dayton, Washington.

FOR FURTHER INFORMATION CONTACT: Monte Fujishin, Designated Federal Official, USDA, Umatilla National Forest, Pomeroy Ranger District, 71 West Main Street, Pomeroy, WA 99347. Phone: (509) 843–1891.

SUPPLEMENTARY INFORMATION: This meeting will focus on Title II project proposals. The meeting is open to the public. Public input opportunity will be provided and individuals will have the opportunity to address the committee at the time.

Dated: October 30, 2002.

Monte Fujishin,

Designated Federal Official.

[FR Doc. 02–28137 Filed 11–5–02; 8:45 am]

BILLING CODE 3410–11–M

COMMISSION ON CIVIL RIGHTS

Agenda and Notice of Public Meeting of the California Advisory Committee

Notice is hereby given, pursuant to the provisions of the rules and regulations of the U.S. Commission on Civil Rights, that a planning meeting with briefing of the California Advisory Committee to the Commission will convene at 10 a.m. and adjourn at 3 p.m. on Friday, November 22, 2002, at the Family Center, 3355 Gage Avenue, Huntington Park, California 90255. The Committee will meet with the Huntington Park city officials to discuss the grievance procedure by employees and the complaint process by the citizens of Huntington Park.

Persons desiring additional information, or planning a presentation to the Committee, should contact Philip Montez, Director of the Western Regional Office, 213–894–3437 (TDD 213–894–3435). Hearing-impaired persons who will attend the meeting and require the services of a sign language interpreter should contact the Regional Office at least ten (10) working days before the scheduled date of the meeting.

The meeting will be conducted pursuant to the provisions of the rules and regulations of the Commission.

Dated at Washington, DC, October 31, 2002.

Ivy L. Davis,

Chief, Regional Programs Coordination Unit.

[FR Doc. 02–28191 Filed 11–5–02; 8:45 am]

BILLING CODE 6335–01–P

COMMISSION ON CIVIL RIGHTS

Agenda and Notice of Public Meeting of the Vermont Advisory Committee

Notice is hereby given, pursuant to the provisions of the rules and regulations of the U.S. Commission on Civil Rights, that a planning and town hall meeting of the Vermont Advisory Committee to the Commission will convene at 2 p.m. and recess at 3 p.m. (planning session); reconvening at 3 p.m. and adjourning at 8 p.m. (town hall meeting) on Wednesday, November 20, 2002, at the Contois Auditorium, Burlington City Hall, 149 Church Street, Burlington, Vermont 05401. The Advisory Committee will hold a planning meeting to prepare for future town hall meetings to be held in various regions of the State. The Committee will then hold a town hall meeting with parents, public agency officials, educators, and community leaders to discuss efforts to address racism and harassment of minorities in Vermont public schools and communities.

Persons desiring additional information, or planning a presentation to the Committee, should contact Marc Pentino of the Eastern Regional Office, 202–376–7533 (TDD 202–376–8116). Hearing-impaired persons who will attend the meeting and require the services of a sign language interpreter should contact the Regional Office at least ten (10) working days before the scheduled date of the meeting.

The meeting will be conducted pursuant to the provisions of the rules and regulations of the Commission.

Dated at Washington, DC, October 31, 2002.

Ivy L. Davis,

Chief, Regional Programs Coordination Unit.

[FR Doc. 02–28190 Filed 11–5–02; 8:45 am]

BILLING CODE 6335–01–P

COMMISSION ON CIVIL RIGHTS

Agenda and Notice of Public Meeting of the Wyoming Advisory Committee

Notice is hereby given, pursuant to the provisions of the rules and regulations of the U.S. Commission on Civil Rights, that a symposium of the Wyoming Advisory Committee to the Commission will convene at 1:30 p.m. and adjourn at 8 p.m. on Friday, November 22, 2002, at the Beta House, PO Box 3972, University of Wyoming, Laramie, Wyoming 82071. The Committee will conduct a symposium on education issues affecting minority and at-risk students in the Wyoming public secondary schools.

Persons desiring additional information, or planning a presentation to the Committee, should contact, John Dulles, Director of the Rocky Mountain Regional Office, 303–866–1040 (TDD 303–866–1049). Hearing-impaired persons who will attend the meeting and require the services of a sign language interpreter should contact the Regional Office at least ten (10) working days before the scheduled date of the meeting.

The meeting will be conducted pursuant to the provisions of the rules and regulations of the Commission.

Dated at Washington, DC, October 31, 2002.

Ivy L. Davis,

Chief, Regional Programs Coordination Unit.

[FR Doc. 02–28192 Filed 11–5–02; 8:45 am]

BILLING CODE 6335–01–P

DEPARTMENT OF COMMERCE

Submission for OMB Review; Comment Request

The Department of Commerce has submitted to the Office of Management and Budget (OMB) for clearance the following proposal for collection of information under the provisions of the Paperwork Reduction Act (44 U.S.C. chapter 35).

Agency: National Institute of Standards and Technology (NIST).

Title: NIST Three-Year Generic Request for Customer Service-Related Data Collections.

Form Number(s): None.

OMB Approval Number: 0693–0031.

Type of Review: Regular submission.

Burden Hours: 3,022.

Number of Respondents: 12,000.

Average Hours Per Response: The average response time is expected to be less than 30 minutes; less than 2 minutes for a response card; and 2 hours for focus group participation.

Needs and Uses: NIST conducts surveys, focus groups, and other customer satisfaction/service data collections. The collected information is needed and will be used to determine the kind and the quality of products, services, and information our key

customers want and expect, as well as their satisfaction with and awareness of existing products, services and information.

Affected Public: Business or other for-profit organizations, not-for-profit institutions, and Federal, State, Local, or Tribal government.

Frequency: On occasion.

Respondent's Obligation: Providing the requested survey information is necessary to obtain accurate information regarding customer satisfaction with NIST products, services, and information.

OMB Desk Officer: David Rostker (202) 395–3897.

Copies of the above information collection proposal can be obtained by calling or writing Diana Hynek, Departmental Paperwork Clearance Office (202) 482–0266, Department of Commerce, Room 6625, 14th and Constitution Avenue, NW., Washington, DC 20230 (or via the Internet at *Dhynek@doc.gov*).

Written comments and recommendations for the proposed information collection should be sent within 30 days of publication of this notice to David Rostker, OMB Desk Officer, Room 10202, New Executive Office Building, Washington, DC 20503.

Dated: October 31, 2002.

Gwellnar Banks,

Management Analyst, Office of the Chief Information Officer.

[FR Doc. 02–28135 Filed 11–5–02; 8:45 am]

BILLING CODE 3510–13–P

DEPARTMENT OF COMMERCE

Bureau of the Census

[Docket Number 021028259–2259–01]

Annual Retail Trade Survey

AGENCY: Bureau of the Census, Commerce.

ACTION: Notice of determination.

SUMMARY: The Bureau of the Census (Census Bureau) is conducting the Annual Retail Trade Survey. The Census Bureau has determined that it needs to collect data covering annual sales, e-commerce sales, percent of e-commerce sales to customers located outside the United States, year-end inventories, purchases, accounts receivables, and, for select industries, merchandise line sales, and percent of sales by class of customer. The Census Bureau is collecting this data because the detail provided is not available from any other source and this data provides valuable information for both the government as well as the public and industry.

FOR FURTHER INFORMATION CONTACT: Nancy Piesto, Service Sector Statistics Division, on (301) 763–2747.

SUPPLEMENTARY INFORMATION: The Annual Retail Trade Survey is a continuation of similar retail trade surveys conducted each year since 1951 (except 1954). It provides, on a comparable classification basis, annual sales, e-commerce sales, and purchases for 2002 and year-end inventories for 2001 and 2002. These data are not available publicly on a timely basis from non-governmental or other governmental sources.

The Census Bureau will require a selected sample of firms operating retail establishments in the United States to report in the 2002 Annual Retail Trade Survey. Sales size will determine the probability of a firm's selection; that is, larger firms will have a greater probability of being selected than smaller ones. We will furnish report forms to the firms covered by this survey and will require their submissions within thirty days after receipt. The sample will provide, with measurable reliability, statistics on the subjects specified above.

The Census Bureau is authorized to take surveys necessary to furnish current data on the subjects covered by the major censuses authorized by title 13, United States Code, sections 182, 224, and 225. This survey will provide continuing and timely national statistical data on retail trade for the period between economic censuses. For 2002, the economic census year, the survey will, as it has in the past, operate as a separate sample of retail companies. The data collected in this survey will be similar to that collected in the past and within the general scope and nature of those inquiries covered in the economic census. These data will provide a sound statistical basis for the formation of policy by various government agencies. These data also apply to a variety of public and business needs.

Notwithstanding any other provision of law, no person is required to respond to, nor shall a person be subject to a penalty for failure to comply with, a collection of information subject to the requirements of the Paperwork Reduction Act (PRA) unless that collection of information displays a current valid Office of Management and Budget (OMB) control number. In accordance with the PRA, 44 United States Code, chapter 35, the OMB approved the Annual Retail Trade Survey under OMB Control Number 0607–0013. We will furnish report forms to organizations included in the survey. Additional copies are available on written request to the Director, U.S. Census Bureau, Washington, DC 20233–0101.

Based upon the foregoing, I have directed that an annual survey be conducted for the purpose of collecting these data.

Dated: November 1, 2002.

Charles Louis Kincannon,

Director, Bureau of the Census.

[FR Doc. 02–28186 Filed 11–5–02; 8:45 am]

BILLING CODE 3510–07–P

DEPARTMENT OF COMMERCE

International Trade Administration

[A–549–812]

Furfuryl Alcohol From Thailand: Notice of Rescission of Antidumping Duty Administrative Review

AGENCY: Import Administration, International Trade Administration, Department of Commerce.

ACTION: Notice of rescission of antidumping duty administrative review.

EFFECTIVE DATE: November 6, 2002.

SUMMARY: On August 27, 2002, the Department of Commerce (the Department) published in the **Federal Register** (67 FR 55000) a notice announcing the initiation of an administrative review of the antidumping duty order on furfuryl alcohol from Thailand, covering the period July 1, 2001, through June 30, 2002, and one manufacturer/exporter of the subject merchandise, Indorama Chemicals (Thailand) Ltd. (Indorama). We are now rescinding this review as a result of Indorama's withdrawal of its request for an administrative review.

FOR FURTHER INFORMATION CONTACT: Charles Riggle at (202) 482–0650 or Tisha Loeper-Viti at (202) 482–7425, AD/CVD Enforcement, Office 5, Group II, Import Administration, International Trade Administration, U.S. Department of Commerce, 14th Street and Constitution Avenue, NW, Washington, DC 20230.

SUPPLEMENTARY INFORMATION:

The Applicable Statute and Regulations

Unless otherwise indicated, all citations to the statute are references to the provisions effective January 1, 1995, the effective date of the amendments made to the Tariff Act of 1930 (the Act) by the Uruguay Round Agreements Act (URAA). In addition, unless otherwise indicated, all citations to the

Department's regulations refer to the regulations codified at 19 CFR part 351 (April 2002).

Background

On July 31, 2002, Indorama, in accordance with 19 CFR 351.213(b), requested an administrative review of the antidumping duty order on furfuryl alcohol from Thailand. On August 27, 2002, in accordance with 19 CFR 351.221(c)(1)(i), we initiated an administrative review of this order for the period July 1, 2001, through June 30, 2002 (67 FR 55000). On October 18, 2002, Indorama withdrew its request for this review.

Rescission of Review

The Department's regulations at 19 CFR 351.213(d)(1) provide that the Department will rescind an administrative review if the party that requested the review withdraws its request for review within 90 days of the date of publication of the notice of initiation of the requested review, or withdraws its request at a later date if the Department determines that it is reasonable to extend the time limit for withdrawing the request. Indorama was the only party to request this review and it withdrew its request within the 90-day period. Accordingly, this review is rescinded.

This notice is issued and published in accordance with section 751 of the Act (19 U.S.C. 1675) and 19 CFR 351.213(d)(4).

Dated: October 30, 2002.

Bernard T. Carreau,

Deputy Assistant Secretary for Import Administration.

[FR Doc. 02–28236 Filed 11–5–02; 8:45 am]

BILLING CODE 3510–DS–P

DEPARTMENT OF COMMERCE

Patent and Trademark Office

[Docket No. 2003–C–003]

Performance Review Board (PRB)

AGENCY: Patent and Trademark Office, Commerce.

ACTION: Notice; update membership list of the United States Patent and Trademark Office Performance Review Board.

SUMMARY: In conformance with the Civil Service Reform Act of 1978, 5 U.S.C. 4314(c)(4), the United States Patent and Trademark Office announces the appointment of persons to serve as members of its Performance Review Board.

ADDRESSES: Director, Office of Human Resources, United States Patent and Trademark Office, One Crystal Park, Suite 707, Washington, DC 20231.

FOR FURTHER INFORMATION CONTACT: Sydney Rose at (703) 305–8062.

SUPPLEMENTARY INFORMATION: The membership of the United States Patent and Trademark Office Performance Review Board is as follows:

Jonathan Dudas, Chair, Deputy Under Secretary of Commerce for Intellectual Property and Deputy Director of the United States Patent and Trademark Office, Washington, DC 20231, Term expires September 30, 2005.

Nicholas Godici, Commissioner for Patents, United States Patent and Trademark Office, Washington, DC 20231, Term expires September 30, 2003.

Anne Chasser, Commissioner for Trademarks, United States Patent and Trademark Office, Washington, DC 20231, Term expires September 30, 2003.

Douglas Bourgeois, Chief Information Officer, United States Patent and Trademark Office, Washington, DC 20231, Term expires September 30, 2004.

James Toupin, General Counsel, United States Patent and Trademark Office, Washington, DC 20231, Term expires September 30, 2004.

James Taylor, Director, Office of Financial Management and Deputy Chief Financial Officer, Department of Commerce, Washington, DC 20230, Term expires September 30, 2004.

K. David Holmes, Jr., Associate Under Secretary for Inspection, Department of Transportation, Transportation Security Administration, Washington, DC 20590, Term expires September 30, 2004.

Clarence Crawford, Director of the Office of Executive Resources Management, United States Office of Personnel Management, 1900 E Street, NW, Washington, DC 20415, Term Expires September 30, 2003.

Dated: October 31, 2002.

James E. Rogan,

Under Secretary of Commerce for Intellectual Property and, Director of the United States Patent and Trademark Office.

[FR Doc. 02–28189 Filed 11–5–02; 8:45 am]

BILLING CODE 3510–16–P

COMMITTEE FOR THE IMPLEMENTATION OF TEXTILE AGREEMENTS

Adjustment of Import Limits for Certain Cotton and Man-Made Fiber Textile Products Produced or Manufactured in Pakistan

October 31, 2002.

AGENCY: Committee for the Implementation of Textile Agreements (CITA).

ACTION: Issuing a directive to the Commissioner of Customs adjusting limits.

EFFECTIVE DATE: November 6, 2002.

FOR FURTHER INFORMATION CONTACT: Ross Arnold, International Trade Specialist, Office of Textiles and Apparel, U.S. Department of Commerce, (202) 482–4212. For information on the quota status of these limits, refer to the Quota Status Reports posted on the bulletin boards of each Customs port, call (202) 927–5850, or refer to the U.S. Customs website at http://www.customs.gov. For information on embargoes and quota re-openings, refer to the Office of Textiles and Apparel website at http://otexa.ita.doc.gov.

SUPPLEMENTARY INFORMATION:

Authority: Section 204 of the Agricultural Act of 1956, as amended (7 U.S.C. 1854); Executive Order 11651 of March 3, 1972, as amended.

The current limits for certain categories are being adjusted, variously, for swing, changing donor categories for swing and special swing, and cancelling special shift and special swing.

A description of the textile and apparel categories in terms of HTS numbers is available in the CORRELATION: Textile and Apparel Categories with the Harmonized Tariff Schedule of the United States (see **Federal Register** notice 66 FR 65178, published on December 18, 2001). Also see 66 FR 63683, published on December 10, 2001.

D. Michael Hutchinson,

Acting Chairman, Committee for the Implementation of Textile Agreements.

Committee for the Implementation of Textile Agreements

October 31, 2002.

Commissioner of Customs,

Department of the Treasury, Washington, DC 20229.

Dear Commissioner: This directive amends, but does not cancel, the directive issued to you on December 4, 2001, by the Chairman, Committee for the Implementation of Textile Agreements. That directive concerns imports of certain cotton and man-made fiber textile products produced or

manufactured in Pakistan and exported during the twelve-month period which began on January 1, 2002 and extends through December 31, 2002.

Effective on November 6, 2002, you are directed to adjust the limits for the following categories, as provided for under the Uruguay Round Agreement on Textiles and Clothing:

Category	Twelve-month restraint limit [1]
Specific limits	
219	13,091,616 square meters.
226/313	155,373,925 square meters.
237	355,050 dozen.
239pt. [2]	800,878 kilograms.
315	116,779,952 square meters.
331pt./631pt. [3]	1,059,992 dozen pairs.
335/635	657,825 dozen.
340/640	1,135,072 dozen of which not more than 515,830 dozen shall be in Categories 340–D/640–D [4].
341/641	1,381,384 dozen.
359–C/659–C [5]	1,242,728 kilograms.
625/626/627/628/629	96,051,811 square meters of which not more than 61,068,605 square meters shall be in Category 625; not more than 61,068,605 square meters shall be in Category 626; not more than 61,068,605 square meters shall be in Category 627; not more than 12,634,885 square meters shall be in Category 628; and not more than 61,068,605 square meters shall be in Category 629.

[1] The limits have not been adjusted to account for any imports exported after December 31, 2001.

[2] Category 239pt.: only HTS number 6209.20.5040 (diapers).

[3] Category 331pt.: all HTS numbers except 6116.10.1720, 6116.10.4810, 6116.10.5510, 6116.10.7510, 6116.92.6410, 6116.92.6420, 6116.92.6430, 6116.92.6440, 6116.92.7450, 6116.92.7460, 6116.92.7470, 6116.92.8800, 6116.92.9400 and 6116.99.9510; Category 631pt.: all HTS numbers except 6116.10.1730, 6116.10.4820, 6116.10.5520, 6116.10.7520, 6116.93.8800, 6116.93.9400, 6116.99.4800, 6116.99.5400 and 6116.99.9530.

[4] Category 340–D: only HTS numbers 6205.20.2015, 6205.20.2020, 6205.20.2025 and 6205.20.2030; Category 640–D: only HTS numbers 6205.30.2010, 6205.30.2020, 6205.30.2030, 6205.30.2040, 6205.90.3030 and 6205.90.4030.

[5] Category 359–C: only HTS numbers 6103.42.2025, 6103.49.8034, 6104.62.1020, 6104.69.8010, 6114.20.0048, 6114.20.0052, 6203.42.2010, 6203.42.2090, 6204.62.2010, 6211.32.0010, 6211.32.0025 and 6211.42.0010; Category 659–C: only HTS numbers 6103.23.0055, 6103.43.2020, 6103.43.2025, 6103.49.2000, 6103.49.8038, 6104.63.1020, 6104.63.1030, 6104.69.1000, 6104.69.8014, 6114.30.3044, 6114.30.3054, 6203.43.2010, 6203.43.2090, 6203.49.1010, 6203.49.1090, 6204.63.1510, 6204.69.1010, 6210.10.9010, 6211.33.0010, 6211.33.0017 and 6211.43.0010.

The Committee for the Implementation of Textile Agreements has determined that these actions fall within the foreign affairs exception of the rulemaking provisions of 5 U.S.C. 553(a)(1).

Sincerely,

D. Michael Hutchinson,

Acting Chairman, Committee for the Implementation of Textile Agreements.

[FR Doc.02–28194 Filed 11–5–02; 8:45 am]

BILLING CODE 3510–DR–S

COMMITTEE FOR THE IMPLEMENTATION OF TEXTILE AGREEMENTS

Adjustment of an Import Limit for Certain Cotton and Man-Made Fiber Textile Products Produced or Manufactured in Thailand

October 31, 2002.

AGENCY: Committee for the Implementation of Textile Agreements (CITA).

ACTION: Issuing a directive to the Commissioner of Customs adjusting a limit.

EFFECTIVE DATE: November 6, 2002.

FOR FURTHER INFORMATION CONTACT: Ross Arnold, International Trade Specialist, Office of Textiles and Apparel, U.S. Department of Commerce, (202) 482–4212. For information on the quota status of this limit, refer to the Quota Status Reports posted on the bulletin boards of each Customs port, call (202) 927–5850, or refer to the U.S. Customs website at http://www.customs.gov. For information on embargoes and quota re-openings, refer to the Office of Textiles and Apparel website at http://www.otexa.ita.doc.gov.

SUPPLEMENTARY INFORMATION:

Authority: Section 204 of the Agricultural Act of 1956, as amended (7 U.S.C. 1854); Executive Order 11651 of March 3, 1972, as amended.

The current limit for Categories 351/651 is being increased for swing.

A description of the textile and apparel categories in terms of HTS numbers is available in the CORRELATION: Textile and Apparel Categories with the Harmonized Tariff Schedule of the United States (see **Federal Register** notice 66 FR 65178, published on December 18, 2001). Also see 66 FR 63036, published on December 4, 2001.

D. Michael Hutchinson,

Acting Chairman, Committee for the Implementation of Textile Agreements.

Committee for the Implementation of Textile Agreements

October 31, 2002.

Commissioner of Customs,

Department of the Treasury, Washington, DC 20229.

Dear Commissioner: This directive amends, but does not cancel, the directive issued to you on November 27, 2001, by the Chairman, Committee for the Implementation of Textile Agreements. That directive concerns imports of certain cotton, wool, man-made fiber, silk blend and other vegetable fiber textiles and textile products, produced or manufactured in Thailand and exported during the twelve-month period which began on January 1, 2002 and extends through December 31, 2002.

Effective on November 6, 2002, you are directed to increase the current limit for Categories 351/651 in Group II to 399,933 dozen [1], as provided for under the Uruguay Round Agreement on Textiles and Clothing

The Committee for the Implementation of Textile Agreements has determined that this action falls within the foreign affairs

[1] The limit has not been adjusted to account for any imports exported after December 31, 2001.

exception of the rulemaking provisions of 5 U.S.C. 553(a)(1).

Sincerely,

D. Michael Hutchinson,

Acting Chairman, Committee for the Implementation of Textile Agreements.

[FR Doc. 02–28120 Filed 11–5–02; 8:45 a.m.

BILLING CODE 3510–DR–S

COMMITTEE FOR THE IMPLEMENTATION OF TEXTILE AGREEMENTS

Determination under the African Growth and Opportunity Act (AGOA)

October 31, 2002.

AGENCY: Committee for the Implementation of Textile Agreements (CITA).

ACTION: Determination.

SUMMARY: The Committee for the Implementation of Textile Agreements (CITA) has determined that handloomed fabric and handmade articles made from such handloomed fabric that are produced in and exported from Botswana qualify for preferential treatment under Section 112(a) of the African Growth and Opportunity Act. Therefore, imports of eligible products from Botswana with an appropriate AGOA Visa will qualify for duty-free treatment under the AGOA.

EFFECTIVE DATE: November 18, 2002.

FOR FURTHER INFORMATION CONTACT: Anna Flaaten, International Trade Specialist, Office of Textiles and Apparel, U.S. Department of Commerce, (202) 482-3400.

SUPPLEMENTARY INFORMATION: The African Growth and Opportunity Act (Title I of the Trade and Development Act of 2000, Pub. L. No. 106-2000)(AGOA) provides preferential tariff treatment for imports of certain textile and apparel products of beneficiary sub-Saharan African countries. In a letter to the Commissioner of Customs dated January 18, 2001, the United States Trade Representative directed Customs to require that importers provide an appropriate export visa from a beneficiary sub-Saharan African country to obtain preferential treatment under section 112(a) of the AGOA (66 FR 7837). The first digit of the visa number corresponds to one of 9 groupings of textile and apparel products that are eligible for preferential tariff treatment. Grouping ''9'' is reserved for Handmade, handloomed, or folklore articles.

In Section 2 of Executive Order 13191 of January 17, 2001, CITA is authorized to ''consult with beneficiary sub-Saharan African countries and to determine which, if any, particular textile and apparel goods shall be treated as being handloomed, handmade, or folklore articles'' (66 FR 7272). Consultations were held on October 9, 2002, and CITA has now determined that handloomed fabrics and handmade articles made from such handloomed fabrics produced in and exported from Botswana are eligible for preferential tariff treatment under section 112(a) of the AGOA. In the letter published below, CITA directs the Commissioner of Customs to allow entry of such products of Botswana under Harmonized Tariff Schedule provision 9819.11.27, when accompanied by an appropriate export visa in grouping ''9.''

James C. Leonard III,

Chairman, Committee for the Implementation of Textile Agreements.

Committee for the Implementation of Textile Agreements

October 31, 2002.

Commissioner of Customs,

Department of the Treasury, Washington, DC 20229.

Dear Commissioner: Department of the Treasury, Washington, DC 20229.Dear Commissioner: The Committee for the Implementation of Textiles Agreements (CITA), pursuant to Sections 112(a) of the African Growth and Opportunity Act (Title I of Pub. L. No. 106-200) (AGOA) and Executive Order 13101 of January 17, 2001, has determined that, effective on November 18, 2002 handloomed fabric produced in Botswana and handmade articles produced in Botswana from such handloomed fabric shall be treated as being handloomed, handmade, or folklore articles under the AGOA, and that an export visa issued by the Government of Botswana for Grouping ''9'' is a certification by the Government of Botswana that the article is handloomed, handmade, or folklore. CITA directs you to permit duty-free entry of such articles accompanied by the appropriate visa and entered under heading 9819.11.27 of the Harmonized Tariff Schedule of the United States.

Sincerely,

James C. Leonard III,

Chairman, Committee for the Implementation of Textile Agreements.

[FR Doc. 02–28195 Filed 11–5–02; 8:45 am]

BILLING CODE 3510–DR–S

DEPARTMENT OF DEFENSE

Office of the Secretary

TRICARE; Civilian Health and Medical Program of the Uniformed Services (CHAMPUS); Fiscal Year 2003 Diagnosis Related Group (DRG) Updates

AGENCY: Office of the Secretary, DoD.

ACTION: Notice of DRG revised rates.

SUMMARY: This notice describes the changes made to the TRICARE DRG-based payment system in order to conform to changes made to the Medicare Prospective Payment System (PPS).

It also provides the updated fixed loss cost outlier threshold, cost-to-charge ratios and the Internet address for accessing the updated adjusted standardized amounts and DRG relative weights to be used for FY 2003 under the TRICARE DRG-based payment system.

DATES: The rates, weights and Medicare PPS changes which affect the TRICARE DRG-based payment system contained in this notice are effective for admissions occurring on or after October 1, 2002.

ADDRESSES: TRICARE Management Activity (TMA), Medical Benefits and Reimbursement Systems, 16401 East Centretech Parkway, Aurora, CO 80011–9066.

FOR FURTHER INFORMATION CONTACT: Marty Maxey, Medical Benefits and Reimbursement Systems, TMA, telephone (303) 676–3627.

Questions regarding payment of specific claims under the TRICARE DRG-based payment system should be addressed to the appropriate contractor.

SUPPLEMENTARY INFORMATION: The final rule published on September 1, 1987 (52 FR 32992) set forth the basic procedures used under the CHAMPUS DRG-based payment system. This was subsequently amended by final rules published August 31, 1988 (53 FR 33461), October 21, 1988 (53 FR 41331), December 16, 1988 (53 FR 50515), May 30, 1990 (55 FR 21863), October 22, 1990 (55 FR 42560), and September 10, 1998 (63 FR 48439).

An explicit tenet of these final rules, and one based on the statute authorizing the use of DRGs by TRICARE, is that the TRICARE DRG-based payment system is modeled on the Medicare PPS, and that, whenever practicable, the TRICARE system will follow the same rules that apply to the Medicare PPS. The Centers for Medicare and Medicaid Services (CMS) publishes these changes annually in the **Federal Register** and discusses in detail the impact of the changes.

In addition, this notice updates the rates and weights in accordance with our previous final rules. The actual changes we are making, along with a description of their relationship to the Medicare PPS, are detailed below.

I. Medicare PPS Changes Which Affect the TRICARE DRG-Based Payment System

Following is a discussion of the changes CMS has made to the Medicare PPS that affect the TRICARE DRG-based payment system.

A. DRG Classifications

Under both the Medicare PPS and TRICARE DRG-based payment system, cases are classified into the appropriate DRG by a Grouper program. The Grouper classifies each case into a DRG on the basis of the diagnosis and procedure codes and demographic information (that is, sex, age, and discharge status). The Grouper used for the TRICARE DRG-based payment system is the same as the current Medicare Grouper with two modifications. The TRICARE system has replaced Medicare DRG 435 with two age-based DRGs (900 and 901), and has implemented thirty-four (34) neonatal DRGs in place of Medicare DRGs 385 through 390. For admissions occurring on or after October 1, 2001, DRG 435 has been replaced by DRG 523.

The TRICARE system has replaced DRG 523 with the two age-based DRGs (900 and 901). For admissions occurring on or after October 1, 1995, the CHAMPUS grouper hierarchy logic was changed so the age split (age <29 days) and assignments to MDC 15 occur before assignment of the PreMDC DRGs. This resulted in all neonate tracheostomies and organ transplants to be grouped to MDC 15 and not to DRGs 480–483 or 495. For admissions occurring on or after October 1, 1998, the CHAMPUS grouper hierarchy logic was changed to move DRG 103 to the PreMDC DRGs and to assign patients to PreMDC DRGs 480, 103 and 495 before assignment to MDC 15 DRGs and the neonatal DRGs. For admissions occurring on or after October 1, 2001, DRGs 512 and 513 were added to the PreMDC DRGs, between DRGs 480 and 103 in the TRICARE grouper hierarchy logic.

For FY 2003, CMS will implement classification changes, including surgical hierarchy changes. The TRICARE Grouper will incorporate all changes made to the Medicare Grouper.

B. Wage Index and Medicare Geographic Classification Review Board Guidelines

TRICARE will continue to use the same wage index amounts used for the Medicare PPS. In addition, TRICARE will duplicate all changes with regard to the wage index for specific hospitals that are redesignated by the Medicare Geographic Classification Review Board.

C. Hospital Market Basket

TRICARE will update the adjusted standardized amounts according to the final updated hospital market basket used for the Medicare PPS according to CMS's August 1, 2002, final rule.

D. Outlier Payments

Since TRICARE does not include capital payments in our DRG-based payments, we will use the fixed loss cost outlier threshold calculated by CMS for paying cost outliers in the absence of capital prospective payments. For FY 2003, the fixed loss cost outlier threshold is based on the sum of the applicable DRG-based payment rate plus any amounts payable for IDME plus a fixed dollar amount. Thus, for FY 2003, in order for a case to qualify for cost outlier payments, the costs must exceed the TRICARE DRG base payment rate (wage adjusted) for the DRG plus the IDME payment plus $30,707 (wage adjusted). The marginal cost factor for cost outliers continues to be 80 percent.

E. Blood Clotting Factor

For FY 2003, the updated HCPCS codes and payment rates for blood clotting factors can be found in the TRICARE Reimbursement Manual, Chapter 6, Section 4, which is accessible through the Internet at *http://www.tricare.osd.mil* under the sequential headings TRICARE Beneficiaries, Other Resources, TRICARE Manuals, TRICARE Reimbursement Manual. TRICARE uses the same ICD–9–CM diagnosis codes as CMS for add-on payment for blood clotting factors.

F. Indirect Medical Education (IDME) Adjustment

Passage of The Benefits Improvement and Protection Act (BIPA) of 2000, modified the transition for the IDME adjustment that was first established by the Balanced Budget Act (BBA) of 1997 and revised by the Balanced Budget Refinement Act of 1999. The formula multiplier for the TRICARE IDME adjustment has been revised to 1.02 for FY 2003 and thereafter.

G. National Operating Standard Cost as a Share of Total Costs

The FY 2003 TRICARE National Operating Standard Cost as a Share of Total Costs used in calculating the cost outlier threshold is 0.915.

II. Cost to Charge Ratio

For FY 2003, the cost-to-charge ratio used for the TRICARE DRG-based payment system will be 0.5062, which is increased to 0.5132 to account for bad debts. This shall be used to calculate the adjusted standardized amounts and to calculate cost outlier payments, except for children's hospitals. For children's hospital cost outliers, the cost-to-charge ratio used is 0.5604.

III. Updated Rates and Weights

The updated rates and weights are accessible through the Internet at *http://www.tricare.osd.mil* under the sequential headings TRICARE Provider Information, Rates and Reimbursements, and DRG Information. Table 1 provides the ASA rates and Table 2 provides the DRG weights to be used under the TRICARE DRG-based payment system during FY 2003 and which is a result of the changes described above. The implementing regulations for the TRICARE/CHAMPUS DRG-based payment system are in 32 CFR part 199.

Dated: October 30, 2002.

L.M. Bynum,

Alternate OSD Federal Register Liaison Officer, Department of Defense.

[FR Doc. 02–28108 Filed 11–5–02; 8:45 am]

BILLING CODE 5001–08–M

DEPARTMENT OF DEFENSE

Office of the Secretary

Defense Science Board

AGENCY: Department of Defense.

ACTION: Notice of advisory committee meetings.

SUMMARY: The Defense Science Board will meet in closed session on January 20–30, 2003; May 21–22, 2003; and October 22–23, 2003, at the Pentagon, Arlington, Virginia.

The mission of the Defense Science Board is to advise the Secretary of Defense and the Under Secretary of Defense for Acquisition, Technology & Logistics on scientific and technical matters as they affect the perceived needs of the Department of Defense. At these meetings, the Defense Science Board will discuss interim findings and recommendations resulting from ongoing Task Force activities. The Board will also discuss plans for future consideration of scientific and technical aspects of specific strategies, tactics, and policies as they may affect the U.S. national defense posture and homeland security.

In accordance with Section 10(d) of the Federal Advisory Committee Act, Public Law 92–463, as amended (5 U.S.C. App. II), it has been determined that these Defense Science Board meetings concern matters listed in 5 U.S.C. 552b(c)(1) and that, accordingly,

these meetings will be closed to the public.

Dated: October 30, 2002.

L.M. Bynum,

Alternate OSD Federal Register Liaison Officer, Department of Defense.

[FR Doc. 02–28106 Filed 11–?5–02; 8:45 am]

BILLING CODE 5001–08–M

DEPARTMENT OF DEFENSE

Office of the Secretary

Defense Science Board

AGENCY: Department of Defense.

ACTION: Notice of Advisory Committee meeting.

SUMMARY: The Defense Science Board Task Force on the Smallpox Vaccine Down Select Process will meet in closed session on December 9, 2002, and February 6, 2003, at SAIC, 4001 N. Fairfax Drive, Arlington, VA. The Task Force will perform an independent evaluation of the Department of Defense and Department of Health and Human Services smallpox vaccine candidates.

The mission of the Defense Science Board is to advise the Secretary of Defense and the Under Secretary of Defense for Acquisition, Technology & Logistics on scientific and technical matters as they affect the perceived needs of the Department of Defense. At these meetings, the Task Force will evaluate each of the three smallpox vaccine candidates to include the following type of issues: Choice of cell line and viral strain used; preclinical data in appropriate animal models; review of vaccine production methodology to include rates of production and surge capacity; review of protocols for clinical trials to include adverse reaction rates; review of cost issues as they relate to production of the vaccine; review of critical regulatory, legal, and ethical issues associated with the use of the vaccine; and any other issues that the Task Force feels, based on its experience, are relevant.

In accordance with section 10(d) of the Federal Advisory Committee Act, Pub. L. 92–463, as amended (5 U.S.C. App. II), it has been determined that these Defense Science Board Task Force meetings concern matters listed in 5 U.S.C. 552b(c)(4) and that, accordingly, these meetings will be closed to the public.

Dated: October 30, 2002.

L.M. Bynum,

Alternate OSD Federal Register Liaison Officer, Department of Defense.

[FR Doc. 02–28107 Filed 11–5–02; 8:45 am]

BILLING CODE 5001–08–M

DEPARTMENT OF DEFENSE

Department of the Air Force

Notice of Intent To Prepare an Environmental Impact Statement for Department of Defense Mission Closure at Johnston Atoll Airfield

Pursuant to the National Environmental Policy Act (NEPA) of 1969, as amended (42 United States Code 4321, *et seq.*), the Council on Environmental Quality (CEQ) Regulations for implementing the procedural provisions of NEPA (40 Code of Federal Regulations [CFR] parts 1500–1508), and Air Force policy and procedures (32 CFR 989), Detachment 1 of the 15 Air Base Wing (ABW) intends to prepare an Environmental Impact Statement (EIS) for the DoD mission closure of Johnston Atoll Airfield. Johnston Atoll (JA) is an unincorporated territory (*i.e.*, possession) of the United States located approximately 717 nautical miles southwest of Honolulu, Hawaii, in the central Pacific Ocean. The Air Force and its implementing agent, Detachment 1, 15 ABW currently serves as the host-management agency for JA military missions. After December 31, 2003, no further military mission requirements have been identified for JA.

Detachment 1, 15 ABW will be the lead agency for the EIS. Since Honolulu is the closest population center to this remote Pacific atoll, Detachment 1, 15 ABW will conduct a Public Scoping Meeting, scheduled for November 6, 2002, in Honolulu, Hawaii at Washington Intermediate School, located at 1633 South King Street. The meeting's purpose is to determine the environmental issues and concerns to be analyzed, to solicit comments on the Proposed Action and alternatives, and to solicit input for other alternatives to be considered in the EIS.

The current proposal evaluates four alternatives—(1) No Action; (2) mission closure with declaration of excess to General Services Administration (GSA); (3) mission closure, but retain ownership of JA (do not excess property to GSA); and (4) caretaker status (mothball JA and retain for future missions). The Proposed Action is alternative (2); however, all comments received during the Scoping Meeting will be considered prior to the Air Force making a decision.

For further information concerning the DoD mission closure at JA or alternatives to the proposed action, please contact Ms. Fran Saunders, Chief, Johnston Atoll Program Office, OL–A, Detachment 1, 15 ABW, 200 Vickers Avenue, Bldg 1055, Hickam AFB, HI 96853–5271.

Pamela D. Fitzgerald,

Air Force Federal Register Liaison Officer.

[FR Doc. 02–28208 Filed 11–5–02; 8:45 am]

BILLING CODE 5001–5–P

DEPARTMENT OF DEFENSE

Department of the Navy

Notice of Availability of Government-Owned Invention; Available for Licensing

AGENCY: Department of the Navy, DOD.

ACTION: Notice.

SUMMARY: The invention listed below is assigned to the United States Government as represented by the Secretary of the Navy and is available for licensing by the Department of the Navy. Navy Case No. 83,326, entitled ''Use of Selective Electrodes for Illicit Drugs Analysis in Saliva and Surface Wipes''.

ADDRESSES: Requests for information about the invention cited should be directed to the Naval Research Laboratory, Code 1004, 4555 Overlook Avenue, SW., Washington, DC 20375–5320, and must include the Navy Case number.

FOR FURTHER INFORMATION CONTACT: Catherine M. Cotell, Ph.D., Head, Technology Transfer Office, NRL Code 1004, 4555 Overlook Avenue, SW., Washington, DC 20375–5320, telephone (202) 767–7230. Due to temporary U.S. Postal Service delays, please fax (202) 404–7920, *E-Mail: cotell@nrl.navy.mil* or use courier delivery to expedite response.

(Authority: 35 U.S.C. 207, 37 CFR Part 404)

Dated: October 29, 2002.

R.E. Vincent II,

Lieutenant Commander, Judge Advocate General's Corps, U.S. Navy, Federal Register Liaison Officer.

[FR Doc. 02–28112 Filed 11–5–02; 8:45 am]

BILLING CODE 3810–FF–P

DEPARTMENT OF EDUCATION

Submission for OMB Review; Comment Request

AGENCY: Department of Education

SUMMARY: The Leader, Regulatory Management Group, Office of the Chief Information Officer invites comments on the submission for OMB review as required by the Paperwork Reduction Act of 1995.

DATES: Interested persons are invited to submit comments on or before December 6, 2002.

ADDRESSES: Written comments should be addressed to the Office of Information and Regulatory Affairs, Attention: Karen Lee, Desk Officer, Department of Education, Office of Management and Budget, 725 17th Street, NW., Room 10235, New Executive Office Building, Washington, DC 20503 or should be electronically mailed to the internet address *Karen_F._Lee@omb.eop.gov.*

SUPPLEMENTARY INFORMATION: Section 3506 of the Paperwork Reduction Act of 1995 (44 U.S.C. Chapter 35) requires that the Office of Management and Budget (OMB) provide interested Federal agencies and the public an early opportunity to comment on information collection requests. OMB may amend or waive the requirement for public consultation to the extent that public participation in the approval process would defeat the purpose of the information collection, violate State or Federal law, or substantially interfere with any agency's ability to perform its statutory obligations. The Leader, Regulatory Management Group, Office of the Chief Information Officer, publishes that notice containing proposed information collection requests prior to submission of these requests to OMB. Each proposed information collection, grouped by office, contains the following: (1) Type of review requested, *e.g.* new, revision, extension, existing or reinstatement; (2) Title; (3) Summary of the collection; (4) Description of the need for, and proposed use of, the information; (5) Respondents and frequency of collection; and (6) Reporting and/or Recordkeeping burden. OMB invites public comment.

Dated: November 1, 2002.

John D. Tressler,

Leader, Regulatory Management Group, Office of the Chief Information Officer.

Office of Elementary and Secondary Education

Type of Review: Extension.

Title: Native Hawaiian Education Council.

Frequency: Annually.

Affected Public: Businesses or other for-profit; State, local or Tribal Gov't, SEAs or LEAs.

Reporting and Recordkeeping Hour Burden:

Responses: 100, Burden Hours: 200.

Abstract: The No Child Left Behind Act of 2001 authorized the Secretary of Education to establish a Native Hawaiian Education Council to help coordinate the educational and related services available to Native Hawaiians. The legislation states that the Education Council may consist of no more than 21 members, unless otherwise determined by a majority of the Council. Furthermore, at least 10 members of the Education Council must be Native Hawaiian service providers and 10 members must be Native Hawaiians or Native Hawaiian education consumers. In addition, membership must include a representative of the State of Hawaii Office of Hawaiian Affairs.

Requests for copies of the submission for OMB review; comment request may be accessed from *http://edicsweb.ed.gov,* by selecting the ''Browse Pending Collections'' link and by clicking on link number 2062. When you access the information collection, click on ''Download Attachments '' to view. Written requests for information should be addressed to Vivian Reese, Department of Education, 400 Maryland Avenue, SW., Room 4050, Regional Office Building 3, Washington, DC 20202–4651 or to the e-mail address *vivan.reese@ed.gov.* Requests may also be electronically mailed to the internet address *OCIO_RIMG@ed.gov* or faxed to 202–708–9346. Please specify the complete title of the information collection when making your request.

Comments regarding burden and/or the collection activity requirements should be directed to Kathy Axt at her e-mail address *Kathy.Axt@ed.gov.* Individuals who use a telecommunications device for the deaf (TDD) may call the Federal Information Relay Service (FIRS) at 1–800–877–8339.

[FR Doc. 02–28246 Filed 11–5–02; 8:45 am]

BILLING CODE 4000–01–P

DEPARTMENT OF EDUCATION

Submission for OMB Review; Comment Request

AGENCY: Department of Education

SUMMARY: The Leader, Regulatory Management Group, Office of the Chief Information Officer invites comments on the submission for OMB review as required by the Paperwork Reduction Act of 1995.

DATES: Interested persons are invited to submit comments on or before December 6, 2002.

ADDRESSES: Written comments should be addressed to the Office of Information and Regulatory Affairs, *Attention:* Lauren Wittenberg, Acting Desk Officer, Department of Education, Office of Management and Budget, 725 17th Street, NW., Room 10235, New Executive Office Building, Washington, DC 20503 or should be electronically mailed to the internet address *Lauren_Wittenberg@omb.eop.gov.*

SUPPLEMENTARY INFORMATION: Section 3506 of the Paperwork Reduction Act of 1995 (44 U.S.C. Chapter 35) requires that the Office of Management and Budget (OMB) provide interested Federal agencies and the public an early opportunity to comment on information collection requests. OMB may amend or waive the requirement for public consultation to the extent that public participation in the approval process would defeat the purpose of the information collection, violate State or Federal law, or substantially interfere with any agency's ability to perform its statutory obligations. The Leader, Regulatory Management Group, Office of the Chief Information Officer, publishes that notice containing proposed information collection requests prior to submission of these requests to OMB. Each proposed information collection, grouped by office, contains the following: (1) Type of review requested, *e.g.* new, revision, extension, existing or reinstatement; (2) Title; (3) Summary of the collection; (4) Description of the need for, and proposed use of, the information; (5) Respondents and frequency of collection; and (6) Reporting and/or Recordkeeping burden. OMB invites public comment.

Dated: November 1, 2002.

John D. Tressler,

Leader, Regulatory Information Management, Office of the Chief Information Officer.

Office of Postsecondary Education

Type of Review: Reinstatement, with change, of a previously approved collection for which approval has expired.

Title: FIPSE Comprehensive Program Grant Application.

Frequency: Annually.

Affected Public: Not-for-profit institutions (primary).

Reporting and Recordkeeping Hour Burden:

Responses: 1,650.

Burden Hours: 19,500.

Abstract: The Comprehensive program is a discretionary grant award program of the fund for the Improvement of Postsecondary Education (FIPSE). Applications are submitted in two stages—preliminary and final. The program supports innovative reform projects that hold promise as models for the resolution of important issues and problems in postsecondary education. Grants made under this program are expected to

contribute new information in educational practice that can be shared with others. As its name suggests, the Comprehensive program may support activities in any discipline, program, or student service. Nonprofit institutions and organizations offering postsecondary education programs are eligible applicants. The Comprehensive Program has established a record of meaningful and lasting improvement to access, retention, and quality in postsecondary education.

Requests for copies of the submission for OMB review; comment request may be accessed from *http://edicsweb.ed.gov,* by selecting the ''Browse Pending Collections'' link and by clicking on link number 2177. When you access the information collection, click on ''Download Attachments '' to view. Written requests for information should be addressed to Vivian Reese, Department of Education, 400 Maryland Avenue, SW., Room 4050, Regional Office Building 3, Washington, DC 20202–4651 or to the e-mail address *vivan.reese@ed.gov.* Requests may also be electronically mailed to the internet address *OCIO_RIMG@ed.gov* or faxed to (202) 708–9346. Please specify the complete title of the information collection when making your request.

Comments regarding burden and/or the collection activity requirements should be directed to SCHUBART at (202) 708–9266. Individuals who use a telecommunications device for the deaf (TDD) may call the Federal Information Relay Service (FIRS) at 1–800–877–8339.

[FR Doc. 02–28247 Filed 11–5–02; 8:45 am]

BILLING CODE 4000–01–P

DEPARTMENT OF ENERGY

Federal Energy Regulatory Commission

[Project No. 12287–000]

Notice of Application Accepted for Filing and Soliciting Motions To Intervene, Protests, and Comments

October 31, 2002.

Take notice that the following hydroelectric application has been filed with the Commission and is available for public inspection:

a. *Type of Application*: Preliminary Permit.

b. *Project No.*: 12287–000.

c. *Date filed*: July 5, 2002.

d. *Applicant*: Greybull Valley Irrigation District.

e. *Name of Project*: Stonewall Project.

f. *Location*: On the Wood River, in Park County, Wyoming, utilizing the supply canal of an existing dam owned by the applicant. Part the project is located on land administered by the U.S. Bureau of Land Management.

g. *Filed Pursuant to*: Federal Power Act, 16 U.S.C. §§ 791(a)–825(r).

h. *Applicant Contact*: Mr. Norman L. Preator, Chairman, Greybull Valley Irrigation District, 949 Highway 20 West, P.O. Box 44, Emblem, WY 82422, (307)762–3317.

i. *FERC Contact*: Robert Bell, (202) 502–6062.

j. *Deadline for filing comments, protests, and motions to intervene*: 60 days from the issuance date of this notice.

All documents (original and eight copies) should be filed with: Magalie R. Salas, Secretary, Federal Energy Regulatory Commission, 888 First Street, NE, Washington, DC 20426. Comments, protests, and interventions may be filed electronically via the Internet in lieu of paper; see 18 CFR 385.2001(a)(1)(iii) and the instructions on the Commission's web site under the ''e-Filing'' link. The Commission strongly encourages electronic filings. Please include the project number (P–12287–000) on any comments or motions filed.

The Commission's rules of practice and procedure require all interveners filing documents with the Commission to serve a copy of that document on each person in the official service list for the project. Further, if an intervener files comments or documents with the Commission relating to the merits of an issue that may affect the responsibilities of a particular resource agency, they must also serve a copy of the document on that resource agency.

k. *Description of Project*: The proposed project would consist of: (1) A proposed intake structure from the canal, (2) a proposed 1,500-foot-long penstock, (3) a proposed powerhouse containing one generating unit with an installed capacity of 2.5 MW, (4) a proposed 3-mile-long 15kV transmission line, and (5) appurtenant facilities.

Applicant estimates that the average annual generation would be 2 GWh and would be sold to a local utility.

l. This filing is available for review at the Commission in the Public Reference Room or may be viewed on the Commission's Web site at *http://www.ferc.gov* using the ''FERRIS'' link. Enter the docket number excluding the last three digits in the docket number field to access the document. For assistance, call toll-free 1–866–208–3676 or e-mail *FERCONLINESUPPORT@FERC.GOV*. For TTY, call (202) 502–8659. A copy is also available for inspection and reproduction at the address in item h above.

m. Competing Preliminary Permit—Anyone desiring to file a competing application for preliminary permit for a proposed project must submit the competing application itself, or a notice of intent to file such an application, to the Commission on or before the specified comment date for the particular application (see 18 CFR 4.36). Submission of a timely notice of intent allows an interested person to file the competing preliminary permit application no later than 30 days after the specified comment date for the particular application. A competing preliminary permit application must conform with 18 CFR 4.30(b) and 4.36.

n. Competing Development Application—Any qualified development applicant desiring to file a competing development application must submit to the Commission, on or before a specified comment date for the particular application, either a competing development application or a notice of intent to file such an application. Submission of a timely notice of intent to file a development application allows an interested person to file the competing application no later than 120 days after the specified comment date for the particular application. A competing license application must conform with 18 CFR 4.30(b) and 4.36.

o. Notice of Intent—A notice of intent must specify the exact name, business address, and telephone number of the prospective applicant, and must include an unequivocal statement of intent to submit, if such an application may be filed, either a preliminary permit application or a development application (specify which type of application). A notice of intent must be served on the applicant(s) named in this public notice.

p. Proposed Scope of Studies under Permit—A preliminary permit, if issued, does not authorize construction. The term of the proposed preliminary permit would be 36 months. The work proposed under the preliminary permit would include economic analysis, preparation of preliminary engineering plans, and a study of environmental impacts. Based on the results of these studies, the Applicant would decide whether to proceed with the preparation of a development application to construct and operate the project.

q. Comments, Protests, or Motions to Intervene—Anyone may submit comments, a protest, or a motion to intervene in accordance with the requirements of Rules of Practice and Procedure, 18 CFR 385.210, .211, .214.

In determining the appropriate action to take, the Commission will consider all protests or other comments filed, but only those who file a motion to intervene in accordance with the Commission's Rules may become a party to the proceeding. Any comments, protests, or motions to intervene must be received on or before the specified comment date for the particular application.

r. Filing and Service of Responsive Documents—Any filings must bear in all capital letters the title ''COMMENTS'', ''NOTICE OF INTENT TO FILE COMPETING APPLICATION'', ''COMPETING APPLICATION'', ''PROTEST'', ''MOTION TO INTERVENE'', as applicable, and the Project Number of the particular application to which the filing refers. Any of the above-named documents must be filed by providing the original and the number of copies provided by the Commission's regulations to: The Secretary, Federal Energy Regulatory Commission, 888 First Street, NE, Washington, DC 20426. An additional copy must be sent to Director, Division of Hydropower Administration and Compliance, Federal Energy Regulatory Commission, at the above-mentioned address. A copy of any notice of intent, competing application or motion to intervene must also be served upon each representative of the Applicant specified in the particular application.

s. Agency Comments—Federal, state, and local agencies are invited to file comments on the described application. A copy of the application may be obtained by agencies directly from the Applicant. If an agency does not file comments within the time specified for filing comments, it will be presumed to have no comments. One copy of an agency's comments must also be sent to the Applicant's representatives.

Linwood A. Watson, Jr.,

Deputy Secretary.

[FR Doc. 02–28310 Filed 11–5–02; 8:45 am]

BILLING CODE 6717–01–P

DEPARTMENT OF ENERGY

Federal Energy Regulatory Commission

[Docket No. EL03–22–000]

California Independent System Operator Corporation, California Electricity Oversight Board, Public Utilities Commission of the State of California, and San Diego Gas & Electric Company, Complainants, v. Cabrillo Power I LLC, Respondent; Notice of Complaint

October 31, 2002.

Take notice that on October 30, 2002, the California Independent System Operator Corporation (the ISO), the California Electricity Oversight Board, the Public Utilities Commission of the State of California and San Diego Gas & Electric Company submitted a complaint pursuant to section 206 of the Federal Power Act, 16 U.S.C. 824e, against Cabrillo Power I LLC alleging that certain rates, referred to as the Fixed Option Payments, in the respective reliability must run (RMR) contracts between the ISO and respondent are unjust and unreasonable.

Complainants state that the allegations, facts, and relief requested in this proceeding are identical to those in Docket No. EL02–15–000, except that the complaint filed in that Docket did not include Encina unit number 4, which the ISO had not designated as an RMR unit for 2002. The ISO has indicated that unit number 4 will be designated as an RMR unit for the year 2003. Complainants ask that the Commission set a refund date of January 1, 2003, consolidate this proceeding with Docket No. EL02–15–000, and defer further action pending its decision on exceptions in Docket No. ER98–495–000.

Copies of the complaint were served on respondent and on other interested parties.

Any person desiring to be heard or to protest this filing should file with the Federal Energy Regulatory Commission, 888 First Street, NE., Washington, DC 20426, in accordance with Rules 211 and 214 of the Commission's Rules of Practice and Procedure (18 CFR 385.211 and 385.214). Protests will be considered by the Commission in determining the appropriate action to be taken, but will not serve to make protestants parties to the proceeding. Any person wishing to become a party must file a motion to intervene. The answer to the complaint and all comments, interventions or protests must be filed on or before November 19, 2002. This filing is available for review at the Commission in the Public Reference Room or may be viewed on the Commission's Web site at *http://www.ferc.gov* using the ''FERRIS'' link. Enter the docket number excluding the last three digits in the docket number field to access the document. For assistance, please contact FERC Online Support at *FERCOnlineSupport@ferc.gov* or toll-free at (866)208–3676, or for TTY, contact (202)502–8659. The answer to the complaint, comments, protests and interventions may be filed electronically via the Internet in lieu of paper; *see* 18 CFR 385.2001(a)(1)(iii) and the instructions on the Commission's Web site under the ''e-Filing'' link. The Commission strongly encourages electronic filings.

Linwood A. Watson, Jr.,

Deputy Secretary.

[FR Doc. 02–28305 Filed 11–5–02; 8:45 am]

BILLING CODE 6717–01–P

DEPARTMENT OF ENERGY

Federal Energy Regulatory Commission

[Docket Nos. EC02–23–004, et al.]

Trans-Elect, Inc., et al.; Electric Rate and Corporate Filings

October 29, 2002.

The following filings have been made with the Commission. The filings are listed in ascending order within each docket classification.

1. Trans-Elect, Inc.; Michigan Transco Holding, Limited Partnership, and ER02–320–006, Consumers Energy Company, and Michigan Electric Transmission Company.

[Docket Nos. EC02–23–004]

Take notice that on October 23, 2002, Michigan Electric Transmission Company, LLC submitted the response to Commission's letter issued on September 23, 2002 in the referenced proceedings.

Copies of the transmittal letter included as part of this filing were served on all parties on the Commission's official service list in these proceedings and on all affected state commissions.

Comment date: November 13, 2002.

2. Midwest Independent Transmission System Operator, Inc.

[Docket No. ER03–86–000]

Take notice that on October 24, 2002, the Midwest Independent Transmission System Operator, Inc. (Midwest ISO) tendered for filing proposed revisions to

its Open Access Transmission Tariff (OATT), FERC Electric Tariff, Second Revised Volume No. 1 in order to accommodate the participation of independent transmission companies (ITCs) in the Midwest ISO. The Midwest ISO has requested an effective date of December 23, 2002.

The Midwest ISO has requested waiver of the requirements set forth in 18 CFR 385.2010. The Midwest ISO has electronically served a copy of this filing upon all Midwest ISO Members, Member representatives of Transmission Owners and Non-Transmission Owners, the Midwest ISO Advisory Committee participants, Policy Subcommittee participants, as well as all state commissions within the region. In addition, the filing has been electronically posted on the Midwest ISO's Web site at *www.midwestiso.org* under the heading ''Filings to FERC'' for other interested parties in this matter. The Midwest ISO will provide hard copies to any interested parties upon request.

Comment Date: November 14, 2002.

3. American Electric Power Service Corporation

[Docket No. ER03–87–000]

Take notice that on October 25, 2002, the American Electric Power Service Corporation (AEPSC) tendered for filing an executed Interconnection and Operation Agreement between Appalachian Power Company and Mirant Danville, LLC. The agreement is pursuant to the AEP Companies' Open Access Transmission Service Tariff (OATT) that has been designated as the Operating Companies of the American Electric Power System FERC Electric Tariff Third Revised Volume No. 6, effective July 31, 2001.

AEP requests an effective date of December 23, 2002. A copy of the filing was served upon Mirant Danville and Virginia State Corporation Commission.

Comment Date: November 15, 2002.

4. Cleco Utility Group, Cleco Utility Group, Inc. Docket No. OA97–325–002

[Docket No. OA97–282–002]

Take notice that on October 25, 2002, Cleco Power LLC submitted a filing in compliance with the Federal Regulatory Commission's September 25, 2002 Order.

Comment Date: November 25, 2002.

Standard Paragraph

Any person desiring to intervene or to protest this filing should file with the Federal Energy Regulatory Commission, 888 First Street, NE., Washington, DC 20426, in accordance with Rules 211 and 214 of the Commission's Rules of Practice and Procedure (18 CFR 385.211 and 385.214). Protests will be considered by the Commission in determining the appropriate action to be taken, but will not serve to make protestants parties to the proceeding. Any person wishing to become a party must file a motion to intervene. All such motions or protests should be filed on or before the comment date, and, to the extent applicable, must be served on the applicant and on any other person designated on the official service list. This filing is available for review at the Commission or may be viewed on the Commission's Web site at *http://www.ferc.gov*, using the ''FERRIS'' link. Enter the docket number excluding the last three digits in the docket number filed to access the document. For assistance, call (202) 502–8222 or TTY, (202) 502–8659. Protests and interventions may be filed electronically via the Internet in lieu of paper; *see* 18 CFR 385.2001(a)(1)(iii) and the instructions on the Commission's Web site under the ''e-Filing'' link. The Commission strongly encourages electronic filings.

Linwood A. Watson, Jr.,

Deputy Secretary.

[FR Doc. 02–28303 Filed 11–5–02; 8:45 am]

BILLING CODE 6717–01–P

DEPARTMENT OF ENERGY

Federal Energy Regulatory Commission

[Docket Nos. EG03–9–000, et al.]

Twelvepole Creek, LLC, et al.; Electric Rate and Corporate Filings

October 30, 2002.

The following filings have been made with the Commission. The filings are listed in ascending order within each docket classification.

1. Twelvepole Creek, LLC

[Docket No. EG03–9–000]

Take notice that on October 28, 2002, Twelvepole Creek, LLC (Twelvepole Creek) tendered for filing an application for a new determination of exempt wholesale generator status, pursuant to section 32(a)(1) of the Public Utility Holding Company Act of 1935, as amended, (PUHCA), 15 U.S.C. 79z–5a(a)(1) (2000), and Section 365.8 of the regulations of the Federal Energy Regulatory Commission (Commission), 18 CFR 365.8.

Twelvepole Creek is a Delaware limited liability company that leases and operates an approximately 504–MW electric generating facility located in Wayne County, West Virginia. Twelvepole Creek states that it will be engaged directly, or indirectly through one or more affiliates as defined in Section 2(a)(11)(B) of PUHCA, and exclusively in the business of operating an eligible facility, and selling electric energy at wholesale.

Comment Date: November 20, 2002.

2. Edison Source

[Docket No. ER02–2563–001]

Take notice that on October 3, 2002, Edison Source tendered for filing with the Federal Energy Regulatory Commission (Commission) an amendment to its filing in the above-referenced docket concerning the termination of the PX Participation Agreement with the California Power Exchange Corporation, dated march 17, 1998, and its Addendum, dated March 17, 1998; and withdrawing Edison Source's Standing Request Relating to inter-Scheduling Coordinator Trades, dated June 5, 1998.

Edison Source requests that the above termination and withdrawal became effective October 16, 2002. *Comment Date:* November 12, 2002.

3. MidAmerican Energy Company

[Docket No. ER03–12–001]

Take notice that on October 28, 2002, MidAmerican Energy Company (MidAmerican), filed with the Commission a revised filing of the Electric Transmission Interconnection Agreement between Iowa Public Service Company n/k/a MidAmerican Energy Company, dated March 1, 1991, incorporating the Fifth Amendment to the Agreement, dated June 28, 2002, which was filed on October 3, 2002.

MidAmerican requests an effective date of the later of the effective date of the acceptance of this Agreement by the Commission or the approval of this Agreement, incorporating the Fifth Amendment by the Administrator of the Rural Utilities Service or the successor in interest to the Administrator, if the approval of the Administrator or such successor is required by law. MidAmerican has served a copy of the filing on the Iowa Utilities Board, the Illinois Commerce Commission and the South Dakota Public Utilities Commission. *Comment Date:* November 18, 2002.

4. Liberty Electric Power, LLC

[Docket No. ER03–88–000]

Take notice that on October 28, 2002 Liberty Electric Power, LLC (Liberty) tendered for filing, pursuant to section 205 of the Federal Power Act (16 U.S.C. 824d), and Part 35 of the Federal Energy

Regulatory Commission Rules of Practice and Procedure, a rate schedule for reactive power to be provided to the PJM Interconnection, LLC transmission grid. Liberty requests an effective date of December 1, 2002. *Comment Date:* November 18, 2002.

Standard Paragraph

Any person desiring to intervene or to protest this filing should file with the Federal Energy Regulatory Commission, 888 First Street, NE., Washington, DC 20426, in accordance with Rules 211 and 214 of the Commission's Rules of Practice and Procedure (18 CFR 385.211 and 385.214). Protests will be considered by the Commission in determining the appropriate action to be taken, but will not serve to make protestants parties to the proceeding. Any person wishing to become a party must file a motion to intervene. All such motions or protests should be filed on or before the comment date, and, to the extent applicable, must be served on the applicant and on any other person designated on the official service list. This filing is available for review at the Commission or may be viewed on the Commission's Web site at *http://www.ferc.gov*, using the ''FERRIS'' link. Enter the docket number excluding the last three digits in the docket number filed to access the document. For assistance, call (202) 502–8222 or TTY, (202) 502–8659. Protests and interventions may be filed electronically via the Internet in lieu of paper; *see* 18 CFR 385.2001(a)(1)(iii) and the instructions on the Commission's Web site under the ''e-Filing'' link. The Commission strongly encourages electronic filings.

Linwood A. Watson, Jr.,

Deputy Secretary.

[FR Doc. 02–28304 Filed 11–5–02; 8:45 am]

BILLING CODE 6717–01–P

DEPARTMENT OF ENERGY

Federal Energy Regulatory Commission

[Project No. 12200–000]

Notice of Application Accepted for Filing and Soliciting Motions To Intervene, Protests, and Comments

October 31, 2002.

Take notice that the following hydroelectric application has been filed with the Commission and is available for public inspection:

a. *Type of Application:* Preliminary Permit.

b. *Project No.:* 12200–000.

c. *Date filed:* June 10, 2002.

d. *Applicant:* McKay Hydro, LLC.

e. *Name of Project:* McKay Dam Project.

f. *Location:* On McKay Creek, in Umatilla County, Oregon utilizing the McKay Dam administered by the U.S. Bureau of Reclamation.

g. *Filed Pursuant to:* Federal Power Act, 16 U.S.C. 791(a)–825(r).

h. *Applicant Contact:* Mr. Brent L. Smith, President, Northwest Power Services, Inc., P.O. Box 535, Rigby, ID 83442, (208)745–0834.

i. *FERC Contact:* Robert Bell, (202) 502–6062.

j. *Deadline for filing comments, protests, and motions to intervene:* 60 days from the issuance date of this notice.

All documents (original and eight copies) should be filed with: Magalie R. Salas, Secretary, Federal Energy Regulatory Commission, 888 First Street, NE, Washington, DC 20426. Comments, protests, and interventions may be filed electronically via the Internet in lieu of paper; see 18 CFR 385.2001(a)(1)(iii) and the instructions on the Commission's Web site under the ''e-Filing'' link. The Commission strongly encourages electronic filings. Please include the project number (P–12200–000) on any comments or motions filed.

The Commission's Rules of Practice and Procedure require all interveners filing documents with the Commission to serve a copy of that document on each person in the official service list for the project. Further, if an intervener files comments or documents with the Commission relating to the merits of an issue that may affect the responsibilities of a particular resource agency, they must also serve a copy of the document on that resource agency.

k. *Description of Project:* The proposed project would utilize the existing U.S. Bureau of Reclamation's McKay Dam and would consist of: (1) A proposed intake structure, (2) a proposed 250-foot-long, 48-inch-diameter steel penstock, (3) a proposed powerhouse containing one generating unit having an installed capacity of 1 MW, (4) a proposed 1-mile-long, 25 kV transmission line, and (5) appurtenant facilities.

Applicant estimates that the average annual generation would be 4.56 GWh and would be sold to a local utility.

l. This filing is available for review at the Commission in the Public Reference Room or may be viewed on the Commission's Web site at *http://www.ferc.gov* using the ''FERRIS'' link. Enter the docket number excluding the last three digits in the docket number field to access the document. For assistance, call toll-free 1–866–208–3676 or e-mail FERCONLINESUPPORT@FERC.GOV. For TTY, call (202) 502–8659. A copy is also available for inspection and reproduction at McKay Hydro, LLC, 975 South State Highway, Logan, UT 84321, (435) 752–2580.

m. *Competing Preliminary Permit:* Anyone desiring to file a competing application for preliminary permit for a proposed project must submit the competing application itself, or a notice of intent to file such an application, to the Commission on or before the specified comment date for the particular application (see 18 CFR 4.36). Submission of a timely notice of intent allows an interested person to file the competing preliminary permit application no later than 30 days after the specified comment date for the particular application. A competing preliminary permit application must conform with 18 CFR 4.30(b) and 4.36.

n. *Competing Development Application:* Any qualified development applicant desiring to file a competing development application must submit to the Commission, on or before a specified comment date for the particular application, either a competing development application or a notice of intent to file such an application. Submission of a timely notice of intent to file a development application allows an interested person to file the competing application no later than 120 days after the specified comment date for the particular application. A competing license application must conform with 18 CFR 4.30(b) and 4.36.

o. *Notice of Intent:* A notice of intent must specify the exact name, business address, and telephone number of the prospective applicant, and must include an unequivocal statement of intent to submit, if such an application may be filed, either a preliminary permit application or a development application (specify which type of application). A notice of intent must be served on the applicant(s) named in this public notice.

p. *Proposed Scope of Studies Under Permit:* A preliminary permit, if issued, does not authorize construction. The term of the proposed preliminary permit would be 36 months. The work proposed under the preliminary permit would include economic analysis, preparation of preliminary engineering plans, and a study of environmental impacts. Based on the results of these studies, the Applicant would decide whether to proceed with the preparation

of a development application to construct and operate the project.

q. *Comments, Protests, or Motions to Intervene:* Anyone may submit comments, a protest, or a motion to intervene in accordance with the requirements of Rules of Practice and Procedure, 18 CFR 385.210, 385.211, 385.214. In determining the appropriate action to take, the Commission will consider all protests or other comments filed, but only those who file a motion to intervene in accordance with the Commission's Rules may become a party to the proceeding. Any comments, protests, or motions to intervene must be received on or before the specified comment date for the particular application.

r. *Filing and Service of Responsive Documents:* Any filings must bear in all capital letters the title ''COMMENTS'', ''NOTICE OF INTENT TO FILE COMPETING APPLICATION'', ''COMPETING APPLICATION'', ''PROTEST'', ''MOTION TO INTERVENE'', as applicable, and the Project Number of the particular application to which the filing refers. Any of the above-named documents must be filed by providing the original and the number of copies provided by the Commission's regulations to: The Secretary, Federal Energy Regulatory Commission, 888 First Street, NE, Washington, DC 20426. An additional copy must be sent to Director, Division of Hydropower Administration and Compliance, Federal Energy Regulatory Commission, at the above-mentioned address. A copy of any notice of intent, competing application or motion to intervene must also be served upon each representative of the Applicant specified in the particular application.

s. *Agency Comments:* Federal, state, and local agencies are invited to file comments on the described application. A copy of the application may be obtained by agencies directly from the Applicant. If an agency does not file comments within the time specified for filing comments, it will be presumed to have no comments. One copy of an agency's comments must also be sent to the Applicant's representatives.

Linwood A. Watson, Jr.,

Deputy Secretary.

[FR Doc. 02–28306 Filed 11–5–02; 8:45 am]

BILLING CODE 6717–01–P

DEPARTMENT OF ENERGY

Federal Energy Regulatory Commission

[Project No. 12211–000]

Notice of Application Accepted for Filing and Soliciting Motions To Intervene, Protests, and Comments

October 31, 2002.

Take notice that the following hydroelectric application has been filed with the Commission and is available for public inspection:

a. *Type of Application:* Preliminary Permit.

b. *Project No.:* 12211–000.

c. *Date filed:* June 6, 2002.

d. *Applicant:* Arbuckle Hydro, LLC.

e. *Name of Project:* Arbuckle Dam Project.

f. *Location:* On Rock Creek, in Murray County, Oklahoma utilizing the Arbuckle Dam administered by the U.S. Bureau of Reclamation.

g. *Filed Pursuant to:* Federal Power Act, 16 U.S.C. 791(a)–825(r).

h. *Applicant Contact:* Mr. Brent L. Smith, President, Northwest Power Services, Inc., P.O. Box 535, Rigby, ID 83442, (208)745–0834.

i. *FERC Contact:* Robert Bell, (202) 502–6062.

j. *Deadline for filing comments, protests, and motions to intervene:* 60 days from the issuance date of this notice.

All documents (original and eight copies) should be filed with: Magalie R. Salas, Secretary, Federal Energy Regulatory Commission, 888 First Street, NE, Washington, DC 20426. Comments, protests, and interventions may be filed electronically via the Internet in lieu of paper; see 18 CFR 385.2001(a)(1)(iii) and the instructions on the Commission's Web site under the ''e-Filing'' link. The Commission strongly encourages electronic filings. Please include the project number (P–12211–000) on any comments or motions filed.

The Commission's Rules of Practice and Procedure require all interveners filing documents with the Commission to serve a copy of that document on each person in the official service list for the project. Further, if an intervener files comments or documents with the Commission relating to the merits of an issue that may affect the responsibilities of a particular resource agency, they must also serve a copy of the document on that resource agency.

k. *Description of Project:* The proposed project would utilize the existing U.S. Bureau of Reclamation's Arbuckle Dam and would consist of: (1) A proposed intake structure, (2) a proposed 200-foot-long, 42-inch-diameter steel penstock, (3) a proposed powerhouse containing one generating unit having an installed capacity of 1 MW, (4) a proposed 2-mile-long, 15 kV transmission line, and (5) appurtenant facilities. Applicant estimates that the average annual generation would be 3.5 GWh and would be sold to a local utility.

l. This filing is available for review at the Commission in the Public Reference Room or may be viewed on the Commission's Web site at *http://www.ferc.gov* using the ''FERRIS'' link. Enter the docket number excluding the last three digits in the docket number field to access the document. For assistance, call toll-free 1–866–208–3676 or e-mail *FERCONLINESUPPORT@FERC.COM*. For TTY, call (202) 502–8659. A copy is also available for inspection and reproduction at Arbuckle Hydro, LLC, 975 South State Highway, Logan, UT 84321, (435) 752–2580.

m. *Competing Preliminary Permit:* Anyone desiring to file a competing application for preliminary permit for a proposed project must submit the competing application itself, or a notice of intent to file such an application, to the Commission on or before the specified comment date for the particular application (see 18 CFR 4.36). Submission of a timely notice of intent allows an interested person to file the competing preliminary permit application no later than 30 days after the specified comment date for the particular application. A competing preliminary permit application must conform with 18 CFR 4.30(b) and 4.36.

n. *Competing Development Application:* Any qualified development applicant desiring to file a competing development application must submit to the Commission, on or before a specified comment date for the particular application, either a competing development application or a notice of intent to file such an application. Submission of a timely notice of intent to file a development application allows an interested person to file the competing application no later than 120 days after the specified comment date for the particular application. A competing license application must conform with 18 CFR 4.30(b) and 4.36.

o. *Notice of Intent:* A notice of intent must specify the exact name, business address, and telephone number of the prospective applicant, and must include an unequivocal statement of intent to submit, if such an application may be filed, either a preliminary permit

application or a development application (specify which type of application). A notice of intent must be served on the applicant(s) named in this public notice.

p. *Proposed Scope of Studies under Permit:* A preliminary permit, if issued, does not authorize construction. The term of the proposed preliminary permit would be 36 months. The work proposed under the preliminary permit would include economic analysis, preparation of preliminary engineering plans, and a study of environmental impacts. Based on the results of these studies, the Applicant would decide whether to proceed with the preparation of a development application to construct and operate the project.

q. *Comments, Protests, or Motions to Intervene:* Anyone may submit comments, a protest, or a motion to intervene in accordance with the requirements of Rules of Practice and Procedure, 18 CFR 385.210, 385.211, 385.214. In determining the appropriate action to take, the Commission will consider all protests or other comments filed, but only those who file a motion to intervene in accordance with the Commission's Rules may become a party to the proceeding. Any comments, protests, or motions to intervene must be received on or before the specified comment date for the particular application.

r. *Filing and Service of Responsive Documents:* Any filings must bear in all capital letters the title ''COMMENTS'', ''NOTICE OF INTENT TO FILE COMPETING APPLICATION'', ''COMPETING APPLICATION'', ''PROTEST'', ''MOTION TO INTERVENE'', as applicable, and the Project Number of the particular application to which the filing refers. Any of the above-named documents must be filed by providing the original and the number of copies provided by the Commission's regulations to: The Secretary, Federal Energy Regulatory Commission, 888 First Street, NE, Washington, DC 20426. An additional copy must be sent to Director, Division of Hydropower Administration and Compliance, Federal Energy Regulatory Commission, at the above-mentioned address. A copy of any notice of intent, competing application or motion to intervene must also be served upon each representative of the Applicant specified in the particular application.

s. *Agency Comments:* Federal, state, and local agencies are invited to file comments on the described application. A copy of the application may be obtained by agencies directly from the Applicant. If an agency does not file comments within the time specified for filing comments, it will be presumed to have no comments. One copy of an agency's comments must also be sent to the Applicant's representatives.

Linwood A. Watson, Jr.,

Deputy Secretary.

[FR Doc. 02–28307 Filed 11–5–02; 8:45 am]

BILLING CODE 6717–01–P

DEPARTMENT OF ENERGY

Federal Energy Regulatory Commission

[Project No. 12285–000]

Notice of Application Accepted for Filing and Soliciting Motions To Intervene, Protests, and Comments

October 31, 2002.

Take notice that the following hydroelectric application has been filed with the Commission and is available for public inspection:

a. *Type of Application:* Preliminary Permit.

b. *Project No.:* 12285–000.

c. *Date filed:* July 5, 2002.

d. *Applicant:* Greybull Valley Irrigation District.

e. *Name of Project:* Greybull Valley Dam Project.

f. *Location:* On Roach Gulch, in Park County, Wyoming, utilizing the Greybull Valley Dam owned by the applicant. Part of the project is located on land administered by the U. S. Bureau of Land Management.

g. *Filed Pursuant to:* Federal Power Act, 16 U.S.C. 791(a)–825(r).

h. *Applicant Contact:* Mr. Norman L. Preator, Chairman, Greybull Valley Irrigation District, 949 Highway 20 West, P.O. Box 44, Emblem, WY 82422, (307)762–3317.

i. *FERC Contact:* Robert Bell, (202) 502–6062.

j. *Deadline for filing comments, protests, and motions to intervene:* 60 days from the issuance date of this notice.

All documents (original and eight copies) should be filed with: Magalie R. Salas, Secretary, Federal Energy Regulatory Commission, 888 First Street, NE, Washington, DC 20426. Comments, protests, and interventions may be filed electronically via the Internet in lieu of paper; see 18 CFR 385.2001(a)(1)(iii) and the instructions on the Commission's Web site under the ''e-Filing'' link. The Commission strongly encourages electronic filings. Please include the project number (P–12285–000) on any comments or motions filed.

The Commission's Rules of Practice and Procedure require all interveners filing documents with the Commission to serve a copy of that document on each person in the official service list for the project. Further, if an intervener files comments or documents with the Commission relating to the merits of an issue that may affect the responsibilities of a particular resource agency, they must also serve a copy of the document on that resource agency.

k. *Description of Project:* The proposed project would consist of: (1) An existing 1,320-foot-long, 150 foot-high zoned earthen dam, (2) a reservoir having a surface area of 900 acres and storage capacity of 33,169 acre-feet and normal water surface elevation of 4,953 feet msl, (3) a proposed intake structure, (4) a proposed powerhouse containing two generating units having a total installed capacity of 5 MW, (5) a proposed 3-mile-long 15 kV transmission line, and (6) appurtenant facilities.

Applicant estimates that the average annual generation would be 15 GWh and would be sold to a local utility.

l. This filing is available for review at the Commission in the Public Reference Room or may be viewed on the Commission's Web site at *http://www.ferc.gov* using the ''FERRIS'' link. Enter the docket number excluding the last three digits in the docket number field to access the document. For assistance, call toll-free 1–866–208–3676 or e-mail FERCONLINESUPPORT@FERC.GOV. For TTY, call (202) 502–8659. A copy is also available for inspection and reproduction at the address in item h above.

m. *Competing Preliminary Permit:* Anyone desiring to file a competing application for preliminary permit for a proposed project must submit the competing application itself, or a notice of intent to file such an application, to the Commission on or before the specified comment date for the particular application (see 18 CFR 4.36). Submission of a timely notice of intent allows an interested person to file the competing preliminary permit application no later than 30 days after the specified comment date for the particular application. A competing preliminary permit application must conform with 18 CFR 4.30(b) and 4.36.

n. *Competing Development Application:* Any qualified development applicant desiring to file a competing development application must submit to the Commission, on or before a specified comment date for the particular application, either a competing development application or a notice of intent to file such an application. Submission of a timely

notice of intent to file a development application allows an interested person to file the competing application no later than 120 days after the specified comment date for the particular application. A competing license application must conform with 18 CFR 4.30(b) and 4.36.

o. *Notice of Intent:* A notice of intent must specify the exact name, business address, and telephone number of the prospective applicant, and must include an unequivocal statement of intent to submit, if such an application may be filed, either a preliminary permit application or a development application (specify which type of application). A notice of intent must be served on the applicant(s) named in this public notice.

p. *Proposed Scope of Studies under Permit:* A preliminary permit, if issued, does not authorize construction. The term of the proposed preliminary permit would be 36 months. The work proposed under the preliminary permit would include economic analysis, preparation of preliminary engineering plans, and a study of environmental impacts. Based on the results of these studies, the Applicant would decide whether to proceed with the preparation of a development application to construct and operate the project.

q. *Comments, Protests, or Motions to Intervene:* Anyone may submit comments, a protest, or a motion to intervene in accordance with the requirements of Rules of Practice and Procedure, 18 CFR 385.210, 385.211, 385.214. In determining the appropriate action to take, the Commission will consider all protests or other comments filed, but only those who file a motion to intervene in accordance with the Commission's Rules may become a party to the proceeding. Any comments, protests, or motions to intervene must be received on or before the specified comment date for the particular application.

r. *Filing and Service of Responsive Documents:* Any filings must bear in all capital letters the title ''COMMENTS'', ''NOTICE OF INTENT TO FILE COMPETING APPLICATION'', ''COMPETING APPLICATION'', ''PROTEST'', ''MOTION TO INTERVENE'', as applicable, and the Project Number of the particular application to which the filing refers. Any of the above-named documents must be filed by providing the original and the number of copies provided by the Commission's regulations to: The Secretary, Federal Energy Regulatory Commission, 888 First Street, NE, Washington, DC 20426. An additional copy must be sent to Director, Division of Hydropower Administration and Compliance, Federal Energy Regulatory Commission, at the above-mentioned address. A copy of any notice of intent, competing application or motion to intervene must also be served upon each representative of the Applicant specified in the particular application.

s. *Agency Comments:* Federal, state, and local agencies are invited to file comments on the described application. A copy of the application may be obtained by agencies directly from the Applicant. If an agency does not file comments within the time specified for filing comments, it will be presumed to have no comments. One copy of an agency's comments must also be sent to the Applicant's representatives.

Linwood A. Watson, Jr.,

Deputy Secretary.

[FR Doc. 02–28308 Filed 11–5–02; 8:45 am]

BILLING CODE 6717–01–P

DEPARTMENT OF ENERGY

Federal Energy Regulatory Commission

[Project No. 12286–000]

Notice of Application Accepted for Filing and Soliciting Motions To Intervene, Protests, and Comments

October 31, 2002.

Take notice that the following hydroelectric application has been filed with the Commission and is available for public inspection:

a. *Type of Application*: Preliminary Permit.

b. *Project No.*: 12286–000.

c. *Date filed*: July 5, 2002.

d. *Applicant*: Greybull Valley Irrigation District.

e. *Name of Project*: Greybull Valley Supply Canal Project.

f. *Location*: On the Greybull River, in Park County, Wyoming, utilizing the the supply canal of the existing Greybull Valley Dam owned by the applicant. Part of the project is located on land administered by the U.S. Bureau of Land Management.

g. *Filed Pursuant to*: Federal Power Act, 16 U.S.C. §§ 791(a)–825(r).

h. *Applicant Contact*: Mr. Norman L. Preator, Chairman, Greybull Valley Irrigation District, 949 Highway 20 West, P.O. Box 44, Emblem, WY 82422, (307)762–3317.

i. *FERC Contact*: Robert Bell, (202) 502–6062. j. *Deadline for filing comments, protests, and motions to intervene*: 60 days from the issuance date of this notice.

All documents (original and eight copies) should be filed with: Magalie R. Salas, Secretary, Federal Energy Regulatory Commission, 888 First Street, NE, Washington, DC 20426. Comments, protests, and interventions may be filed electronically via the Internet in lieu of paper; see 18 CFR 385.2001(a)(1)(iii) and the instructions on the Commission's web site under the ''e-Filing'' link. The Commission strongly encourages electronic filings. Please include the project number (P–12286–000) on any comments or motions filed.

The Commission's rules of practice and procedure require all interveners filing documents with the Commission to serve a copy of that document on each person in the official service list for the project. Further, if an intervener files comments or documents with the Commission relating to the merits of an issue that may affect the responsibilities of a particular resource agency, they must also serve a copy of the document on that resource agency.

k. Description of Project: The proposed project would consist of: (1) A proposed intake from the canal, (2) a proposed 500-foot long steel penstock, (3) a proposed powerhouse containing two generating units having a total installed capacity of 5 MW, (4) a proposed 3-mile-long 15 kV transmission line, and (5) appurtenant facilities.

Applicant estimates that the average annual generation would be 7 GWh and would be sold to a local utility.

l. This filing is available for review at the Commission in the Public Reference Room or may be viewed on the Commission's website at *http://www.ferc.gov* using the ''FERRIS'' link. Enter the docket number excluding the last three digits in the docket number field to access the document. For assistance, call toll-free 1–866–208–3676 or e-mail *FERCONLINESUPPORT@FERC.GOV*. For TTY, call (202) 502–8659. A copy is also available for inspection and reproduction at the address in item h above.

m. Competing Preliminary Permit—Anyone desiring to file a competing application for preliminary permit for a proposed project must submit the competing application itself, or a notice of intent to file such an application, to the Commission on or before the specified comment date for the particular application (see 18 CFR 4.36). Submission of a timely notice of intent allows an interested person to file the competing preliminary permit application no later than 30 days after the specified comment date for the particular application. A competing

preliminary permit application must conform with 18 CFR 4.30(b) and 4.36.

n. Competing Development Application—Any qualified development applicant desiring to file a competing development application must submit to the Commission, on or before a specified comment date for the particular application, either a competing development application or a notice of intent to file such an application. Submission of a timely notice of intent to file a development application allows an interested person to file the competing application no later than 120 days after the specified comment date for the particular application. A competing license application must conform with 18 CFR 4.30(b) and 4.36.

o. Notice of Intent—A notice of intent must specify the exact name, business address, and telephone number of the prospective applicant, and must include an unequivocal statement of intent to submit, if such an application may be filed, either a preliminary permit application or a development application (specify which type of application). A notice of intent must be served on the applicant(s) named in this public notice.

p. Proposed Scope of Studies under Permit—A preliminary permit, if issued, does not authorize construction. The term of the proposed preliminary permit would be 36 months. The work proposed under the preliminary permit would include economic analysis, preparation of preliminary engineering plans, and a study of environmental impacts. Based on the results of these studies, the Applicant would decide whether to proceed with the preparation of a development application to construct and operate the project.

q. Comments, Protests, or Motions to Intervene—Anyone may submit comments, a protest, or a motion to intervene in accordance with the requirements of rules of practice and procedure, 18 CFR 385.210, .211, .214. In determining the appropriate action to take, the Commission will consider all protests or other comments filed, but only those who file a motion to intervene in accordance with the Commission's Rules may become a party to the proceeding. Any comments, protests, or motions to intervene must be received on or before the specified comment date for the particular application.

r. Filing and Service of Responsive Documents—Any filings must bear in all capital letters the title ''COMMENTS'', ''NOTICE OF INTENT TO FILE COMPETING APPLICATION'', ''COMPETING APPLICATION'', ''PROTEST'', ''MOTION TO INTERVENE'', as applicable, and the Project Number of the particular application to which the filing refers. Any of the above-named documents must be filed by providing the original and the number of copies provided by the Commission's regulations to: The Secretary, Federal Energy Regulatory Commission, 888 First Street, NE, Washington, DC 20426. An additional copy must be sent to Director, Division of Hydropower Administration and Compliance, Federal Energy Regulatory Commission, at the above-mentioned address. A copy of any notice of intent, competing application or motion to intervene must also be served upon each representative of the Applicant specified in the particular application.

s. Agency Comments—Federal, state, and local agencies are invited to file comments on the described application. A copy of the application may be obtained by agencies directly from the Applicant. If an agency does not file comments within the time specified for filing comments, it will be presumed to have no comments. One copy of an agency's comments must also be sent to the Applicant's representatives.

Linwood A. Watson, Jr.,

Deputy Secretary.

[FR Doc. 02–28309 Filed 11–5–02; 8:45 am]

BILLING CODE 6717–01–P

ENVIRONMENTAL PROTECTION AGENCY

[FRL–7405–3]

Agency Information Collection Activities: Submission for OMB Review; Comment Request; Information Requirements for EPA Worker Protection Standards for Hazardous Waste Operations and Emergency Response

AGENCY: Environmental Protection Agency (EPA).

ACTION: Notice.

SUMMARY: In compliance with the Paperwork Reduction Act (44 U.S.C. 3501 *et seq.*), this document announces that the following Information Collection Request (ICR) has been forwarded to the Office of Management and Budget (OMB) for review and approval: Information Requirements for EPA Worker Protection Standards for Hazardous Waste Operations and Emergency Response, OMB Control No. 2050–0105, expiring October 31, 2002. The ICR describes the nature of the information collection and its expected burden and cost; where appropriate, it includes the actual data collection instrument.

DATES: Comments must be submitted on or before December 6, 2002.

ADDRESSES: Send comments, referencing EPA ICR No. 1420.06 and OMB Control No. 2050–0105, to the following addresses: Susan Auby, U.S. Environmental Protection Agency, Collection Strategies Division (Mail Code 2822T), 1200 Pennsylvania Avenue, NW., Washington, DC 20460–0001; and to Office of Information and Regulatory Affairs, Office of Management and Budget (OMB), Attention: Desk Officer for EPA, 725 17th Street, NW., Washington, DC 20503.

FOR FURTHER INFORMATION CONTACT: For a copy of the ICR contact Susan Auby at EPA by phone at (202) 566–1672, by E-mail at *Auby.Susan@epa.gov*, or download off the Internet at *http://www.epa.gov/icr* and refer to EPA ICR No. 1420.06. For technical questions about the ICR contact Sella M. Burchette, OSWER/OERR/ERTC, 732–321–6726.

SUPPLEMENTARY INFORMATION: Information Requirements for EPA Worker Protection Standards for Hazardous Waste Operations and Emergency Response, OMB Control No. 2050–0105, EPA ICR No. 1426.06, expiring October 31, 2002. This is a request for extension of a currently approved collection.

Abstract: This information collection request (ICR) addresses the information requirements for the U.S. Environmental Protection Agency's (EPA) worker protection standards for hazardous waste operations and emergency response under section 126(f) of the Superfund Amendments and Reauthorization Act of 1986 (SARA). SARA section 126(a) requires the Secretary of Labor to promulgate health and safety standards pursuant to section 6 of the Occupational Safety and Health Act of 1970 (OSH Act), for employees engaged in hazardous waste operations and emergency response. Section 126(b) lists eleven worker protection provisions that the Secretary of Labor was directed to include in the regulation (see attached copy of Section 126 of SARA, PL 99–499). These provisions include preparation of various written programs, plans, and records, monitoring of airborne hazards, training of employees, medical surveillance, and the dissemination of information to employees. Certain aspects of these provisions necessitate the collection of information by employers whose employees are engaged in hazardous

waste operations and emergency response. These final standards do not specify any particular method of information collection. An agency may not conduct or sponsor, and a person is not required to respond to, a collection of information unless it displays a currently valid OMB control number. The OMB control numbers for EPA's regulations are listed in 40 CFR part 9 and 48 CFR chapter 15. The **Federal Register** document required under 5 CFR 1320.8(d), soliciting comments on this collection of information was published on March 21, 2002 (67 FR 13139); no comments were received.

Burden Statement: The annual public reporting and record keeping burden for this collection of information is estimated to average 10.68 hours per response. Burden means the total time, effort, or financial resources expended by persons to generate, maintain, retain, or disclose or provide information to or for a Federal agency. This includes the time needed to review instructions; develop, acquire, install, and utilize technology and systems for the purposes of collecting, validating, and verifying information, processing and maintaining information, and disclosing and providing information; adjust the existing ways to comply with any previously applicable instructions and requirements; train personnel to be able to respond to a collection of information; search data sources; complete and review the collection of information; and transmit or otherwise disclose the information.

Respondents/Affected Entities: State and local workers.

Estimated Number of Respondents: 24,000.

Frequency of Response: Annually.

Estimated Total Annual Hour Burden: 255,427.

Estimated Total Annualized Capital, O&M Cost Burden: $0.

Send comments on the Agency's need for this information, the accuracy of the provided burden estimates, and any suggested methods for minimizing respondent burden, including through the use of automated collection techniques to the addresses listed above. Please refer to EPA ICR No. 1426.06 and OMB Control No. 2050–0105 in any correspondence.

Dated: October 30, 2002.

Sara Hisel-McCoy,

Acting Director, Collection Strategies Division.

[FR Doc. 02–28215 Filed 11–5–02; 8:45 am]

BILLING CODE 6560–50–P

ENVIRONMENTAL PROTECTION AGENCY

[FRL–7405–1]

Interstate Lead Company (ILCO) Superfund Site/Leeds, Alabama; Notice of Proposed Settlement

AGENCY: Environmental Protection Agency.

ACTION: Notice of proposed settlement.

SUMMARY: Under section 122(g) of the Comprehensive Environmental Response, Compensation, and Liability Act (CERCLA), Namco Metals, Inc. (Respondent) entered into a *de minimis* Administrative Order on Consent with the Environmental Protection Agency (EPA), whereby the Respondent, in exchange for the United States' covenant not to sue, agrees to pay EPA $12,464.66 and the ILCO Site Remediation Group $30,516.94 for its share of the past and future response costs, including a premium, for the ILCO Superfund Site located in Leeds, Jefferson County, Alabama. EPA will consider public comments on the proposed settlement for thirty days. EPA may withdraw from or modify the proposed settlement should such comments disclose facts or considerations which indicate the proposed settlement is inappropriate, improper, or inadequate. Copies of the proposed settlement are available from: Ms. Paula V. Batchelor, U.S. Environmental Protection Agency, Region IV, CERCLA Program Services Branch, Waste Management Division, 61 Forsyth Street, SW., Atlanta, Georgia 30303. (404) 562–8887.

Written comment may be submitted to Ms. Brenita Richardson at the above address within 30 days of the date of publication.

Dated: October 21, 2002.

Anita L. Davis,

Acting Chief, CERCLA Program Services Branch, Waste Management Division.

[FR Doc. 02–28213 Filed 11–5–02; 8:45 am]

BILLING CODE 6560–50–P

ENVIRONMENTAL PROTECTION AGENCY

[FRL–7405–2]

Comprehensive Environmental Response, Compensation and Liability Act (CERCLA) or Superfund, Section 104(k)(6); ''Announcement of Implementation of Brownfields Job Training Grants''

AGENCY: Environmental Protection Agency.

ACTION: Notice of an opportunity to provide comments on EPA's draft fiscal year 2003 Brownfields job training grant application guidelines.

SUMMARY: The Environmental Protection Agency (EPA) is interested in obtaining the views of interested stakeholders on a draft of the Agency's fiscal year 2003 Brownfields job training grant application guidelines (FY 03 Job Training Guidelines). EPA will make the draft FY 03 Job Training Guidelines available to the public on the Agency's Web site at *http://www.epa.gov/brownfields*. Interested stakeholders and the public are encouraged to download and review the draft guidelines and provide comments by seven calendar days following the publication date of the federal register notice.

DATES: EPA will post the guidelines on the Agency's Web site on November 6, 2002. Those parties that wish to submit written comments on the draft Brownfields Grants Guidelines must submit their comments to EPA no later than one week (seven calendar days) after the publication of the **Federal Register** notice.

ADDRESSES: To ensure that EPA has adequate time to consider any written comments, the Agency encourages parties to submit their comments to the Agency in electronic format. Electronic comments may be submitted to EPA's Office of Brownfields Cleanup and Redevelopment at *BF.comments@epa.Gov.* Parties wishing to submit their comments via the united States Postal Service should address their comments to: Ms. LaKisha Odom, U.S. Environmental Protection Agency, Office of Brownsfields Cleanup and Redevelopment, MC–5105T, 1200 Pennsylvania Avenue NW., Washington, DC 20460.

FOR FURTHER INFORMATION CONTACT: For additional information, contact EPA's Office of the Brownfields Cleanup and Redevelopment at 202–566–2777.

SUPPLEMENTARY INFORMATION: The FY 03 Job training Guidelines will be issued under section 104(k)(6) of the Comprehensive Environmental Response, Compensation, and Liability Act (CERLA) as amended by the recently enacted Small Business Liability Relief and Brownfields Revitalization Act, PL 107–118 (SBLRBRA). Guidelines for grant programs are exempt from notice and comment requirements under 5 U.S.C. 552(a)(2). However, the Agency has decided that consultation with public stakeholders prior to issuing the final version of the FY 03 Job Training

Guidelines is an appropriate step in effectively implementing SBLRBRA.

All written comments must be received by the Agency no later than seven calendar days from federal notice publication. The Agency will carefully consider written comments received during the public comment period, prior to issuing final Brownfields Job Training Grant Application Guidelines in November, 2002. 2002. However, due to the need to promptly provide the final FY 03 Job Training Guidelines to potential applicants, EPA does not plan to respond in writing to written comments.

Dated: October 24, 2002.

Linda Garczynski,

Director, Office of Brownfields Cleanup and Redevelopment, Office of Solid Waste and Emergency Response.

[FR Doc. 02–28211 Filed 11–5–02; 8:45 am]

BILLING CODE 6560–50–M

ENVIRONMENTAL PROTECTION AGENCY

[OPP–2002–0262; FRL–7275–5]

Endosulfan; Availability of Reregistration Eligibility Decision Documents for Comment

AGENCY: Environmental Protection Agency (EPA).

ACTION: Notice.

SUMMARY: This notice announces availability and starts a 60–day public comment period on the Reregistration Eligibility Decision (RED) document for the pesticide active ingredient endosulfan. The RED represents EPA's formal regulatory assessment of the health and environmental database of the subject chemical and presents the Agency's determination regarding which pesticidal uses are eligible for reregistration.

DATES: Comments, identified by docket ID number OPP–2002–0262, must be received on or before January 6, 2003.

ADDRESSES: Comments may be submitted electronically, by mail, or through hand delivery/courier. Follow the detailed instructions as provided in Unit I. of the **SUPPLEMENTARY INFORMATION.**

FOR FURTHER INFORMATION CONTACT: Stacey Milan, Chemical Review Manager, Special Review and Reregistration Division (7508C), Office of Pesticide Programs, Environmental Protection Agency, 1200 Pennsylvania Ave., NW., Washington, DC 20460–0001; telephone number: (703) 305–2505; e-mail address: milan.stacey@epa.gov.

SUPPLEMENTARY INFORMATION:

I. General Information

A. Does this Action Apply to Me?

This action is directed to the public in general. This action may, however, be of interest to persons who are or may be required to conduct testing of chemical substances under the Federal Insecticide, Fungicide, and Rodenticide Act (FIFRA) or the Federal Food, Drug, and Cosmetic Act (FFDCA); environmental, human health, and agricultural advocates; pesticides users; and members of the public interested in the use of pesticides. Since other entities may also be interested, the Agency has not attempted to describe all the specific entities that may be affected by this action. If you have any questions regarding the applicability of this action to a particular entity, consult the person listed under **FOR FURTHER INFORMATION CONTACT.**

B. How Can I Get Copies of this Document and Other Related Information?

1. *Docket.* EPA has established an official public docket for this action under docket identification (ID) number OPP–2002–0262. The official public docket consists of the documents specifically referenced in this action, any public comments received, and other information related to this action. Although a part of the official docket, the public docket does not include Confidential Business Information (CBI) or other information whose disclosure is restricted by statute. The official public docket is the collection of materials that is available for public viewing at the Public Information and Records Integrity Branch (PIRIB), Rm. 119, Crystal Mall #2, 1921 Jefferson Davis Hwy., Arlington, VA. This docket facility is open from 8:30 a.m. to 4 p.m., Monday through Friday, excluding legal holidays. The docket telephone number is (703) 305–5805.

2. *Electronic access.* You may access this **Federal Register** document electronically through the EPA Internet under the ''**Federal Register**'' listings at http://www.epa.gov/fedrgstr/. To access RED documents and RED fact sheets electronically, go directly to the REDs table on the EPA Office of Pesticide Programs Home Page, at http://www.epa.gov/pesticides/reregistration/status.htm.

An electronic version of the public docket is available through EPA's electronic public docket and comment system, EPA Dockets. You may use EPA Dockets at http://www.epa.gov/edocket/ to submit or view public comments, access the index listing of the contents of the official public docket, and to access those documents in the public docket that are available electronically. Once in the system, select ''search,'' then key in the appropriate docket ID number.

Certain types of information will not be placed in the EPA Dockets. Information claimed as CBI and other information whose disclosure is restricted by statute, which is not included in the official public docket, will not be available for public viewing in EPA's electronic public docket. EPA's policy is that copyrighted material will not be placed in EPA's electronic public docket but will be available only in printed, paper form in the official public docket. To the extent feasible, publicly available docket materials will be made available in EPA's electronic public docket. When a document is selected from the index list in EPA Dockets, the system will identify whether the document is available for viewing in EPA's electronic public docket. Although not all docket materials may be available electronically, you may still access any of the publicly available docket materials through the docket facility identified in Unit I.B.1. EPA intends to work towards providing electronic access to all of the publicly available docket materials through EPA's electronic public docket.

For public commenters, it is important to note that EPA's policy is that public comments, whether submitted electronically or in paper, will be made available for public viewing in EPA's electronic public docket as EPA receives them and without change, unless the comment contains copyrighted material, CBI, or other information whose disclosure is restricted by statute. When EPA identifies a comment containing copyrighted material, EPA will provide a reference to that material in the version of the comment that is placed in EPA's electronic public docket. The entire printed comment, including the copyrighted material, will be available in the public docket.

Public comments submitted on computer disks that are mailed or delivered to the docket will be transferred to EPA's electronic public docket. Public comments that are mailed or delivered to the docket will be scanned and placed in EPA's electronic public docket. Where practical, physical objects will be photographed, and the photograph will be placed in EPA's electronic public docket along with a brief description written by the docket staff.

C. How and To Whom Do I Submit Comments?

You may submit comments electronically, by mail, or through hand delivery/courier. To ensure proper receipt by EPA, identify the appropriate docket ID number in the subject line on the first page of your comment. Please ensure that your comments are submitted within the specified comment period. Comments received after the close of the comment period will be marked ''late.'' EPA is not required to consider these late comments. If you wish to submit CBI or information that is otherwise protected by statute, please follow the instructions in Unit I.D. Do not use EPA Dockets or e-mail to submit CBI or information protected by statute.

1. *Electronically*. If you submit an electronic comment as prescribed in this unit, EPA recommends that you include your name, mailing address, and an e-mail address or other contact information in the body of your comment. Also include this contact information on the outside of any disk or CD ROM you submit, and in any cover letter accompanying the disk or CD ROM. This ensures that you can be identified as the submitter of the comment and allows EPA to contact you in case EPA cannot read your comment due to technical difficulties or needs further information on the substance of your comment. EPA's policy is that EPA will not edit your comment, and any identifying or contact information provided in the body of a comment will be included as part of the comment that is placed in the official public docket, and made available in EPA's electronic public docket. If EPA cannot read your comment due to technical difficulties and cannot contact you for clarification, EPA may not be able to consider your comment.

i. *EPA Dockets*. Your use of EPA's electronic public docket to submit comments to EPA electronically is EPA's preferred method for receiving comments. Go directly to EPA Dockets at http://www.epa.gov/edocket, and follow the online instructions for submitting comments. Once in the system, select ''search,'' and then key in docket ID number OPP–2002–0262. The system is an ''anonymous access'' system, which means EPA will not know your identity, e-mail address, or other contact information unless you provide it in the body of your comment.

ii. *E-mail*. Comments may be sent by e-mail to opp-docket@epa.gov, Attention: Docket ID Number OPP–2002–0262. In contrast to EPA's electronic public docket, EPA's e-mail system is not an ''anonymous access'' system. If you send an e-mail comment directly to the docket without going through EPA's electronic public docket, EPA's e-mail system automatically captures your e-mail address. E-mail addresses that are automatically captured by EPA's e-mail system are included as part of the comment that is placed in the official public docket, and made available in EPA's electronic public docket.

iii. *Disk or CD ROM*. You may submit comments on a disk or CD ROM that you mail to the mailing address identified in Unit I.C.2. These electronic submissions will be accepted in WordPerfect or ASCII file format. Avoid the use of special characters and any form of encryption.

2. *By mail*. Send your comments to: Public Information and Records Integrity Branch (PIRIB) (7502C), Office of Pesticide Programs (OPP), Environmental Protection Agency, 1200 Pennsylvania Ave., NW., Washington, DC 20460–0001, Attention: Docket ID Number OPP–2002–0262.

3. *By hand delivery or courier*. Deliver your comments to: Public Information and Records Integrity Branch (PIRIB), Office of Pesticide Programs (OPP), Environmental Protection Agency, Rm. 119, Crystal Mall #2, 1921 Jefferson Davis Hwy., Arlington, VA, Attention: Docket ID Number OPP–2002–0262. Such deliveries are only accepted during the docket's normal hours of operation as identified in Unit I.B.1.

D. How Should I Submit CBI to the Agency?

Do not submit information that you consider to be CBI electronically through EPA's electronic public docket or by e-mail. You may claim information that you submit to EPA as CBI by marking any part or all of that information as CBI (if you submit CBI on disk or CD ROM, mark the outside of the disk or CD ROM as CBI and then identify electronically within the disk or CD ROM the specific information that is CBI). Information so marked will not be disclosed except in accordance with procedures set forth in 40 CFR part 2.

In addition to one complete version of the comment that includes any information claimed as CBI, a copy of the comment that does not contain the information claimed as CBI must be submitted for inclusion in the public docket and EPA's electronic public docket. If you submit the copy that does not contain CBI on disk or CD ROM, mark the outside of the disk or CD ROM clearly that it does not contain CBI. Information not marked as CBI will be included in the public docket and EPA's electronic public docket without prior notice. If you have any questions about CBI or the procedures for claiming CBI, please consult the person listed under **FOR FURTHER INFORMATION CONTACT**.

E. What Should I Consider as I Prepare My Comments for EPA?

You may find the following suggestions helpful for preparing your comments:

1. Explain your views as clearly as possible.
2. Describe any assumptions that you used.
3. Provide copies of any technical information and/or data you used that support your views.
4. If you estimate potential burden or costs, explain how you arrived at the estimate that you provide.
5. Provide specific examples to illustrate your concerns.
6. Offer alternative ways to improve the notice or collection activity.
7. Make sure to submit your comments by the deadline in this document.
8. To ensure proper receipt by EPA, be sure to identify the docket ID number assigned to this action in the subject line on the first page of your response. You may also provide the name, date, and **Federal Register** citation.

II. Background

A. What Action Is the Agency Taking?

The Agency has issued a RED for the pesticide active ingredient endosulfan. Under the Federal Insecticide, Fungicide, and Rodenticide Act (FIFRA), as amended in 1988, EPA is conducting an accelerated reregistration program to reevaluate existing pesticides to make sure they meet current scientific and regulatory standards. The database to support the reregistration of endosulfan is substantially complete, and the Agency has identified risk mitigation measures that if adopted by the registrants will address the human health and ecological risks associated with the current uses of endosulfan. Additional mitigation measures for ecological risk may be warranted following the completion of a stakeholder process, which will be conducted to address environmental risks to especially vulnerable aquatic organisms. In addition, EPA is reevaluating existing pesticides and reassessing tolerances under the Food Quality Protection Act (FQPA) of 1996. The tolerances for those food uses that will remain, following mitigation identified in the RED, have been found to meet the FQPA Safety Standard.

All registrants of pesticide products containing endosulfan will be sent the

appropriate RED, and in order to be reregistered, the risk concerns identified in the RED must be adequately addressed, including appropriate labeling changes. Further, the registrants must comply with product specific label requirements pending Office of Management and Budget (OMB) approval of the endosulfan Data-Call-In.

The reregistration program is being conducted under Congressionally mandated timeframes, and EPA recognizes the need both to make timely reregistration decisions and to involve the public. Therefore, EPA is issuing the endosulfan RED as a final document with a 60–day comment period. Although the 60–day public comment period does not affect the registrant's response due date, it is intended to provide an opportunity for public input and a mechanism for identifying any necessary amendments to the RED. All comments will be carefully considered by the Agency. If any comment significantly affects the endosulfan RED, EPA will amend the RED by publishing the amendment in the **Federal Register**.

B. What is the Agency's Authority for Taking this Action?

The legal authority for this RED falls under FIFRA, as amended in 1988 and 1996. Section 4(g)(2)(A) of FIFRA directs that, after submission of all data concerning a pesticide active ingredient, ''the Administrator shall determine whether pesticides containing such active ingredient are eligible for reregistration,'' before calling in product specific data on individual end-use products, and either reregistering products or taking ''other appropriate regulatory action.''

List of Subjects

Environmental protection, Chemicals, Pesticides and pests.

Dated: October 30, 2002.

Betty Shackleford,

Acting Director, Special Review and Reregistration Division, Office of Pesticide Programs.

[FR Doc. 02–28216 Filed 11–5–02; 8:45 am]

BILLING CODE 6560–50–S

ENVIRONMENTAL PROTECTION AGENCY

[FRL–7404–9]

Koppers Charleston Superfund Site; Notice To Rescind Federal Register Notice Dated October 1, 2002

AGENCY: Environmental Protection Agency.

ACTION: Notice to rescind previous Federal Register notice.

SUMMARY: On October 1, 2002 at 67 FR 61624, the Environmental Protection Agency (EPA) published a Notice of Proposed Settlement for response costs incurred by EPA at the Koppers Charleston Superfund Site located in Charleston, Charleston County, South Carolina. That notice was published prematurely. The purpose of this notice is to rescind EPA's October 1, 2002 **Federal Register** Notice regarding the settlement of response costs at the Site. The Notice of Proposed Settlement for the Site may be republished in the future following final approval of the settlement.

FOR FURTHER INFORMATION CONTACT: Paula Batchelor at 404–562–8887.

Dated: October 23, 2002.

Anita L. Davis,

Acting Chief, CERCLA Program Services Branch, Waste Management Division.

[FR Doc. 02–28214 Filed 11–5–02; 8:45 am]

BILLING CODE 6560–50–P

FEDERAL COMMUNICATIONS COMMISSION

[WC Docket No. 02–214; FCC 02–297]

Application by Verizon Virginia Inc., Verizon Long Distance Virginia, Inc., Verizon Enterprise Solutions Virginia Inc., Verizon Global Networks Inc., and Verizon Select Services of Virginia Inc., Pursuant to Section 271 of the Telecommunications Act of 1996, For Provision of In-Region, InterLATA Services in the State of Virginia

AGENCY: Federal Communications Commission.

ACTION: Notice.

SUMMARY: In this document, the Federal Communications Commission grants the section 271 application of Verizon Virginia Inc., *et al.* (Verizon) for authority to enter the interLATA telecommunications market in the state of Virginia. The Commission grants Verizon's application based on its conclusion that Verizon has satisfied all of the statutory requirements for entry, and opened its local exchange markets to full competition.

DATES: Effective November 8, 2002.

FOR FURTHER INFORMATION CONTACT: Uzoma Onyeije, Attorney-Advisor, Wireline Competition Bureau, at (202) 418–7827 or via the Internet at *uonyeije@fcc.gov.* The complete text of this Memorandum Opinion and Order is available for inspection and copying during normal business hours in the FCC Reference Information Center, Portals II, 445 12th Street, SW, Room CY–A257, Washington, DC 20554. Further information may also be obtained by calling the Common Carrier Bureau's TTY number: (202) 418–0484.

SUPPLEMENTARY INFORMATION: This is a summary of the Commission's Memorandum Opinion and Order (MO&O) in WC Docket No. 02–214, FCC 02–297, adopted October 30, 2002, and released October 30, 2002. This full text may be purchased from the Commission's duplicating contractor, Qualex International, Portals II, 445 12th Street, SW, Room CY-B402, Washington, DC 20554, telephone 202–863–2893, facsimile 202–863–2898, or via e-mail *qualexint@aol.com.* It is also available on the Commission's website at *http://www.fcc.gov/Bureaus/Wireline_Competition/in-region—applications.*

Synopsis of the Order

1. *History of the Application.* On August 1, 2002, Verizon filed an application pursuant to section 271 of the Telecommunications Act of 1996, with the Commission to provide in-region, interLATA service originating in the state of Virginia. Interested parties filed comments on August 21, 2002, and reply comments on September 12, 2002.

2. *The State Commission's Evaluation.* On March 15, 2002, Verizon made a compliance filing for section 271 approval with the Virginia Commission. On July 12, 2002, the Virginia Hearing Examiner issued a report recommending that the Virginia Commission ''advise the FCC that this Commission supports granting Verizon authority to provide in-region interLATA services in Virginia.'' On August 1, 2002, the Virginia Commission forwarded the Virginia Hearing Examiner's Report to this Commission, reporting on the Virginia Hearing Examiner's section 271 proceeding and urging the Commission to consider his recommendations and findings.

3. The *Department of Justice's Evaluation.* The Department of Justice filed its evaluation on September 5, 2002, concluding that Verizon has generally succeeded in opening its markets to competition in most respects. Accordingly, the Department of Justice recommends approval of Verizon's application for section 271 authority in Virginia.

4. *Compliance with Section 271(c)(1)(A).* The Commission concludes that Verizon demonstrates that it satisfies the requirements of section 271(c)(1)(A) based on the interconnection agreements it has

implemented with competing carriers in Virginia. The record demonstrates that competitive LECs serve business and residential customers using predominantly their own facilities and represents an ''actual commercial alternative'' to Verizon in the state of Virginia.

Primary Issues in Dispute

5. *State Consultation.* The Commission finds that the Virginia Hearing Examiner's Report constitutes the Virginia Commission's consultation pursuant to section 271(d)(2)(B). In previous section 271 orders, the Commission has noted that the weight assigned to a state's consultative report is affected by the procedures that the state commission follows to render its report. Consistent with that, the Commission will accord some weight to the Virginia Hearing Examiner's Report, recognizing that the Virginia Commission established evidentiary procedures that provided an opportunity for parties to participate in hearings and offer comments.

6. *Virginia Arbitration Proceeding.* WorldCom challenges this application based, in large part, on issues arising from the *Virginia Arbitration Order.* WorldCom argues that Verizon is in non-compliance with section 271 because Verizon does not have interconnection agreements in Virginia that fully comply with the Act; Verizon's application was not complete when filed because Verizon had not memorialized the agreements required by the *Virginia Arbitration Order* prior to its filing of its section 271 application; and Verizon is not operationally ready to implement the decisions of the *Virginia Arbitration Order.* The *Virginia Arbitration Order* was released on July 17, 2002, and the parties to that proceeding have had the opportunity to review the Bureau's decision and to seek reconsideration of any items in dispute. Interested parties were also able to review the Bureau's decisions and familiarize themselves with the new offerings Verizon was required to make available in Virginia. For these reasons, the Commission finds that the circumstances present in this instance warrant waiver of our procedural requirements, and allow consideration of Verizon's finalized interconnection agreements.

7. *Checklist Item 2—Unbundled Network Elements.* Based on the record, we find that Verizon's Virginia UNE rates are just, reasonable, and nondiscriminatory as required by section 251(c)(3), and are based on cost plus a reasonable profit as required by section 252(d)(1). Thus, Verizon's Virginia UNE rates satisfy checklist item 2. The Commission has previously held that it will not conduct a *de novo* review of a state's pricing determinations and will reject an application only if either ''basic TELRIC principles are violated or the state commission make clear errors in the actual findings on matters so substantial that the end result falls outside the range that a reasonable application of TELRIC principles would produce.''

8. The Commission finds that, while we have serious concerns as to whether the recurring rates established by the Virginia Commission in its state rate proceeding are TELRIC-compliant, Verizon's current recurring UNE rates in Virginia pass a benchmark comparison to New York UNE rates. The Commission confirms that it performs its benchmark analysis by aggregating non-loop rate elements. Although concerns were raised regarding Verizon's switching rate structure, the record does not support a finding that the Virginia Commission committed any clear error. Further, we reject challenges to Verizon's Virginia non-recurring charges and conclude that these rates also fall within the range of rates that a reasonable application of TELRIC principles would produce. Thus, we conclude that Verizon's Virginia UNE rates satisfy the requirements of checklist item 2.

9. *Checklist Item 4—Unbundled Local Loops.* Verizon demonstrates that it provides unbundled local loops in accordance with the requirements of section 271 and our rules, in that it provides ''local loop transmission from the central office to the customer's premises, unbundled from local switching or other services.'' More specifically, Verizon establishes that it provides access to loop make-up information in compliance with the *UNE Remand Order* and nondiscriminatory access to stand alone xDSL-capable loops and high-capacity loops. Also, Verizon provides voice grade loops, both as new loops and through hot-cut conversions, in a nondiscriminatory manner. Finally, Verizon has demonstrated that it has a line-sharing and line-splitting provisioning process that affords competitors nondiscriminatory access to these facilities.

12. *Checklist Item 8—White Pages.* Section 271(c)(2)(b)(viii) requires a BOC to provide ''white page directory listings for customers of the other carrier's telephone exchange service.'' A number of parties contend that Verizon does not provide directory listings to competing carriers with the same accuracy and reliability that it provides its own customers. Specifically, commenters argue that Verizon processing errors lead to lost and incorrect directory listings and that the listing verification process that Verizon has put in place in Virginia is inconsistent with the demands of section 271. The Commission concludes that Verizon provides sufficient tools and training for competitive LECs to review and correct errors in their directory listings prior to publication. In addition, it appears that the system modifications and processing changes have substantially increased the accuracy of the listings and significantly reduced the number of pre-production errors. Accordingly, the Commission finds that Verizon satisfies the requirements of checklist item 8.

Other Checklist Items

13. *Checklist Item 1—Interconnection.* Based on the evidence in the record, the Commission concludes that Verizon provides access and interconnection on terms and conditions that are just, reasonable and nondiscriminatory, in accordance with the requirements of section 251(c)(2) and as specified in section 271, and applied in the Commission's prior orders. Pursuant to this checklist item, Verizon must allow other carriers to interconnect their networks to its network for the mutual exchange of traffic, using any available method of interconnection at any available point in Verizon's network. Verizon's performance generally satisfies the applicable benchmark or retail comparison standards for this checklist item.

14. *Checklist Item 5—Unbundled Local Transport.* A BOC must demonstrate that it provides nondiscriminatory access to network elements in a manner that allows requesting carriers to combine such elements and that the BOC does not separate already-combined elements, except at the specific request of the competitive carrier. Based upon the evidence in the record, the Commission concludes that Verizon has demonstrated that it provides nondiscriminatory access to network element combinations as required by the Act and its rules.

15. *Checklist Item 6—Unbundled Local Switching.* Section 271(c)(2)(B)(vi) of the Act requires that a BOC provide ''[l]ocal switching unbundled from transport, local loop transmission, or other services.'' Based on the record in this proceeding, the Commission concludes that Verizon has demonstrated that it satisfies the requirements of this checklist item in Virginia.

16. *Checklist Item 7—911/E911 Access Services.* Section 271(c)(2)(B)(vii) of the Act requires a BOC to provide ''[n]on-discriminatory access to * * * E911 services.'' Based on the record before it, the Commission concludes that Verizon has demonstrated that it provides nondiscriminatory access to E911 services and databases using the same checklist-compliant processes and procedures that it uses in its section 271-approved states.

17. *Checklist Item 11—Number Portability.* Section 271(c)(2)(B) of the Act requires a BOC to comply with the number portability regulations adopted by the Commission pursuant to section 251. Section 251(b)(2) requires all LECs ''to provide, to the extent technically feasible, number portability in accordance with requirements prescribed by the Commission.'' Based on the evidence in the record, it concludes that Verizon complies with the requirements of checklist item 11.

18. *Remaining Checklist Items—3, 9, 10, 12, 13, and 14.* In addition to showing that it is in compliance with the requirements discussed above, an applicant under section 271 must demonstrate that it complies with checklist item 3 (access to poles, ducts, and conduits), item 9 (numbering administration), item 10 (databases and associated signaling), item 12 (local dialing parity), item 13 (reciprocal compensation), and item 14 (resale). Based on the evidence in the record, the Commission concludes that Verizon demonstrates that it is in compliance with checklist items 3, 9, 10, 12, 13, and 14, in Virginia.

19. *Section 272 Compliance.* Based on the record, Verizon provides evidence that it maintains the same structural separation and nondiscrimination safeguards in Virginia as it does in New Jersey, Connecticut, Maine, Pennsylvania, Rhode Island, Vermont, New York, Connecticut, and Massachusetts—where Verizon has already received section 271 authority. Therefore, the Commission concludes that Verizon has demonstrated that it is in compliance with the requirements of section 272.

20. *Public Interest Analysis.* The Commission concludes that approval of this application is consistent with the public interest. From its extensive review of the competitive checklist, which embodies the critical elements of market entry under the Act, the Commission finds that barriers to competitive entry in Virginia's local exchange market have been removed, and that the local exchange market is open to competition. It further finds that the record confirms the Commission's view that BOC entry into the long distance market will benefit consumers and competition if the relevant local exchange market is open to competition consistent with the competitive checklist.

21. *Section 271(d)(6) Enforcement Authority.* Working with Virginia Commission, the Commission intends to closely monitor Verizon's post-approval compliance to ensure that Verizon continues to meet the conditions required for section 271 approval. It stands ready to exercise its various statutory enforcement powers quickly and decisively in appropriate circumstances to ensure that the local market remains open in each of the states.

Federal Communications Commission.

Marlene H. Dortch,

Secretary.

[FR Doc. 02–28163 Filed 11–5–02; 8:45 am]

BILLING CODE 6712–01–P

FEDERAL COMMUNICATIONS COMMISSION

Network Reliability and Interoperability Council; Meeting

ACTION: Notice of public meeting.

SUMMARY: In accordance with the Federal Advisory Committee Act, this notice advises interested persons of the third meeting of the Network Reliability and Interoperability Council VI (Council) under its charter renewed as of December 26, 2001. The meetings will be held at the Federal Communications Commission in Washington, DC.

DATES: Friday, December 6, 2002 from 10 a.m. to 1 p.m.

ADDRESSES: Federal Communications Commission, 445 12th St. SW., Room TW–C305, Washington, DC.

FOR FURTHER INFORMATION CONTACT: Jeffery Goldthorp at 202–418–1096 or TTY 202–418–2989

SUPPLEMENTARY INFORMATION: The Council was established by the Federal Communications Commission to bring together leaders of the telecommunications industry and telecommunications experts from academic, consumer and other organizations to explore and recommend measures that will enhance network reliability, network security, and network integrity. The Council will discuss the progress of working groups that are addressing the topics that are contained in the Council's charter and any additional issues that may come before it. Members of the general public may attend the meeting. The Federal Communications Commission will attempt to accommodate as many people as possible. Admittance, however, will be limited to the seating available. The public may submit written comments before the meeting to Jeffery Goldthorp, the Commission's Designated Federal Officer for the Network Reliability and Interoperability Council, by e-mail (*jgoldtho@fcc.gov*) or U.S. mail (7–A325, 445 12th St. SW., Washington, DC 20554). Real Audio and streaming video access to the meeting will be available at *http://www.fcc.gov/.*

Federal Communications Commission.

Marlene H. Dortch,

Secretary.

[FR Doc. 02–28164 Filed 11–5–02; 8:45 am]

BILLING CODE 6712–01–P

FEDERAL COMMUNICATIONS COMMISSION

Technological Advisory Council

ACTION: Notice of public meeting.

SUMMARY: In accordance with the Federal Advisory Committee Act, Public Law 92–463, as amended, this notice advises interested persons of the seventh meeting of the Technological Advisory Council (''Council'') under its new charter.

DATES: Wednesday, December 4, 2002 beginning at 10 a.m. and concluding at 3 p.m.

ADDRESSES: Federal Communications Commission, 445 12th St. SW., Room TW–C305 Washington, DC 20554.

SUPPLEMENTARY INFORMATION: Continuously accelerating technological changes in telecommunications design, manufacturing, and deployment require that the Commission be promptly informed of those changes to fulfill its statutory mandate effectively. The Council was established by the Federal Communications Commission to provide a means by which a diverse array of recognized technical experts from different areas such as manufacturing, academia, communications services providers, the research community, etc., can provide advice to the FCC on innovation in the communications industry. The purpose of, and agenda for, the seventh meeting under the Council's new charter will be to review the progress that has been made and further direct the Council's efforts to fulfill its responsibilities under its charter. The Council will also consider such questions as the

Commission may put before it. Members of the public may attend the meeting. The Federal Communications Commission will attempt to accommodate as many persons as possible. Admittance, however, will be limited to the seating available. Unless so requested by the Council's Chair, there will be no public oral participation, but the public may submit written comments to Jeffery Goldthorp, the Federal Communications Commission's Designated Federal Officer for the Technological Advisory Council, before the meeting. Mr. Goldthorp's e-mail address is *jgoldtho@fcc.gov*. His United States mail delivery address is Jeffery Goldthorp, Chief, Network Technology Division, Office of Engineering and Technology, Federal Communications Commission, 445 12th Street, SW., Washington, DC 20554.

Federal Communications Commission.

Marlene H. Dortch,

Secretary.

[FR Doc. 02–28165 Filed 11–5–02; 8:45 am]

BILLING CODE 6712–01–P

FEDERAL COMMUNICATIONS COMMISSION

Sunshine Act Meeting; Open Commission Meeting; Thursday, November 7, 2002

October 31, 2002.

The Federal Communications Commission will hold an Open Meeting on the subjects listed below on Thursday, November 7, 2002, which is scheduled to commence at 9:30 a.m. in Room TW–C305, at 445 12th Street, SW., Washington, DC.

Item, Bureau, and Subject

1—International: The International Bureau will report on the outcome of the International Telecommunication Union Plenipotentiary Conference.

2—Wireless Telecommunications:

Title: Amendment of the Commission's Rules Regarding Dedicated Short-Range Communication Services in the 5.850–5.925 GHz Band (WT Docket No. 01–90); Amendment of Parts 2 and 90 of the Commission's Rules to Allocate the 5.850–5.925 GHz Band to the Mobile Service for Dedicated Short Range Communications of Intelligent Transportation Services.

Summary: The Commission will consider a Notice of Proposed Rulemaking and Order concerning allocation and service rules for the Dedicated Short-Range Communication Services in the 5.850–5.925 GHz Band.

3—Media:

Title: Review of the Commission's Broadcast and Cable Equal Employment Opportunity Rules and Policies (MM Docket No. 98–204).

Summary: The Commission will consider a Second Report and Order concerning new broadcast and MVPD equal employment opportunity rules and policies.

4—Office of Engineering and Technology:

Title: Amendment of Part 2 of the A Commission's Rules to Allocate Spectrum Below 3 GHz for Mobile and Fixed Services to Support the Introduction of New Advanced Wireless Services, including Third Generation Wireless Systems (ET Docket No. 00–258).

Summary: The Commission will consider a Second Report and Order that would allocate spectrum in the 1.7 and 2.1 GHz bands that can be used to provide advanced wireless services (AWS), such as those services commonly identified as ''3G'' or ''IMT–2000.''

5—Wireless Telecommunications:

Title: Service Rules for Advanced Wireless Services in the 1.7 GHz and 2.1 GHz Bands.

Summary: The Commission will consider a Notice of Proposed Rulemaking concerning service rules for Advanced Wireless Services in the 1.7 GHz and 2.1 GHz bands.

6—Office of Engineering Technology: The Spectrum Policy Task Force will report on its findings and recommendations relating to the Commission's spectrum policy.

Additional information concerning this meeting may be obtained from Maureen Peratino or David Fiske, Office of Media Relations, telephone number (202) 418–0500; TTY 1–888–835–5322.

Copies of materials adopted at this meeting can be purchased from the FCC's duplicating contractor, Qualex International (202) 863–2893; Fax (202) 863–2898; TTY (202) 863–2897. These copies are available in paper format and alternative media, including large print/type; digital disk; and audio tape. Qualex International may be reached by e-mail at *Qualexint@aol.com.*

This meeting can be viewed over George Mason University's Capitol Connection. The Capitol Connection also will carry the meeting live via the Internet. For information on these services call (703) 993–3100. Audio/Video coverage of the meeting will be broadcast live over the Internet from the FCC's Audio/Video Events web page at *http://www.fcc.gov/realaudio.* Audio and video tapes of this meeting can be purchased from CACI Productions, 341 Victory Drive, Herndon, VA 20170, telephone number (703) 834–1470, Ext. 19; fax number (703) 834–0111.

Federal Communications Commission.

Marlene H. Dortch,

Secretary.

[FR Doc. 02–28324 Filed 11–4–02; 11:44 am]

BILLING CODE 6712–01–P

FEDERAL MARITIME COMMISSION

Agreement(s) Filed

The Commission hereby gives notice of the filing of the following agreement(s) under the Shipping Act of 1984. Interested parties can review or obtain copies of agreements at the Washington, DC offices of the Commission, 800 North Capitol Street, NW., Room 940. Interested parties may submit comments on an agreement to the Secretary, Federal Maritime Commission, Washington, DC 20573, within 10 days of the date this notice appears in the **Federal Register**.

Agreement No.: 011712–002.

Title: CMA CGM/CSG Slot Exchange, Sailing and Cooperative Working Agreement.

Parties: CMA CGM, S.A., China Shipping Container Lines Co. Ltd.

Synopsis: The amendment allows China Shipping to add five vessels to the agreement. The parties request expedited review.

Agreement No.: 201189–001.

Title: Passenger Cruise Wharfage and Dockage Agreement among Broward County, Worldwide Shore Services, Inc. and Carnival Corporation.

Parties: Broward County, Worldwide Shore Services, Inc., Carnival Corporation.

Synopsis: The amendment extends the term of the agreement by one year to September 30, 2010, and makes arrangements for potential berth changes caused by construction. The amendment also updates wharfage and dockage rates and minimum guarantees.

Dated: November 1, 2002.

By Order of the Federal Maritime Commission.

Bryant L. VanBrakle,

Secretary.

[FR Doc. 02–28232 Filed 11–5–02; 8:45 am]

BILLING CODE 6730–01–P

FEDERAL MARITIME COMMISSION

Ocean Transportation Intermediary License Revocations

The Federal Maritime Commission hereby gives notice that the following Ocean Transportation Intermediary licenses have been revoked pursuant to section 19 of the Shipping Act of 1984 (46 U.S.C. app. 1718) and the regulations of the Commission pertaining to the licensing of Ocean Transportation Intermediaries, effective on the corresponding date shown below:

License Number: 4644F
Name: D.J. Powers International, Inc.
Address: 4777 Aviation Parkway, Ste. O, College Park, GA 30349
Date Revoked: September 20, 2002.
Reason: Surrendered license voluntarily.

License Number: 2826F
Name: Reicar International Shipping Corporation
Address: P.O. Box 83–0746, Miami, FL 33283
Date Revoked: April 7, 2000.
Reason: Surrendered license voluntarily.

License Number: 16051F
Name: Trans-Net, Inc. dba Transnet
Address: 710-5th Avenue NW, Issaquah, WA 98027
Date Revoked: June 19, 2002.
Reason: Failed to maintain a valid bond.

Sandra L. Kusumoto,
Director, Bureau of Consumer Complaints and Licensing.

[FR Doc. 02–28235 Filed 11–5–02; 8:45 am]

BILLING CODE 6730–01–P

FEDERAL MARITIME COMMISSION

Ocean Transportation Intermediary License Reissuances

Notice is hereby given that the following Ocean Transportation Intermediary licenses have been reissued by the Federal Maritime Commission pursuant to section 19 of the Shipping Act of 1984, as amended by the Ocean Shipping Reform Act of 1998 (46 U.S.C. app. 1718) and the regulations of the Commission pertaining to the licensing of Ocean Transportation Intermediaries, 46 CFR part 515.

License No.	Name/address	Date reissued
9806N	International Link Service Inc. 160–23 Rockaway Boulevard 1st Floor, Jamaica, NY 11434	August 14, 2002.
2662NF	La Flor De Mayo Express, Inc., 311 Bruckner Boulevard, Suite B, Bronx, NY 10454	July 24, 2002.
829F	Leyden Shipping Corporation, 30 Vesey Street, Suite 1000, New York, NY 10007	September 14, 2002.
15471NF	Navicargo, Inc., 8860 NW 102 St., Medley, FL 33178	July 23, 2002.
2328NF	Ross Freight Company, Inc., 26302 South Western Avenue #7, Lomita, CA 90717	June 6, 2002.
4350NF	Seaborne International, Inc., dba Seaborne Express Line, 11222 La Cienega Blvd., Ste. 470, Inglewood, CA 90304.	September 14, 2002.
3610NF	Sorenna 3051 E. Maria Street, Rancho Dominguez, CA 90221	May 25, 2002.
12629N	T & T Shipping Services, Inc., 2546 Pitkin Avenue, Brooklyn, NY 11208	August 14, 2002.

Sandra L. Kusumoto,
Director, Bureau of Consumer Complaints and Licensing.

[FR Doc. 02–28234 Filed 11–5–02; 8:45 am]

BILLING CODE 6730–01–P

FEDERAL MARITIME COMMISSION

Ocean Transportation Intermediary License Applicants

Notice is hereby given that the following applicants have filed with the Federal Maritime Commission an application for license as a Non-Vessel Operating Common Carrier and Ocean Freight Forwarder—Ocean Transportation Intermediary pursuant to section 19 of the Shipping Act of 1984 as amended (46 U.S.C. app. 1718 and 46 CFR part 515).

Persons knowing of any reason why the following applicants should not receive a license are requested to contact the Office of Transportation Intermediaries, Federal Maritime Commission, Washington, DC 20573.

Non-Vessel Operating Common Carrier Ocean Transportation Intermediary Applicants

Rye Express Logistics, LLC, 2010 NW 84th Avenue, Miami, FL 33122–1520, Officer: Victor Arana, President (Qualifying Individual).

Transamerica Logistics, Inc., 11511 Katy Freeway, Suite 425, Houston, TX 77079, Officers: Mark T. Cornelius, Vice President (Qualifying Individual), Zulfikar Momin, President.

Cibao Cargo, Inc., 1345 Cromwell Avenue, Bronx, NY 104528, Officer: Jose A. Perdomo, President (Qualifying Individual).

Interway USA, Inc., 510 Sylvan Avenue, Suite #202, Englewood Cliffs, NJ 07632, Officers: Hyo-Sup Shim, President (Qualifying Individual), Young Don Chung, Secretary.

Non-Vessel Operating Common Carrier and Ocean Freight Forwarder Transportation Intermediary Applicants

Casasco & Nardi Inc., 372 Doughty Boulevard, Suite D, Inwood, NY 11096, Officers: Paolo Depasquali, Secretary (Qualifying Individual), Gian Luigi Ravera, President.

Direct Parcel Service Corp. dba DPS Cargo, 3550 NW 113 Ct., Miami, FL 33178, Officers: Milagros Garcia, Vice President (Qualifying Individual), Carlos M. Garcia, President.

Ocean Freight Forwarder—Ocean Transportation Intermediary Applicant

MCI Logistics, 192 Cherry Hill Road NW, Cedar Rapids, IA 52405, Roxann M. Von Lienen, Sole Proprietor.

Dated: November 1, 2002.

Bryant L. VanBrakle,
Secretary.

[FR Doc. 02–28233 Filed 11–5–02; 8:45 am]

BILLING CODE 6730–01–P

FEDERAL RESERVE SYSTEM

Formations of, Acquisitions by, and Mergers of Bank Holding Companies

The companies listed in this notice have applied to the Board for approval, pursuant to the Bank Holding Company Act of 1956 (12 U.S.C. 1841 *et seq.*) (BHC Act), Regulation Y (12 CFR Part 225), and all other applicable statutes and regulations to become a bank holding company and/or to acquire the assets or the ownership of, control of, or the power to vote shares of a bank or bank holding company and all of the banks and nonbanking companies

owned by the bank holding company, including the companies listed below.

The applications listed below, as well as other related filings required by the Board, are available for immediate inspection at the Federal Reserve Bank indicated. The application also will be available for inspection at the offices of the Board of Governors. Interested persons may express their views in writing on the standards enumerated in the BHC Act (12 U.S.C. 1842(c)). If the proposal also involves the acquisition of a nonbanking company, the review also includes whether the acquisition of the nonbanking company complies with the standards in section 4 of the BHC Act (12 U.S.C. 1843). Unless otherwise noted, nonbanking activities will be conducted throughout the United States. Additional information on all bank holding companies may be obtained from the National Information Center website at www.ffiec.gov/nic/.

Unless otherwise noted, comments regarding each of these applications must be received at the Reserve Bank indicated or the offices of the Board of Governors not later than November 29, 2002.

A. Federal Reserve Bank of New York (Betsy Buttrill White, Senior Vice President) 33 Liberty Street, New York, New York 10045-0001:

1. Elran (D.D.) Holdings Ltd., and Elran (D.D.) Investment, Ltd., both of Tel Aviv, Israel; in connection with its indirect ownership of Bank Hapoalim B.M., to become bank holding companies by acquiring indirect control of Signature Bank, New York, New York.

In connection with this application, Applicant also has applied to acquire Signature Securities Group Corporation, New York, New York, and thereby engage in financial and investment advisory services, pursuant to § 225.28(b)(6) of Regulation Y, and in agency transactional services for customer investments, pursuant to § 225.28(b)(7) of Regulation Y.

B. Federal Reserve Bank of Chicago (Phillip Jackson, Applications Officer) 230 South LaSalle Street, Chicago, Illinois 60690-1414:

1. First State Associates, Inc., Hawarden, Iowa, and Old O'Brien Banc Shares, Inc., Sutherland, Iowa; to each acquire an additional 16.67 percent of the voting shares of Hawarden Banking Company, Hawarden, Iowa, and thereby indirectly acquire voting shares of First State Bank, Hawarden, Iowa, and Security State Bank, Sutherland, Iowa.

C. Federal Reserve Bank of St. Louis (Randall C. Sumner, Vice President) 411 Locust Street, St. Louis, Missouri 63166-2034:

1. Harrodsburg First Financial Bancorp, Inc., Harrodsburg, Kentucky; to acquire at least 22.5 percent of the voting shares of Independence Bancorp, New Albany, Indiana, and thereby indirectly acquire Independence Bank, New Albany, Indiana.

Board of Governors of the Federal Reserve System, October 31, 2002.

Robert deV. Frierson,

Deputy Secretary of the Board.

[FR Doc. 02–28119 Filed 11–5–02; 8:45 am]

BILLING CODE 6210–01–S

FEDERAL RESERVE SYSTEM

Formations of, Acquisitions by, and Mergers of Bank Holding Companies

The companies listed in this notice have applied to the Board for approval, pursuant to the Bank Holding Company Act of 1956 (12 U.S.C. 1841 *et seq.*) (BHC Act), Regulation Y (12 CFR Part 225), and all other applicable statutes and regulations to become a bank holding company and/or to acquire the assets or the ownership of, control of, or the power to vote shares of a bank or bank holding company and all of the banks and nonbanking companies owned by the bank holding company, including the companies listed below.

The applications listed below, as well as other related filings required by the Board, are available for immediate inspection at the Federal Reserve Bank indicated. The application also will be available for inspection at the offices of the Board of Governors. Interested persons may express their views in writing on the standards enumerated in the BHC Act (12 U.S.C. 1842(c)). If the proposal also involves the acquisition of a nonbanking company, the review also includes whether the acquisition of the nonbanking company complies with the standards in section 4 of the BHC Act (12 U.S.C. 1843). Unless otherwise noted, nonbanking activities will be conducted throughout the United States. Additional information on all bank holding companies may be obtained from the National Information Center website at www.ffiec.gov/nic/.

Unless otherwise noted, comments regarding each of these applications must be received at the Reserve Bank indicated or the offices of the Board of Governors not later than December 2, 2002.

A. Federal Reserve Bank of Richmond (A. Linwood Gill, III, Vice President) 701 East Byrd Street, Richmond, Virginia 23261–4528:

1. TCB-S-Corp, Inc., Greenwood, South Carlina; to become a bank holding company through the acquisition of Countybank, Greenwood, South Carolina (Countybank). The transaction would be accomplished through the merger of Countybank's parent company, TCB Corporation, Greenwood, South Carolina, into TCB-S-Corp, Inc.

Board of Governors of the Federal Reserve System, November 1, 2002.

Robert deV. Frierson,

Deputy Secretary of the Board.

[FR Doc. 02–28248 Filed 11–5–02; 8:45 am]

BILLING CODE 6210–01–S

FEDERAL RETIREMENT THRIFT INVESTMENT BOARD

Sunshine Act Notice

TIME AND DATE: 9 a.m. (EST), November 18, 2002.

PLACE: 4th Floor, Conference Room, 1250 H Street, NW., Washington, DC.

STATUS: Parts will be open to the public and part closed to the public.

MATTERS TO BE CONSIDERED:

Parts Open to the Public

1. Approval of the minutes of the October 21, 2002, Board member meeting.
2. Thrift Savings Plan activity report by the Executive Director.
3. Review of KPMG LLP audit reports:

U.S. Department of Treasury Operations relating to the Thrift Savings Plan Investments in the Government Securities Investment Fund

System Enhancement and Software Change Controls of the Thrift Savings Plan at the United States Department of Agriculture, National Finance Center

Administrative Review of the Thrift Savings Plan Legacy System Subsystems at the United States Department of Agriculture, National Finance Center

Pre-Implementation Review of the New Thrift Savings Plan Record Keeping System

Preliminary report on the Thrift Savings Plan's Retention of the National Finance Center as Record Keeper

4. Semiannual review of status of audit recommendations.
5. Labor Department audit briefing.
6. Quarterly investment policy review.
7. Annual ethics briefing.

Part Closed to the Public

Discussion of litigation.

CONTACT PERSON FOR MORE INFORMATION: Thomas J. Trabucco, Director, Office of External Affairs, (202) 942–1640.

Dated: November 4, 2002.

David L. Hutner,

Secretary to the Board, Federal Retirement Thrift Investment Board.

[FR Doc. 02–28327 Filed 11–4–02; 11:46 am]

BILLING CODE 6760–01–M

FEDERAL TRADE COMMISSION

Agency Information Collection Activities; Submission for OMB Review; Comment Request

AGENCY: Federal Trade Commission (FTC).

ACTION: Notice.

SUMMARY: The FTC has submitted to the Office of Management and Budget (OMB) for review under the Paperwork Reduction Act (PRA) information collection requirements contained in four product labeling rules enforced by the Commission. The FTC is seeking public comments on the proposal to extend through December 31, 2005 the current PRA clearance for information collection requirements contained in the regulations. That clearance expires on December 31, 2002.

DATES: Comments must be filed by December 6, 2002.

ADDRESSES: Send written comments to the Office of Information and Regulatory Affairs, Office of Management and Budget, New Executive Office Building, Room 10202, Washington, DC 20503, ATTN.: Desk Office for the Federal Trade Commission (comments in electronic form should be sent to *oira_docket@omb.eop.gov*), and to Secretary, Federal Trade Commission, Room H–159, 600 Pennsylvania Ave., NW., Washington, DC 20580 (comments in electronic form should be sent to *apparelpprwork@ftc.gov* as prescribed below). All comments should be captioned ''Apparel Rules: Paperwork Comment.''

FOR FURTHER INFORMATION CONTACT: Requests for additional information or copies of the proposed information requirements should be sent to Gary Greenfield, Attorney, Office of the General Counsel, Federal Trade Commission, 600 Pennsylvania Ave., NW., H–576, Washington, DC 20580, (202)326–2753.

SUPPLEMENTARY INFORMATION: Under the PRA (44 U.S.C. 3501–3520), Federal agencies must obtain approval from OMB for each collection of information they conduct or sponsor. On August 20, 2002, the FTC sought comment on the information collection requirements associated with these product labeling rules. *See* 67 FR 53933. No comments were received. Pursuant to the OMB regulations that implement the PRA (5 CFR part 1320), the FTC is providing this second opportunity for public comment while seeking OMB approval to extend the existing paperwork clearance for the Rule.

IF a comment contains nonpublic information, it must be filed in paper form, and the first page of the document must be clearly labeled ''confidential.'' Comments that do not contain any nonpublic information may instead be filed in electronic form (in ASCII format, WordPerfect, or Microsoft Word) as part of or as an attachment to email messages directed to the following email box: *apparelpprwork@ftc.gov*. Such comments will be considered by the Commission and will be available for inspection and copying at its principal office in accordance with § 4.9(b)(6)(ii) of the Commission's rules of practice, 16 CFR 4.9(b)(6)(ii)).

Staff's burden estimates for the four rules in question are based on data from the Bureau of Census, U.S. Customs and International Trade Commission, the Department of Labor, and data or other input from industry sources. The relevant information collection requirements within these rules and corresponding burden estimates follow.

1. Regulations Under the Fur Products Labeling Act, 15 U.S.C. 69 et seq. (''Fur Act'') (Control Number: 3084–0099)

The Fur Act prohibits misbranding and false advertising of fur products. The Fur Act Regulations, 16 CFR 301, establish disclosure requirements that assist consumers in making informed purchasing decisions, and recordkeeping requirements that assist the Commission in enforcing these regulations. The Regulations also provide a procedure for exemption from certain disclosure provisions under the Act.

Estimated annual hours burden: 177,000 hours, rounded to the nearest thousand (62,400 hours for recordkeeping + 114,450 hours for disclosure).

Recordkeeping: The Regulations require that retailers, manufactures and processors, and imports keep certain records in addition to those they may keep in the ordinary course of business. Staff estimates that 1,500 retailers incur an average recordkeeping burden of about 13 hours per year (19,500 hours total); 225 manufacturers and fur processors combined incur an average recordkeeping burden of about 52 hours per year (11,700 total); and 1,200 importers of furs and fur products incur an average recordkeeping burden of 26 hours per year (31,200 hours total). The combined recordkeeping burden for the industry is approximately 62,400 hours annually.

Disclosure: Staff estimates that 1,710 respondents (210 manufacturers + 1,500 retail sellers of fur garments) each require an average of 20 hours per year to determine label content (34,200 hours total), and an average of five hours per year to draft and order labels (8,550 hours total). Staff estimates that manually attaching a label to an estimated 1,620,000 fur garments requires approximately two minutes per garment for a total of 54,000 hours annually. Thus, the total burden for labeling garments is 96,750 hours per year.

Staff estimates that the increment burden associated with the Regulations' invoice disclosure requirement, beyond the time that would be devoted to preparing invoices in its absence, is approximately 30 seconds per invoice.[1] The invoice disclosure requirement applies to fur garments, which are generally sold individually, and fur pelts, which are generally sold in groups of at least 50, on average. Assuming invoices are prepared for sales of 1,620,000 garments and 160,000 groups (an estimated 8 million pelts ÷ 50) each of imported and domestic pelts, the invoice disclosure requirement entails an estimated total burden of 16,167 hours

Staff estimates that the regulations' advertising disclosure requirements impose an average burden of one hour per year for each of the approximately 1,500 domestic fur retailers, or a total of 1,500 hours.

Thus, staff estimates the total disclosure burden to be approximately 114,450 hours (96,750 hours for labeling + 16,167 hours for invoice + 1,500 hours for advertising.

Estimated annual cost burden: $2,303,000 rounded to the nearest thousand (solely relating to labor costs).

[1] The invoice disclosure burden for PRA purposes excludes the time that respondents would spend for invoicing, apart from the Fur Act Regulations, in the ordinary course of business. *See* 5 CFR 1320.3(b)(2).

Task	Hourly rate	Burden hours	Labor cost
Determine label content	20.00	34,200	$684,000
Draft and order labels	13.00	8,500	111,150
Attach labels	[2] 8.50	54,000	459,000
Invoice disclosures	13.00	16,167	210,171
Prepare advertising disclosures	18.00	1,500	27,000
Recordkeeping	13.00	62,400	811,200
Total			2,302,521

Staff [2] believes that there are no current start-up costs or other capital costs associated with the regulations. Because the labeling of fur products has been an integral part of the manufacturing process for decades, manufacturers have in place the capital equipment necessary to comply with the Regulations' labeling requirements. Industry sources indicate that much of the information required by the Fur Act and its implementing regulations would be included on the product label even absent the regulations. Similarly, invoicing, recordkeeping, and advertising disclosures are tasks performed in the ordinary course of business so that covered firms would incur no additional capital or other non-labor costs as a result of the Act or the regulations.

2. Regulations Under the Wool Products Labeling Act, 15 U.S.C. 68 et seq. (''Wool Act'') (Control Number: 3084–0100)

The Wool Act prohibits misbranding of wool products. The Wool Act Regulations, 16 CFR part 300, establish disclosure requirements that assist consumers in making informed purchasing decisions and recordkeeping requirements that assist the Commission in enforcing the Regulations.

Estimated annual hours burden: 556,000 hours, rounded to the nearest thousand (125,000 recordkeeping hours + 430,556 disclosure hours).

Recordkeeping: Staff estimates that approximately 5,000 wool firms are subject to the Regulations' recordkeeping requirements. Based on an average annual burden of 25 hours per firm, the total recordkeeping burden is 125,000 hours.

Disclosure: Approximately 10,000 wool firms, producing or importing about 500,000,000 wool products annually, are subject to the Regulations' disclosure requirements. Staff estimates the burden of determining label content to be 20 hours per year per respondent, or a total of 200,000 hours, and the burden of drafting and ordering labels to be 5 hours per respondent per year, or a total 50,000 hours. Staff believes that the process of attaching labels is now fully automated and integrated into other production steps for about 35 percent of all affected products. For the remaining 325,000,000 items (65 percent of 500,000,000), the process is semi-automated and requires an average of approximately two seconds per item, for total of 180,556 hours per year. Thus, the total estimated annual burden for all respondents is 430,556 hours. Staff believes that any additional burden associated with advertising disclosure requirements would be minimal (less than 10,000 hours) and can be subsumed within the burden estimates set forth above.

Estimated annual cost burden: $6,817,000, rounded to the nearest thousand (solely relating to labor costs).

Task	Hourly rate	Burden hours	Labor cost
Determine label content	$20.00	200,000	$4,000,000
Draft and order labels	13.00	50,000	650,000
Attach labels	[3] 3.00	180,556	541,668
Recordkeeping	13.00	125,000	1,625,000
Total			6,816,668

[3] For products that are imported, this work generally is done in the country where they are manufactured. According to information compiled by an industry trade association using data from the International Trade Commission, the U.S. Customs Service, and the U.S. Census Bureau, approximately 90% of apparel and other textile products used in the United States is imported. With the remaining 10% attributable to U.S. production at an approximate domestic hourly wage of $8.50 to attach labels, staff has calculated a weighted average hourly wage of $3 per hour attributable to U.S. and foreign labor combined. The estimated percentage of imports supplied by particular countries is based on trade data for 2001 compiled by the Office of Textiles and Apparel, International Trade Administration, U.S. Department of Commerce. Wages in major textile exporting countries, factored into the above hourly wage estimate, were based on data published in February 2000 by the U.S. Department of Labor, Bureau of International Labor Affairs. (See ''Wages, Benefits, Poverty Line, and Meeting Workers' Needs in the Apparel and Footwear Industries of Selected Countries,'' Table I–2: ''Prevailing or Average Wages in the Manufacturing Sector and in the Footwear and Apparel Industries in Selected Countries, Latest Available Year'').

Staff believes that there are no current start-up costs or other capital costs associated with the regulations. Because the labeling of wool products has been an integral part of the manufacturing process for decades, manufacturers have in place the capital equipment necessary to comply with the regulations. Based on knowledge of the industry, staff believes that much of the information required by the Wool Act and its implementing regulations would be included on the product label even absent their requirements. Similarly, recordkeeping and advertising disclosures are tasks performed in the ordinary course of business so that covered firms would incur no additional capital or other non-labor costs as a result of the regulations.

[2] Per industry sources, most fur labeling is done in the U.S. and this rate is reflective of an average domestic hourly wage for such tasks. Conversely, attaching labels with regard to the others regulations discussed herein is mostly performed by foreign labor, as detailed in note 3.

3. Regulations Under the Textile Fiber Products Identification Act, 15 U.S.C. 70 et seq. (''Textile Act'') (Control Number: 3084–0101)

The Textile Act prohibits misbranding and false advertising of textile fiber products. The Textile Act Regulations, 16 CFR part 303, establish disclosure requirements that assist consumers in making informed purchasing decisions, and recordkeeping requirements that assist the Commission in enforcing the regulations. The regulations also contain a petition procedure for requesting the establishment of generic names for textile fibers.

Estimated annual hours burden: approximately 7,547,000 hours, rounded to the nearest thousand (537,500 recordkeeping hours + 7,009,722 disclosure hours).

Recordkeeping: Staff estimates that approximately 21,500 textile firms are subject to the Textile Regulations' recordkeeping requirements. Based on an average burden of 25 hours per firm, the total recordkeeping burden is 537,500 hours.

Disclosure: Approximately 31,500 textile firms, producing or importing about 17.2 billion textile fiber products annually, are subject to the regulations' disclosure requirements.[4] Staff estimates the burden of determining label content to be 20 hours per year per respondent, or a total of 630,000 hours and the burden of drafting and ordering labels to be 5 hours per respondent per year, or a total of 157,500 hours. Staff believes that the process of attaching labels is now fully automated and integrated into other production steps for about 35 percent of all affected products. For the remaining 11.2 billion items (65 percent of 17.2 billion), the process is semi-automated and requires an average of approximately two seconds per item, for a total of 6,222,222 hours per year. Thus, the total estimated annual burden for all respondents is 7,009,722 hours. Staff believes that any additional burden associated with advertising disclosure requirements or the filing of generic fiber name petitions would be minimal (less than 10,000 hours) and can be subsumed within the burden estimates set forth above.

Estimated annual cost burden: $40,302,000, rounded to the nearest thousand (solely relating to labor costs.).

Task	Hourly rate	Burden hours	Labor cost
Determine label content	$20.00	630,000	$12,600,000
Draft and order labels	13.00	157,500	2,047,500
Attach labels	[5] 3.00	6,222,222	18,666,666
Recordkeeping	13.00	537,500	6,987,500
Total			40,301,666

[5] See note 3.

Staff believes that there are no current start-up costs or other capital costs associated with the regulations. Because the labeling of textile products has been an integral part of the manufacturing process for decades, manufacturers have in place the capital equipment necessary to comply with the regulations' labeling requirements. Industry sources indicate that much of the information required by the Textile Act and its implementing rules would be included on the product label even absent their requirements. Similarly, recordkeeping, invoicing, and advertising disclosures are tasks performed in the ordinary course of business so that covered firms would incur no additional capital or other non-labor costs as a result of the Regulations.

4. The Care Labeling Rule, 16 CFR Part 423 (Control Number: 3084–0103)

The Care Labeling Rule, 16 CFR part 423, requires manufacturers and importers to attach permanent care label to all covered textile clothing in order to assist consumers in making purchase decisions and in determining what method to use to clean their apparel. Also, manufacturers and importers of piece goods used to make textile clothing must provide the same care information on the end of each bolt or roll of fabric.

Estimated annual hours burden: 6,054,000 hours, rounded to the nearest thousand (solely relating to disclosure[6]).

Staff estimates that approximately 16,500 manufacturers or importers of textile apparel, producing about 15.2 billion textile garments annually, are subject to the Rule's disclosure requirements. The burden of developing proper care instructions may vary greatly among firms, primarily based on the number of different lines of textile garments introduced per year that require new or revised care instructions. Staff estimates the burden of determining care instructions to be 43 hours each year per respondent, for cumulative total of 709,500 hours. Staff further estimates that the burden of drafting and ordering labels is 2 hours each year per respondent, for a total of 33,000 hours. Staff believes that the process of attaching labels is fully automated and integrated into other production steps for about 35 percent of the approximately 14.7 billion garments that are required to have care instructions on permanent labels.[7] For the remaining 9.56 billion items (65 percent of 14.7 billion), the process is semi-automated and requires an average of approximately two seconds per item, for a total of 5,311,100 hours per year. Thus, the total estimated annual burden for all respondents is 6,053,600 hours.

Estimated annual cost burden: $30,552,000, rounded to the nearest thousand (solely relating to labor costs).

[4] The apparent consumption of garments in the U.S. in 2001 was 15.2 billion. Staff estimates that .5 billion garments are exempt from the Textile Act (i.e., any kind of headwear and garments made from something other than a textile fiber product, such as leather) or are subject to a special exemption for hosiery products sold in packages where the label information is contained on the package. Based on available data, staff estimates that an additional 3 billion household textile products (non-garments, such as sheets, towels, blankets) were consumed. However, approximately .5 billion of all of these combined products (garments and non-garments) are subject to the Wool Products Labeling Act, not the Textile Fiber Products Identification Act, because they contain some amount of wool. Thus, the estimated net total products subject to the Textile Fiber Products Identification Act is 17.2 billion.

[6] The Care Labeling Rule imposes no specific recordkeeping requirements. Although the Rule requires manufacturers and importers to have reliable evidence to support the recommended care instructions, companies may provide as support current technical literature or rely on past experience.

[7] About .5 billion of the 15.2 billion garments produced annually are either not covered by the Care Labeling Rule (gloves, hats, caps, fur, plastic, or leather garments) or are subject to an exemption that allows care instructions to appear on packaging (hosiery).

Task	Hourly rate	Burden hours	Labor cost
Determine care instructions	$20.00	709,500	$14,190,000
Draft and order labels	13.00	33,000	429,000
Attach labels	[8] 3.00	5,311,100	15,933,300
Total			30,552,300

Staff[8] believes that there are no current start-up costs or other capital costs associated with the Rule. Because the labeling of textile products has been an integral part of the manufacturing process for decades, manufacturers have in place the capital equipment necessary to comply with the Rule's labeling requirements. Based on knowledge of the industry, staff believes that much of the information required by the Rule would be included on the product label even absent those requirements.

John D. Graubert,

Acting General Counsel.

[FR Doc. 02–28160 Filed 11–5–02; 8:45 am]

BILLING CODE 6750–01–M

[8] See note 3.

DEPARTMENT OF HEALTH AND HUMAN SERVICES

Food and Drug Administration

[Docket No. 00N–1526]

Robert A. Fiddes; Debarment Order

AGENCY: Food and Drug Administration, HHS.

ACTION: Notice.

SUMMARY: The Food and Drug Administration (FDA) is issuing an order under the Federal Food, Drug, and Cosmetic Act (the act) debarring Dr. Robert A. Fiddes for 20 years from providing services in any capacity to a person that has an approved or pending drug product application. FDA bases this order on a finding that Dr. Fiddes was convicted of a felony under Federal law for conspiring to make false statements to a government agency, and was a material participant in offenses for which three other people are being debarred. Dr. Fiddes has failed to request a hearing and, therefore, has waived his opportunity for a hearing concerning this action.

DATES: This order is effective November 6, 2002.

ADDRESSES: Submit applications for termination of debarment to the Dockets Management Branch (HFA–305), Food and Drug Administration, 5630 Fishers Lane, rm., 1061, Rockville, MD 20852.

FOR FURTHER INFORMATION CONTACT: Mary Catchings, Center for Drug Evaluation and Research (HFD–7), Food and Drug Administration, 5600 Fishers Lane, Rockville, MD 20857, 301–594–2041.

SUPPLEMENTARY INFORMATION:

I. Background

On September 30, 1997, the U.S. District Court for the Central District of California accepted Dr. Fiddes' plea and entered judgment against him for one count of conspiring to make false statements to a government agency, the FDA, in violation of 18 U.S.C. 371 and 1001. This conspiracy conviction was based on Dr. Fiddes participating in, directing, and encouraging the submission of false information to sponsors in required reports for clinical studies used by FDA to evaluate the safety and effectiveness of drug products.

As a result of this conviction, FDA served Dr. Fiddes by certified mail on June 6, 2002, a notice proposing to debar him for 20 years from providing services in any capacity to a person that has an approved or pending drug product application. The proposal also offered Dr. Fiddes an opportunity for a hearing on the proposal. The debarment proposal was based on findings: (1) Under section 306(b)(2)(B)(i)(II) of the act (21 U.S.C. 335a(b)(2)(B)(i)(II)) that Dr. Fiddes was convicted of a felony under Federal law for conspiracy to make false statements to a government agency and, (2) under section 306(b)(2)(B)(iii) of the act that Dr. Fiddes was a material participant in offenses leading to the conviction and debarment of three other individuals. Dr. Fiddes was provided 30 days to file objections and to request a hearing. Dr. Fiddes did not request a hearing. His failure to request a hearing constitutes a waiver of his opportunity for a hearing and a waiver of any contentions concerning his debarment.

II. Findings and Order

Therefore, the Director, Center for Drug Evaluation and Research, under section 306(b)(2)(B) of the act, and under authority delegated to her (21 CFR 5.99), finds that Dr. Robert A. Fiddes: (1) Has been convicted of a felony under Federal law for conspiring to make false statements to a government agency, and (2) was a material participant in offenses leading to the conviction and debarment of three other individuals.

As a result of the foregoing findings, Dr. Robert A. Fiddes is debarred for 20 years (4 periods of 5 years, to run consecutively, based on his conviction of a Federal felony and his role as a material participant in the offenses leading to the conviction and debarment of three other individuals) from providing services in any capacity to a person that has an approved or pending drug product application under section 505, 512, or 802 of the act (21 U.S.C. 355, 360b, or 382), or under section 351 of the Public Health Service Act (42 U.S.C. 262) (see sections 306(c)(1)(B) and (c)(2)(A)(iii) and 201(dd) of the act (21 U.S.C. 321(dd))). Any person with an approved or pending drug product application who knowingly uses the services of Dr. Fiddes, in any capacity, during his period of debarment, will be subject to civil money penalties. If Dr. Fiddes, during his period of debarment, provides services in any capacity to a person with an approved or pending drug product application, he will be subject to civil money penalties. In addition, FDA will not accept or review any abbreviated new drug applications submitted by or with the assistance of Dr. Fiddes during his period of debarment.

Any application by Dr. Fiddes for termination of debarment under section 306(d)(4) of the act should be identified with Docket No. 00N–1526 and sent to the Dockets Management Branch (see **ADDRESSES**). All such submissions are to be filed in four copies. The public availability of information in these submissions is governed by 21 CFR 10.20(j). Publicly available submissions may be seen in the Dockets Management Branch between 9 a.m. and 4 p.m., Monday through Friday.

Dated: October 15, 2002.

Janet Woodcock,

Director, Center for Drug Evaluation and Research.

[FR Doc. 02–28256 Filed 11–5–02; 8:45 am]

BILLING CODE 4160–01–S

DEPARTMENT OF HEALTH AND HUMAN SERVICES

Food and Drug Administration

[Docket No. 00N–1528]

Delfina Hernandez; Debarment Order

AGENCY: Food and Drug Administration, HHS.

ACTION: Notice.

SUMMARY: The Food and Drug Administration (FDA) is issuing an order under the Federal Food, Drug, and Cosmetic Act (the act) debarring Ms. Delfina Hernandez for 5 years from providing services in any capacity to a person that has an approved or pending drug product application. FDA bases this order on a finding that Ms. Hernandez was convicted of a felony under Federal law for conspiring to make false statements in matters within the jurisdiction of a government agency, and that Ms. Hernandez' conduct undermined the process for the regulation of drugs. Ms. Hernandez has failed to request a hearing and, therefore, has waived her opportunity for a hearing concerning this action.

DATES: This order is effective November 6, 2002.

ADDRESSES: Submit applications for termination of debarment to the Dockets Management Branch (HFA–305), Food and Drug Administration, 5630 Fishers Lane, rm. 1061, Rockville, MD 20852.

FOR FURTHER INFORMATION CONTACT: Mary Catchings, Center for Drug Evaluation and Research (HFD–7), Food and Drug Administration, 5600 Fishers Lane, Rockville, MD 20857, 301–594–2041.

SUPPLEMENTARY INFORMATION:

I. Background

On October 22, 1997, the U.S. District Court for the Central District of California accepted Ms. Hernandez' plea of guilty to one count of conspiring to make false statements in matters within the jurisdiction of a government agency, FDA, a Federal felony offense under 18 U.S.C. sections 371 and 1001. This conviction was based on Ms. Hernandez' participation in falsifying data and information on clinical studies for use by FDA in determining the safety and effectiveness of drug products.

As a result of this conviction, FDA served Ms. Hernandez by certified mail on May 13, 2002, a notice proposing to debar her for 5 years from providing services in any capacity to a person that has an approved or pending drug product application. The proposal also offered Ms. Hernandez an opportunity for a hearing on the proposal. The debarment proposal was based on a finding, under section 306(b)(2)(B)(i)(II) and (a)(2) of the act (21 U.S.C. 335a(b)(2)(B)(i)(II) and (a)(2)) that Ms. Hernandez was convicted of a felony under Federal law for conspiring to make false statements in matters within the jurisdiction of a government agency, FDA, and that Ms. Hernandez' conduct undermined the process for the regulation of drugs. Ms. Hernandez was provided 30 days to file objections and to request a hearing. Ms. Hernandez did not request a hearing. Her failure to request a hearing constitutes a waiver of her opportunity for a hearing and a waiver of any contentions concerning her debarment.

II. Findings and Order

Therefore, the Director, Center for Drug Evaluation and Research, under section 306(b)(2) of the act, and under authority delegated to her (21 CFR 5.99), finds that Ms. Delfina Hernandez has been convicted of conspiracy to commit a felony under Federal law for conduct relating to the regulation of drug products and that Ms. Hernandez' conduct undermined the process for the regulation of drugs.

As a result of the foregoing finding, Ms. Delfina Hernandez is debarred for 5 years from providing services in any capacity to a person that has an approved or pending drug product application under section 505, 512, or 802 of the act (21 U.S.C. 355, 360b, or 382) or under section 351 of the Public Health Service Act (42 U.S.C. 262) (see sections 306(c)(1)(B) and (c)(2)(A)(iii) and 201(dd) of the act (21 U.S.C. 321(dd))). Any person with an approved or pending drug product application who knowingly uses the services of Ms. Hernandez, in any capacity during her period of debarment, will be subject to civil money penalties. If Ms. Hernandez, during her period of debarment, provides services in any capacity to a person with an approved or pending drug product application, she will be subject to civil money penalties. In addition, FDA will not accept or review any abbreviated new drug applications submitted by or with the assistance of Ms. Hernandez during her period of debarment.

Any application by Ms. Hernandez for termination of debarment under section 306(d)(4) of the act should be identified with Docket No. 00N–1528 and sent to the Dockets Management Branch (see **ADDRESSES**). All such submissions are to be filed in four copies. The public availability of information in these submissions is governed by 21 CFR 10.20(j). Publicly available submissions may be seen in the Dockets Management Branch between 9 a.m. and 4 p.m., Monday through Friday.

Dated: October 15, 2002.

Janet Woodcock,

Director, Center for Drug Evaluation and Research.

[FR Doc. 02–28255 Filed 11–5–02; 8:45 am]

BILLING CODE 4160–01–S

DEPARTMENT OF HEALTH AND HUMAN SERVICES

Food and Drug Administration

[Docket Nos. 02M–0250, 02M–0203, 02M–0180, 02M–0218, 02M–0272, 02M–0271, 02M–0145, 02M–0311, 02M–0172, 02M–0217, 02M–0179, 02M–0255, 02M–0173, 02M–0235, 02M–0167, 02M–0174, 02M–0216, and 02M–0236]

Medical Devices; Availability of Safety and Effectiveness Summaries for Premarket Approval Applications

AGENCY: Food and Drug Administration, HHS.

ACTION: Notice.

SUMMARY: The Food and Drug Administration (FDA) is publishing a list of premarket approval applications (PMAs) that have been approved. This list is intended to inform the public of the availability of safety and effectiveness summaries of approved PMAs through the Internet and the agency's Dockets Management Branch.

ADDRESSES: Submit written requests for copies of summaries of safety and effectiveness to the Dockets Management Branch (HFA–305), Food and Drug Administration, 5630 Fishers Lane, rm. 1061, Rockville, MD 20852. Please cite the appropriate docket number as listed in table 1 of this document when submitting a written request. *See* the **SUPPLEMENTARY INFORMATION** section for electronic access to the summaries of safety and effectiveness.

FOR FURTHER INFORMATION CONTACT: Thinh Nguyen, Center for Devices and Radiological Health (HFZ–402), Food and Drug Administration, 9200 Corporate Blvd., Rockville, MD 20850, 301–594–2186.

SUPPLEMENTARY INFORMATION:

I. Background

In January 1998, FDA revised 21 CFR 814.44(d) and 814.45(d) (63 FR 4571, January 30, 1998) to discontinue individual publication of PMA approvals and denials in the **Federal Register**, providing instead to post this information to FDA's home page at

http://www.fda.gov on the Internet. In addition, the regulations provide that FDA publish a quarterly list of available safety and effectiveness summaries of PMA approvals and denials that were announced during that quarter. FDA believes that this procedure expedites public notification of these actions because announcements can be placed on the Internet more quickly than they can be published in the **Federal Register**, and FDA believes that the Internet is accessible to more people than the **Federal Register**.

In accordance with section 515(d)(4) and (e)(2) of the Federal Food, Drug, and Cosmetic Act (the act) (21 U.S.C. 360e(d)(4) and (e)(2)), notification of an order approving, denying, or withdrawing approval of a PMA will continue to include a notice of opportunity to request review of the order under section 515(g) of the act. The 30-day period for requesting reconsideration of an FDA action under § 10.33(b) (21 CFR 10.33(b)) for notices announcing approval of a PMA begins on the day the notice is placed on the Internet. Section 10.33(b) provides that FDA may, for good cause, extend this 30-day period. Reconsideration of a denial or withdrawal of approval of a PMA may be sought only by the applicant; in these cases, the 30-day period will begin when the applicant is notified by FDA in writing of its decision.

The following is a list of approved PMAs for which summaries of safety and effectiveness were placed on the Internet in accordance with the procedure described above from April 1, 2002, through June 30, 2002. There were no denial actions during this period. The list provides the manufacturer's name, the product's generic name or the trade name, and the approval date.

TABLE 1.—LIST OF SAFETY AND EFFECTIVENESS SUMMARIES FOR APPROVED PMAS MADE AVAILABLE APRIL 1, 2002, THROUGH JUNE 30, 2002

PMA Number/Docket No.	Applicant	Trade Name	Approval Date
P000008/02M–0250	BioEntrics Corp.	LAP–BAND Adjustable Gastric Banding System	June 5, 2001.
P980033/02M–0203	Boston Scientific Scimed, Inc.	WALLSTENT Endoprosthesis	November 16, 2001.
P010027/02M–0180	Ophthalmic Innovations International, Inc.	ALLERGAN, INC. Model AC 21B Anterior Chamber Intraocular Lens (Cataract)	November 21, 2001.
P010033/02M–0218	Cellestis Ltd.	QUANTIFERON–TB	November 28, 2001.
P000049/02M–0272	Nitinol Medical Technologies, Inc.	CARDIOSEAL Septal Occlusion System With QWIKLOAD	December 5, 2001.
P000039/02M–0271	AGA Medical Corp.	THE AMPLATZER Septal Occluder (ASO) And AMPLATZER Exchange System	December 5, 2001.
P010030/02M–0145	Lifecor, Inc.	Wearable Cardioverter Defibrillator (WCD) 2000 ''Lifevest'' System	December 18, 2001.
H000002/02M–0311	VISX, Inc.	VISX EXCIMER LASER SYSTEM AND CUSTOM CONTOURED ABLATION PATTERN (C0–CAP) METHOD	December 19, 2001.
P980024(S1)/02M–0172	Vysis	PATHVYSION HER–2 DNA Probe Kit	December 31, 2001.
P9600009(S7)/02M–0217	Medtronic, Inc.	MEDTRONIC ACTIVA Parkinson's Control System	January 14, 2002.
P010054/02M–0179	Roche Diagnostics Co.	ELECSYS ANTI–HBS Immunoassay PRECICONTROL ANTI02M–HBS	February 28, 2002.
P000037(S1)/02M–0255	Medical Carbon Research Institute, LLC	ON–X Prosthetic Heart Valve, Models ONXM and ONXMC	March 6, 2002.
P010025/02M–0173	Hologic, Inc.	LORAD Digital Breast Imager	March 15, 2002.
P000033/02M–0235	SulzerIntra Therapeutics, Inc.	INTRACOIL Self-Expanding Peripheral Stent	April 3, 2002.
H000007/02M–0167	AGA Medical Corp.	AMPLATZER PFO Occluder	April 5, 2002.
P010018/02M–0174	Refractec, Inc.	VIEWPOINT CK SYSTEM	April 11, 2002.
P900033(S8)/02M–0216	Integra Lifesciences, Corp.	INTEGRA Dermal Regeneration Template	April 19, 2002.
P010012/02M–0236	Guidant Corp.	CONTAK CD/EASYTRAK Lead System, Models 4510, 4511, 4512, And 4513	May 2, 2002.

II. Electronic Access

Persons with access to the Internet may obtain the documents at http://www.fda.gov/cdrh/pmapage.html.

Dated: October 23, 2002.

Linda S. Kahan,

Deputy Director, Center for Devices and Radiological Health.

[FR Doc. 02–28155 Filed 11–5–02; 8:45 am]

BILLING CODE 4160–01–S

DEPARTMENT OF HEALTH AND HUMAN SERVICES

Food and Drug Administration

[Docket No. 02D–0449]

''Draft Guidance for Industry: The Administrative New Animal Drug Application Process''; Availability

AGENCY: Food and Drug Administration, HHS.

ACTION: Notice.

SUMMARY: The Food and Drug Administration (FDA) is announcing the availability of a draft guidance for industry (#132) entitled ''The Administrative New Animal Drug Application Process.'' The guidance defines what an administrative new animal drug application (NADA) is, the procedures that should be followed before a sponsor submits an administrative NADA, and the intended timeframe for review of administrative NADAs.

DATES: Submit written or electronic comments on the draft guidance by January 21, 2003, to ensure their adequate consideration in preparation of the final document. General comments on agency guidance documents are welcome at any time.

Submit written comments on the information collection requirements by January 6, 2003.

ADDRESSES: Submit written requests for single copies of the draft guidance document to the Communications Staff (HFV–12), Center for Veterinary Medicine (CVM), Food and Drug Administration, 7519 Standish Pl., Rockville, MD 20855. Send one self-addressed adhesive label to assist that office in processing your requests. See the **SUPPLEMENTARY INFORMATION** section for electronic access to the draft guidance document.

Submit written comments on the draft guidance document to the Dockets Management Branch (HFA–305), Food and Drug Administration, 5630 Fishers Lane, rm. 1061, Rockville, MD 20852. Submit electronic comments to http:///www.fda.gov/dockets/ecomments. Comments should be identified with the full title of the draft guidance document and the docket number found in the heading of this document.

Submit written comments on the collection of information requirements to the Dockets Management Branch (address above). Comments should be identified with the docket number found in brackets in the heading of this document.

FOR FURTHER INFORMATION CONTACT: Gail Schmerfeld, Center for Veterinary Medicine (HFV–100), Food and Drug Administration, 7500 Standish Pl., Rockville, MD 20855, 301–827–1796, e-mail: gschmer1@cvm.fda.gov.

SUPPLEMENTARY INFORMATION:

I. Background

The Federal Food, Drug, and Cosmetic Act (the act) (21 U.S.C. 321 *et seq.*) prohibits the introduction into interstate commerce of new animal drugs that are not the subject of an approved NADA. Section 512(b) of the act (21 U.S.C. 360b) and part 514 (21 CFR part 514) describe the information that must be submitted to FDA, specifically CVM, as part of an NADA. CVM encourages sponsors to submit data for review at the most appropriate and productive times in the drug development process. Sponsors may submit, and CVM intends to review, data in support of discrete technical sections during the investigation of the new animal drug. The guidance explains phased review and direct review, describes the technical sections, tells sponsors how they should submit data or information in support of a technical section for review, and tells sponsors how they should submit an administrative NADA.

An administrative NADA is an NADA that is submitted after CVM has reviewed all of the technical sections containing the information required for the approval of the new animal drug and CVM has issued a technical section complete letter for each of those technical sections.

II. Significance of Guidance

The level 1 draft guidance is being issued consistent with FDA's good guidance practices regulation (21 CFR 10.115). The draft guidance, when finalized, will represent the agency's current thinking about the administrative NADA process. It does not create or confer any rights for or on any person and does not operate to bind FDA or the public. An alternative approach may be used if such an approach satisfies the requirements of the applicable statutes and regulations.

III. The Paperwork Reduction Act of 1995

Under the Paperwork Reduction Act of 1995 (the PRA) (44 U.S.C. 3501–3520), Federal agencies must obtain approval from the Office of Management and Budget (OMB) for each collection of information they conduct or sponsor. ''Collection of information'' is defined in 44 U.S.C. 3502(3) and 5 CFR 1320.3(c) and includes agency requests or requirements that members of the public submit reports, keep records, or provide information to a third party. Section 3506(c)(2)(A) of the PRA (44 U.S.C. 3506(c)(2)(A)) requires Federal agencies to provide a 60-day notice in the **Federal Register** concerning each proposed collection of information before submitting the collection to OMB for approval. To comply with this requirement, FDA is publishing notice of the proposed collection of information set forth in this document.

With respect to the following collection of information, FDA invites comments on: (1) Whether the proposed collection of information is necessary for the proper performance of FDA's functions, including whether the information will have practical utility; (2) the accuracy of FDA's estimate of the burden of the proposed collection of information, including the validity of the methodology and assumptions used; (3) ways to enhance the quality, utility, and clarity of the information to be collected; and (4) ways to minimize the burden of the collection of information on respondents, including through the use of automated collection techniques, when appropriate, and other forms of information technology.

Title: The Administrative New Animal Drug Application Process.

Description: The act prohibits the introduction into interstate commerce of new animal drugs that are not the subject of an approved NADA. Section 512(b) of the act and the regulations in part 514 describe the information that must be submitted to FDA, specifically to CVM, as part of an NADA.

CVM encourages sponsors to submit data and information for review at the most appropriate and productive times in the drug development process rather than submitting all data and information at one time. Sponsors may submit, and CVM intends to review, data or information in support of discrete technical sections during the investigation of the new animal drug. This process is known as phased review. Sponsors may submit part or all of the data and information needed to support a technical section in a phased submission. The data submitted in

support of each technical section are covered by an existing paperwork clearance under OMB control number 0910–0032. FDA is seeking new paperwork clearance for the cover letter, table of contents, and summary that should accompany each submission. The cover letter identifying the submission as a ''phased submission'' should: (1) Describe briefly the purpose of the submission and the information contained in it, (2) reference or attach any pertinent documentation regarding previous agreements or understandings between the sponsor and CVM, (3) identify persons CVM may contact regarding any specifics of the submission, and (4) convey any other information the sponsor considers important or necessary to facilitate the review of the submission. There are potentially eight technical sections: Chemistry, manufacturing and controls; effectiveness; target animal safety; human food safety; environmental impact; labeling; freedom of information (FOI) summary; and, all other information.

After a sponsor has received technical section complete letters for each technical section containing information required for the approval of the new animal drug, the sponsor may file an administrative NADA. The administrative NADA should include a cover letter identifying the submission as an ''Administrative NADA,'' a signed FDA Form 356V, a table of contents, summary, copies of the technical section complete letters for each required technical section, complete facsimile labeling, and the FOI summary.

The cover letters that should be provided with each submission and with the administrative NADA and the copies of technical section complete letters represent new paperwork.

FDA estimates the burden of this collection of information as follows:

TABLE 1.—ESTIMATED ANNUAL REPORTING BURDEN[1]

	No. of Respondents	Annual Frequency per Response	Total Annual Responses	Hours per Response	Total Hours
Administrative NADA applications	190	.24	47	4	188
Phased submissions	190	1.31	250	2	500

[1] There are no capital costs or operating and maintenance costs associated with this collection of information.

FDA averaged the number of administrative NADA applications and phased submissions for the past 2 years. Hours per response took into account that cover letters submitted summarized information contained in the submission and did not require any new information.

IV. Comments

The draft guidance document is being distributed for comment purposes only and is not intended for implementation at this time. Interested persons may submit to the Dockets Management Branch (see **ADDRESSES**) written or electronic comments regarding this draft guidance document. Submit electronic comments to http://www.fda.gov/dockets/ecomments. Two copies of any mailed comments are to be submitted, except that individuals may submit one copy. Comments are to be identified with the docket number found in brackets in the heading of this document.

Submit written comments concerning the information collection requirements to the Dockets Management Branch. A copy of the document and received comments may be seen in the Dockets Management Branch between 9 a.m. and 4 p.m., Monday through Friday.

V. Electronic Access

Electronic comments may be submitted on the Internet at http://www.fda.gov/dockets/ecomments. Once on the Internet site, select 02D–0449 ''The Administrative New Animal Drug Application Process'' and follow the directions. A copy of this document may be obtained on the Internet from the CVM home page at http://www.fda.gov/cvm.

Dated: October 28, 2002.

Margaret M. Dotzel,

Associate Commissioner for Policy.

[FR Doc. 02–28257 Filed 11–5–02; 8:45 am]

BILLING CODE 4160–01–S

DEPARTMENT OF HEALTH AND HUMAN SERVICES

Health Resources and Services Administration

Notice of Senior Executive Service Performance Review Board Membership

The Health Resources and Services Administration (HRSA) announces the appointment of members to the HRSA Senior Executive Service (SES) Performance Review Board (PRB). This action is being taken in accordance with Title 5, U.S.C., Section 4314(c)(4) of the Civil Service Reform Act of 1978, which requires members of performance review boards to be published in the **Federal Register**.

The function of the PRB is to ensure consistency, stability and objectivity in SES performance appraisals, and to make recommendations to the Administrator, HRSA, relating to the performance of senior executives in the Agency.

The following persons will serve on the HRSA SES Performance Review Board:

Dennis P. Williams, Neil Sampson, Stephen R. Smith, Katherine M. Marconi, Mary J. Horner, Douglas Morgan, Patricia L. Mackey, Catherine A. Flickinger, Merle G. McPherson, William D. Hobson, Marcia K. Brand, Peter C. van Dyck, J. Henry Montes, James Macrae, Jon L. Nelson, Denise H. Geolot, Samuel Shekar, Kerry Nesseler, Deborah Parham.

For further information about the HRSA Performance Review Board, contact Ms. Wendy Ponton, HRSA Office of Human Resources and Development, 5600 Fishers Lane, Room 14A43, Rockville, Maryland 20857.

Dated: October 30, 2002.

Elizabeth M. Duke,

Administrator.

[FR Doc. 02–28153 Filed 11–5–02; 8:45 am]

BILLING CODE 4165–15–P

DEPARTMENT OF HEALTH AND HUMAN SERVICES

National Institutes of Health

Proposed Collection; Comment Request; Patterns and Consequences of Alcohol Use in Non-Reservation Indians

SUMMARY: In compliance with the requirement of Section 3506(c)(2)(A) of the Paperwork Reduction Act of 1995, regarding the opportunity for public

comment on proposed data collection projects, the National Institute on Alcohol Abuse and Alcoholism (NIAAA), National Institutes of Health (NIH) will publish periodic summaries of proposed projects submitted to the Office of Management and Budget (OMB) for review and approval.

Proposed Collection: Title: Patterns and Consequences of Alcohol Use in Non-Reservation Indians. *Type of Information Collection Request:* New. *Form Number:* No form number has been assigned because this is a new survey. *Need and Use of Information Collection:* This survey will be done in preparation for a broader study to follow. The broader study will examine the enhanced vulnerability of some American Indian people to alcohol abuse, alcoholism and adverse consequences of drinking. Most of the existing research has been restricted to reservation-residing tribes. This study will examine non-reservation individuals and thus be better representative of the majority of American Indians. Second, the samples in existing studies are predominantly male. This fact may reflect the disproportionate occurrence of substance abuse disorders in American Indian males. However, it may also reflect a sampling bias. Third, sources of the reported heterogeneity among tribes in drinking practices and outcomes are seldom examined systematically. Therefore, there is a need for the systematic study of male and female non-reservation residing American Indians and their patterns/consequences of alcohol use. The proposed telephone survey is a feasibility study to ascertain: (a) The effectiveness of this research modality in reaching non-reservation American Indians in Oklahoma (as many as 25% of non-reservation American Indians do not have access to a private phone) (b) the appropriateness of the length of the instrument and (c) the clarity and specificity of the questions. Respondents will be asked twenty-eight questions about community perceptions of substance use, service availability, familial substance use, general health concerns, and current problems related to these issues. Respondents will be American Indian individuals over the age of 21 who meet initial criteria and who are reached by random telephone sampling within Oklahoma. Information gained and strategies tested in the telephone survey will also inform methodologies and survey protocols for subsequent in person and mail surveys of American Indians that will investigate American Indian health concerns. The NIAAA is the federal agency with primary responsibility for supporting and conducting biomedical and behavioral research on the causes, consequences, treatment, and prevention of alcoholism and alcohol-related problems. One of the Institute's goals is to examine and address alcohol consumption, its biomedical sequelae and the prevention and treatment of alcohol dependence and alcohol related pathology in specific American Indian populations. *Frequency of Response:* Once per respondent. *Affected Public:* Individuals. *Type of Respondents:* American Indian adults over 21 years of age. The reporting burden is as follows: *Estimated Number of Respondents:* 50. *Estimated Number of Responses per Respondent:* One response per respondent. *Average Burden Hours per Response:* One-third hour per individual. *Estimated Total Annual Burden Hours Requested:* 16.7 hours. There are no costs to respondents. There are no capital costs, operating costs or maintenance costs to report.

Request for Comments: Written comments and suggestions from the public and affected agencies are invited on the following points: (1) Whether the data collection is necessary for the proper performance of the function of the agency, including whether the information will have practical utility; (2) the accuracy of the agency's estimate of the burden of the proposed collection of information, including the validity of the methodology and assumptions; (3) ways to enhance the quality, utility, and clarity of the information to be collected; and (4) ways to minimize the burden of the collection of information on those who are to respond, including the use of appropriate automated, electronic, mechanical, or other technological collection techniques or other forms of information technology.

FOR FURTHER INFORMATION CONTACT: To request more information on the proposed project or to obtain a copy of the data collection plans and instruments, contact Carmen M. Richardson, NIH/NIAAA/OCR, 6000 Executive Boulevard, Suite 302, MSC 7003, Bethesda, MD 20892–7003, or e-mail your request to: *crichard@mail.nih.gov.* Ms. Richardson can be contacted by telephone at 301–443–1285.

Comments Due Date: Comments regarding this information collection are best assured of having their full effect if received within 60 days of the date of this publication.

Dated: October 29, 2002.

Stephen Long,

Executive Officer, NIAAA.

[FR Doc. 02–28110 Filed 11–5–02; 8:45 am]

BILLING CODE 4140–01–M

DEPARTMENT OF HEALTH AND HUMAN SERVICES

National Institutes of Health

Proposed Collection; Comment Request; Agricultural Health Study—A Prospective Cohort Study of Cancer and Other Diseases Among Men and Women in Agriculture—Influence of Corn Farming on the Immune System Sub-Study

SUMMARY: In compliance with the requirement of section 3506(c)(2)(A) of the Paperwork Reduction Act of 1995, for opportunity for public comment on proposed data collection projects, the National Cancer Institute (NCI), the National Institutes of Health (NIH) will publish periodic summaries of proposed projects to be submitted to the Office of Management and Budget (OMB) for review and approval.

Proposed Collection: Title: Agricultural Health Study—A Prospective Cohort Study of Cancer and Other Diseases Among Men and Women in Agriculture—Influence of Corn Farming on the Immune System Sub-study. *Type of Information Collection Request:* Revision of a currently approved collection (0925–0406, expiration 11/30/03). *Need and Use of Information Collection:* The Agricultural Health Study (AHS) is an ongoing prospective cohort study of 89,658 farmers, their spouses, and commercial applicators of pesticides from Iowa and North Carolina. The proposed collection of additional information is intended to assess the effects of corn farming activities and exposures during the farming season on the immune system. The collection is intended to determine whether there are immune changes or altered immune function occurring in corn farmers and whether such perturbations are associated with specific farming exposures or activities, such as exposure to certain pesticides during planting or grain dusts during harvesting. The characterization of any changes in immune function occurring in corn farmers may contribute to understanding of the etiology of immune-related diseases that have increased incidence among farmers, including non-Hodgkin's lymphoma and other immune-related cancers. In addition, identification of specific exposures associated with immune

effects will assist in subsequent identification of specific etiologic agents for such immune-related effects will assist in subsequent identification of specific etiologic agents for such immune-related diseases. *Frequency of Response:* Single time reporting. *Affected Public:* Individuals or households, Farms. *Type of Respondents:* Male corn farmers who apply pesticides and male agriculture extension workers. The annual reporting burden is as follows: *Estimated Number of Respondents:* 25,552; *Estimated Number of Responses per Respondent:* 2.2; *Average Burden Hours Per Response:* 1.25; and Estimated Total Annual Burden Hours Requested: 14.046. The annualized cost to respondents is estimated at: $144,108. There are no Capital Costs to report. There are no Operating or Maintenance Costs to report.

Request for Comments: Written comments and/or suggestions from the public and affected agencies are invited on one or more of the following points: (1) Evaluate whether the proposed collection of information is necessary for the proper performance of the function of the agency, including whether the information will have practical utility; (2) Evaluate the accuracy of the agency's estimate of the burden of the proposed collection of information, including the validity of the methodology and assumption used; (3) Enhance the quality, utility, and clarity of the information to be collected; and (4) Minimize the burden of the collection of information on those who are to respond, including the use of appropriate automated, electronic, mechanical, or other technological collection techniques or other forms of information technology.

FOR FURTHER INFORMATION CONTACT: To request more information on the proposed project or to obtain a copy of the data collection plans and instruments, contact Roel Vermeulen, Epidemiology and Biostatistics Program, Divisions of Cancer Etiology, National Cancer Institute, EPN 8109, 6120 Executive Boulevard, Rockville, MD 20852, or call (301) 496–9093, or E-mail your request, including your address, to: *vermeulr@mail.nih.gov*

Comments Due Date: Comments regarding this information collection are best assured of having their full effect if received within 60 days of the date of this publication.

Dated: October 31, 2002.

Reesa L. Nichols,

NCI Project Clearance Liaison.

[FR Doc. 02–28231 Filed 11–5–02; 8:45 am]

BILLING CODE 4140–01–M

DEPARTMENT OF HEALTH AND HUMAN SERVICES

National Institute of Health

National Cancer Institute; Notice of Closed Meeting

Pursuant to section 10(d) of the Federal Advisory Committee Act, as amended (5 U.S.C. Appendix 2), notice is hereby given of the following meeting.

The meeting will be closed to the public in accordance with the provisions set forth in sections 552b(c)(4) and 552b(c)(6), Title 5 U.S.C., as amended. The grant applications and the discussions could disclose confidential trade secrets or commercial property such as patentable material, and personal information concerning individuals associated with the grant applications, the disclosure of which would constitute a clearly unwarranted invasion of personal privacy.

Name of Committee: National Cancer Institute Initial Review Group, Subcommittee C—Basic & Preclinical.

Date: December 10–12, 2002.

Time: 8 a.m. to 6 p.m.

Agenda: To review and evaluate grant applications.

Place: Holiday Inn Select, 8120 Wisconsin Avenue, Bethesda, MD 20814.

Contact Person: Michael B. Small, PhD, Scientific Review Administrator, Grants Review Branch, Division of Extramural Activities, National Cancer Institute, National Institutes of Health, 6116 Executive Boulevard, Room 8040, Bethesda, MD 20892, (301) 402–0996.

(Catalogue of Federal Domestic Assistance Program Nos. 93.392, Cancer Construction; 93.393, Cancer Cause and Prevention Research; 93.394, Cancer Detection and Diagnosis Research; 93.395, Cancer Treatment Research; 93.396, Cancer Biology Research; 93.397, Cancer Centers Support; 93.398, Cancer Research Manpower; 93.399, Cancer Control, National Institutes of Health, HHS)

Dated: October 31, 2002.

LaVerne Y. Stringfield,

Director, Office of Federal Advisory Committee Policy.

[FR Doc. 02–28227 Filed 11–5–02; 8:45 am]

BILLING CODE 4140–01–M

DEPARTMENT OF HEALTH AND HUMAN SERVICES

National Institutes of Health

National Heart, Lung, and Blood Institute; Notice of Closed Meeting

Pursuant to section 10(d) of the Federal Advisory Committee Act, as amended (5 U.S.C. appendix 2), notice is hereby given of the following meeting.

The meeting will be closed to the public in accordance with the provisions set forth in sections 552b(c)(4) and 552b(c)(6), Title 5 U.S.C., as amended. The grant applications and the discussions could disclose confidential trade secrets or commercial property such as patentable material, and personal information concerning individuals associated with the grant applications, the disclosure of which would constitute a clearly unwarranted invasion of personal privacy.

Name of Committee: National Heart, Lung, and Blood Institute Special Emphasis Panel, Review of R24 Applications.

Date: November 25, 2002.

Time: 1 PM to 4 PM.

Agenda: To review and evaluate grant applications.

Place: 6701 Rockledge Dr., Bethesda, MD 20892 (Telephone Conference Call).

Contact Person: Irina Gordienko, PhD, Division of Extramural Activities, National Heart, Lung, and Blood Institute, National Institutes of Health, 6701 Rockledge Drive, Room 7180, MSC 7924, Bethesda, MD 20892, 301–435–0725.

(Catalogue of Federal Domestic Assistance Program Nos. 93.233, National Center for Sleep Disorders Research; 93.837, Heart and Vascular Diseases Research; 93.838, Lung Diseases Research; 93.839, Blood Diseases and Resources Research, National Institutes of Health, HHS)

Dated: October 30, 2002.

LaVerne Y. Stringfield,

Director, Office of Federal Advisory Committee Policy.

[FR Doc. 02–28224 Filed 11–5–02; 8:45 am]

BILLING CODE 4140–01–M

DEPARTMENT OF HEALTH AND HUMAN SERVICES

National Institutes of Health

National Institute of Arthritis and Musculoskeletal and Skin Diseases; Notice of Closed Meeting

Pursuant to section 10(d) of the Federal Advisory Committee Act, as amended (5 U.S.C. appendix 2), notice is hereby given of the following meeting.

The meeting will be closed to the public in accordance with the provisions set forth in sections 552b(c)(4) and 552b(c)(6), Title 5 U.S.C., as amended. The grant applications and the discussions could disclose confidential trade secrets or commercial property such as patentable material, and personal information concerning individuals associated with the grant applications, the disclosure of which

would constitute a clearly unwarranted invasion of personal privacy.

Name of Committee: National Institute of Arthritis and Musculoskeletal and Skin Diseases Special Emphasis Panel.

Date: November 18, 2002.

Time: 8:30 a.m. to 5 p.m.

Agenda: To review and evaluate grant applications.

Place: Double Tree Hotel, 1750 Rockville Pike, Rockville, MD 20852.

Contact Person: Richard J. Bartlett, PhD, Scientific Review Administrator, National Institute of Arthritis and Musculoskeletal and Skin Diseases, 6701 Democracy Plaza, Bethesda, MD 20892, (301) 594–4952.

This notice is being published less than 15 days prior to the meeting due to the timing limitations imposed by the review and funding cycle.

(Catalogue of Federal Domestic Assistance Program Nos. 93.846, Arthritis, Musculoskeletal and Skin Diseases Research, National Institutes of Health, HHS)

Dated: October 30, 2002.

LaVerne Y. Stringfield,

Director, Office of Federal Advisory Committee Policy.

[FR Doc. 02–28225 Filed 11–5–02; 8:45 am]

BILLING CODE 4140–01–M

DEPARTMENT OF HEALTH AND HUMAN SERVICES

National Institutes of Health

National Institute of Arthritis and Musculoskeletal and Skin Diseases; Amended Notice of Meeting

Notice is hereby given of a change in the meeting of the National Institute of Arthritis and Musculoskeletal and Skin Diseases Special Emphasis Panel, October 10, 2002, 1 p.m. to October 10, 2002, 2:30 p.m., Holiday Inn—Chevy Chase, Palladian East and Center Rooms, 5520 Wisconsin Avenue, Chevy Chase, MD, 20815, which was published in the **Federal Register** on September 20, 2002, 67 FR 59299–59300.

The meeting will be held on 11/18/2002 at 1 p.m.–2:30 p.m. at the Holiday Inn—Chevy Chase. The meeting is closed to the public.

Dated: October 30, 2002.

LaVerne Y. Stringfield,

Director, Office of Federal Advisory Committee Policy

[FR Doc. 02–28226 Filed 11–5–02; 8:45 am]

BILLING CODE 4140–01–M

DEPARTMENT OF HEALTH AND HUMAN SERVICES

National Institutes of Health

National Institute of Environmental Health Sciences; Notice of Closed Meetings

Pursuant to section 10(d) of the Federal Advisory Committee Act, as amended (5 U.S.C. Appendix 2), notice is hereby given of the following meetings.

The meetings will be closed to the public in accordance with the provisions set forth in sections 552b(c)(4) and 552b(c)(6), Title 5 U.S.C., as amended. The grant applications and the discussions could disclose confidential trade secrets or commercial property as patentable material, and personal information concerning individuals associated with the grant applications, the disclosure of which would constitute a clearly unwarranted invasion of personal privacy.

Name of Committee: National Institute of Environmental Health Sciences Special Emphasis Panel, Review of Conference Grant Applications (R13s).

Date: December 10, 2002.

Time: 1 p.m. to 2 p.m.

Agenda: To review and evaluate grant applications.

Place: NIEHS, 79 T.W. Alexander Drive, Building 4401, Conference Room 122, Research Triangle Park, NC 27709, (Telephone Conference Call).

Contact Person: RoseAnne M. McGee, Associate Scientific Review Administrator, Scientific Review Branch, Office of Program Operations, Division of Extramural Research and Training, Nat. Inst. of Environmental Health Sciences, P.O. Box 12233, MD EC–30, Research Triangle Park, NC 27709, (919) 541–0752.

Name of Committee: National Institute of Environmental Health Sciences Special Emphasis Panel, Review of Conference Grant Applications (R13s).

Date: December 10, 2002.

Time: 4 p.m. to 5 p.m.

Agenda: To review and evaluate grant applications.

Place: NIEHS, 79 T.W. Alexander Drive, Building 4401, Conference Room 122, Research Triangle Park, NC 27709, (Telephone Conference Call).

Contact Person: RoseAnne M. McGee, Associate Scientific Review Administrator, Scientific Review Branch, Office of Program Operations, Division of Extramural Research and Training, Nat. Inst. of Environmental Health Sciences, P.O. Box 12233, MD EC–30, Research Triangle Park, NC 27709, (919) 541–0752.

(Catalogue of Federal Domestic Assistance Program Nos. 93.113, Biological Response to Environmental Health Hazards; 93.114, Applied Toxicological Research and Testing; 93.115, Biometry and Risk Estimation—Health Risks from Environmental Exposures; 93.142, NIEHS Hazardous Waste Worker Health and Safety Training; 93.143, NIEHS Superfund Hazardous Substances—Basic Research and Education; 93.894, Resources and Manpower Development in the Environmental Health Sciences, National Institutes of Health, HHS)

Dated: October 31, 2002.

LaVerne Y. Stringfield,

Director, Office of Federal Advisory Committee Policy.

[FR Doc. 02–28228 Filed 11–5–02; 8:45 am]

BILLING CODE 4140–01–M

DEPARTMENT OF HEALTH AND HUMAN SERVICES

National Institutes of Health

National Institute of Alcohol Abuse and Alcoholism; Notice of Closed Meeting

Pursuant to section 10(d) of the Federal Advisory Committee Act, as amended (5 U.S.C. Appendix 2), notice is hereby given of the following meeting.

The meeting will be closed to the public in accordance with the provisions set forth in sections 552b(c)(4) and 552b(c)(6), Title 5 U.S.C., as amended. The grant applications and the discussions could disclose confidential trade secrets or commercial property such as patentable material, and personal information concerning individuals associated with the grant applications, the disclosure of which would constitute a clearly unwarranted invasion of personal privacy.

Name of Committee: National Institute on Alcohol Abuse and Alcoholism Special Emphasis Panel, ZAA1 DD (03) R21 Application Review.

Date: November 19, 2002.

Time: 10:30 a.m. to 11:30 a.m.

Agenda: To review and evaluate grant applications.

Place: 6000 Executive Boulevard, Suite 409, Rockville, MD 20852, (Telephone Conference Call).

Contact Person: Sathasiva B. Kandasamy, PhD, Scientific Review Administrator, Extramural Project Review Branch, Office of Scientific Affairs, National Institute on Alcohol, Abuse and Alcoholism, 6000 Executive Blvd, Suite 409, Bethesda, MD 20892–7003, (301) 443–2926, *skandasa@mail.nih.gov*.

(Catalogue of Federal Domestic Assistance Program Nos. 93.271, Alcohol Research Career Development Awards for Scientists and Clinicians; 93.272, Alcohol National Research Service Awards for Research Training; 93.273, Alcohol Research Programs; 93.891, Alcohol Research Center Grants, National Institutes of Health, HHS)

Dated: October 31, 2002.

LaYerne Y. Stringfield,

Director, Office of Federal Advisory Committee Policy.

[FR Doc. 02–28229 Filed 11–5–02; 8:45 am]

BILLING CODE 4140–01–M

DEPARTMENT OF HEALTH AND HUMAN SERVICES

National Institutes of Health

National Institutes of Mental Health; Notice of Closed Meeting

Pursuant to section 10(d) of the Federal Advisory Committee Act, as amended (5 U.S.C. Appendix 2), notice is hereby given of the following meeting.

The meeting will be closed to the public in accordance with the provisions set forth in sections 552b(c)(4) and 552b(c)(6), Title 5 U.S.C., as amended. The grant applications and the discussions could disclose confidential trade secrets or commercial property such as patentable material, and personal information concerning individuals associated with the grant applications, the disclosure of which would constitute a clearly unwarranted invasion of personal privacy.

Name of Committee: National Institutes of Mental Health Special Emphasis Panel, Large Scale Research on Persons Living With HIV/AIDS.

Date: December, 2, 2002.

Time: 8:30 a.m. to 5 p.m.

Agenda: To review and evaluate applications.

Place: Holiday Inn, 8120 Wisconsin Avenue, Bethesda, MD 20814.

Contact Person: Richard E. Weise, PhD, Scientific Review Administrator, Division of Extramural Activities, National Institute of Mental Health, NIH, Neuroscience Center, 6001 Executive Boulevard, Room 6140, MSC9606, Bethesda, MD 20892–9606, (301) 443–1225. *rweise@mail.nig.gov.*

(Catalogue of Federal Domestic Assistance Program Nos. 93.242, Mental Health Research Grants; 93.281, Scientist Development Award, Scientist Development Award for Clinicians, and Research Scientist Award; 93.282, Mental Health National Research Service Awards for Research Training, National Institutes of Health, HHS)

Dated: October 31, 2002.

LaVerne Y. Stringfield,

Director, Office of Federal Advisory Committee Policy.

[FR Doc. 02–28230 Filed 11–5–02; 8:45 am]

BILLING CODE 4140–01–M

DEPARTMENT OF HEALTH AND HUMAN SERVICES

National Institutes of Health

Center for Scientific Review; Notice of Closed Meeting

Pursuant to section 10(d) of the Federal Advisory Committee Act, as amended (5 U.S.C. appendix 2), notice is hereby given of the following meeting.

The meeting will be closed to the public in accordance with the provisions set forth in sections 552b(c)(4) and 552b(c)(6), title 5 U.S.C., as amended. The grant applications and the discussions could disclose confidential trade secrets or commercial property such as patentable material, and personal information concerning individuals associated with the grant applications, the disclosure of which would constitute a clearly unwarranted invasion of personal privacy.

Name of Committee: Center for Scientific Review Special Emphasis Panel, ZRG1 PBC (01) Protein Glycosylation.

Date: October 31, 2002.

Time: 3 p.m. to 4:30 p.m.

Agenda: To review and evaluate grant applications.

Place: NIH, Rockledge 2, Bethesda, MD 20892. (Telephone Conference Call.)

Contact Person: Zakir Bengali, PhD, Scientific Review Administrator, Center for Scientific Review, National Institutes of Health, 6701 Rockledge Drive, Room 5150, MSC 7842, Bethesda, MD 20892. (301) 435–1742.

This notice is being published less than 15 days prior to the meeting due to the timing limitations imposed by the review and funding cycle.

(Catalogue of Federal Domestic Assistance Program Nos. 93.306, Comparative Medicine, 93.306; 93.333, Clinical Research, 93.333, 93.337, 93.393–93.396, 93.837–93.844, 93.846–93–878, 93.892, 93.893, National Institutes of Health, HHS)

Dated: October 28, 2002.

LaVerne Y. Springfield,

Director, Office of Federal Advisory Committee Policy.

[FR Doc. 02–28222 Filed 11–5–02; 8:45 am]

BILLING CODE 7140–01–M

DEPARTMENT OF HEALTH AND HUMAN SERVICES

National Institutes of Health

Center for Scientific Review; Notice of Closed Meetings

Pursuant to section 10(d) of the Federal Advisory Committee Act, as amended (5 U.S.C. appendix 2), notice is hereby given of the following meetings.

The meetings will be closed to the public in accordance with the provisions set forth in sections 552b(c)(4) and 552b(c)(6), title 5 U.S.C., as amended. The grant applications and the discussions could disclose confidential trade secrets or commercial property such as patentable material, and personal information concerning individuals associated with the grant applications, the disclosure of which would constitute a clearly unwarranted invasion of personal privacy.

Name of Committee: Center for Scientific Review Special Emphasis Panel, ZRG1 SSS–2 (05) SBIR-Chemical Protein Synthesis.

Date: November 4, 2002.

Time: 3 p.m. to 4 p.m.

Agenda: To review and evaluate grant applications.

Place: NIH, Rockledge 2, Bethesda, MD 20892. (Telephone Conference Call.)

Contact Person: Prabha L. Atreya, PhD, Scientific Review Administrator, Center for Scientific Review, National Institutes of Health, 6701 Rockledge Drive, Room 5156, MSC 7842, Bethesda, MD 20892. (301) 435–8367. *atreyap@csr.nih.gov.*

This notice is being published less than 15 days prior to the meeting due to the timing limitations imposed by the review and funding cycle.

Name of Committee: Center for Scientific Review Special Emphasis Panel, Vector and Parasites.

Date: November 7–8, 2002.

Time: 8 a.m. to 5 p.m.

Agenda: To review and evaluate grant applications.

Place: Holiday Inn, 8120 Wisconsin Avenue, Bethesda, MD 20814.

Contact Person: Jean Hickman, PhD, Scientific Review Administrator, Center for Scientific Review, National Institutes of Health, 6701 Rockledge Drive, Room 4194, MSC 7808, Bethesda, MD 20892. (301) 435–1146.

This notice is being published less than 15 days prior to the meeting due to the timing limitations imposed by the review and funding cycle.

Name of Committee: Center for Scientific Review Special Emphasis Panel, Prokaryotic and Eukaryotic Molecular Biology and Genetics.

Date: November 7–8, 2002.

Time: 8 p.m. to 4 p.m.

Agenda: To review and evaluate grant applications.

Place: Holiday Inn Bethesda, 8120 Wisconsin Avenue, Bethesda, MD 20814.

Contact Person: Mary P. McCormick, PhD, Scientific Review Administrator, Center for Scientific Review, National Institutes of Health, 6701 Rockledge Drive, Room 2208, MSC 7890, Bethesda, MD 20892. (301) 435–1047. *mccormim@csr.nih.gov.*

This notice is being published less than 15 days prior to the meeting due to the timing limitations imposed by the review and funding cycle.

Name of Committee: Center for Scientific Review Special Emphasis Panel, ZRG1 CDF–

1 02 Panel on Molecular Mechanisms of Embryogenesis.

Date: November 7, 2002.

Time: 1 p.m. to 3 p.m.

Agenda: To review and evaluate grant applications.

Place: NIH, Rockledge 2, Bethesda, MD 20892. (Telephone Conference Call.)

Contact Person: Michael H. Sayre, PhD, Scientific Review Administrator, Center for Scientific Review, National Institutes of Health, 6701 Rockledge Drive, Room 5128, MSC 7840, Bethesda, MD 20892. (301) 435–1219.

This notice is being published less than 15 days prior to the meeting due to the timing limitations imposed by the review and funding cycle.

Name of Committee: Center for Scientific Review Special Emphasis Panel, Small Business: Genetics, Genomics and Nucleic Acid Technologies.

Date: November 13–15, 2002.

Time: 7 p.m. to 4 p.m.

Agenda: To review and evaluate grant applications.

Place: The Governor's House, 1615 Rhode Island Avenue, NW., Washington, DC 20036.

Contact Person: Michael H. Schaefer, PhD, Scientific Review Administrator, Genetic Sciences IRG, Center for Scientific Review, National Institutes of Health, 6701 Rockledge Drive, Room 6166, MSC 7890, Bethesda, MD 20892. (301) 435–2477. *schaefem@csr.nih.gov.*

This notice is being published less than 15 days prior to the meeting due to the timing limitations imposed by the review and funding cycle.

Name of Committee: Center for Scientific Review Special Emphasis Panel, Member Conflict: Exposure to Toxins in Children.

Date: November 18, 2002.

Time: 12:30 p.m. to 1:30 p.m.

Agenda: To review and evaluate grant applications.

Place: NIH, Rockledge 2, Bethesda, MD 20892. (Telephone Conference Call.)

Contact Person: Cheri Wiggs, PhD, Scientific Review Administrator, Center for Scientific Review, National Institutes of Health, 6701 Rockledge Drive, Room 3180, MSC 7848, Bethesda, MD 20892. (301) 435–1261.

This notice is being published less than 15 days prior to the meeting due to the timing limitations imposed by the review and funding cycle.

Name of Committee: Center for Scientific Review Special Emphasis Panel, TIC Diseases.

Date: November 20, 2002.

Time: 1 p.m. to 2:30 p.m.

Agenda: To review and evaluate grant applications.

Place: NIH, Rockledge 2, Bethesda, MD 20892. (Telephone Conference Call.)

Contact Person: Jean Hickman, PhD, Scientific Review Administrator, Center for Scientific Review, National Institutes of Health, 6701 Rockledge Drive, Room 4194, MSC 7808, Bethesda, MD 20892. (301) 435–1146.

Name of Committee: Center for Scientific Review Special Emphasis Panel, Review of Multi-Center Study Grant.

Date: November 26, 2002.

Time: 11 p.m. to 1 p.m.

Agenda: To review and evaluate grant applications.

Place: NIH, Rockledge 2, Bethesda, MD 20892. (Telephone Conference Call.)

Contact Person: Abraham P. Bautista, PhD, Scientific Review Administrator, Center for Scientific Review, National Institutes of Health, 6701 Rockledge Drive, Room 5102, MSC 7852, Bethesda, MD 20892. (301) 435–1506. *bautista@csr.nih.gov.*

(Catalogue of Federal Domestic Assistance Program Nos. 93.306, Comparative Medicine, 93.306; 93.333, Clinical Research, 93.333, 93.337, 93.393–93.396, 93.837–93.844, 93.846–93.878, 93.892, 93.893, National Institutes of Health, HHS)

Dated: October 30, 2002.

LaVerne Y. Stringfield,

Director, Office of Federal Advisory Committee Policy.

[FR Doc. 02–28223 Filed 11–5–02; 8:45 am]

BILLING CODE 4140–01–M

DEPARTMENT OF HOUSING AND URBAN DEVELOPMENT

[Docket No. FR–4739–N–45]

Notice of Proposed Information Collection: Comment Request; Inventory of Housing Units Designated for the Elderly/Persons With Disabilities

AGENCY: Office of the Assistant Secretary for Housing—Federal Housing Commissioner, HUD.

ACTION: Notice.

SUMMARY: The proposed information collection requirement described below will be submitted to the Office of Management and Budget (OMB) for review, as required by the Paperwork Reduction Act. The Department is soliciting public comments on the subject proposal.

DATES: *Comments Due Date:* January 6, 2002.

ADDRESSES: Interested persons are invited to submit comments regarding this proposal. Comments should refer to the proposal by name and/or OMB Control Number and should be sent to: Wayne Eddins, Reports Management Officer, Department of Housing and Urban Development, 451 7th Street, SW., L'Enfant Plaza Building, Room 8003, Washington, DC 20410.

FOR FURTHER INFORMATION CONTACT: Beverly J. Miller, Director, Office of Asset Management, Department of Housing and Urban Development, 451 7th Street, SW., Washington, DC 20410, telephone (202) 708–1320 (this is not a toll-free number) for copies of the proposed forms and other available information.

SUPPLEMENTARY INFORMATION: The Department is submitting the proposed information collection to OMB for review, as required by the Paperwork Reduction Act of 1995 (44 U.S.C. chapter 35, as amended).

This Notice is soliciting comments from members of the public and affected agencies concerning the proposed collection of information to: (1) Evaluate whether the proposed collection is necessary for the proper performance of the functions of the agency, including whether the information will have practical utility; (2) Evaluate the accuracy of the agency's estimate of the burden of the proposed collection of information; (3) Enhance the quality, utility, and clarity of the information to be collected; and (4) Minimize the burden of the collection of information on those who are to respond; including the use of appropriate automated collection techniques or other forms of information technology, *e.g.,* permitting electronic submission of responses.

This Notice also lists the following information:

Title of Proposal: Inventory of Housing Units Designated for the Elderly/Persons with Disabilities.

OMB Control Number, if applicable: 2502–0550.

Description of the need for the information and proposed use: The information collected will be used to obtain current data with respect to occupancy preferences, unit distribution, and unit features. This information will assist prospective applicants with locating multifamily housing units for which they are eligible.

Agency form numbers, if applicable: HUD–90059.

Estimation of the total numbers of hours needed to prepare the information collection including number of respondents, frequency of response, and hours of response: The estimated total number of hours needed to prepare the information collection is 15,000; the number of respondents is 30,000 generating approximately 30,000 annual responses; the frequency of response is on occasion; and the estimated time needed to prepare the response is 30 minutes.

Status of the proposed information collection: Extension of a currently approved collection.

Authority: The Paperwork Reduction Act of 1995, 44 U.S.C., Chapter 35, as amended.

Dated: October 29, 2002.

John C. Weicher,

Assistant Secretary for Housing—Federal Housing Commissioner.

[FR Doc. 02–28122 Filed 11–5–02; 8:45 am]

BILLING CODE 4210–27–M

DEPARTMENT OF HOUSING AND URBAN DEVELOPMENT

[Docket No. FR–4734–N–64]

Notice of Submission of Proposed Information Collection to OMB: HUD's Loss Mitigation Default Counseling Demonstration Program

AGENCY: Office of the Chief Information Officer, HUD.

ACTION: Notice.

SUMMARY: The proposed information collection requirement described below has been submitted to the Office of Management and Budget (OMB) for review, as required by the Paperwork Reduction Act. The Department is soliciting public comments on the subject proposal.

DATES: *Comments Due Date:* December 6, 2002.

ADDRESSES: Interested persons are invited to submit comments regarding this proposal. Comments should refer to the proposal by name and/or OMB approval number (2502–0549) and should be sent to: Lauren Wittenberg, OMB Desk Officer, Office of Management and Budget, Room 10235, New Executive Office Building, Washington, DC 20503; Fax number (202) 395–6974; E-mail *Lauren_Wittenberg@omb.eop.gov.*

FOR FURTHER INFORMATION CONTACT: Wayne Eddins, Reports Management Officer, QDAM, Department of Housing and Urban Development, 451 Seventh Street, Southwest, Washington, DC 20410; e-mail *Wayne_Eddins@HUD.gov;* telephone (202) 708–2374. This is not a toll-free number. Copies of the proposed forms and other available documents submitted to OMB may be obtained from Mr. Eddins.

SUPPLEMENTARY INFORMATION: The Department has submitted the proposal for the collection of information, as described below, to OMB for review, as required by the Paperwork Reduction Act (44 U.S.C. Chapter 35). The Notice lists the following information: (1) The title of the information collection proposal; (2) the office of the agency to collect the information; (3) the OMB approval number, if applicable; (4) the description of the need for the information and its proposed use; (5) the agency form number, if applicable; (6) what members of the public will be affected by the proposal; (7) how frequently information submission will be required; (8) an estimate of the total number of hours needed to prepare the information submission including number of respondents, frequency of response, and hours of response; (9) whether the proposal is new, an extension, reinstatement, or revision of an information collection requirement; and (10) the name and telephone number of an agency official familiar with the proposal and of the OMB Desk Officer for the Department.

This Notice also lists the following information:

Title of Proposal: HUD's Loss Mitigation Default Counseling Demonstration Program.

OMB Approval Number: 2502–0549.

Form Numbers: None.

Description of the Need for the Information and its Proposed Use: The information obtained from this collection requirement will be used during the course of the demonstration program to verify a payment voucher that will enable participating Housing Counseling Agencies and lenders to be reimbursed for their loss mitigation efforts.

Respondents: Individuals or households, business or other for-profit, not-for-profit institutions.

Frequency of Submission: On occasion, monthly.

	Number of respondents	×	Annual responses	×	Hours per response	=	Burden hours
Reporting Burden	11	....	749	....	0.5		4,120

Total estimated Burden Hours: 4,120.

Status: Extension of a currently approved collection.

Authority: Section 3507 of the Paperwork Reduction Act of 1995, 44 U.S.C. 35, as amended.

Dated: October 29, 2002.

Wayne Eddins,

Departmental Reports Management Officer, Office of the Chief Information Officer.

[FR Doc. 02–28121 Filed 11–6–02; 8:45 am]

BILLING CODE 4210–72–M

DEPARTMENT OF HOUSING AND URBAN DEVELOPMENT

[Docket No. FR–4723–FA–05]

Announcement of Funding Awards for Fiscal Year 2002 Alaska Native/Native Hawaiian Institutions Assisting Communities Program

AGENCY: Office of the Assistant Secretary for Policy Development and Research, HUD.

ACTION: Announcement of funding awards.

SUMMARY: In accordance with section 102(a)(4)(C) of the Department of Housing and Urban Development Reform Act of 1989, this document notifies the public of funding awards for Fiscal Year 2002 Alaska Native/Native Hawaiian Institutions Assisting Communities Program. The purpose of this document is to announce the names, addresses and the amount awarded to the winners to be used to assist Alaska Native/Native Hawaiian institutions of higher education to expand their role and effectiveness in addressing communities in their localities, consistent with the purpose of title I of the Housing and Community Development Act of 1974, as amended.

FOR FURTHER INFORMATION CONTACT: Susan Brunson, Office of University Partnerships, U.S. Department of Housing and Urban Development, Room 8106, 451 Seventh Street, SW., Washington, DC 20410, telephone (202) 708–3061, ext. 3852. To provide service for persons who are hearing-or-speech-impaired, this number may be reached via TTY by Dialing the Federal Information Relay Service on 800–877–8339 or 202–708–1455. (Telephone number, other than ''800'' TTY numbers are not toll free.)

SUPPLEMENTARY INFORMATION: The Alaska Native/Native Hawaiian

Institutions Assisting Communities Program was approved by Congress under section 107 of the Community Development Block Grant appropriations for the Fiscal Year 2002, and is administered by the Office of University Partnerships under the Assistant Secretary for Policy Development and Research. In addition to this program, the Office of University Partnerships administers HUD's ongoing grant programs to institutions of higher education as well as creates initiatives through which colleges and universities can bring their traditional missions of teaching, research, service, and outreach to bear on the pressing local problems in their communities.

The AN/NHIAC program provides funds for a wide range of CDBG-eligible activities including housing rehabilitation and financing, property demolition or acquisition, public facilities, economic development, business entrepreneurship, and fair housing programs. Of the $6.2 million available, $3.1 million was allotted to fund Alaskan Hawaiian institutions and $3.1 million to fund Native Hawaiian institutions. Each eligible campus was permitted to apply individually, for $600,000 the maximum amount that can be awarded for a period of 36 months.

The Catalog Federal Domestic Assistance number for this program is 14.515.

On March 26, 2002 (67 FR 13981), HUD published a notice of funding availability (NOFA) announcing the availability of $6.2 million in Fiscal Year 2002 funds for the AN/NHIAC Program. The Department reviewed, evaluated, and scored the applications received based on the criteria in the NOFA. As a result, HUD has funded the applications below, in accordance with section 102(a)(4)(C) of the Department of Housing and Urban Development Reform Act of 1989 (103 Stat. 1987, 42 U.S.C. 3545), the Department is publishing details concerning the recipients of funding awards, as set forth below.

List of Awardees for Grant Assistance Under the FY 2002 Alaska Native/ Native Hawaiian Institutions Assisting Communities Program Funding Competition, by Institution, Address and Grant Amount

Pacific/Hawaii

1. University of Hawaii, Mr. Randall Francisco, Leeward Community College, 96–045 Ala Ike, Peal City, HI 96782. Grant: $579,586.

2. University of Hawaii, Dr. June Aono, West Oahu, 96–129 Ala Ike, Peal City, HI 96782. Grant: $599,875.

3. University of Hawaii, Ms. Sandra Okazaki, Windward Community College, 45–720 Kea'ahala Road, Kaneohe, HI 96744. Grant: $590,036.

Northwest/Alaska

4. University of Alaska Fairbanks, Lincoln Saito, Chukchi Campus, University of Alaska Fairbanks, PO Box 757880, Fairbanks, AK 99775–880. Grant: $395,000.

Dated: October 23, 2002.

Harold L. Bunce,

Deputy Assistant Secretary for Economic Affairs.

[FR Doc. 02–28124 Filed 11–5–02; 8:45 am]

BILLING CODE 4210–62–P

DEPARTMENT OF HOUSING AND URBAN DEVELOPMENT

[Docket No. FR–4723–FA–18]

Announcement of Funding Awards for Fiscal Year 2002 Doctoral Dissertation Research Grant Program

AGENCY: Office of the Assistant Secretary for Policy Development and Research, HUD.

ACTION: Announcement of funding awards.

SUMMARY: In accordance with section 102(a)(4)(C) of the Department of Housing and Urban Development Reform Act of 1989, this document notifies the public of funding awards for the Fiscal Year (FY) 2002 Doctoral Dissertation Research Grant (DDRG) Program. The purpose of this document is to announce the names and addresses of the award winners and the amount of the awards to be used to help doctoral candidates complete dissertations on topics that focus on housing and urban development issues.

FOR FURTHER INFORMATION CONTACT: Susan Brunson, Office of University Partnerships, U.S. Department of Housing and Urban Development, Room 8106, 451 Seventh Street, SW., Washington, DC 20410, telephone (202) 708–3061, ext. 3852. To provide service for persons who are hearing-or-speech-impaired, this number may be reached via TTY by Dialing the Federal Information Relay Service on 800–877–8339 or 202–708–1455. (Telephone number, other than ''800'' TTY numbers are not toll free.)

SUPPLEMENTARY INFORMATION: The DDRG is administered by the Office of University Partnerships under the Assistant Secretary for Policy Development and Research (PD&R). This Office also administers PD&R's other grant programs for academics. The DDRG Program was created as a means of expanding the number of researchers conducting research on subjects of interest to HUD. Doctoral candidates can receive grants of up to $30,000 to complete work on their dissertations. Grants are for a two-year period.

The Office of University Partnerships under the Assistant Secretary for Policy Development and Research (PD&R) administers this program. This Office also administers PD&R's other grant programs for academics.

The Catalog of Federal Domestic Assistance number for this program is 14.516.

March 26, 2002 (67 FR 14617), HUD published a Notice of Funding Availability (NOFA) announcing the availability of $150,000 in FY 2002 funds for the EDSRG Program. The Department reviewed, evaluated and scored the applications received based on the criteria in the NOFA. As a result, HUD has funded the applications announced below, and in accordance with section 102(a)(4)(C) of the Department of Housing and Urban Development Reform Act of 1989 (103 Stat. 1987, U.S.C. 3545), the Department is publishing details concerning the recipients of funding awards, as set forth below. More information about the winners can be found at *www.oup.org.*

List of Awardees for Grant Assistance Under the FY 2001 Doctoral Dissertation Research Grant Program Funding Competition, by Name, Address, Grant Amount and Number of Students Funded

1. University of Louisville, Dr. Steven Bourassa, (502) 852–5720, Department of Urban and Public Affairs, 426 West Bloom Street, Louisville, KY 40208. *Grant:* $14,934 to Mark Wright.

2. Rutgers, the State University of New Jersey, Dr. Robert Lake, (732) 932–3133 ext. 521, Bloustein School of Planning & Policy Development, 33 Livingston Avenue, 4th Floor, New Burnswick, NJ 08901. *Grant:* $25,000 to Philip Ashton.

3. The Regents of the University of California, Professor Victoria Basolo, (949) 824–3521, Department of Urban and Regional Planning, 202 Social Ecology I, University Tower, Suite 300, Irvine, CA 92697–7600. *Grant:* $25,000 to Jennifer Gress.

4. University of Kentucky Research Foundation, Richard Schein, (859) 257–2119, Department of Geography, 201 Kinkead Hall, Lexington KY 40506–0057. *Grant:* $19,220 to James Hanlon.

5. University of Southern California, Dr. Lloyd Armstrong, Jr., (213) 821–1147, School of Policy, Planning and

Development, RGL 312, Los Angeles, CA 90089–0626. *Grant:* $25,000 to Todd Gish.

6. University of California, Irvine, Katherine Tate, (949) 824–8762, 3151 Social Science Plaza, Irvine, CA 92697–5100. *Grant:* $10,080 to Kim DeFronzo.

7. University of Southern California, Dr. Lloyd Armstrong Jr., (213) 821–1147, School of Policy, Planning, and Development, VKC 363, University Park Campus, Los Angeles, CA 90089–0626. *Grant:* $25,000 to Zhou Yu.

8. Tulane University, Dr. Jeanette Jennings, (504) 862–3473, School of Social Work, Administrators of the Tulane Educational Funds, 6823 St. Charles Avenue, New Orleans, LA 70118. *Grant:* $24,512 to David Mainor.

9. George Washington University, Dr. Anthony Yezer, (202) 994–6755, Department of Economics, 2121 I Street, NW., Suite 601, Washington, DC 20052. *Grant:* $24,962 to Michael Hollar.

10. University at Albany, SUNY, Dr. John R. Logan, (518) 442–4656, Sociology Department, 1400 Washington Avenue, Albany, NY 12222. *Grant:* $25,000 to Deirdre Oakeley.

11. University of Texas, Dr. Robert Wilson, (512) 471–8947, LBJ School of Public Affairs, P.O. Box 7726, Austin, TX 78713–7726. *Grant:* $25, 000 to Mona Koerner.

12. University of Louisville, Professor Hank V. Savitch, (502) 852–7929, Department of Urban and Public Affairs, 426 West Bloom Street, Louisville, KY 40208. *Grant:* $25,000 to Grigoriy Ardashev.

13. University of Minnesota-Twin Cities, Dr. Ann Ziebarth, (612) 625–8795, Design, Housing and Apparel, 240 McNeal Hall, 1985 Buford Avenue, St. Paul, MN 55108. *Grant:* $17,902 to Eunju Hwang.

14. University of California, Los Angels, Dr. Jacqueline Leavitt, (310) 825–4380, Office of Contract and Grant Administrator, 10920 Wilshire Blvd., Suite 1200, Los Angeles, CA 90024–1406. *Grant:* $24,688 to Martha Matsuoka.

15. The Regents of the University of California, Professor Don Zimmerman, (805) 893–3422, Department of Sociology, Santa Barbara, CA 93106. *Grant:* $24,713 to Michele Wakin

16. Brandis University, Professor Mark Sciegaj, (781) 736–3800, Heller School for Social Policy and Management, P.O. Box 549110, MS#035, Waltham, MA 02454–9110. *Grant* $23,828 to William Bartosch.

17. Rutgers, the State University of New Jersey, Dr. Michael Greenberg, (732) 932–0387, ext. 673, School of Public Health of the University of Medicine & Dentistry, Bloustein School of Planning & Public Policy, 33 Livingston Avenue, Suite 300, New Brunswick, NJ 08901. *Grant:* $25,000 to Fred Ellerbush.

Dated: October 23, 2002.

Harold Bunce,

Deputy Assistant Secretary for Economic Affairs.

[FR Doc. 02–28126 Filed 11–5–02; 8:45 am]

BILLING CODE 4210–62–P

DEPARTMENT OF HOUSING AND URBAN DEVELOPMENT

[Docket No. FR–4723–FA–17]

Announcement of Funding Awards for Fiscal Year 2002 Early Doctoral Student Research Grant Program

AGENCY: Office of the Assistant Secretary for Policy Development and Research, HUD.

ACTION: Announcement of funding awards.

SUMMARY: In accordance with section 102(a)(4)(C) of the Department of Housing and Urban Development Reform Act of 1989, this document notifies the public of funding awards for the Fiscal Year 2002 Early Doctoral Student Research Grant (EDSRG) Program. The purpose of this document is to announce the names and addresses of the award winners and the amount of the awards to be used to help doctoral students cultivate their research skills through the preparation of research manuscripts that focus on housing and urban development issues.

FOR FURTHER INFORMATION CONTACT: Susan Brunson, Office of University Partnerships, Department of Housing and Urban Development, Room 8106, 451 Seventh Street, SW., Washington, DC 20410, telephone (202) 708–3061, ext. 3852. To provide service for persons who are hearing-or-speech-impaired, this number may be reached via TTY by Dialing the Federal Information Relay Service on 800–877–8339 or 202–708–1455. (Telephone number, other than ''800'' TTY numbers are not toll free.)

SUPPLEMENTARY INFORMATION: The EDSRG Program provides funds to eligible doctoral students to cultivate their research skills through preparation of research manuscripts that focus on housing and urban development issues. Students, who are in the early stages of their doctoral studies, have 12 months to complete a major research study. The maximum amount to be awarded to doctoral student is $15,000.

The Office of University Partnerships under the Assistant Secretary for Policy Development and Research (PD&R) administers this program. This Office also administers PD&R's other grant programs for academics.

The Catalog of Federal Domestic Assistance number for this program is 14.517.

March 26, 2002 (67 FR 14607), HUD published a Notice of Funding Availability (NOFA) announcing the availability of $150,000 in FY 2002 funds for the EDSRG Program. The Department reviewed, evaluated and scored the applications received based on the criteria in the NOFA. As a result, HUD has funded the applications announced below, and in accordance with section 102(a)(4)(C) of the Department of Housing and Urban Development Reform Act of 1989 (103 Stat. 1987, U.S.C. 3545), the Department is publishing details concerning the recipients of funding awards, as set forth below. More information about the winners can be found at *www.oup.org*

List of Awardees for Grant Assistance Under the FY 2002 Early Doctoral Student Research Grant Program Funding Competition, by Name, Address, Grant Amount and Number of Students Funded

1. University of Pennsylvania, Mr. W. Stuart Watson, Real Estate, 1333 South 36th Street, Philadelphia, PA 19104. *Grant:* $12,000 to Kevin Gillen.

2. University of Pittsburgh, Mr. Michael M. Crouch, Public Policy and Public Administration, 3G07 Wesley W. Posvar Hall, Pittsburgh, PA 15260. *Grant:* $14,942 to Andrew Aurand.

3. Syracuse University, Mr. Stuart Taub, Economics, 113 Bowne Hall, Syracuse, NY 13244. *Grant:* $15,000 to Christopher Cunningham.

4. Harvard University, Robert Bloomberg, Public Policy, Holyoke Center #727, 1350 Massachusetts Avenue, Cambridge, MA 02138–3800. *Grant:* $13,050 to Jenny Schuetz.

5. University of Illinois, Mr. Eric A. Gislason, Economic Development, 1333 South 36th Street, Philadelphia, PA 19104. *Grant:* $15,000 to Raymond Massssssenburg.

6. University of California, Berkeley's, Mr. Steven Raphel, Public Policy, University of California, Berkeley, Berkeley, CA 94720–5940. *Grant:* $14,820 to Sarah R. Dunn.

7. Ohio State University, Mr. Richard D. Fortner, City & Regional Planning, 1960 Kenny Road, Columbus, OH 43210–1063. *Grant:* $14,611 to Katrin Britta Anacker.

8. Cornell University, Ms. Kimberly Hayes, City and Regional Planning, 115 Day Hall, Ithaca, NY 14853. *Grant:* $15,000 to Jonathan Martin.

9. University of Southern California, Mr. Lloyd Armstrong, Jr., School of Planning and Development, University Park, Los Angeles, CA 90089–1147. *Grant:* $15,000 to Duan Zhuang.

10. University of Arizona, Mr. Richard Powell, Sociology, P.O. Box 3308, Tucson, AZ 85722–3308. *Grant:* $15,000 to Laura Stephens.

Dated: October 23, 2002.

Harold Bunce,

Deputy Assistant Secretary for Economic Affairs.

[FR Doc. 02–28125 Filed 11–5–02; 8:45 am]

BILLING CODE 4210–62–P

DEPARTMENT OF HOUSING AND URBAN DEVELOPMENT

[Docket No. FR–4723–FA–04]

Announcement of Funding Awards for Fiscal Year 2002 Historically Black Colleges and Universities Program

AGENCY: Office of the Assistant Secretary for Policy Development and Research, HUD.

ACTION: Announcement of funding awards.

SUMMARY: In accordance with section 102(a)(4)(C) of the Department of Housing and Urban Development Reform Act of 1989, this document notifies the public of funding awards for Fiscal Year 2002 Historically Black Colleges and Universities Program. The purpose of this document is to announce the names, addresses and the amount awarded to the winners to be used to help Historically Black Colleges and Universities (HBCUs) expand their role and effectiveness in addressing community development needs in their localities, consistent with the purposes of HUD's Community Development Block Grant program (CDBG).

FOR FURTHER INFORMATION CONTACT: Susan Brunson, Office of University Partnerships, U.S. Department of Housing and Urban Development, Room 8106, 451 Seventh Street, SW., Washington, DC 20410, telephone (202) 708–3061, ext. 3852. To provide service for persons who are hearing-or-speech-impaired, this number may be reached via TTY by Dialing the Federal Information Relay Service on 800–877–8339 or 202–708–1455. (Telephone number, other than ''800'' TTY numbers are not toll free.)

SUPPLEMENTARY INFORMATION: The Historically Black Colleges and Universities Program was enacted under section 107 of the CDBG appropriation for fiscal year 2002, as part of the ''Veterans Administration, HUD and Independent Agencies Appropriations Act of 2002'' and is administered by the Office of University Partnerships under the Assistant Secretary for Policy Development and Research. In addition to this program, the Office of University Partnerships administers HUD's ongoing grant programs to institutions of higher education as well as creates initiatives through which colleges and universities can bring their traditional missions of teaching, research, service, and outreach to bear on the pressing local problems in their communities.

The HBCU Program provides funds for a wide range of CDBG-eligible activities including housing rehabilitation and financing, property demolition or acquisition, public facilities, economic development, business entrepreneurship, and fair housing programs.

The Catalog Federal Domestic Assistance number for this program is 14.237.

On March 26, 2002 (67 FR 13949), HUD published a Notice of Funding Availability (NOFA) announcing the availability of $10.5 million in Fiscal Year 2002 funds for the HBCU Program. The Department reviewed, evaluated, and scored the applications received based on the criteria in the NOFA. As a result, HUD has funded the applications below, in accordance with section 102(a)(4)(C) of the Department of Housing and Urban Development Reform Act of 1989 (103 Stat. 1987, 42 U.S.C. 3545), the Department is publishing details concerning the recipients of funding awards, as set forth below.

List of Awardees for Grant Assistance Under the FY 2002 Historically Black Program Funding Competition, by Institution, Address, and Grant Amount

Mid-Atlantic

1. Norfolk State University, Thomas Dawes, Community and Outreach Services, Norfolk State University, 700 Park Avenue, Norfolk, VA 23504. Grant: $500,000.

2. Hampton University, Department of Architecture, Hampton University, Hampton, VA 23668. Grant: $301,505.

3. Delaware State University, Dr. John N. Austin, School of Professional Studies and Management, Delaware State University, 1200 North Dupont Highway, Dover, DE 19901. Grant: $338,766.

Southeast/Caribbean

4. C.A. Fredd Technical College Campus of Shelton Community College, Branch Campus, Dr. Cordell Wynn, C.A. Fredd Technical College Campus of Shelton Community College, 3401 Martin Luther King, Jr. Blvd., Tuscaloosa, AL 35401. Grant: $549,990.

5. Stillman College, Dr. Eddie B. Thomas, Stillman College, 3600 Tuscaloosa Blvd., Tuscaloosa, AL 35403. Grant: $524,790.

6. Benedict College, Larry Salley, Benedict College, 1600 Harden Street, Columbia, SC 29204. Grant: $500,000.

7. South Carolina State University, Charles Q. Artis, South Carolina State University, 300 College Street, NE, Orangeburg, SC 29115. Grant: $549,945.

8. LeMoyne-Owen College, Jeffrey Higgs, LeMoyne-Owen College, 802 Walker Avenue, Suite 5, Memphis, TN 38126. Grant: $549,062.

9. Fisk University, Debbie Frank, Fisk University, 1000 17th Avenue North, Nashville, TN 37208. Grant: $550,000.

10.Morehouse College, Shirley Williams, Morehouse College, 830 Westview Drive, SW, Atlanta, GA 30314. Grant: $526,414.

11. North Carolina A&T State University, Valerie Howard, Department of Construction Management and Safety, North Carolina A& T State University, 1601 East Market Street, Greensboro, NC 27411. Grant: $548,000.

12. North Carolina Central University, Tyrone Eaton, Office of Research Programs, North Carolina Central University, 1801 Fayetteville Street, Durham, NC 27707. Grant: $549,479.

13. Gadsden State Community College, Dr. Brenda Crowe, Institutional Advancement and Community Services, Gadsden State Community College, P.O. Box 227, 1001 George Wallace Drive, Gadsden, AL 35902–0227. Grant: $424,000.

14. Florida A&M University, Thomas D. Pugh, Florida A&M University, 400 Foote Hilyer, Administration Center, Tallahassee, FL 32307. Grant: $542,674.

15. Rust College, David L. Beckley, Rust College, 150 East Rust Avenue, Holly Springs, MS 38635. Grant: $550,000.

16. Alcorn State University, Brenda T. Buck, Center for Rural Life and Economic Development, Alcorn State University, 1000 ASU Drive, #210, Alcorn State, MS 39096. Grant: $497,929.

Southwest

17. Dillard University, Dr. Edwina Frank, Research and Sponsored Programs, Dillard University, 2601 Gentilly Blvd., New Orleans, LA 70122. Grant: $550,000.

18. Southern University and A&M College, Dr. Alma Thornton, Center for Social Research, Southern University and A&M College, P.O. Box 9503, S.U.

Branch, Baton Rouge, LA 70813–9503. Grant: $550,000.

19. Southern University At Shreveport, Jeanette H. Williams, Southern University At Shreveport, 3050 Martin Luther King Jr. Boulevard, Shreveport, LA 71107. Grant: $322,211.

20. Jarvis Christian College, Dr. Richard Groepper, Jarvis Christian College, P.O. Box 1470, Hawkins, TX 75765. Grant: $338,274.

21. Paul Quinn College, Dwight Fennell, Paul Quinn College, 3837 Simpson Stuart Road, Dallas, TX 75241. Grant: $550,000.

22. University of Arkansas at Pine Bluff, Henry Golatt, University of Arkansas at Pine Bluff, 1200 North University Drive, Mail Slot 4943, Pine Bluff, AR 71601. Grant: $368,330.

Dated: October 23, 2002.

Harold Bunce,

Deputy Assistant Secretary for Economic Affairs.

[FR Doc. 02–28123 Filed 11–4–02; 8:45 am]

BILLING CODE 4210–62–P

DEPARTMENT OF HOUSING AND URBAN DEVELOPMENT

[Docket No. FR–4723–FA–20]

Announcement of Funding Awards for Fiscal Year 2002 Tribal Colleges and Universities Program

AGENCY: Office of the Assistant Secretary for Policy Development and Research, HUD.

ACTION: Announcement of funding awards.

SUMMARY: In accordance with section 102 (a)(4)(C) of the Department of Housing and Urban Development Reform Act of 1989, this document notifies the public of funding awards for Fiscal Year 2002 Tribal Colleges and Universities Program. The purpose of this document is to announce the names and addresses of the award winners and the amount of the awards which are to be used to enable tribal colleges and universities to build, expand, renovate, and equip their own facilities, especially those that are available to and used by the larger community.

FOR FURTHER INFORMATION CONTACT: Susan Brunson, Office of University Partnerships, Department of Housing and Urban Development, Room 8106, 451 Seventh Street, SW., Washington, DC 20410, telephone (202) 708–3061, ext. 3852. To provide service for persons who are hearing-or-speech-impaired, this number may be reached via TTY by Dialing the Federal Information Relay Service on 800–877–8339 or 202–708–1455 (Telephone number, other than ''800'' TTY numbers are not toll free).

SUPPLEMENTARY INFORMATION: The Tribal Colleges and Universities Program was enacted under section 107 of the CDBG appropriation for fiscal year 2002, as part of the ''Veterans Administration, HUD and Independent Agencies Appropriations Act of 2002'' and is administered by the Office of University Partnerships under the Assistant Secretary for Policy Development and Research. In addition to this program, the Office of University Partnerships administers HUD's ongoing grant programs to institutions of higher education as well as creates initiatives through which colleges and universities can bring their traditional missions of teaching, research, service, and outreach to bear on the pressing local problems in their communities.

The Tribal Colleges and Universities Program assist tribal colleges and universities to build, expand, renovate, and equip their own facilities. On March 26, 2002 (67 FR 13993), HUD published a Notice of Funding Availability (NOFA) announcing the availability of $3 million in Fiscal Year 2002 funds for the Tribal Colleges and Universities Program. The Department reviewed, evaluated and scored the applications received based on the criteria in the NOFA. As a result, HUD eight applications were funded.

The Catalog Federal Domestic Assistance number for this program is 14.519.

In accordance with section 102(a)(4)(C) of the Department of Housing and Urban Development Reform Act of 1989 (103 Stat. 1987, 42 U.S.C. 3545), the Department is publishing details concerning the recipients of funding awards, as follows

List of Awardees for Grant Assistance Under the FY 2002 Tribal Colleges and Universities Program Funding Competition, by Institution, Address, and Grant Amount

Rocky Mountains

1. Fort Peck Community College, Warren Means, Fort Peck Community College, P.O. Box 398, Polar, MT 59255. *Grant:* $400,000.

2. Si Tanka College, Robert Hall, Si Tanka College, P.O. Box 220, Eagle Butte, SD 57652. *Grant:* $400,000.

3. Sisseton Wahpeton Community College, Dr. William Bray, Sisseton Wahpeton Community College, BIA Road 700, Box 689, Agency Village, SD 57268. *Grant:* $399,885.

4. Stone Child College, Edward Stamper, Stone Child College, RRI Box 1088, Box Elder, MT 59521. *Grant:* $400,000.

5. Cankdeska Cikana Community College, Walter R. Hollified, Cankdeska Cikana Community College, P.O. Box 269, Fort Totten, ND 58835. *Grant:* $400,000.

Midwest

6. Keweenaw Bay Ojibwa Community College, Treneice Marshall, Keweenaw Bay Ojibwa Community College, 409 Superior, P.O. Box 519, Baraga, MI 49908. *Grant:* $400,000.

7. Fond du Lac Tribal and Community College, Dawn Newman, Fond du Lac Tribal Community College, 2101 14th Street, Cloquet, MN 55720. *Grant:* $200,000.

Great Plains

8. Little Priest Tribal College, Ann Downs, Little Priest Tribal College, 601 East College Drive, Winnebago, NE 68071. *Grant:* $400,000.

Dated: October 23, 2002.

Harold L. Bunce,

Deputy Assistant Secretary for Economic Affairs.

[FR Doc. 02–28127 Filed 11–5–02; 8:45 am]

BILLING CODE 4210–62–P

DEPARTMENT OF THE INTERIOR

Bureau of Land Management

[OR–130–1020–PF; GP3–0022]

Notice of Resource Advisory Council Meeting

AGENCY: Bureau of Land Management, Interior.

ACTION: Notice of public meeting.

SUMMARY: In accordance with the Federal Land Policy and Management Act (FLPMA) and the Federal Advisory Committee Act of 1972 (FACA), the U.S. Department of the Interior, Bureau of Land Management (BLM) Eastern Washington Resource Advisory Council (RAC), will meet as indicated below.

DATES: The meeting will be held November 20, 2002, in the conference room of the Spokane District BLM Office, beginning at 9 a.m. The public comment period will begin at approximately 11:30 a.m. and the meeting will adjourn at approximately 4 p.m.

SUPPLEMENTARY INFORMATION: The 15-member Council advises the Secretary of the Interior, through the Bureau of Land Management, on a variety of planning and management issues associated with public land management in Eastern Washington. At this meeting, topics we plan to discuss include:

District land exchanges
Orientation of new members
National video downlink, and other topics the council may raise.

All meetings are open to the public. The public may present written comments to the Council. Each formal Council meeting will also have time allocated for hearing public comments. Depending on the number of persons wishing to comment and time available, the time for individual oral comments may be limited. Individuals who plan to attend and need special assistance, such as sign language interpretation, tour transportation or other reasonable accommodations, should contact the BLM as provided below

FOR FURTHER INFORMATION CONTACT: Kathy Helm, Bureau of Land Management, Spokane District Office, 1103 N. Fancher Road, Spokane, Washington, 99212, or call (509) 536–1200.

Dated: October 31, 2002.

Joseph K. Buesing,

District Manager.

[FR Doc. 02–28151 Filed 11–5–02; 8:45 am]

BILLING CODE 4310–33–P

DEPARTMENT OF THE INTERIOR

Minerals Management Service

Agency Information Collection Activities: Proposed Collection; Comment Request

AGENCY: Minerals Management Service (MMS), Interior.

ACTION: Notice of extension of an information collection (1010–0048).

SUMMARY: To comply with the Paperwork Reduction Act of 1995 (PRA), we are inviting comments on a collection of information that we will submit to the Office of Management and Budget (OMB) for review and approval. The information collection request (ICR) concerns the paperwork requirements in the regulations under 30 CFR 251, ''Geological and Geophysical (G&G) Explorations of the Outer Continental Shelf.''

DATE: Submit written comments by January 6, 2003.

ADDRESSES: Mail or hand carry comments to the Department of the Interior; Minerals Management Service; Attention: Rules Processing Team, Mail Stop 4024, 381 Elden Street, Herndon, Virginia 20170–4817. If you wish to e-mail comments, the address is: *rules.comments@mms.gov.* Reference ''Information Collection 1010–0048'' in your e-mail subject line and mark your message for return receipt. Include your name and return address in your message.

FOR FURTHER INFORMATION CONTACT: Alexis London, Rules Processing Team, (703) 787–1600. You may also contact Alexis London to obtain a copy, at no cost, of the regulations that require the subject collection of information.

SUPPLEMENTARY INFORMATION:

Title: 30 CFR Part 251, Geological and Geophysical (G&G) Explorations of the Outer Continental Shelf.

OMB Control Number: 1010–0048.

Abstract: The Outer Continental Shelf (OCS) Lands Act, as amended (43 U.S.C. 1331 *et seq.* and 43 U.S.C. 1801 *et seq.*), authorizes the Secretary of the Interior (Secretary) to prescribe rules and regulations to administer leasing of the OCS. Such rules and regulations will apply to all operations conducted under a lease. Operations on the OCS must preserve, protect, and develop oil and natural gas resources in a manner that is consistent with the need to make such resources available to meet the Nation's energy needs as rapidly as possible; to balance orderly energy resource development with protection of human, marine, and coastal environments; to ensure the public a fair and equitable return on the resources of the OCS; and to preserve and maintain free enterprise competition.

The OCS Lands Act (43 U.S.C. 1340) also states that ''any person authorized by the Secretary may conduct geological and geophysical explorations in the [O]uter Continental Shelf, which do not interfere with or endanger actual operations under any lease maintained or granted pursuant to this OCS Lands Act, and which are not unduly harmful to aquatic life in such area.'' The section further requires that permits to conduct such activities may only be issued if it is determined that the applicant is qualified; the activities are not polluting, hazardous, or unsafe; they do not interfere with other users of the area; and do not disturb a site, structure, or object of historical or archaeological significance. Applicants for permits are required to submit form MMS–327 to provide the information necessary to evaluate their qualifications.

Regulations at 30 CFR part 251 implement these statutory requirements. We use the information to ensure there is no environmental degradation, personal harm or unsafe operations and conditions, damage to historical or archaeological sites, or interference with other uses; to analyze and evaluate preliminary or planned drilling activities; to monitor progress and activities in the OCS; to acquire G&G data and information collected under a Federal permit offshore; and to determine eligibility for reimbursement from the Government for certain costs. The information is necessary to determine if the applicants for permits or filers of notices meet the qualifications specified by the OCS Lands Act. The MMS uses information collected to understand the G&G characteristics of oil-and-gas bearing physiographic regions of the OCS. It aids the Secretary in obtaining a proper balance among the potentials for environmental damage, the discovery of oil and gas, and adverse impacts on affected coastal States. Information from permittees is necessary to determine the propriety and amount of reimbursement.

We will protect information from respondents considered proprietary under the Freedom of Information Act (5 U.S.C. 552) and its implementing regulations (43 CFR part 2) and under regulations at 30 CFR parts 250, 251, and 252. No items of a sensitive nature are collected. Responses are mandatory or required to obtain or retain a benefit.

Frequency: On occasion, annual; and as specified in permits.

Estimated Number and Description of Respondents: Approximately 150 Federal OCS permittees or notice filers.

Estimated Reporting and Recordkeeping ''Hour'' Burden: The currently approved annual reporting burden for this collection is 8,109 hours. The following chart details the individual components and respective hour burden estimates of this ICR. In calculating the burdens, we assumed that respondents perform certain requirements in the normal course of their activities. We consider these to be usual and customary and took that into account in estimating the burden.

BURDEN BREAKDOWN

Citation 30 CFR 251	Reporting and recordkeeping requirement	Hour burden
251.4(a), (b); 251.5(a), (b), (d); 251.6; Permit Forms.	Apply for permits (form MMS–327) to conduct G&G exploration, including deep stratigraphic tests.	6
251.4(b); 251.5(c), (d); 251.6	File notices to conduct scientific research activities, including notice to MMS prior to beginning and after concluding activities.	6
251.6(b) 251.7(b)(5)(iii)	Notify MMS if specific actions should occur; report archaeological resources. (No instances reported since 1982.).	1
251.7	Submit information on test drilling activities under a permit, including form MMS–123 burden included under 30 CFR 250 information collection approvals.	.....
251.7(c)	Enter into agreement for group participation in test drilling, including publishing summary statement; provide MMS copy of notice/list of participants. (No agreements submitted since 1989.).	1
251.7(d)	Submit bond on deep stratigraphic test—burden included under 30 CFR part 256 (1010–0006).	.....
251.8(a)	Request reimbursement for certain costs associated with MMS inspections. (No requests in many years. OCS Lands Act requires Government reimbursement.).	
251.8(b), (c)	Submit modifications to, and status/final reports on, activities conducted under a permit	8
251.9(c)	Notify MMS to relinquish a permit	1/2
251.10(c)	File appeals—burden included under 1010–0121	.....
251.11; 251.12	Notify MMS and submit G&G data/information collected under a permit and/or processed by permittees or 3rd parties, including reports, logs or charts, results, analyses, descriptions, etc.	4
251.13	Request reimbursement for certain costs associated with reproducing data/info	20
251.14(a)	Submit comments on MMS intent to disclose data/info. to the public	1
251.14(c)(2)	Submit comments on MMS intent to disclose data/info. to an independent contractor/agent.	1
251.14(c)(4)	Contractor/agent submit written commitment not to sell, trade, license, or disclose data/info. without MMS consent.	1
Part 251	General departure and alternative compliance requests not specifically covered elsewhere in part 251 regulations.	2
Permit Forms	Request extension of permit time period	1
Permit Forms	Retain G&G data/information for 10 years and make available to MMS upon request	1

Estimated Reporting and Recordkeeping ''Non-Hour Cost'' Burden: We have identified no cost burdens for this collection.

Public Disclosure Statement: The PRA (44 U.S.C. 3501, *et seq.*) provides that an agency may not conduct or sponsor a collection of information unless it displays a currently valid OMB control number. Until OMB approves a collection of information, you are not obligated to respond.

Comments: Before submitting an ICR to OMB, PRA section 3506(c)(2)(A) requires each agency ''* * * to provide notice * * * and otherwise consult with members of the public and affected agencies concerning each proposed collection of information * * *''. Agencies must specifically solicit comments to: (a) Evaluate whether the proposed collection of information is necessary for the agency to perform its duties, including whether the information is useful; (b) evaluate the accuracy of the agency's estimate of the burden of the proposed collection of information; (c) enhance the quality, usefulness, and clarity of the information to be collected; and (d) minimize the burden on the respondents, including the use of automated collection techniques or other forms of information technology.

Agencies must also estimate the ''non-hour cost'' burdens to respondents or recordkeepers resulting from the collection of information. Therefore, if you have costs to generate, maintain, and disclose this information, you should comment and provide your total capital and startup cost components or annual operation, maintenance, and purchase of service components. You should describe the methods you use to estimate major cost factors, including system and technology acquisition, expected useful life of capital equipment, discount rate(s), and the period over which you incur costs. Capital and startup costs include, among other items, computers and software you purchase to prepare for collecting information, monitoring, and record storage facilities. You should not include estimates for equipment or services purchased: (i) Before October 1, 1995; (ii) to comply with requirements not associated with the information collection; (iii) for reasons other than to provide information or keep records for the Government; or (iv) as part of customary and usual business or private practices.

We will summarize written responses to this notice and address them in our submission for OMB approval. As a result of your comments, we will make any necessary adjustments to the burden in our submission to OMB.

Public Comment Policy: Our practice is to make comments, including names and home addresses of respondents, available for public review during regular business hours. Individual respondents may request that we withhold their home address from the record, which we will honor to the extent allowable by law. There may be circumstances in which we would withhold from the record a respondent's identity, as allowable by the law. If you wish us to withhold your name and/or address, you must state this prominently at the beginning of your comment. However, we will not consider anonymous comments. We will make all submissions from organizations or businesses, and from individuals identifying themselves as representatives or officials of organizations or businesses, available for public inspection in their entirety.

MMS Information Collection Clearance Officer: Jo Ann Lauterbach, (202) 208–7744.

Dated: October 30, 2002.

John V. Mirabella,

Acting Chief, Engineering and Operations Division.

[FR Doc. 02–28210 Filed 11–5–02; 8:45 am]

BILLING CODE 4310–MR–P

DEPARTMENT OF THE INTERIOR

Minerals Management Service

Outer Continental Shelf (OCS) Policy Committee of the Minerals Management Advisory Board; Notice and Agenda for Meeting

AGENCY: Minerals Management Service, Interior.

ACTION: Notice of meeting.

SUMMARY: The OCS Policy Committee of the Minerals Management Advisory Board will meet at the Astor Crown Plaza New Orleans Hotel in New Orleans, Louisiana.

DATES: Wednesday, November 20, 2002, from 8:30 a.m. to 5 p.m. CST and Thursday, November 21, 2002, from 8:30 a.m. to 4 p.m CST.

ADDRESSES: The Astor Crown Plaza New Orleans Hotel, 739 Canal @ Bourbon, New Orleans, Louisiana 20170, telephone (504) 962–0500.

FOR FURTHER INFORMATION CONTACT: Ms. Jeryne Bryant at Minerals Management Service, 381 Elden Street, Mail Stop 4001, Herndon, Virginia 20170–4187. She can be reached by telephone at (703) 787–1211 or by electronic mail at *jeryne.bryant@mms.gov.*

SUPPLEMENTARY INFORMATION: The OCS Policy Committee represents the collective viewpoint of coastal States, environmental interests, industry and other parties involved with the OCS Program. It provides policy advice to the Secretary of the Interior through the Director of MMS on all aspects of leasing, exploration, development, and protection of OCS resources.

The agenda for November 20 will cover the following principal subjects:

Congressional/Legislative Update. This presentation will provide an update on current congressional issues related to the OCS Program.

Global Energy. This presentation will address the varying positions on future supply and demand scenarios.

Future of Energy. This presentation will provide a futuristic perspective on energy.

OCS Scientific Committee Update. This presentation will provide an update on the activities of the Scientific Committee. It will highlight activities that are related to mercury, energy issues/concerns, ocean issues, hard mineral activities, and any other topics that are relevant to both Committees.

Alternative Use Legislation. This presentation will provide an update on legislation concerning offshore liquefied natural gas terminals and other energy-related uses of the OCS.

Methane Hydrate—Status of Technology. This presentation will address future energy supply from offshore methane hydrates.

Oil in the Seas III: Inputs, Fates and Effects. This presentation will provide an overview of the findings from the Oil in the Sea Report that was funded by MMS, Department of Energy, U.S. Geological Survey, Environmental Protection Agency, U.S. Coast Guard, U.S. Navy, American Petroleum Institute, and National Ocean Industries Association. The presentation will also compare the recent findings with the 1985 report.

National Marine Sanctuaries. This presentation will address national marine sanctuaries, their location and characteristics, and their relevance to oil and gas development.

The agenda for November 21 will cover the following principal subjects:

Hard Minerals Subcommittee Update. This presentation will provide an update on subcommittee activities and other pertinent hard minerals information.

Coastal Erosion/Restoration—Louisiana's Perspective. This presentation will address the State of Louisiana's coastal situation, with emphasis on adverse impacts caused by offshore operations and on restoration efforts. It will also address the socioeconomic effects in coastal communities (*i.e.*, Port Fourchon, Morgan City, and Abbeville).

Mercury Update. This panel discussion will provide an update on relevant MMS activities since the May 2002 Policy Committee meeting. It will include an overview of the activities of the Interagency Working Group on Methylmercury; a brief description of findings from a recent offshore Gulf of Mexico platform sampling activity; and a report from the Scientific Subcommittee on Mercury.

Benthic Communities Studies. This presentation will address the results of MMS's $5.33 million deepwater benthos study.

Ocean Commission. This presentation will provide a brief update on the U.S. Commission on Ocean Policy's activities since May 2002.

Archeological Finds in the Gulf. This presentation will address recent discoveries in the Gulf of Mexico that have generated international acclaim. The MMS, through its responsibilities under the National Historic Preservation Act, requires operators to conduct remote sensing surveys to avoid potential targets which may be historically significant.

Education and Outreach. This presentation will provide the Committee with an update on the Education and Outreach Subcommittee's activities since May 2002. It will also address Eric Smith's work with risk perception, factors that shape public opinion regarding energy extraction, and any other pertinent information that could assist the Subcommittee in working towards a report for the full Committee's review.

MMS Regional Updates. The Regional Directors will highlight activities off the California and Alaska coasts and the Gulf of Mexico.

The meeting is open to the public. Approximately 100 visitors can be accommodated on a first-come-first-served basis.

Upon request, interested parties may make oral or written presentations to the OCS Policy Committee. Such requests should be made no later than November 13, 2002, to Jeryne Bryant. Requests to make oral statements should be accompanied by a summary of the statement to be made. Please see **FOR FURTHER INFORMATION CONTACT** section for address and telephone number.

Minutes of the OCS Policy Committee meeting will be available for public inspection and copying at the MMS in Herndon, Virginia.

Authority: Federal Advisory Committee Act, Pub. L. 92–463, 5 U.S.C. Appendix 1, and the Office of Management and Budget's Circular No. A–63, Revised.

Dated: October 28, 2002.

Thomas A. Readinger,

Associate Director for Offshore Minerals Management.

[FR Doc. 02–28148 Filed 11–5–02; 8:45 am]

BILLING CODE 4310–MR–P

INTERNATIONAL TRADE COMMISSION

[Investigation No. 731–TA–1021 (Preliminary)]

Malleable Iron Pipe Fittings from China

AGENCY: International Trade Commission.

ACTION: Institution of antidumping investigation and scheduling of a preliminary phase investigation.

SUMMARY: The Commission hereby gives notice of the institution of an investigation and commencement of

preliminary phase antidumping investigation No. 731–TA–1021 (Preliminary) under section 733(a) of the Tariff Act of 1930 (19 U.S.C. 1673b(a)) (the Act) to determine whether there is a reasonable indication that an industry in the United States is materially injured or threatened with material injury, or the establishment of an industry in the United States is materially retarded, by reason of imports from China of malleable iron pipe fittings,[1] provided for in subheading 7307.19.90 of the Harmonized Tariff Schedule of the United States, that are alleged to be sold in the United States at less than fair value. Unless the Department of Commerce extends the time for initiation pursuant to section 732(c)(1)(B) of the Act (19 U.S.C. 1673a(c)(1)(B)), the Commission must reach a preliminary determination in antidumping investigations in 45 days, or in this case by December 16, 2002. The Commission's views are due at Commerce within five business days thereafter, or by December 23, 2002. For further information concerning the conduct of this investigation and rules of general application, consult the Commission's Rules of Practice and Procedure, part 201, subparts A through E (19 CFR part 201), and part 207, subparts A and B (19 CFR part 207).

EFFECTIVE DATE: October 30, 2002.

FOR FURTHER INFORMATION CONTACT: Christopher Cassise (202–708–5408), Office of Investigations, U.S. International Trade Commission, 500 E Street SW., Washington, DC 20436. Hearing-impaired persons can obtain information on this matter by contacting the Commission's TDD terminal on 202–205–1810. Persons with mobility impairments who will need special assistance in gaining access to the Commission should contact the Office of the Secretary at 202–205–2000. General information concerning the Commission may also be obtained by accessing its internet server (*http://www.usitc.gov*). The public record for this investigation may be viewed on the Commission's electronic docket (EDIS–ON–LINE) at *http://dockets.usitc.gov/eol/public.*

SUPPLEMENTARY INFORMATION:

Background.—This investigation is being instituted in response to a petition filed on October 30, 2002, by Anvil International, Inc., Portsmouth, NH, and Ward Manufacturing, Inc., Blossburg, PA.

Participation in the investigation and public service list.—Persons (other than petitioners) wishing to participate in the investigation as parties must file an entry of appearance with the Secretary to the Commission, as provided in sections 201.11 and 207.10 of the Commission's rules, not later than seven days after publication of this notice in the **Federal Register**. Industrial users and (if the merchandise under investigation is sold at the retail level) representative consumer organizations have the right to appear as parties in Commission antidumping investigations. The Secretary will prepare a public service list containing the names and addresses of all persons, or their representatives, who are parties to this investigation upon the expiration of the period for filing entries of appearance.

Limited disclosure of business proprietary information (BPI) under an administrative protective order (APO) and BPI service list.—Pursuant to section 207.7(a) of the Commission's rules, the Secretary will make BPI gathered in this investigation available to authorized applicants representing interested parties (as defined in 19 U.S.C. 1677(9)) who are parties to the investigation under the APO issued in the investigation, provided that the application is made not later than seven days after the publication of this notice in the **Federal Register**. A separate service list will be maintained by the Secretary for those parties authorized to receive BPI under the APO.

Conference.—The Commission's Director of Operations has scheduled a conference in connection with this investigation for 9:30 a.m. on November 20, 2002, at the U.S. International Trade Commission Building, 500 E Street SW., Washington, DC. Parties wishing to participate in the conference should contact Christopher Cassise (202–708–5408) not later than November 15, 2002, to arrange for their appearance. Parties in support of the imposition of antidumping duties in this investigation and parties in opposition to the imposition of such duties will each be collectively allocated one hour within which to make an oral presentation at the conference. A nonparty who has testimony that may aid the Commission's deliberations may request permission to present a short statement at the conference.

Written submissions.—As provided in sections 201.8 and 207.15 of the Commission's rules, any person may submit to the Commission on or before November 25, 2002, a written brief containing information and arguments pertinent to the subject matter of the investigation. Parties may file written testimony in connection with their presentation at the conference no later than three days before the conference. If briefs or written testimony contain BPI, they must conform with the requirements of sections 201.6, 207.3, and 207.7 of the Commission's rules. The Commission's rules do not authorize filing of submissions with the Secretary by facsimile or electronic means.

In accordance with sections 201.16(c) and 207.3 of the rules, each document filed by a party to the investigation must be served on all other parties to the investigation (as identified by either the public or BPI service list), and a certificate of service must be timely filed. The Secretary will not accept a document for filing without a certificate of service.

Authority: This investigation is being conducted under authority of title VII of the Tariff Act of 1930; this notice is published pursuant to section 207.12 of the Commission's rules.

By order of the Commission.

Issued: November 1, 2002.

Marilyn R. Abbott,

Secretary to the Commission.

[FR Doc. 02–28221 Filed 11–5–02; 8:45 am]

BILLING CODE 7020–02–P

[1] For purposes of this investigation, ''malleable iron pipe fittings'' consists of malleable iron pipe and tube fittings, other than grooved fittings.

INTERNATIONAL TRADE COMMISSION

[Investigations Nos. 701–TA–426 and 731–TA–984–985 (Final)]

Sulfanilic Acid From Hungary and Portugal

Determinations

On the basis of the record[1] developed in the subject investigations, the United States International Trade Commission determines, pursuant to sections 705(b) and 735(b) of the Tariff Act of 1930 (19 U.S.C. 1671d(b) and 1673d(b)) (the Act), that an industry in the United States is materially injured by reason of imports from Hungary of sulfanilic acid, provided for in subheadings 2921.42.22 and 2921.42.90 of the Harmonized tariff Schedule of the United States, that have been found by the Department of Commerce to be subsidized by the Government of Hungary, and by reason of imports of sulfanilic acid from Hungary and Portugal that have been found by the Department of Commerce

[1] The record is defined in sec. 207.2(f) of the Commission's Rules of Practice and Procedure (19 CFR § 207.2(f)).

to be sold in the United States at less than fair value (LTFV).

Background

The Commission instituted these investigations effective September 28, 2001, following receipt of a petition filed with the Commission and Commerce by National Ford Chemical Co. of Fort Mill, SC. The final phase of the investigations was scheduled by the Commission following notification of preliminary determinations by Commerce that imports of sulfanilic acid from Hungary were being subsidized within the meaning of section 703(b) of the Act (19 U.S.C. 1671b(b)) and that imports of sulfanilic acid from Hungary and Portugal were being sold at LTFV within the meaning of section 733(b) of the Act (19 U.S.C. § 1673b(b)). Notice of the scheduling of the final phase of the Commission's investigations and of a public hearing to be held in connection therewith was given by posting copies of the notice in the Office of the Secretary, U.S. International Trade Commission, Washington, DC, and by publishing the notice in the **Federal Register** of May 21, 2002 (67 FR 35832).[2] The hearing was held in Washington, DC, on September 24, 2002, and all person who requested the opportunity were permitted to appear in person or by counsel.

The Commission transmitted its determination in these investigations to the Secretary of Commerce on November 1, 2002. The views of the Commission are contained in USITC Publication 3554 (November 2002), entitled Sulfanilic Acid from Hungary and Portugal: Investigations Nos. 701–TA–426 and 731–TA–984–985 (Final).

Issued: November 1, 2002.

By order of the Commission.

Marilyn R. Abbott,

Secretary to the Commission.

[FR Doc. 02–28220 Filed 11–5–02; 8:45 am]

BILLING CODE 7020–02–P

[2] A revised final phase schedule was published in the **Federal Register** of June 6, 2002 (67 FR 39041).

DEPARTMENT OF JUSTICE

Notice of Lodging of Consent Decree and Stipulation of Settlement and Order of Dismissal Under the Comprehensive Environmental Response, Compensation and Liability Act

Notice is hereby given that on October 15, 2002, two proposed settlement agreements were lodged with the United District Court of Northern District of Indiana in the matter of *United States* v. *American Standard, Inc. et al.*, Civil No. 3:01CV0513RM. One proposed agreement is titled ''Consent Decree with Group Defendants and Other Potentially Responsible Persons for Recovery of Past Response Costs'' (''Consent Decree'') and the other is titled ''Stipulation of Settlement and Order of Dismissal Between United States and Exide Corporation'' (''Stipulation of Settlement'').

In its Complaint, the United States seeks to recover response costs incurred by the United States in connection with the Four County Landfill Site in Fulton County, Indiana (the ''Site''). The complaint alleges that the United States undertook response actions as a result of releases or threatened releases of hazardous substances at the Site, and that the defendants named in the complaint were jointly and severally liable for the costs of such response actions.

Under the proposed Consent Decree, a group of ten defendants (along with 28 additional parties who allegedly contributed hazardous wastes to the Site) will pay $213,915 to the Hazardous Substances Superfund as partial reimbursement of response costs that the United States paid in connection with the Site through April 30, 2002. Under the proposed Stipulation of Settlement, Exide has agreed to the entry of judgment against it for $35,405 in settlement of the United States' claims for recovery of response cost that the United States paid in connection with the Site through May 2, 2002. Exide filed a voluntary petition for bankruptcy in the United States Bankruptcy Court for the District of Delaware on April 15, 2000, which was docketed as *In Re Exide Technologies, et al.*, Bankruptcy No 02–11125. Under the terms of the Stipulation of Settlement, the United States shall be allowed a general unsecured claim in the bankruptcy proceeding for the agreed judgment amount of $35,405. Only the amount of cash received by Environmental Protection Agency (''EPA'') on its general unsecured claim shall be credited by EPA to the Hazardous Substance Superfund.

The Department of Justice will receive, for a period of thirty (30) days from the date of this publication, comments relating to the proposed Consent Decree and the proposed Stipulation of Settlement. Comments should be addressed to the Assistant Attorney General, Environmental and Natural Resources Division, PO Box 7611, U.S. Department of Justice, Washington, DC 20044–7611, and should refer to *United States* v. *American Standard, Inc., et al.*, D.J. Ref. 90–11–3–07510.

The proposed Consent Decree and the proposed Stipulation of Settlement may be examined at the Office of the United States Attorney, 204 S. Main Street, South Bend, Indiana, 46601, and at U.S. EPA Region 5, 77 West Jackson Boulevard, Chicago, Illinois, 60604. A copy of the proposed Consent Decree, the proposed Stipulation of Settlement, or both, may also be obtained by mail from the Consent Decree Library, P.O. Box 7611, U.S. Department of Justice, Washington, DC 20044–7611 or by faxing a request to Tonia Fleetwood, fax no. (202) 514–0097, phone confirmation number (202) 514–1547. In requesting a copy of the Consent Decree, please enclose a check in the amount of $7.25 (25 cents per page reproduction cost) payable to the U.S. Treasury. In requesting a copy of the Stipulation of Settlement, please enclose a check of $5.75 (25 cents per page) payable to the U.S. Treasury.

William D. Brighton,

Assistant Chief, Environmental Enforcement Section, Environment and Natural Resources Division.

[FR Doc. 02–28239 Filed 11–5–02; 8:45 am]

BILLING CODE 4410–15–M

DEPARTMENT OF JUSTICE

Notice of Lodging of Consent Decree Under the Clean Air Act and the Emergency Planning and Community Right-To-Know Act

Under 28 CFR 50.7, notice is hereby given that on October 21, 2002, a proposed Consent Decree (''Consent Decree'') in *United States* v. *Color Communications, Inc.,* Civil Action No. 99 C 4489, was lodged with the United States District Court for the Northern District of Illinois.

The United States' complaint in this action asserts claims against Color Communications, Inc. (''CCI'') for injunctive relief and civil penalties for violations of the Clean Air Act, 42 U.S.C. 7401 *et seq.* (''CAA''), and applicable provisions of a Federal Implementation Plan and a State Implementation Plan governing sources that emit volatile organic materials to the ambient air within the Chicago Metropolitan Area Ozone Non Attainment Area. The complaint also alleges that CCI failed to comply with the reporting requirements of the Emergency Planning and Community Right-to-Know Act, 42 U.S.C. 11001 *et seq.* (''EPCRA'') The State of Illinois intervened as a plaintiff in this action and asserted additional claims against

CCI. Since the action was filed, CCI implemented measures that brought its facility into compliance with requirements that were the subject of this action. As a result, the relief provided under the proposed Decree addresses the alleged liability of CCI for civil penalties for past violations of applicable requirements under the CAA and EPCRA. The Consent Decree requires CCI to pay civil penalties totalling $435,000, plus interest, to the United States and the Plaintiff-Intervenor State of Illinois, in three separate installments,the last of which will be due two years after entry of the Consent Decree. Of this amount, CCI will pay $243,931, plus interest, to the United States, and $191,069, plus interest, to the State of Illinois. In addition, the proposed Consent Decree provides for CCI to implement Supplemental Environmental Projects, including the surrender of certain Illinois emission trading credits that CCI received by reducing facility emissions below levels otherwise allowed by law.

The Department of Justice will receive for a period of thirty (30) days from the date of this publication comments relating to the Consent Decree. Comments should be addressed to the Assistant Attorney General, Environment and Natural Resources Division, PO Box 7611, U.S. Department of Justice, Washington, DC 20444–7611, and should refer to *United States* v. *Color Communications, Inc.,* D.J. Ref. 90–5–2–1–2105.

The Consent Decree may be examined at the Office of the United States Attorney, 219 South Dearborn Street, Chicago, IL 60604, and at U.S. EPA Region 5, 77 West Jackson Boulevard, Chicago, IL 60604. A copy of the Consent Decree may also be obtained by mail from the Consent Decree Library, PO Box 7611, U.S. Department of Justice, Washington, DC 20044–7611 or by faxing a request to Tonia Fleetwood, fax no. (202) 514–0097, phone confirmation number (202) 514–1547. In requesting a copy, please enclose a check in the amount of $5.50 (25 cents per page reproduction cost) payable to the U.S. Treasury.

William D. Brighton,

Assistant Chief, Environmental Enforcement Section, Environment and Natural Resources Division.

[FR Doc. 02–28238 Filed 11–5–02; 8:45 am]

BILLING CODE 4410–15–M

DEPARTMENT OF JUSTICE

Antitrust Division

Notice Pursuant to the National Cooperative Research and Production Act of 1993—AAF Association, Inc.

Notice is hereby given that, on September 17, 2002, pursuant to section 6(a) of the National Cooperative Research and Production Act of 1993, 15 U.S.C. 4301 *et seq.* (''the Act''), AAF Association, Inc. has filed written notifications simultaneously with the Attorney General and the Federal Trade Commission disclosing changes in its membership status. The notifications were filed for the purpose of extending the Act's provisions limiting the recovery of antitrust plaintiffs to actual damages under specified circumstances. Specifically, Adobe Systems, Inc., San Jose, CA; Cakewalk, Boston, MA; da vinci Systems, Inc., Coral Springs, FL; Nucoda, London, England, United Kingdom; and the Post Group, Hollywood, CA have been added as parties to this venture. The following member has changed its name: techmath AG to blue order, Inc., Kaiserlautern, Germany. Grass Valley Group, Beaverton, OR was acquired by Thomson multimedia, Inc., Boulogne, cedex, France and will continue under the name of Thomson Valley Group. Also, Ascential Software, Oakland, CA; eMotion, Inc., Los Angeles, CA; and Omneon Video Networks, Sunnyvale, CA have been dropped as parties to this venture.

No other changes have been made in either the membership or planned activity of the group research project. Membership in this group research project remains open, and AAF Association, Inc. intends to file additional written notification disclosing all changes in membership.

On March 28, 2000, AAF Association, Inc. filed its original notification pursuant to section 6(a) of the Act. The Department of Justice published a notice in the **Federal Register** pursuant to section 6(b) of the Act on June 29, 2000 (65 FR 40127).

The last notification was filed with the Department on June 13, 2002. A notice was published in the **Federal Register** pursuant to section 6(b) of the Act on July 25, 2002 (67 FR 48670).

Constance K. Robinson,

Director of Operations, Antitrust Division.

[FR Doc. 02–28142 Filed 11–5–02; 8:45 am]

BILLING CODE 4410–11–M

DEPARTMENT OF JUSTICE

Antitrust Division

Notice Pursuant to the National Cooperative Research and Production Act of 1993—IMS Global Learning Consortium, Inc.

Notice is hereby given that, on September 16, 2002, pursuant to section 6(a) of the National Cooperative Research and Production Act of 1993, 15 U.S.C. 4301 *et seq.* (''the Act''), IMS Global Learning Consortium, Inc. has filed written notifications simultaneously with the Attorney General and the Federal Trade Commission disclosing changes in its membership status. The notifications were filed for the purpose of extending the Act's provisions limiting the recovery of antitrust plaintiffs to actual damages under specified circumstances. Specifically, Fretwell Downing Informatics, Sheffield, England, United Kingdom; Texas Instruments, Inc., Dallas, TX; and The Open University, Milton Keyes, England, United Kingdom have been added as parties to this venture. Also NYUOnline, Inc., New York, NY has been dropped as a party to this venture.

No other changes have been made in either the membership or planned activity of the group research project. Membership in this group research project remains open, and IMS Global Learning Consortium, Inc. intends to file additional written notification disclosing all changes in membership.

On April 7, 2000, IMS Global Learning Consortium, Inc. filed its original notification pursuant to Section 6(a) of the Act. The Department of Justice published a notice in the **Federal Register** pursuant to section 6(b) of the Act on September 13, 2000 (65 FR 55283).

The last notification was filed with the Department on June 26, 2002. A notice was published in the **Federal Register** pursuant to section 6(b) of the Act on August 13, 2002 (67 FR 52744).

Constance K. Robinson,

Director of Operations, Antitrust Division.

[FR Doc. 02–28146 Filed 11–5–02; 8:45 am]

BILLING CODE 4410–11–M

DEPARTMENT OF JUSTICE

Antitrust Division

Notice Pursuant to the National Cooperative Research and Production Act of 1993—J Consortium, Inc.

Notice is hereby given that, on August 28, 2002, pursuant to section 6(a) of the

National Cooperative Research and Production Act of 1993, 15 U.S.C. 4301 *et seq.* (''the Act''), J Consortium, Inc. has filed written notifications simultaneously with the Attorney General and the Federal Trade Commission disclosing changes in its membership status. The notifications were filed for the purpose of extending the Act's provisions limiting the recovery of antitrust plaintiffs to actual damages under specified circumstances. Specifically, Advanced Electronic Design, Massy, France has been added as a party to this venture. Also, A. Sh. Burhan (individual member), Lahore, Punjab, India; Gunukula Srikanth (individual member), Reddy, Nalgonda, India; M P Vikram (individual member), Karnataka, India; and Advantisys, Upland, CA have been dropped as parties to this venture.

No other changes have been made in either the membership or planned activity of the group research project. Membership in this group research project remains open, and J Consortium, Inc. intends to file additional written notification disclosing all changes in membership.

On August 6, 1999, J Consortium, Inc. filed its original notification pursuant to section 6(a) of the Act. The Department of Justice published a notice in the **Federal Register** pursuant to section 6(b) of the Act on March 21, 2000 (65 FR 15175).

The last notification was filed with the Department on May 30, 2002. A notice was published in the **Federal Register** pursuant to section 6(b) of the Act on June 27, 2002 (67 FR 43343).

Constance K. Robinson,

Director of Operations, Antitrust Division.

[FR Doc. 02–28141 Filed 11–5–02; 8:45 am]

BILLING CODE 4410–11–M

DEPARTMENT OF JUSTICE

Antitrust Division

Notice Pursuant to the National Cooperative Research and Production Act of 1993—PKI Forum, Inc.

Notice is hereby given that, on September 5, 2002, pursuant to section 6(a) of the National Cooperative Research and Production Act of 1993, 15 U.S.C. 4301 *et seq.* (''the Act''), PKI Forum, Inc. has filed written notifications simultaneously with the Attorney General and the Federal Trade Commission disclosing changes in its membership status. The notifications were filed for the purpose of extending the Act's provisions limiting the recovery of antitrust plaintiffs to actual damages under specified circumstances. Specifically, Asia PKIForum, Tokyo, JAPAN has been added as a party to this venture. Also, Btexact Technologies, Ipswich, United Kingdom; CertCo, New York, NY; Communications Electronics Security Group, Cheltenham, Gloucestershire, United Kingdom; Deutsche Post Sign Trust GmbH, Bonn, Germany; Giesecke & Devrient, Munich, Germany; Mimos Berhard, Kuala Lumpur, Malaysia; nCipher, Inc., Woburn, MA; NEC Corporation, Tokyo, Japan; TC TrustCenter GmbH, Hamburg, Germany; U.S. Postal Services Headquarters, Washington, DC; and ValiCert, Mountain View, CA have been dropped as parties to this venture.

No other changes have been made in either the membership or planned activity of the group research project. Membership in this group research project remains open, and PKI Forum, Inc. intends to file additional written notification disclosing all changes in membership.

On April 2, 2001, PKI Forum, Inc. filed its original notification pursuant to section 6(a) of the Act. The Department of Justice published a notice in the **Federal Register** pursuant to section 6(b) of the Act on May 3, 2001 (66 FR 22260).

The last notification was filed with the Department on June 10, 2002. A notice was published in the **Federal Register** pursuant to section 6(b) of the Act on June 27, 2002 (67 FR 43343).

Constance K. Robinson,

Director of Operations, Antitrust Division.

[FR Doc. 02–28143 Filed 11–5–02; 8:45 am]

BILLING CODE 4411–10–M

DEPARTMENT OF JUSTICE

Antitrust Division

Notice Pursuant to the National Cooperative Research and Production Act of 1993—Portland Cement Association

Notice is hereby given that, on October 1, 2002, pursuant to Section 6(a) of the National Cooperative Research and Production Act of 1993, 15 U.S.C. 4301 *et seq.* (''the Act''), Portland Cement Association has filed written notifications simultaneously with the Attorney General and the Federal Trade Commission disclosing changes in its membership status. The notifications were filed for the purpose of extending the Act's provisions limiting the recovery of antitrust plaintiffs to actual damages under specified circumstances. Specifically, National Cement Company, Inc., Encino, CA; National Cement Company of Alabama, Inc., Birmingham, AL; and National Cement Company of California, Inc., Encino, CA have been added as parties to this venture. Also, FMSC Group Inc., Bethlehem, PA (an Associate Member) has been dropped as a party to this venture.

No other changes have been made in either the membership or planned activity of the group research project. Membership in this group research project remains open, and Portland Cement Association intends to file additional written notification disclosing all changes in membership.

On January 7, 1985, Portland Cement Association filed its original notification pursuant to Section 6(a) of the Act. The Department of Justice published a notice in the **Federal Register** pursuant to Section 6(b) of the Act on February 5, 1985 (50 FR 5015).

The last notification was filed with the Department on July 22, 2002. A notice was published in the **Federal Register** pursuant to Section 6(b) of the Act on August 13, 2002 (67 FR 52745).

Constance K. Robinson,

Director of Operations, Antitrust Division.

[FR Doc. 02–28139 Filed 11–5–02; 8:45 am]

BILLING CODE 4410–11–M

DEPARTMENT OF JUSTICE

Antitrust Division

Notice Pursuant to the National Cooperative Research and Production Act of 1993—Rotorcraft Industry Technology Association, Inc. (''RITA'')

Notice is hereby given that, on September 27, 2002, pursuant to Section 6(a) of the National Cooperative Research and Production Act of 1993, 15 U.S.C. 4301 *et seq.* (''the Act''), Rotorcraft Industry Technology Association, Inc. (''RITA'') has filed written notifications simultaneously with the Attorney General and the Federal Trade Commission disclosing changes in its membership and production status. The notification were filed for the purpose of extending the Act's provisions limiting the recovery of antitrust plaintiffs to actual damages under specified circumstances. Specifically, The University of Michigan, Ann Arbor, MI and Syracuse University, Syracuse, NY have been added as parties to this venture; and Kaman Aerospace Corporation, Bloomfield, CT has changed its membership status from Supporting Member to Principal Member. Additionally, RITA has entered into a Technology Investment Agreement with

the U.S. Army Aviation and Applied Technology Directorate, on behalf of the U.S. Government, on February 23, 2002.

No other changes have been made in either the membership or planned activity of the group research project. Membership in this group research project remains open, and RITA intends to file additional written notification disclosing all changes in membership.

On September 28, 1995, RITA filed its original notification pursuant to Section 6(a) of the Act. The Department of Justice published a notice in the **Federal Register** pursuant to Section 6(b) of the Act on April 3, 1996 (61 FR 14817).

The last notification was filed with the Department of March 22, 2001. A notice was published in the **Federal Register** pursuant to Section 6(b) of the Act on April 24, 2001 (66 FR 20686).

Constance K. Robinson,

Director of Operations, Antitrust Division.

[FR Doc. 02–28138 Filed 11–9–02; 8:45 am]

BILLING CODE 4410–11–M

DEPARTMENT OF JUSTICE

Antitrust Division

Notice Pursuant to the National Cooperative Research and Production Act of 1993—Salutation Consortium, Inc.

Notice is hereby given that, on September 17, 2002, pursuant to section 6(a) of the National Cooperative Research and Production Act of 1993, 15 U.S.C. 4301 *et seq.* (''the Act'') Salutation Consortium, Inc. has filed written notifications simultaneously with the Attorney General and the Federal Trade Commission disclosing changes in its membership status. The notifications were filed for the purpose of extending the Act's provisions limiting the recovery of antitrust plaintiffs to actual damages under specified circumstances. Specifically, Richard Chen Xiaondong (individual member), Singapore, Singapore; and Institute of Certified E-Commerce Consultants, Amman, Jordan have been added as parties to this venture.

No other changes have been made in either the membership or planned activity of the group research project. Membership in this group research project remains open, and Salutation Consortium, Inc. intends to file additional written notification disclosing all changes in membership.

On March 30, 1995, Salutation Consortium, Inc. filed its original notification pursuant to Section 6(a) of the Act on August 13, 2002 (67 FR 52745).

The last notification was filed with the Department on July 3, 2002. A notice was published in the **Federal Register** pursuant to section 6(b) of the Act on August 13, 2002 (67 FR 52745).

Constance K. Robinson,

Director of Operations, Antitrust Division.

[FR Doc. 02–28145 Filed 11–5–02; 8:45 am]

BILLING CODE 4410–11–M

DEPARTMENT OF JUSTICE

Antitrust Division

Notice Pursuant to the National Cooperative Research and Production Act of 1993—Investigation of Soot Removal Testing Methods for Automotive Applications

Notice is hereby given that, on September 23, 2002, pursuant to section 6(a) of the National Cooperative Research and Production Act of 1993, 15 U.S.C. 4301 *et seq.* (''the Act''), Southwest Research Institute (''SwRI'') has filed written notifications simultaneously with the Attorney General and the Federal Trade Commission disclosing (1) the identities of the parties and (2) the nature and objectives of the venture. The notifications were filed for the purpose of invoking the Act's provisions limiting the recovery of antitrust plaintiffs to actual damages under specified circumstances. Pursuant to section 6(b) of the Act, the identities of the parties are Baldwin Filters, Kearney, NE; Caterpillar, Inc., Mossville, IL; Champion Laboratories, Inc., West Salem, IL; Dana Corporation/Wix Filtration, Gastonia, NC; Donaldson Company, Inc., Minneapolis, MN; Filterwerk Mann+Hummel GmbH, Ludwigsbury, Germany; and Honeywell, Perrysburg, OH. The nature and objectives of the venture is to define soot removal test method(s), test contaminant, and analytical methods. The program will also refine an existing technique for producing synthetic soot, determine repeatability of synthetic soot generation, and define and refine soot removal testing method design and methodology.

Membership in this research group remains open, and the participants intend to file additional written notification disclosing all changes in membership or planned activities.

Constance K. Robinson,

Director of Operations, Antitrust Division.

[FR Doc. 02–28140 Filed 11–5–02; 8:45 am]

BILLING CODE 4410–11–M

DEPARTMENT OF JUSTICE

Antitrust Division

Notice Pursuant to the National Cooperative Research and Production Act of 1993—Zyvex

Notice is hereby given that, on August 28, 2002, pursuant to section 6(a) of the National Cooperative Research and Production Act of 1993, 15 U.S.C. 4301 *et seq.* (''the Act''), Zyvex has filed written notifications simultaneously with the Attorney General and the Federal Trade Commission disclosing (1) the identities of the parties and (2) the nature and objectives of the venture. The notifications were filed for the purpose of invoking the Act's provisions limiting the recovery of antitrust plaintiffs to actual damages under specified circumstances. Pursuant to section 6(b) of the Act, the identifies of the parties are Zyvex Corporation, Richardson, TX; and Honeywell International, Redmond, WA. The nature and objectives of the venture are to develop and demonstrate low-cost, computer controlled, microscale components, with extension of this technology to nanoscale assemblers for the commercialization of nanotechnology. The activities of this joint venture will be partially funded by an award from the Advanced Technology Program, National Institute of Standards and Technology, Department of Commerce.

Constance K. Robinson,

Director of Operations, Antitrust Division.

[FR Doc. 02–28144 Filed 11–4–02; 8:45 am]

BILLING CODE 4410–11–M

DEPARTMENT OF JUSTICE

National Institute of Corrections

Solicitation for a Cooperative Agreement—Effective Supervision of Women Defendants and Offenders in the Community

AGENCY: National Institute of Corrections, Department of Justice.

ACTION: Solicitation for a cooperative agreement.

SUMMARY: The Department of Justice (DOJ), National Institute of Corrections NIC), announces the availability of funds in FY 2003 for a cooperative agreement to develop a 16-hour curriculum on *Effective Supervision of Women Defendants and Offenders in the Community*. NIC will work with a single cooperative agreement awardee to develop a curriculum for pre-service and in-service training of community

correction's managers and line staff on the effective supervision of women defendants and offenders in the community. The new curriculum will focus on the practical knowledge and skills that line probation, parole, and pretrial service officers need to enhance outcomes and improve rates of successful completion for women defendants and offenders in the community. It will employ adult learning techniques and develop modules which can be used in flexible training formats for a maximum of 16 hours. This agreement is for the design and development of a training curriculum. The piloting or direct delivery of the curriculum is not included within this scope of work. No funds will be transferred to State or local governments.

Background: While the majority of probation and parole populations remain predominantly male, there has been an increase in the percentage of women under community supervision while the percentage of males under community supervision has declined. In 2001 women comprised 22% of probation and 12% of parole caseloads. When compared to the 1991 data, this represents an increase of 22% for women on probation and an increase of 50% on parole compared to a 5% decline in probation for men and a 4% decline in the number of men released on parole. (BJA, 8/02).

Recent research literature on women offenders has identified to policy makers the differential risk and need presented by this population. Yet community supervision and treatment practices generally do not incorporate this information. The perception that women offenders are difficult to work with is due, in part, to the many competing issues, criminogenic and non-criminogenic, they bring when entering or re-entering the system. Existing correctional practices often miss the underlying causes of women's criminal behavior. System challenges such as cross-gender supervision, inappropriate staff/offender relationships, and staff uncertainty as to the existence and application of appropriate interventions for the female offender contribute to this misconception. The result is that established case planning, supervision, and treatment practices often have less than the desired impact and, in some cases, can exacerbate the problems women bring to the criminal justice system.

Over the years NIC has developed training materials and offered technical assistance on a wide-range of topics that impact women in the criminal justice system. These topics include policy development, staff sexual misconduct, prison health care for women, and operational issues in women's prisons. Like their male counterparts, the majority of incarcerated women will complete their sentence and return to their communities. The training materials and technical assistance that NIC has offered have provided helpful resources in working with women offenders.

Purpose: The National Institute of Corrections is seeking an applicant, organization, or team which offers curriculum design expertise and a broad knowledge of women offenders and the field of corrections. Specific expertise should include effective supervision practices and expertise in producing a competency-based curriculum. Producing the curriculum includes the writing, editing, formation, assembling, packaging, and expertise in adult learning theory and training.

The purpose of this cooperative agreement is:

1. To fully develop and refine one (1) 16-hour training curriculum package on *Effective Supervision of Women Defendants and Offenders in the Community.* The curriculum will have the following elements:

a. *Instructor's Guide with Lesson Plans.* This must include performance objectives that specify the knowledge, or skills/competencies that will be obtained by the participants. They must be detailed to the degree that other trainers with some experience in the topic can use them to deliver training.

b. *Participant Manual and Materials* that correlate with each module, topic by topic, as appropriate to deliver the training. These materials may include overviews, published articles (if copyrighted must obtain copyright release), check lists, key points outliners, examples of instruments, reports and other materials used by the participants to perform their work. Evaluation questions and strategies (if appropriate) that will be used pre or post delivery for the curriculum as well as resource materials such as video and audio tapes, books, journals and other information to support the objectives of the curriculum are to be included.

Work To Be Performed by the Awardee: The following represents the kinds of work activity required by the project and the expectations of the relationship between NIC and the awardee.

- Consult with the NIC Program Manager on an agreed time line to assure progress and understanding the scope of the work.
- Thoroughly review existing training materials developed by NIC, Office of justice Programs (OJP), or other agencies for relevant portions that could be re-written for application to this project. Key products include but are not limited to:
- *Gender-Responsive Strategies: Research, Practice, and Guiding Principles for Women Offenders* (Bloom, Owen, Covington, 11/02)
- *Critical Issues in Managing Women Offenders* (NIC, 02–I502)
- *Responding to Women Offenders in the Community: Topics in Community Corrections* (NIC, Topics in Community Corrections, 2000)
- *Sentencing Women Offenders: A training Curriculum for Judges* (NIC, Cicero and DeCostanzo, 2001)

Each of those items can be downloaded via the website at *www.nicic.org/services/coop/03-women.htm.*

- The successful applicant would conduct necessary planning with content experts who have experience with supervision of women offenders, understand the importance of criminogenic and non-criminogenic factors in the lives of women, familiarity with cognitive behavioral and social learning approaches in effective interventions with offenders to generate the framework, concepts, modules, content, strategies and performance objectives. (All of the above is subject to final approval by the Program Manager).
- Assign and coordinate writing, developing and revisions of the modules and content areas for the curriculum including multi-media materials.
- Develop, edit, revise, format and package the curriculum, lesson plans, and other course materials.
- Submit preliminary draft for review by the Program Manager per the specified time line. Make revisions and submit second draft if requested.
- A camera-ready copy of the final document must be submitted along with the electronic files, including all graphic images used in the document, on a 3.5″ floppy, zip disk, or CD–ROM. The final document may be submitted in Word Perfect 7.0 (or higher) or Microsoft Word 97 (or higher). Graphic images should be print quality, 600 dpi or higher.

Application Requirements: Applicants must prepare a proposal that describes their plan to provide the project outcomes. The plan must include goals and objectives, methodology, deliverables, management plan, and an overall project budget for the full 12 months. Applicants must identify their key project staff and the relevant expertise of each, and address the manner in which they would

perform all tasks in collaboration with the NIC Project Manager. Proposals are limited to twenty-five double-spaced pages in length, not including resume, other addenda, and SF–424 forms.

Authority: Public Law 93–415.

Funds Available: Project funds are limited to a maximum total of $70,000 for both direct and indirect costs for 12 months. NIC is committed to funding the full 12 month project and project activity must be completed within 12 months of the date of the award. Funds may only be used for activities that are linked to the desired outcomes of the project.

All products from this funding effort will be in the public domain and available to interested agencies through the National Institute of Corrections.

Antideficiency Act: Nothing contained herein shall be construed to obligate the parties to any expenditure or obligation of funds in excess or in advance of appropriation in accordance with the Antideficiency Act, 31 U.S.C. 1341.

Deadline for Receipt of Applications: Applications must be received by 4 p.m. on December 17, 2002. They should be addressed to: National Institute of Corrections, 320 First St., NW., Washington, DC 20534. Attention: Administrative Officer. Applicants are encouraged to use Federal Express, UPS or similar service to ensure delivery is not delayed. Hand delivered applications can be brought to 500 First Street, NW., Washington, DC 20534. The Front desk will call (202) 307–3106 ext. 0 for pickup. Faxed or e-mailed applications will not be accepted.

Addresses and Further Information: Application forms may be obtained through the NIC website: *http://www.nicic.org.* Under ''Additional Opportunities'' click on the appropriate cooperative agreement title. Requests for the application kit, which consists of a copy of this announcement and copies of the required forms, can also be directed to Rita Rippetoe, Cooperative Agreement Control Office, National Institute of Corrections by calling (800) 995–6429 extension 112. She can also be contacted by E-mail via *rrippetoe@bop.gov*.

Technical and/or programmatic questions concerning this announcement are encouraged and should be directed to Maureen Buell at the above address or by calling (800) 995–6423 extension 40121, or (202) 514–0121, or by E-mail via *mbuell@bop.gov.*

Eligible Applicants: An eligible applicant is any state or general unit of local government, public, or private agency, educational institution, organization, team, or individual with the requisite skills to successfully meet the outcome objectives of the project.

Review Considerations: Applications received under this announcement will be subjected to an NIC three to five member Peer Review Process.

Executive Order 12372: This project is not subject to the provisions of E.O. 12372.

Number of Awards: One (1).

NIC Application Number: 03C02. This number should appear as a reference line in the cover letter, in box 11 of Standard Form 424, and on the outside of the delivery envelope.

The Catalog of Federal Domestic Assistance Number is: 16.601. Title—Corrections: Staff Training and Development.

Dated: October 31, 2002.

Morris L. Thigpen,

Director, National Institute of Corrections.

[FR Doc. 02–28209 Filed 11–5–02; 8:45 am]

BILLING CODE 4410–36–M

DEPARTMENT OF LABOR

Employment and Training Administration

Investigations Regarding Certifications of Eligibility To Apply for NAFTA Transitional Adjustment Assistance

Petitions for transitional adjustment assistance under the North American Free Trade Agreement-Transitional Adjustment Assistance Implementation Act (Pub. L. 103–182), hereinafter called (NAFTA–TAA), have been filed with State Governors under Section 250 (b)(1) of Subchapter D, Chapter 2, Title II, of the Trade Act of 1974, as amended, are identified in the Appendix to this Notice. Upon notice from a Governor that a NAFTA–TAA petition has been received, the Director of the Division of Trade Adjustment Assistance (DTAA), Employment and Training Administration (ETA), Department of Labor (DOL), announces the filing of the petition and takes action pursuant to paragraphs (c) and (e) of Section 250 of the Trade Act.

The purpose of the Governor's actions and the Labor Department's investigations are to determine whether the workers separated from employment on or after December 8, 1993 (date of enactment of Pub. L. 103–182) are eligible to apply for NAFTA–TAA under Subchapter D of the Trade Act because of increased imports from or the shift in production to Mexico or Canada.

The petitioners or any other persons showing a substantial interest in the subject matter of the investigations may request a public hearing with the Director of DTAA at the U.S. Department of Labor (DOL) in Washington, DC provided such request if filed in writing with the Director of DTAA not later than November 18, 2002.

Also, interested persons are invited to submit written comments regarding the subject matter of the petitions to the Director of DTAA at the address shown below not later than November 18, 2002.

Petitions filed with the Governors are available for inspection at the Office of the Director, DTAA, ETA, DOL, Room C–5311, 200 Constitution Avenue, NW., Washington, DC 20210.

Signed at Washington, DC this 15th day of October, 2002.

Edward A. Tomchick,

Director, Division of Trade Adjustment Assistance.

APPENDIX

Subject firm	Location	Date received at Governor's Office	Petition No.	Articles produced
58874X (CBO)	Dillingham, AK	09/05/2002	NAFTA–6,600	Fresh salmon.
56890B (CBO)	Dillingham, AK	09/05/2002	NAFTA–6,601	Fresh salmon.
61819K (CBO)	Dillingham, AK	09/05/2002	NAFTA–6,602	Fresh salmon.
66951P (CBO)	Dillingham, AK	09/05/2002	NAFTA–6,603	Fresh salmon.
57451Q (CBO)	Dillingham, AK	09/05/2002	NAFTA–6,604	Fresh salmon.
66925Q (CBO)	Dillingham, AK	09/05/2002	NAFTA–6,605	Fresh salmon.
68192C (CBO)	Dillingham, AK	09/05/2002	NAFTA–6,606	Fresh salmon.
60844R (CBO)	Dillingham, AK	09/05/2002	NAFTA–6,607	Fresh salmon.
57260F (CBO)	Dillingham, AK	09/05/2002	NAFTA–6,608	Fresh salmon.

APPENDIX—Continued

Subject firm	Location	Date received at Governor's Office	Petition No.	Articles produced
56780U (CBO)	Dillingham, AK	09/05/2002	NAFTA–6,609	Fresh salmon.
57286F (CBO)	Dillingham, AK	09/05/2002	NAFTA–6,610	Fresh salmon.
575460 (CBO)	Dillingham, AK	09/05/2002	NAFTA–6,611	Fresh salmon.
56865U (CBO)	Dillingham, AK	09/05/2002	NAFTA–6,612	Fresh salmon.
65631U (CBO)	Dillingham, AK	09/05/2002	NAFTA–6,613	Fresh salmon.
61392C (CBO)	Dillingham, AK	09/05/2002	NAFTA–6,614	Fresh salmon.
61393U (CBO)	Dillingham, AK	09/05/2002	NAFTA–6,615	Fresh salmon.
65917F (CBO)	Dillingham, AK	09/05/2002	NAFTA–6,616	Fresh salmon.
58144S (CBO)	Dillingham, AK	09/05/2002	NAFTA–6,617	Fresh salmon.
57752K (CBO)	Dillingham, AK	09/05/2002	NAFTA–6,618	Fresh salmon.
59338H (CBO)	Dillingham, AK	09/05/2002	NAFTA–6,619	Fresh salmon.
62266S (CBO)	Dillingham, AK	09/05/2002	NAFTA–6,620	Fresh salmon.
58572M (CBO)	Dillingham, AK	09/05/2002	NAFTA–6,621	Fresh salmon.
57496U (CBO)	Dillingham, AK	09/05/2002	NAFTA–6,622	Fresh salmon.
61948U (CBO)	Dillingham, AK	09/05/2002	NAFTA–6,623	Fresh salmon.
61408K (CBO)	Dillingham, AK	09/05/2002	NAFTA–6,624	Fresh salmon.
57496U (CBO)	Dillingham, AK	09/05/2002	NAFTA–6,625	Fresh salmon.
58548X (CBO)	Dillingham, AK	09/05/2002	NAFTA–6,626	Fresh salmon.
65136N (CBO)	Dillingham, AK	09/05/2002	NAFTA–6,627	Fresh salmon.
56231F (CBO)	Dillingham, AK	09/05/2002	NAFTA–6,628	Fresh salmon.
58075V (CBO)	Dillingham, AK	09/05/2002	NAFTA–6,629	Fresh salmon.
59311O (CBO)	Dillingham, AK	09/05/2002	NAFTA–6,630	Fresh salmon.
59555R (CBO)	Dillingham, AK	09/05/2002	NAFTA–6, 631	Fresh salmon.
61155V (CBO)	Dillingham, AK	09/05/2002	NAFTA–6, 632	Fresh salmon.
66431B (CBO)	Dillingham, AK	09/05/2002	NAFTA–6, 633	Fresh salmon.
59335F (CBO)	Dillingham, AK	09/05/2002	NAFTA–6, 634	Fresh salmon.
55222A (CBO)	Dillingham, AK	09/05/2002	NAFTA–6, 635	Fresh salmon.
58354J (CBO)	Dillingham, AK	09/05/2002	NAFTA–6, 636	Fresh salmon.
56925M (CBO)	Dillingham, AK	09/05/2002	NAFTA–6, 637	Fresh salmon.
67350U (CBO)	Dillingham, AK	09/05/2002	NAFTA–6, 638	Fresh salmon.
61292S (CBO)	Dillingham, AK	09/05/2002	NAFTA–6, 639	Fresh salmon.
58284V (CBO)	Dillingham, AK	09/05/2002	NAFTA–6, 640	Fresh salmon.
61907L (CBO)	Dillingham, AK	09/05/2002	NAFTA–6, 641	Fresh salmon.
59541A (CBO)	Dillingham, AK	09/05/2002	NAFTA–6, 642	Fresh salmon.
55694F (CBO)	Dillingham, AK	09/05/2002	NAFTA–6, 643	Fresh salmon.
64514S (CBO)	Dillingham, AK	09/05/2002	NAFTA–6, 644	Fresh salmon.
57398V (CBO)	Dillingham, AK	09/05/2002	NAFTA–6, 645	Fresh salmon.
64700S (CBO)	Dillingham, AK	09/05/2002	NAFTA–6, 646	Fresh salmon.
64636I (CBO)	Dillingham, AK	09/05/2002	NAFTA–6, 647	Fresh salmon.
54135R (CBO)	Dillingham, AK	09/05/2002	NAFTA–6, 648	Fresh salmon.
61300M (CBO)	Dillingham, AK	09/05/2002	NAFTA–6, 649	Fresh salmon.
59536O (CBO)	Dillingham, AK	09/05/2002	NAFTA–6, 650	Fresh salmon.
55589K (CBO)	Dillingham, AK	09/05/2002	NAFTA–6, 651	Fresh salmon.
67874E (CBO)	Dillingham, AK	09/05/2002	NAFTA–6, 652	Fresh salmon.
64659G (CBO)	Dillingham, AK	09/05/2002	NAFTA–6, 653	Fresh salmon.
59494I (CBO)	Dillingham, AK	09/05/2002	NAFTA–6, 654	Fresh salmon.
57363P (CBO)	Dillingham, AK	09/05/2002	NAFTA–6, 655	Fresh salmon.
58988Z (CBO)	Dillingham, AK	09/05/2002	NAFTA–6, 656	Fresh salmon.
59135M (CBO)	Dillingham, AK	09/05/2002	NAFTA–6, 657	Fresh salmon.
61985J (CBO)	Dillingham, AK	09/05/2002	NAFTA–6, 658	Fresh salmon.
61361Q (CBO)	Dillingham, AK	09/05/2002	NAFTA–6, 659	Fresh salmon.
61639N (CBO)	Dillingham, AK	09/05/2002	NAFTA–6, 660	Fresh salmon.
61386Z (CBO)	Dillingham, AK	09/05/2002	NAFTA–6, 661	Fresh salmon.
55223R (CBO)	Dillingham, AK	09/05/2002	NAFTA–6,662	Fresh salmon.
55366U (CBO)	Dillingham, AK	09/05/2002	NAFTA–6,663	Fresh salmon.
60068N (CBO)	Dillingham, AK	09/05/2002	NAFTA–6,664	Fresh salmon.
60688L (CBO)	Dillingham, AK	09/05/2002	NAFTA–6,665	Fresh salmon.
67569Q (CBO)	Dillingham, AK	09/05/2002	NAFTA–6,666	Fresh salmon.
60406B (CBO)	Dillingham, AK	09/05/2002	NAFTA–6,667	Fresh salmon.
58672V (CBO)	Dillingham, AK	09/05/2002	NAFTA–6,668	Fresh salmon.
61482N (CBO)	Dillingham, AK	09/05/2002	NAFTA–6,669	Fresh salmon.
56847J (CBO)	Dillingham, AK	09/05/2002	NAFTA–6,670	Fresh salmon.
59293X (CBO)	Dillingham, AK	09/05/2002	NAFTA–6,671	Fresh salmon.
61339M (CBO)	Dillingham, AK	09/05/2002	NAFTA–6,672	Fresh salmon.
55600F (CBO)	Dillingham, AK	09/05/2002	NAFTA–6,673	Fresh salmon.
64887H (CBO)	Dillingham, AK	09/05/2002	NAFTA–6,674	Fresh salmon.
64122W (CBO)	Dillingham, AK	09/05/2002	NAFTA–6,675	Fresh salmon.
61314F (CBO)	Dillingham, AK	09/05/2002	NAFTA–6,676	Fresh salmon.
67325N (CBO)	Dillingham, AK	09/05/2002	NAFTA–6,677	Fresh salmon.
64936J (CBO)	Dillingham, AK	09/05/2002	NAFTA–6,678	Fresh salmon.

APPENDIX—Continued

Subject firm	Location	Date received at Governor's Office	Petition No.	Articles produced
613Q3O (CBO)	Dillingham, AK	09/05/2002	NAFTA–6,679	Fresh salmon.
60630I (CBO)	Dillingham, AK	09/05/2002	NAFTA–6,680	Fresh salmon.
62112B (CBO)	Dillingham, AK	09/05/2002	NAFTA–6,681	Fresh salmon.
66298R (CBO)	Dillingham, AK	09/05/2002	NAFTA–6,682	Fresh salmon.
62722B (CBO)	Dillingham, AK	09/05/2002	NAFTA–6,683	Fresh salmon.
57398V (CBO)	Dillingham, AK	09/05/2002	NAFTA–6,684	Fresh salmon.
57328L (CBO)	Dillingham, AK	09/05/2002	NAFTA–6,685	Fresh salmon.
57593B (CBO)	Dillingham, AK	09/05/2002	NAFTA–6,686	Fresh salmon.
50216C (CBO)	Dillingham, AK	09/05/2002	NAFTA–6,687	Fresh salmon.
57785G (CBO)	Dillingham, AK	09/05/2002	NAFTA–6,688	Fresh salmon.
61293L (CBO)	Dillingham, AK	09/05/2002	NAFTA–6,689	Fresh salmon.
57544E (CBO)	Dillingham, AK	09/05/2002	NAFTA–6,690	Fresh salmon.
64198L (CBO)	Dillingham, AK	09/05/2002	NAFTA–6,691	Fresh salmon.
61965N (CBO)	Dillingham, AK	09/05/2002	NAFTA–6,692	Fresh salmon.
61298X (CBO)	Dillingham, AK	09/05/2002	NAFTA–6,693	Fresh salmon.
619940 (CBO)	Dillingham, AK	09/05/2002	NAFTA–6,694	Fresh salmon.
58530L (CBO)	Dillingham, AK	09/05/2002	NAFTA–6,695	Fresh salmon.
59635G (CBO)	Dillingham, AK	09/05/2002	NAFTA–6,696	Fresh salmon.
55500V (CBO)	Dillingham, AK	09/05/2002	NAFTA–6,697	Fresh salmon.
59071A (CBO)	Dillingham, AK	09/05/2002	NAFTA–6,698	Fresh salmon.
64185L (CBO)	Dillingham, AK	09/05/2002	NAFTA–6,699	Fresh salmon.
64185L (CBO)	Dillingham, AK	09/05/2002	NAFTA–6,700	Fresh salmon.
65612Q (CBO)	Dillingham, AK	09/05/2002	NAFTA–6,701	Fresh salmon.
61305Z (CBO)	Dillingham, AK	09/05/2002	NAFTA–6,702	Fresh salmon.
64808Q (CBO)	Dillingham, AK	09/05/2002	NAFTA–6,703	Fresh salmon.
58327R (CBO)	Dillingham, AK	09/05/2002	NAFTA–6,704	Fresh salmon.
61396W (CBO)	Dillingham, AK	09/05/2002	NAFTA–6,705	Fresh salmon.
55716P (CBO)	Dillingham, AK	09/05/2002	NAFTA–6,706	Fresh salmon.
60008B (CBO)	Dillingham, AK	09/05/2002	NAFTA–6,707	Fresh salmon.
571900 (CBO)	Dillingham, AK	09/05/2002	NAFTA–6,708	Fresh salmon.
61671P (CBO)	Dillingham, AK	09/05/2002	NAFTA–6,709	Fresh salmon.
57738S (CBO)	Dillingham, AK	09/05/2002	NAFTA–6,710	Fresh salmon.
66298R (CBO)	Dillingham, AK	09/05/2002	NAFTA–6,711	Fresh salmon.
59609H (CBO)	Dillingham, AK	09/05/2002	NAFTA–6,712	Fresh salmon.
61361Q (CBO)	Dillingham, AK	09/05/2002	NAFTA–6,713	Fresh salmon.
61264K (CBO)	Dillingham, AK	09/05/2002	NAFTA–6,714	Fresh salmon.
56498G (CBO)	Dillingham, AK	09/05/2002	NAFTA–6,715	Fresh salmon.
57746H (CBO)	Dillingham, AK	09/05/2002	NAFTA–6,716	Fresh salmon.
66951P (CBO)	Dillingham, AK	09/05/2002	NAFTA–6,717	Fresh salmon.
56838E (CBO)	Dillingham, AK	09/05/2002	NAFTA–6,718	Fresh salmon.
56728W (CBO)	Dillingham, AK	09/05/2002	NAFTA–6,719	Fresh salmon.
57857G (CBO)	Dillingham, AK	09/05/2002	NAFTA–6,720	Fresh salmon.
64428C (CBO)	Dillingham, AK	09/05/2002	NAFTA–6,721	Fresh salmon.
64887H (CBO)	Dillingham, AK	09/05/2002	NAFTA–6,722	Fresh salmon.
61445Z (CBO)	Dillingham, AK	09/05/2002	NAFTA–6,723	Fresh salmon.
55585P (CBO)	Dillingham, AK	09/05/2002	NAFTA–6,724	Fresh salmon.
60635U (CBO)	Dillingham, AK	09/05/2002	NAFTA–6,725	Fresh salmon.
59682R (CBO)	Dillingham, AK	09/05/2002	NAFTA–6,726	Fresh salmon.
61444H (CBO)	Dillingham, AK	09/05/2002	NAFTA–6,727	Fresh salmon.
57995V (CBO)	Dillingham, AK	09/05/2002	NAFTA–6,728	Fresh salmon.
67321O (CBO)	Dillingham, AK	09/05/2002	NAFTA–6,729	Fresh salmon.
61321A (CBO)	Dillingham, AK	09/05/2002	NAFTA–6,730	Fresh salmon.
56145N (CBO)	Egegik, AK	09/05/2002	NAFTA–6,731	Fresh salmon.
59340P (CBO)	Egegik, AK	09/05/2002	NAFTA–6,732	Fresh salmon.
59807O (CBO)	Egegik, AK	09/05/2002	NAFTA–6,733	Fresh salmon.
57818W (CBO)	Egegik, AK	09/05/2002	NAFTA–6,734	Fresh salmon.
55224K (CBO)	Egegik, AK	09/05/2002	NAFTA–6,735	Fresh salmon.
61137K (CBO)	Egegik, AK	09/05/2002	NAFTA–6,736	Fresh salmon.
55887B (CBO)	Egegik, AK	09/05/2002	NAFTA–6,737	Fresh salmon.
61627G (CBO)	Egegik, AK	09/05/2002	NAFTA–6,738	Fresh salmon.
58725J (CBO)	Egegik, AK	09/05/2002	NAFTA–6,739	Fresh salmon.
63411J (CBO)	Egegik, AK	09/05/2002	NAFTA–6,740	Fresh salmon.
64068J (CBO)	Egegik, AK	09/05/2002	NAFTA–6,741	Fresh salmon.
62229F (CBO)	Egegik, AK	09/05/2002	NAFTA–6,742	Fresh salmon.
57937S (CBO)	Egegik, AK	09/05/2002	NAFTA–6,743	Fresh salmon.
55130F (CBO)	Egegik, AK	09/05/2002	NAFTA–6,744	Fresh salmon.
56189Z (CBO)	Egegik, AK	09/05/2002	NAFTA–6,745	Fresh salmon.
60501X (CBO)	Egegik, AK	09/05/2002	NAFTA–6,746	Fresh salmon.
57962A (CBO)	Egegik, AK	09/05/2002	NAFTA–6,747	Fresh salmon.
58417E (CBO)	Egegik, AK	09/05/2002	NAFTA–6,748	Fresh salmon.

APPENDIX—Continued

Subject firm	Location	Date received at Governor's Office	Petition No.	Articles produced
60501X (CBO)	Egegik, AK	09/05/2002	NAFTA–6,749	Fresh salmon.
56712U (CBO)	Egegik, AK	09/05/2002	NAFTA–6,750	Fresh salmon.
58346V (CBO)	Egegik, AK	09/05/2002	NAFTA–6,751	Fresh salmon.
59874W (CBO)	Egegik, AK	09/05/2002	NAFTA–6,752	Fresh salmon.
60824W (CBO)	Egegik, AK	09/05/2002	NAFTA–6,753	Fresh salmon.
64068J (CBO)	Egegik, AK	09/05/2002	NAFTA–6,754	Fresh salmon.
61137K (CBO)	Egegik, AK	09/05/2002	NAFTA–6,755	Fresh salmon.
67876N (CBO)	Egegik, AK	09/05/2002	NAFTA–6,756	Fresh salmon.
55836U (CBO)	Egegik, AK	09/05/2002	NAFTA–6,757	Fresh salmon.
56087G (CBO)	Egegik, AK	09/05/2002	NAFTA–6,758	Fresh salmon.
57464Q (CBO)	Egegik, AK	09/05/2002	NAFTA–6,759	Fresh salmon.
58675X (CBO)	Goodnews Bay, AK	09/05/2002	NAFTA–6,760	Fresh salmon.
67323E (CBO)	Goodnews Bay, AK	09/05/2002	NAFTA–6,761	Fresh salmon.
58886G (CBO)	Igiugig, AK	09/05/2002	NAFTA–6,762	Fresh salmon.
55961K (CBO)	Igiugig, AK	09/05/2002	NAFTA–6,763	Fresh salmon.
57815F (CBO)	Igiugig, AK	09/05/2002	NAFTA–6,764	Fresh salmon.
64881C (CBO)	Igiugig, AK	09/05/2002	NAFTA–6,765	Fresh salmon.
67340W (CBO)	Igiugig, AK	09/05/2002	NAFTA–6,766	Fresh salmon.
65113P (CBO)	Iliamna, AK	09/05/2002	NAFTA–6,767	Fresh salmon.
57814M (CBO)	Iliamna, AK	09/05/2002	NAFTA–6,768	Fresh salmon.
59760V (CBO)	Iliamna, AK	09/05/2002	NAFTA–6,769	Fresh salmon.
659101 (CBO)	Iliamna, AK	09/05/2002	NAFTA–6,770	Fresh salmon.
68181M (CBO)	Iliamna, AK	09/05/2002	NAFTA–6,770	Fresh salmon.
61725F (CBO)	Iliamna, AK	09/05/2002	NAFTA–6,772	Fresh salmon.
61725F (CBO)	Iliamna, AK	09/05/2002	NAFTA–6,773	Fresh salmon.
61512M (CBO)	Iliamna, AK	09/05/2002	NAFTA–6,774	Fresh salmon.
58360M (CBO)	Iliamna, AK	09/05/2002	NAFTA–6,775	Fresh salmon.
58538A (CBO)	Iliamna, AK	09/05/2002	NAFTA–6,776	Fresh salmon.
61946K (CBO)	Iliamna, AK	09/05/2002	NAFTA–6,777	Fresh salmon.
56840M (CBO)	King Salmon, AK	09/05/2002	NAFTA–6,778	Fresh salmon.
56614V (CBO)	King Salmon, AK	09/05/2002	NAFTA–6,779	Fresh salmon.
65026H (CBO)	King Salmon, AK	09/05/2002	NAFTA–6,780	Fresh salmon.
57478J (CBO)	King Salmon, AK	09/05/2002	NAFTA–6,781	Fresh salmon.
59451O (CBO),	King Salmon, AK	09/05/2002	NAFTA–6,782	Fresh salmon.
58843M (CBO)	King Salmon, AK	09/05/2002	NAFTA–6,783	Fresh salmon.
67594X (CBO)	King Salmon, AK	09/05/2002	NAFTA–6,784	Fresh salmon.
60136S (CBO)	King Salmon, AK	09/05/2002	NAFTA–6,785	Fresh salmon.
58196R (CBO)	King Salmon, AK	09/05/2002	NAFTA–6,787	Fresh salmon.
58319H (CBO)	King Salmon, AK	09/05/2002	NAFTA–6,788	Fresh salmon.
58662H (CBO)	King Salmon, AK	09/05/2002	NAFTA–6,789	Fresh salmon.
55574A (CBO)	King Salmon, AK	09/05/2002	NAFTA–6,790	Fresh salmon.
58446F (CBO)	King Salmon, AK	09/05/2002	NAFTA–6,791	Fresh salmon.
66997L (CBO)	King Salmon, AK	09/05/2002	NAFTA–6,792	Fresh salmon.
60215O (CBO)	King Salmon, AK	09/05/2002	NAFTA–6,793	Fresh salmon.
67507U (CBO)	King Salmon, AK	09/05/2002	NAFTA–6,794	Fresh salmon.
50167A (CBO)	King Salmon, AK	09/05/2002	NAFTA–6,795	Fresh salmon.
50073U (CBO)	King Salmon, AK	09/05/2002	NAFTA–6,796	Fresh salmon.
50075F (CBO)	King Salmon, AK	09/05/2002	NAFTA–6,797	Fresh salmon.
50075F (CBO)	King Salmon, AK	09/05/2002	NAFTA–6,798	Fresh salmon.
55933B (CBO)	Kokhanok, AK	09/05/2002	NAFTA–6,799	Fresh salmon.
59286C (CBO)	Kokhanok, AK	09/05/2002	NAFTA–6,800	Fresh salmon.
56376Q (CBO)	Kokhanok, AK	09/05/2002	NAFTA–6,801	Fresh salmon.
68179E (CBO)	Kokhanok, AK	09/05/2002	NAFTA–6,802	Fresh salmon.
64822I (CBO)	Koliganek, AK	09/05/2002	NAFTA–6,803	Fresh salmon.
58060L (CBO)	Koliganek, AK	09/05/2002	NAFTA–6,804	Fresh salmon.
57953U (CBO)	Koliganek, AK	09/05/2002	NAFTA–6,805	Fresh salmon.
57144U (CBO)	Koliganek, AK	09/05/2002	NAFTA–6,806	Fresh salmon.
55325L (CBO)	Koliganek, AK	09/05/2002	NAFTA–6,807	Fresh salmon.
56834J (CBO)	Koliganek, AK	09/05/2002	NAFTA–6,808	Fresh salmon.
56224J (CBO)	Koliganek, AK	09/05/2002	NAFTA–6,809	Fresh salmon.
56224J (CBO)	Koliganek, AK	09/05/2002	NAFTA–6,810	Fresh salmon.
65899N (CBO)	Koliganek, AK	09/05/2002	NAFTA–6,811	Fresh salmon.
55601W (CBO)	Koliganek, AK	09/05/2002	NAFTA–6,812	Fresh salmon.
57226R (CBO)	Koliganek, AK	09/05/2002	NAFTA–6,813	Fresh salmon.
61971Q (CBO)	Koliganek, AK	09/05/2002	NAFTA–6,814	Fresh salmon.
65918W (CBO)	Koliganek, AK	09/05/2002	NAFTA–6,815	Fresh salmon.
565513G (CBO)	Koliganek, AK	09/05/2002	NAFTA–6,816	Fresh salmon.
57257E (CBO)	Koliganek, AK	09/05/2002	NAFTA–6,817	Fresh salmon.
67350U (CBO)	Koliganek, AK	09/05/2002	NAFTA–6,818	Fresh salmon.

APPENDIX—Continued

Subject firm	Location	Date received at Governor's Office	Petition No.	Articles produced
64949J (CBO)	Levelock, AK	09/05/2002	NAFTA–6,819	Fresh salmon.
58218G (CBO)	Levelock, AK	09/05/2002	NAFTA–6,820	Fresh salmon.
56084E (CBO)	Levelock, AK	09/05/2002	NAFTA–6,821	Fresh salmon.
56866M (CBO)	Levelock, AK	09/05/2002	NAFTA–6,822	Fresh salmon.
57694C (CBO)	Levelock, AK	09/05/2002	NAFTA–6,823	Fresh salmon.
56509B (CBO)	Levelock, AK	09/05/2002	NAFTA–6,824	Fresh salmon.
56230M (CBO)	Levelock, AK	09/05/2002	NAFTA–6,825	Fresh salmon.
60843A (CBO)	Levelock, AK	09/05/2002	NAFTA–6,826	Fresh salmon.
59850H (CBO)	Manokotak, AK	09/05/2002	NAFTA–6,827	Fresh salmon.
59510O (CBO)	Manokotak, AK	09/05/2002	NAFTA–6,828	Fresh salmon.
58785F (CBO)	Manokotak, AK	09/05/2002	NAFTA–6,829	Fresh salmon.
66860I (CBO)	Manokotak, AK	09/05/2002	NAFTA–6,830	Fresh salmon.
57523Q (CBO)	Manokotak, AK	09/05/2002	NAFTA–6,831	Fresh salmon.
58553J (CBO)	Manokotak, AK	09/05/2002	NAFTA–6,832	Fresh salmon.
55656X (CBO)	Manokotak, AK	09/05/2002	NAFTA–6,833	Fresh salmon.
55857I (CBO)	Manokotak, AK	09/05/2002	NAFTA–6,834	Fresh salmon.
63407P (CBO)	Manokotak, AK	09/05/2002	NAFTA–6,835	Fresh salmon.
60296O (CBO)	Manokotak, AK	09/05/2002	NAFTA–6,836	Fresh salmon.
58412Q (CBO)	Manokotak, AK	09/05/2002	NAFTA–6,837	Fresh salmon.
589050 (CBO)	Manokotak, AK	09/05/2002	NAFTA–6,838	Fresh salmon.
56513U (CBO)	Manokotak, AK	09/05/2002	NAFTA–6,839	Fresh salmon.
55486A (CBO)	Manokotak, AK	09/05/2002	NAFTA–6,840	Fresh salmon.
58475G (CBO)	Manokotak, AK	09/05/2002	NAFTA–6,841	Fresh salmon.
60325V (CBO)	Manokotak, AK	09/05/2002	NAFTA–6,842	Fresh salmon.
61475R (CBO)	Manokotak, AK	09/05/2002	NAFTA–6,843	Fresh salmon.
59565P (CBO)	Manokotak, AK	09/05/2002	NAFTA–6,844	Fresh salmon.
59688W (CBO)	Manokotak, AK	09/05/2002	NAFTA–6,845	Fresh salmon.
56810I (CBO)	Manokotak, AK	09/05/2002	NAFTA–6,846	Fresh salmon.
58402S (CBO)	Manokotak, AK	09/05/2002	NAFTA–6,847	Fresh salmon.
63407P (CBO)	Manokotak, AK	09/05/2002	NAFTA–6,848	Fresh salmon.
63405G (CBO)	Manokotak, AK	09/05/2002	NAFTA–6,849	Fresh salmon.
58046U (CBO)	Manokotak, AK	09/05/2002	NAFTA–6,850	Fresh salmon.
55104G (CBO)	Manokotak, AK	09/05/2002	NAFTA–6,851	Fresh salmon.
59829U (CBO)	Manokotak, AK	09/05/2002	NAFTA–6,852	Fresh salmon.
59829U (CBO)	Manokotak, AK	09/05/2002	NAFTA–6,853	Fresh salmon.
55470W (CBO)	Manokotak, AK	09/05/2002	NAFTA–6,854	Fresh salmon.
61913O (CBO)	Manokotak, AK	09/05/2002	NAFTA–6,855	Fresh salmon.
634081 (CBO)	Manokotak, AK	09/05/2002	NAFTA–6,856	Fresh salmon.
59986N (CBO)	Manokotak, AK	09/05/2002	NAFTA–6,857	Fresh salmon.
55654N (CBO)	Manokotak, AK	09/05/2002	NAFTA–6,858	Fresh salmon.
57411A (CBO)	Manokotak, AK	09/05/2002	NAFTA–6,859	Fresh salmon.
63413S (CBO)	Naknek, AK	09/05/2002	NAFTA–6,860	Fresh salmon.
57729N (CBO)	Naknek, AK	09/05/2002	NAFTA–6,861	Fresh salmon.
57554C (CBO)	King Salmon, AK	09/05/2002	NAFTA–6,862	Fresh salmon.
61224S (CBO)	King Salmon, AK	09/05/2002	NAFTA–6,863	Fresh salmon.
55888S (CBO)	King Salmon, AK	09/05/2002	NAFTA–6,864	Fresh salmon.
55066S (CBO)	Naknek, AK	09/05/2002	NAFTA–6,865	Fresh salmon.
63111I (CBO)	Naknek, AK	09/05/2002	NAFTA–6,866	Fresh salmon.
67004Z (CBO)	Naknek, AK	09/05/2002	NAFTA–6,867	Fresh salmon.
65037W (CBO)	Naknek, AK	09/05/2002	NAFTA–6,868	Fresh salmon.
61970Z (CBO)	Naknek, AK	09/05/2002	NAFTA–6,869	Fresh salmon.
61342N (CBO)	Naknek, AK	09/05/2002	NAFTA–6,870	Fresh Salmon.
64862Z (CBO)	Naknek, AK	09/05/2002	NAFTA–6,871	Fresh Salmon.
62002U (CBO)	Naknek, AK	09/05/2002	NAFTA–6,872	Fresh Salmon.
65045K (CBO)	Naknek, AK	09/05/2002	NAFTA–6,873	Fresh Salmon.
57536Q (CBO)	Naknek, AK	09/05/2002	NAFTA–6,874	Fresh Salmon.
57767U (CBO)	Naknek, AK	09/05/2002	NAFTA–6,875	Fresh Salmon.
57050O (CBO)	Naknek, AK	09/05/2002	NAFTA–6,876	Fresh Salmon.
85600J (CBO)	Naknek, AK	09/05/2002	NAFTA–6,877	Fresh Salmon.
60600O (CBO)	Naknek, AK	09/05/2002	NAFTA–6,878	Fresh Salmon.
59419M (CBO)	Naknek, AK	09/05/2002	NAFTA–6,879	Fresh Salmon.
59239P (CBO)	Naknek, AK	09/05/2002	NAFTA–6,880	Fresh Salmon.
59452H (CBO)	Naknek, AK	09/05/2002	NAFTA–6,881	Fresh Salmon.
57197L (CBO)	Naknek, AK	09/05/2002	NAFTA–6,882	Fresh Salmon.
58312I (CBO)	Naknek, AK	09/05/2002	NAFTA–6,883	Fresh Salmon.
64725B (CBO)	Naknek, AK	09/05/2002	NAFTA–6,884	Fresh Salmon.
62009Q (CBO)	Naknek, AK	09/05/2002	NAFTA–6,885	Fresh Salmon.
68340V (CBO)	Naknek, AK	09/05/2002	NAFTA–6,886	Fresh Salmon.
65007E (CBO)	Naknek, AK	09/05/2002	NAFTA–6,887	Fresh Salmon.
61249B (CBO)	Naknek, AK	09/05/2002	NAFTA–6,888	Fresh Salmon.

APPENDIX—Continued

Subject firm	Location	Date received at Governor's Office	Petition No.	Articles produced
60111L (CBO)	Naknek, AK	09/05/2002	NAFTA–6,889	Fresh Salmon.
56589N (CBO)	Naknek, AK	09/05/2002	NAFTA–6,890	Fresh Salmon.
58282J (CBO)	Naknek, AK	09/05/2002	NAFTA–6,891	Fresh Salmon.
58212Z (CBO)	Naknek, AK	09/05/2002	NAFTA–6,892	Fresh Salmon.
55324S (CBO)	Naknek, AK	09/05/2002	NAFTA–6,893	Fresh Salmon.
57729N (CBO)	Naknek, AK	09/05/2002	NAFTA–6,894	Fresh Salmon.
56999Q (CBO)	Naknek, AK	09/05/2002	NAFTA–6,895	Fresh Salmon.
56058F (CBO)	Naknek, AK	09/05/2002	NAFTA–6,896	Fresh Salmon.
56939F (CBO)	Naknek, AK	09/05/2002	NAFTA–6,897	Fresh Salmon.
55443G (CBO)	Naknek, AK	09/05/2002	NAFTA–6,898	Fresh Salmon.
63850R (CBO)	Naknek, AK	09/05/2002	NAFTA–6,899	Fresh Salmon.
61341V (CBO)	Naknek, AK	09/05/2002	NAFTA–6,900	Fresh Salmon.
57588P (CBO)	Naknek, AK	09/05/2002	NAFTA–6,901	Fresh Salmon.
61438E (CBO)	Naknek, AK	09/05/2002	NAFTA–6,902	Fresh Salmon.
61951V (CBO)	Naknek, AK	09/05/2002	NAFTA–6,903	Fresh Salmon.
58226Q (CBO)	Naknek, AK	09/05/2002	NAFTA–6,904	Fresh salmon.
61176J (CBO)	Naknek, AK	09/05/2002	NAFTA–6,905	Fresh salmon.
60541O (CBO)	Naknek, AK	09/05/2002	NAFTA–6,906	Fresh salmon.
60305A (CBO)	Naknek, AK	09/05/2002	NAFTA–6,907	Fresh salmon.
57954M (CBO)	New Stuyahok, AK	09/05/2002	NAFTA–6,908	Fresh salmon.
55926G (CBO)	New Stuyahok, AK	09/05/2002	NAFTA–6,909	Fresh salmon.
59312H (CBO)	New Stuyahok, AK	09/05/2002	NAFTA–6,910	Fresh salmon.
65630C (CBO)	New Stuyahok, AK	09/05/2002	NAFTA–6,911	Fresh salmon.
57954M (CBO)	New Stuyahok, AK	09/05/2002	NAFTA–6,912	Fresh salmon.
56717H (CBO)	New Stuyahok, AK	09/05/2002	NAFTA–6,913	Fresh salmon.
56941N (CBO)	New Stuyahok, AK	09/05/2002	NAFTA–6,914	Fresh salmon.
67327X (CBO)	New Stuyahok, AK	09/05/2002	NAFTA–6,915	Fresh salmon.
56222Z (CBO)	New Stuyahok, AK	09/05/2002	NAFTA–6,916	Fresh salmon.
63691J (CBO)	New Stuyahok, AK	09/05/2002	NAFTA–6,917	Fresh salmon.
56223Q (CBO)	New Stuyahok, AK	09/05/2002	NAFTA–6,918	Fresh salmon.
61912O (CBO)	New Stuyahok, AK	09/05/2002	NAFTA–6,919	Fresh salmon.
59026X (CBO)	New Stuyahok, AK	09/05/2002	NAFTA–6,920	Fresh salmon.
51469K (CBO)	New Stuyahok, AK	09/05/2002	NAFTA–6,921	Fresh salmon.
66411G (CBO)	New Stuyahok, AK	09/05/2002	NAFTA–6,922	Fresh salmon.
64808Q (CBO)	New Stuyahok, AK	09/05/2002	NAFTA–6,923	Fresh salmon.
56219X (CBO)	New Stuyahok, AK	09/05/2002	NAFTA–6,924	Fresh salmon.
63414L (CBO)	New Stuyahok, AK	09/05/2002	NAFTA–6,925	Fresh salmon.
60396X (CBO)	New Stuyahok, AK	09/05/2002	NAFTA–6,926	Fresh salmon.
61228N (CBO)	New Stuyahok, AK	09/05/2002	NAFTA–6,927	Fresh salmon.
64737J (CBO)	New Stuyahok, AK	09/05/2002	NAFTA–6,928	Fresh salmon.
66590F (CBO)	New Stuyahok, AK	09/05/2002	NAFTA–6,929	Fresh salmon.
56944P (CBO)	New Stuyahok, AK	09/05/2002	NAFTA–6,930	Fresh salmon.
57641L (CBO)	New Stuyahok, AK	09/05/2002	NAFTA–6,931	Fresh salmon.
603334B (CBO)	New Stuyahok, AK	09/05/2002	NAFTA–6,932	Fresh salmon.
58614S (CBO)	New Stuyahok, AK	09/05/2002	NAFTA–6,933	Fresh salmon.
56495E (CBO)	New Stuyahok, AK	09/05/2002	NAFTA–6,934	Fresh salmon.
56495E (CBO)	New Stuyahok, AK	09/05/2002	NAFTA–6,935	Fresh salmon.
95585U (CBO)	New Stuyahok, AK	09/05/2002	NAFTA–6,936	Fresh salmon.
56498G (CBO)	New Stuyahok, AK	09/05/2002	NAFTA–6,937	Fresh salmon.
64715E (CBO)	New Stuyahok, AK	09/05/2002	NAFTA–6,938	Fresh salmon.
63406X (CBO)	New Stuyahok, AK	09/05/2002	NAFTA–6,939	Fresh salmon.
56217N (CBO)	New Stuyahok, AK	09/05/2002	NAFTA–6,940	Fresh salmon.
50106V (CBO)	New Stuyahok, AK	09/05/2002	NAFTA–6,941	Fresh salmon.
56768N (CBO)	New Stuyahok, AK	09/05/2002	NAFTA–6,942	Fresh salmon.
66293G (CBO)	Newhalen AK	09/05/2002	NAFTA–6,943	Fresh salmon.
58538A (CBO)	Newhalen AK	09/05/2002	NAFTA–6,944	Fresh salmon.
65113P (CBO)	Newhalen AK	09/05/2002	NAFTA–6,945	Fresh salmon.
58052X (CBO)	Newhalen AK	09/05/2002	NAFTA–6,946	Fresh salmon.
59469B (CBO)	Newhalen AK	09/05/2002	NAFTA–6,947	Fresh salmon.
68340V (CBO)	Nondalton, AK	09/05/2002	NAFTA–6,948	Fresh salmon.
64438A (CBO)	Nondalton, AK	09/05/2002	NAFTA–6,949	Fresh salmon.
61359I (CBO)	Nondalton, AK	09/05/2002	NAFTA–6,950	Fresh salmon.
58396K (CBO)	Perryville, AK	09/05/2002	NAFTA–6,951	Fresh salmon.
56095S (CBO)	Pilot Point, AK	09/05/2002	NAFTA–6,952	Fresh salmon.
62030E (CBO)	Pilot Point, AK	09/05/2002	NAFTA–6,953	Fresh salmon.
68031O (CBO)	Pilot Point, AK	09/05/2002	NAFTA–6,954	Fresh salmon.
56815G (CBO)	Pilot Point, AK	09/05/2002	NAFTA–6,955	Fresh salmon.
57349Z (CBO)	Pilot Point, AK	09/05/2002	NAFTA–6,956	Fresh salmon.
59776X (CBO)	Pilot Point, AK	09/05/2002	NAFTA–6,957	Fresh salmon.
56815G (CBO)	Pilot Point, AK	09/05/2002	NAFTA–6,958	Fresh salmon.

APPENDIX—Continued

Subject firm	Location	Date received at Governor's Office	Petition No.	Articles produced
58084B (CBO)	Pilot Point, AK	09/05/2002	NAFTA–6,959	Fresh salmon.
65902U (CBO)	Pilot Point, AK	09/05/2002	NAFTA–6,960	Fresh salmon.
66897C (CBO)	Platinum, AK	09/05/2002	NAFTA–6,961	Fresh salmon.
61905B (CBO)	Port Alsworth, AK	09/05/2002	NAFTA–6,962	Fresh salmon.
58454R (CBO)	Port Heiden, AK	09/05/2002	NAFTA–6,963	Fresh salmon.
57861Z (CBO)	Port Heiden, AK	09/05/2002	NAFTA–6,964	Fresh salmon.
57378A (CBO)	Port Heiden, AK	09/05/2002	NAFTA–6,965	Fresh salmon.
58824J (CBO)	Port Heiden, AK	09/05/2002	NAFTA–6,966	Fresh salmon.
68057O (CBO)	Port Heiden, AK	09/05/2002	NAFTA–6,967	Fresh salmon.
61958R (CBO)	Port Heiden, AK	09/05/2002	NAFTA–6,968	Fresh salmon.
58130B (CBO)	Port Heiden, AK	09/05/2002	NAFTA–6,969	Fresh salmon.
64809J (CBO)	Port Heiden, AK	09/05/2002	NAFTA–6,970	Fresh salmon.
58536P (CBO)	Port Heiden, AK	09/05/2002	NAFTA–6,971	Fresh salmon.
64718G (CBO)	Port Heiden, AK	09/05/2002	NAFTA–6,972	Fresh salmon.
57591Q (CBO)	Port Heiden, AK	09/05/2002	NAFTA–6,973	Fresh salmon.
57218F (CBO)	Port Heiden, AK	09/05/2002	NAFTA–6,974	Fresh salmon.
58130B (CBO)	Port Heiden, AK	09/05/2002	NAFTA–6,975	Fresh salmon.
58396K (CBO)	Port Heiden, AK	09/05/2002	NAFTA–6,976	Fresh salmon.
55791L (CBO)	Port Heiden, AK	09/05/2002	NAFTA–6,977	Fresh salmon.
66896K (CBO)	Portafe Creek, AK	09/05/2002	NAFTA–6,978	Fresh salmon.
56215E (CBO)	Quinhagak, AK	09/05/2002	NAFTA–6,979	Fresh salmon.
66948O (CBO)	Quinhagak, AK	09/05/2002	NAFTA–6,980	Fresh salmon.
56029E (CBO)	Quinhagak, AK	09/05/2002	NAFTA–6,981	Fresh salmon.
58467R (CBO)	Quinhagak, AK	09/05/2002	NAFTA–6,982	Fresh salmon.
64247N (CBO)	South Naknek, AK	09/05/2002	NAFTA–6,983	Fresh salmon.
56961J (CBO)	South Naknek, AK	09/05/2002	NAFTA–6,984	Fresh salmon.
65086S (CBO)	South Naknek, AK	09/05/2002	NAFTA–6,985	Fresh salmon.
55096M (CBO)	South Naknek, AK	09/05/2002	NAFTA–6,986	Fresh salmon.
56260G (CBO)	South Naknek, AK	09/05/2002	NAFTA–6,987	Fresh salmon.
60847U (CBO)	South Naknek, AK	09/05/2002	NAFTA–6,988	Fresh salmon.
55824M (CBO)	South Naknek, AK	09/05/2002	NAFTA–6,989	Fresh salmon.
60074Q (CBO)	South Naknek, AK	09/05/2002	NAFTA–6,990	Fresh salmon.
68123K (CBO)	South Naknek, AK	09/05/2002	NAFTA–6,991	Fresh salmon.
58847H (CBO)	South Naknek, AK	09/05/2002	NAFTA–6,992	Fresh salmon.
61322R (CBO)	South Naknek, AK	09/05/2002	NAFTA–6,993	Fresh salmon.
55948L (CBO)	South Naknek, AK	09/05/2002	NAFTA–6,994	Fresh salmon.
61962L (CBO)	South Naknek, AK	09/05/2002	NAFTA–6,995	Fresh salmon.
57350P (CBO)	South Naknek, AK	09/05/2002	NAFTA–6,996	Fresh salmon.
59196Q (CBO)	Togiak, AK	09/05/2002	NAFTA–6,997	Fresh salmon.
66428A (CBO)	Togiak, AK	09/05/2002	NAFTA–6,998	Fresh salmon.
66813A (CBO)	Togiak, AK	09/05/2002	NAFTA–6,999	Fresh salmon.
56291Q (CBO)	Togiak, AK	09/05/2002	NAFTA–7,000	Fresh salmon.
58424Z (CBO)	Togiak, AK	09/05/2002	NAFTA–7,001	Fresh salmon.
58424Z (CBO)	Togiak, AK	09/05/2002	NAFTA–7,002	Fresh salmon.
68317Z (CBO)	Togiak, AK	09/05/2002	NAFTA–7,003	Fresh salmon.
60070W (CBO)	Togiak, AK	09/05/2002	NAFTA–7,004	Fresh salmon.
66964P (CBO)	Togiak, AK	09/05/2002	NAFTA–7,005	Fresh salmon.
66925Q (CBO)	Togiak, AK	09/05/2002	NAFTA–7,006	Fresh salmon.
68074I (CBO)	Togiak, AK	09/05/2002	NAFTA–7,007	Fresh salmon.
58063P (CBO)	Togiak, AK	09/05/2002	NAFTA–7,008	Fresh salmon.
58110G (CBO)	Togiak, AK	09/05/2002	NAFTA–7,009	Fresh salmon.
50187V (CBO)	Togiak, AK	09/05/2002	NAFTA–7,010	Fresh salmon.
50141A (CBO)	Togiak, AK	09/05/2002	NAFTA–7,011	Fresh salmon.
57596L (CBO)	Togiak, AK	09/05/2002	NAFTA–7,012	Fresh salmon.
56942G (CBO)	Togiak, AK	09/05/2002	NAFTA–7,013	Fresh salmon.
57308P (CBO)	Togiak, AK	09/05/2002	NAFTA–7,014	Fresh salmon.
57330U (CBO)	Togiak, AK	09/05/2002	NAFTA–7,015	Fresh salmon.
57321O (CBO)	Togiak, AK	09/05/2002	NAFTA–7,016	Fresh salmon.
65827S (CBO)	Togiak, AK	09/05/2002	NAFTA–7,017	Fresh salmon.
66968K (CBO)	Togiak, AK	09/05/2002	NAFTA–7,018	Fresh salmon.
67326G (CBO)	Togiak, AK	09/05/2002	NAFTA–7,019	Fresh salmon.
50159M (CBO)	Togiak, AK	09/05/2002	NAFTA–7,020	Fresh salmon.
58106M (CBO)	Togiak, AK	09/05/2002	NAFTA–7,021	Fresh salmon.
57307X (CBO)	Togiak, AK	09/05/2002	NAFTA–7,022	Fresh salmon.
58071B (CBO)	Togiak, AK	09/05/2002	NAFTA–7,023	Fresh salmon.
58201J (CBO)	Togiak, AK	09/05/2002	NAFTA–7,024	Fresh salmon.
60966H (CBO)	Togiak, AK	09/05/2002	NAFTA–7,025	Fresh salmon.
67570I (CBO)	Togiak, AK	09/05/2002	NAFTA–7,026	Fresh salmon.
51521N (CBO)	Togiak, AK	09/05/2002	NAFTA–7,027	Fresh salmon.
57322H (CBO)	Togiak, AK	09/05/2002	NAFTA–7,028	Fresh salmon.

APPENDIX—Continued

Subject firm	Location	Date received at Governor's Office	Petition No.	Articles produced
57310Z (CBO)	Togiak, AK	09/05/2002	NAFTA–7,029	Fresh salmon.
66895R (CBO)	Togiak, AK	09/05/2002	NAFTA–7,030	Fresh salmon.
60141A (CBO)	Togiak, AK	09/05/2002	NAFTA–7,031	Fresh salmon.
57616F (CBO)	Togiak, AK	09/05/2002	NAFTA–7,032	Fresh salmon.
57318N (CBO)	Togiak, AK	09/05/2002	NAFTA–7,033	Fresh salmon.
57959Z (CBO)	Togiak, AK	09/05/2002	NAFTA–7,034	Fresh salmon.
57360N (CBO)	Togiak, AK	09/05/2002	NAFTA–7,035	Fresh salmon.
58106M (CBO)	Togiak, AK	09/05/2002	NAFTA–7,036	Fresh salmon.
58037O (CBO)	Togiak, AK	09/05/2002	NAFTA–7,037	Fresh salmon.
59610X (CBO)	Togiak, AK	09/05/2002	NAFTA–7,038	Fresh salmon.
68757A (CBO)	Togiak, AK	09/05/2002	NAFTA–7,039	Fresh salmon.
56837L (CBO)	Togiak, AK	09/05/2002	NAFTA–7,040	Fresh salmon.
58078X (CBO)	Togiak, AK	09/05/2002	NAFTA–7,041	Fresh salmon.
61508S (CBO)	Togiak, AK	09/05/2002	NAFTA–7,042	Fresh salmon.
58626B (CBO)	Togiak, AK	09/05/2002	NAFTA–7,043	Fresh salmon.
55779F (CBO)	Togiak, AK	09/05/2002	NAFTA–7,044	Fresh salmon.
64764A (CBO)	Togiak, AK	09/05/2002	NAFTA–7,045	Fresh salmon.
57876J (CBO)	Togiak, AK	09/05/2002	NAFTA–7,046	Fresh salmon.
59292G (CBO)	Togiak, AK	09/05/2002	NAFTA–7,047	Fresh salmon.
57311Q (CBO)	Togiak, AK	09/05/2002	NAFTA–7,048	Fresh salmon.
57680K (CBO)	Togiak, AK	09/05/2002	NAFTA–7,049	Fresh salmon.
59350N (CBO)	Togiak, AK	09/05/2002	NAFTA–7,050	Fresh salmon.
57660O (CBO)	Togiak, AK	09/05/2002	NAFTA–7,051	Fresh salmon.
60668H (CBO)	Togiak, AK	09/05/2002	NAFTA–7,052	Fresh salmon.
57413K (CBO)	Togiak, AK	09/05/2002	NAFTA–7,053	Fresh salmon.
58640R (CBO)	Togiak, AK	09/05/2002	NAFTA–7,054	Fresh salmon.
58640R (CBO)	Togiak, AK	09/05/2002	NAFTA–7,055	Fresh salmon.
57383J (CBO)	Togiak, AK	09/05/2002	NAFTA–7,056	Fresh salmon.

[FR Doc. 02–28206 Filed 11–5–02; 8:45 am]
BILLING CODE 4510–30–M

LEGAL SERVICES CORPORATION

Sunshine Act Meeting of the Board of Directors

Time and Date: The Board of Directors of the Legal Services Corporation will meet on November 9, 2002. The meeting will begin at 9 a.m. and continue until conclusion of the Board's agenda.

Location: The W Los Angeles Hotel, 930 Hilgard Avenue, Los Angeles, CA.

Status of Meeting: Open, except that a portion of the meeting may be closed pursuant to a vote of the Board of Directors to hold an executive session. At the closed session, the Corporation's General Counsel will report to the Board on litigation to which the Corporation is or may become a party, and the Board may act on the matters reported. The closing is authorized by the relevant provisions of the Government in the Sunshine Act [5 U.S.C. 552b(c) (10)] and the corresponding provisions of the Legal Services Corporation's implementing regulation [45 CFR 1622.5(h)]. A copy of the General Counsel's Certification that the closing is authorized by law will be available upon request.

Matters to be Considered:

Open Session

1. Approval of agenda.
2. Approval of the minutes of the Board's meeting of August 24, 2002.
3. Approval of the minutes of the Executive Session of the Board's meeting of August 24, 2002.
4. Chairman's Report.
5. Members' Report.
6. Acting Inspector General's Report.
7. President's Report.
8. Consider and act on the report of the Board's Committee on Provision for the Delivery of Legal Services.
9. Consider and act on the report of the Board's Operations and Regulations Committee.
10. Consider and act on the report of the Board's Finance Committee.
11. Report by the Mauricio Vivero, LSC Vice President for Governmental Relations & Public Affairs, on Legal Services Branding Project.
12. Consider and act on a proposal to authorize the President of LSC to lease up to an additional 2,000 square feet of office space for LSC's headquarters.

Closed Session

13. Briefing [1] by the Inspector General on the activities of the Office of Inspector General.
14. Consider and act on the Office of Legal Affairs' report on potential and pending litigation involving LSC.

Open Session

15. Consider and act on other business.
16. Public Comment.

Contact Person for Information: Victor M. Fortuno, Vice President for Legal Affairs, General Counsel & Corporate Secretary, at (202) 336–8800.

SPECIAL NEEDS: Upon request, meeting notices will be made available in alternate formats to accommodate visual and hearing impairments. Individuals who have a disability and need an accommodation to attend the meeting may notify Elizabeth S. Cushing, at (202) 336–8800.

[1] Any portion of the closed session consisting solely of staff briefings does not fall within the Sunshine Act's definition of the term ''meeting'' and, therefore, the requirements of the Sunshine Act do not apply to any such portion of the closed session. 5 U.S.C. 552(b)(a)(2) and (b). See also 45 CFR 1622.2 & 1622.3

Dated: November 1, 2002.

Victor M. Fortuno,

Vice President for Legal Affairs, General Counsel & Corporate Secretary.

[FR Doc. 02–28297 Filed 11–4–02; 10:10 am]

BILLING CODE 7050–01–P

LEGAL SERVICES CORPORATION

Sunshine Act Meeting of the Board of Directors

TIME AND DATE: The Board of Directors of the Legal Services Corporation will meet on November 8, 2002. The meeting will begin at 2 p.m. and continue until conclusion of the Board's agenda.

LOCATION: The W Los Angeles Hotel, 930 Hilgard Avenue, Los Angeles, CA.

STATUS OF MEETING: Open, except that a portion of the meeting may be closed pursuant to a vote of the Board of Directors to hold an executive session. At the closed session, the Corporation's General Counsel will report to the Board on litigation to which the Corporation is or may become a party, and the Board may act on the matters reported. The closing is authorized by the relevant provisions of the Government in the Sunshine Act [5 U.S.C. 552b(c)(10)] and the corresponding provisions of the Legal Services Corporation's implementing regulation [45 CFR 1622.5(h)]. A copy of the General Counsel's Certification that the closing is authorized by law will be available upon request.

MATTERS TO BE CONSIDERED:

Open Session

1. Approval of agenda.
2. Staff report on LSC Strategic Directions.
3. Board discussion on LSC Strategic Directions.
4. Consider and act on possible changes to LSC Strategic Directions.
5. Consider and act on other business.
6. Public Comment.

CONTACT PERSON FOR INFORMATION: Victor M. Fortuno, Vice President for Legal Affairs, General Counsel & Corporate Secretary, at (202) 336–8800.

SPECIAL NEEDS: Upon request, meeting notices will be made available in alternate formats to accommodate visual and hearing impairments. Individuals who have a disability and need an accommodation to attend the meeting may notify Elizabeth S. Cushing, at (202) 336–8800.

Dated: November 1, 2002.

Victor M. Fortuno,

Vice President for Legal Affairs, General Counsel & Corporate Secretary.

[FR Doc. 02–28298 Filed 11–4–02; 10:10 am]

BILLING CODE 7050–01–P

LEGAL SERVICES CORPORATION

Sunshine Act Meeting of the Board of Directors Finance Committee

TIME AND DATE: The Finance Committee of the Legal Services Corporation Board of Directors will meet on November 8, 2002. The meeting will begin at 9 a.m. and continue until the Committee concludes its agenda.

LOCATION: The W Los Angeles Hotel, 930 Hilgard Avenue, Los Angeles, CA.

STATUS OF MEETING: Open.

MATTERS TO BE CONSIDERED:

1. Approval of agenda.
2. Approval of the minutes of the Committee's meeting of August 23, 2002.
3. Report on the Corporation's operating expenses for Fiscal Year 2002 through September 30, 2002.
4. Consider and act on other business.
5. Public comment.

FOR MORE INFORMATION CONTACT: Victor M. Fortuno, Vice President for Legal Affairs, General Counsel & Corporate Secretary, at (202) 336–8800.

SPECIAL NEEDS: Upon request, meeting notices will be made available in alternate formats to accommodate visual and hearing impairments. Individuals who have a disability and need an accommodation to attend the meeting may notify Elizabeth S. Cushing, at (202) 336–8800.

Dated: November 1, 2002.

Victor M. Fortuno,

Vice President for Legal Affairs, General Counsel & Corporate Secretary.

[FR Doc. 02–28299 Filed 11–4–02; 10:11 am]

BILLING CODE 7050–01–P

LEGAL SERVICES CORPORATION

Sunshine Act Meeting of the Board of Directors Operations & Regulations Committee

TIME AND DATE: The Operations and Regulations Committee of the Legal Services Corporation Board of Directors will meet on November 8, 2002. The meeting will begin at 10:15 a.m. and continue until the Committee concludes its agenda.

LOCATION: The W Los Angeles Hotel, 930 Hilgard Avenue, Los Angeles, CA.

STATUS OF MEETING: Open.

MATTERS TO BE CONSIDERED:

1. Approval of agenda.
1. Approval of agenda.
2. Approval of the minutes of the Committee's meeting of August 23, 2002.
3. Consider and act on Draft Notice of Proposed Rulemaking on LSC's Financial Eligibility regulation, 45 CFR Part 1611.
4. Consider and act on Draft Notice of Proposed Rulemaking on LSC's Disclosure of Information pursuant to the Freedom of Information Act regulation, 45 CFR part 1602.
5. Consider and act on Staff Report on the Rulemaking Protocol.
6. Consider and act on Limited English Proficiency Guidance for LSC recipients.
7. Staff report on other rulemakings.
8. Consider and act on other business.
9. Public comment.

CONTACT PERSON FOR INFORMATION: Victor M. Fortuno, Vice President for Legal Affairs, General Counsel & Corporate Secretary, at (202) 336–8800.

SPECIAL NEEDS: Upon request, meeting notices will be made available in alternate formats to accommodate visual and hearing impairments. Individuals who have a disability and need an accommodation to attend the meeting may notify Elizabeth S. Cushing, at (202) 336–8800.

Dated: November 1, 2002.

Victor M. Fortuno,

Vice President for Legal Affairs, General Counsel & Corporate Secretary.

[FR Doc. 02–28300 Filed 11–4–02; 10:11 am]

BILLING CODE 7050–01–P

LEGAL SERVICES CORPORATION

Sunshine Act Meeting of the Board of Directors Committee on Provision for the Delivery of Legal Services

TIME AND DATE: The Committee on Provision for the Delivery of Legal Services of the Legal Services Corporation Board of Directors will meet on November 8, 2002. The meeting will begin at 9 a.m. and continue until the Committee concludes its agenda.

LOCATION: The W Los Angeles Hotel, 930 Hilgard Avenue, Los Angeles, CA

STATUS OF MEETING: Open.

MATTERS TO BE CONSIDERED:

1. Approval of agenda.
2. Approval of the minutes of the Committee's meeting of August 23, 2002.
3. Panel presentations by three LSC-funded programs (Legal Aid of Orange County, Neighborhood Legal Services of Los Angeles County, and the Legal Aid

Foundation of Los Angeles) in the Los Angeles Basin Region.

(1) An Overview of the Demographics of Poverty and Diversity in the Los Angeles Basin, including a presentation on the diversity of legal services to non-English speaking clients. Presented by program executive directors, staff, and community partners.

(2) An in-depth presentation of programs' substantive advocacy, with a specific focus on the problems of affordable housing and health care. Presented by programs' advocacy staff.

4. Consider and act on other business.

5. Public comment.

FOR MORE INFORMATION CONTACT: Victor M. Fortuno, Vice President for Legal Affairs, General Counsel & Corporate Secretary of the Corporation, at (202) 336–8800.

SPECIAL NEEDS: Upon request, meeting notices will be made available in alternate formats to accommodate visual and hearing impairments. Individuals who have a disability and need an accommodation to attend the meeting may notify Elizabeth S. Cushing, at (202) 336–8800.

Dated: November 1, 2002.

Victor M. Fortuno,

Vice President for Legal Affairs, General Counsel & Corporate Secretary.

[FR Doc. 02–28301 Filed 11–4–02; 10:12 am]

BILLING CODE 7050–01–P

LEGAL SERVICES CORPORATION

Sunshine Act Meeting of the Board of Directors Ad Hoc Committee on Performance Reviews of the President and Inspector General

TIME AND DATE: The Ad Hoc Committee on Performance Reviews of the President and Inspector General of the Legal Services Corporation's Board of Directors will meet on November 9, 2002. The meeting will begin at 1 p.m. and continue until conclusion of the committee's agenda.

LOCATION: The W Los Angeles Hotel, 930 Hilgard Avenue, Los Angeles, CA

STATUS OF MEETING: Except for approval of the committee's agenda and any miscellaneous business that may come before the committee, the meeting will be closed to the public. The closing is authorized by the relevant provisions of the Government in the Sunshine Act [5 U.S.C. 552b(c)(2) & (6)] and the corresponding provisions of the Legal Services Corporation's implementing regulation [45 CFR 1622.5(a) & (e)]. A copy of the General Counsel's Certification that the closing is authorized by law will be available upon request.

MATTERS TO BE CONSIDERED:

Open Session:

1. Approval of agenda.

Closed Session:

2. Conduct a performance appraisal of the President of the Corporation.

3. Conduct a performance appraisal of the Acting Inspector General of the Corporation.

Open Session:

4. Consider and act on other business.

FOR MORE INFORMATION CONTACT: Victor M. Fortuno, General Counsel and Secretary of the Corporation, at (202) 336–8800.

SPECIAL NEEDS: Upon request, meeting notices will be made available in alternate formats to accommodate visual and hearing impairments. Individuals who have a disability and need an accommodation to attend the meeting may notify Elizabeth Cushing at (202) 336–8800.

Dated: November 1, 2002.

Victor M. Fortuno,

Vice President for Legal Affairs, General Counsel, and Corporate Secretary.

[FR Doc. 02–28302 Filed 11–4–02; 10:12 am]

BILLING CODE 7050–01–P

MERIT SYSTEMS PROTECTION BOARD

[MSPB Docket No. SF–844E–01–0309–B–1]

Opportunity To File Amicus Briefs in *Visitacion Ancheta* v. *Office of Personnel Management*

AGENCY: Merit Systems Protection Board.

ACTION: The Merit Systems Protection Board has issued an opinion and order in the above-captioned case, in which it notes that it is seeking amicus briefs from interested parties. The issues that the Board would like any amicus brief to address are set forth in the Summary below. The Board's decision can also be accessed on the Board's Web site, *www.mspb.gov.*

SUMMARY: The appellant petitioned for review of an initial decision that affirmed a denial by the Office of Personnel Management (OPM) of her application for disability retirement. In April, 1994, the appellant was appointed to a City Carrier position in the U.S. Postal Service. About a year later, in July, 1995, she sustained a work-related injury, subsequently stopped working, and began receiving compensation for wage-loss from the Office of Workers' Compensation Programs (OWCP). In August, 1997, she accepted the Postal Service's ''(r)ehab job offer'' of a Modified Letter Carrier (MLC) position, and returned to work. Effective February 10, 1998, she was removed from her City Carrier position for misconduct.

The appellant then filed an application for disability retirement under the Federal Employees' Retirement System (FERS). OPM denied the application in initial and reconsideration decisions, finding that she failed to establish she was disabled from performing the duties of the MLC position prior to her removal for misconduct. On appeal to the Board, the administrative judge (AJ) held a hearing and then issued the initial decision affirming OPM's final decision on the same grounds set forth by OPM. He found that: (1) The agency had, in effect, been able to accommodate the appellant's medical restrictions in the MLC position; and (2) the appellant did not show that she was unable to work in that position because of a disabling medical condition. The appellant timely filed a petition for review, arguing that the AJ erred by finding her capable of performing the MLC duties. OPM timely filed a response opposing the appellant's petition.

A claim for disability retirement under FERS may be allowed only if an application is filed with OPM before separation from the service or within one year thereafter, unless waiver of this time limit is warranted for mental incompetence. 5 U.S.C. 8453; 5 CFR 844.201(a). Upon filing a timely application, the applicant must establish that: (1) She completed at least eighteen months of creditable civilian service; (2) she was unable, because of disease or injury, to render useful and efficient service in her position; (3) her disabling medical condition is expected to continue for at least one year from the date the application is filed; (4) she was not afforded reasonable accommodation of her disabling condition in her position; and (5) she has not declined a reasonable offer of reassignment to a vacant position in the employing agency for which she is qualified, at the same or greater grade (or pay level), in her commuting area, and in which she is able to render useful and efficient service. 5 U.S.C. 8451(a); 5 CFR 844.103(a).

The record shows, and it is undisputed, that the appellant timely filed her application for disability retirement and that she had completed at least eighteen months of creditable civilian service. Both the AJ and OPM found that the appellant did not show she was disabled from performing the duties of the MLC position. However,

neither considered whether the court's decision in *Bracey* v. *Office of Personnel Management*, 236 F.3d 1356 (Fed. Cir. 2001), applied to this case. The Board thus found that further proceedings to address this are necessary.

In *Bracey*, the Board's reviewing court considered whether an employee's assignment to the light-duty shop, where he retained the grade and pay of his Electronics Worker position of record but performed the lower-graded duties of Material Examiner and Identifier, constituted an accommodation precluding his disability retirement under the Civil Service Retirement System. The court held that an accommodation precludes disability retirement only if it: (1) Adjusts the employee's job or work environment, enabling him to perform the critical or essential duties of his current position of record, or (2) reassigns the employee to an established, vacant position at the same grade and pay. 236 F.3d at 1358–59, 1361.

The court explained that an agency's offer of a light duty position that is not officially classified and graded and consists of unclassified, ad hoc duties devised to fit an employee's particular medical restrictions does not qualify as a ''vacant position,'' as that term is used in 5 U.S.C. 8337(a) and 5 CFR 831.1202, and therefore does not preclude disability retirement. *Id.* at 1359–60. The court in *Bracey* acknowledged that an employing agency may offer suitable work, under the Federal Employees' Compensation Act (FECA), which the employee must accept to continue receiving FECA benefits. 236 F.3d at 1362. The court stated, however, that ''the employee is free to refuse the offer of such work and to take disability retirement instead of the FECA benefits' and that ''there is nothing anomalous about the fact that an employee may be eligible for one set of benefits while being ineligible for the other.'' *Id.* The court thus concluded that Bracey's assignment to the light-duty shop did not constitute an accommodation within his position of record since he did not perform the critical and essential duties of the position but performed lower-graded duties instead. *Id.* at 1360–61. The court further concluded that the assignment did not constitute a reassignment to a vacant position since the light duty position consisted of ''a set of duties selected on an ad hoc basis to fit the needs of a particular disabled employee'' and was not a definite, preexisting position that is classified and graded according to its duties, responsibilities, and qualification requirements. *Id.* at 1359–60. In *Marino* v. *Office of Personnel Management*, 243 F.3d 1375, 1377 (Fed. Cir. 2001), the court held that this holding in Bracey applies equally to disability retirement applications under FERS, such as is involved here.

In finding that a ''vacant position,'' as that term is used in the retirement statute and regulations, must be ''an officially established position that is graded and classified,'' 236 F.3d at 1359, the court relied on 5 U.S.C. 5101(2), which requires that positions in agencies covered by 5 U.S.C. 5102 be ''grouped and identified by classes and grades * * *'' *Id.* at 1359–60. In *Bracey*, the appellant's employing agency, the Department of the Navy, was an executive agency and therefore covered by 5 U.S.C. 5101. *See* 5 U.S.C. 5102. In this case, however, the appellant was employed by the Postal Service, which is not an agency covered by section 5101. *See Robinson* v. *U.S. Postal Service*, 63 M.S.P.R. 307, 320 (1994)(acknowledging that the Postal Service is not covered by section 5101 but concluding, that, for RIF purposes, that agency was required to follow general classification principles, such as assigning grade levels to positions rather than to employees). In her dissenting opinion in *Bracey* v. *Office of Personnel Management*, 83 M.S.P.R. 400, 421 n.5 (1999), then-Vice Chair Slavet questioned whether the factors pertinent to the accommodation issue in that case might be inapplicable to disability retirement appeals involving the Postal Service. She noted that the Postal Service is exempt from ''[m]any aspects of the executive branch personnel system,'' such as Title 5 classification rules, and is governed by a collective bargaining agreement that may bind the agency in accommodating disabled employees. *Id.* She found it unnecessary to resolve this question since *Bracey* did not involve the Postal Service, nor did the court address this issue. However, this issue is squarely presented in this case, which involves a former Postal Service employee who was covered by a collective bargaining agreement. The appellant was covered by the agreement between the Postal Service and the National Association of Letter Carriers, AFL–CIO.

Therefore, because the Board has not heretofore considered whether Bracey applies in the context of the Postal Service, the Board requests amicus briefs from the USPS, its bargaining agents, and all other interested individuals or organizations on this issue.

DATES: All briefs in response to this notice shall be filed with the Board's Western Regional Office on or before December 31, 2002.

ADDRESSES: All briefs should include the case name and docket number noted above (*Visitacion Ancheta* v. *Office of Personnel Management*, Docket No. SF–844E–01–0309–B–1) and be entitled ''Amicus Brief.'' Briefs should be filed with the Western Regional Office, Merit Systems Protection Board, 250 Montgomery Street, Suite 400, San Francisco, CA 94104.

FOR FURTHER INFORMATION CONTACT: Shannon McCarthy, Deputy Clerk of the Board, or Matthew Shannon, Counsel to the Clerk, (202) 653–7200.

Dated: November 1, 2001.

Bentley M. Roberts, Jr.,

Clerk of the Board.

[FR Doc. 02–28254 Filed 11–5–02; 8:45 am]

BILLING CODE 7400–01–P

NATIONAL FOUNDATION ON THE ARTS AND HUMANITIES

Submission for OMB Review; Comment Request

AGENCY: National Endowment for the Humanities, NFAH.

ACTION: Notice.

SUMMARY: The National Endowment for the Humanities (NEH) has submitted the following public information collection request (ICR) to the Office of Management and Budget (OMB) for review and approval as required by the provisions of the Paperwork Reduction Act of 1995 (Pub.L. 104–13,44 U.S.C. Chapter 35). Copies of this ICR, with applicable supporting documentation, may be obtained by calling Ms. Susan G. Daisey, Director, Office of Grant Management, at the National Endowment for the Humanities, (202–606–8494) or may be requested by e-mail to *sdaisey@neh.gov*. Comments should be sent to the Office of Information and Regulatory Affairs, Attn: OMB Desk Officer for the National Endowment for the Humanities, Office of Management and Budget, Room 10235, Washington, DC 20503 (202–395–7316), within 30 days from the date of this publication in the **Federal Register**. If you anticipate that you will be submitting comments, but find it difficult to do so within the period of time allowed by this notice, you should advise the contact listed above as soon as possible.

SUPPLEMENTARY INFORMATION: The Office of Management and Budget (OMB) is particularly interested in comments which:

(1) Evaluate whether the proposed collection of information is necessary for the proper performance of the functions of the agency, including whether the information will have practical utility; (2) Evaluate the accuracy of the agency's estimate of the burden of the proposed collection of information, including the validity of the methodology and assumptions used; (3) Enhance the quality, utility, and clarity of the information to be collected; and (4) Minimize the burden of the collection of information on those who are to respond.

Agency: National Endowment for the Humanities.

Title of Proposal: My History is America's History Web site.

OMB Number: 3136–0136.

Frequency of Collection: Continual.

Affected Public: General Public.

Number of Respondents: Approximately 400,000 per year.

Estimated Time per Respondent: Approximately one quarter hour per response.

Estimated Total Burden Hours: 100,000.

Total Annualized capital/startup costs: 0.

Total annual costs (operating/maintaining systems or purchasing services): 0.

Description: This submission requests approval from OMB within sixty days for a three-year extension of this currently approved collection of information.

FOR FURTHER INFORMATION CONTACT: Ms. Susan G. Daisey, Director, Office of Grant Management, National Endowment for the Humanities, 1100 Pennsylvania Avenue, NW., Room 311, Washington, DC 20506, or by e-mail to: *sdaisey@neh.gov.* Telephone: 202–606–8494.

Lynne Munson,

Deputy Chairman.

[FR Doc. 02–28152 Filed 11–5–02; 8:45 am]

BILLING CODE 7536–01–P

SECURITIES AND EXCHANGE COMMISSION

Proposed Collection; Comment Request

[*Extension:* Rule 12a–5 and Form 26, SEC File No. 270–85, OMB Control No. 3235–0079; Rule 15c1–7, SEC File No. 270–146, OMB Control No. 3235–0134; Rule 15Aj–1, SEC File No. 270–25, OMB Control No. 3235–0044.]

Upon written request, copies available from: Securities and Exchange Commission, Office of Filings and Information Services, Washington, D.C. 20549.

Notice is hereby given that pursuant to the Paperwork Reduction Act of 1995 (44 U.S.C. 3501 *et seq.*), the Securities and Exchange Commission (''Commission'') is soliciting comments on the collections of information summarized below. The Commission plans to submit the existing collection of information to the Office of Management and Budget for extension and approval.

• Rule 12a–5—Temporary Exemption Substituted or Additional Securities

Rule 12a–5 of the Securities Exchange Act of 1934 (the ''Act'') generally makes it unlawful for any security to be traded on a national securities exchange unless such security is registered on the exchange in accordance with the provisions of the Act and the rules and regulations thereunder.

Rule 12a–5 and Form 26 were adopted by the Commission in 1936 and 1955 pursuant to sections 3(a)(12), 10(b), and 23(a) of the Act. Subject to certain conditions, Rule 12a–5 affords a temporary exemption (generally for up to 120 days) from the registration requirements of section 12(a) of the Act for a new security when the holders of a security admitted to trading on a national securities exchange obtain the right (by operation of law or otherwise) to acquire all or any part of a class of another or substitute security of the same or another issuer, or an additional amount of the original security. The purpose of the exemption is to avoid an interruption of exchange trading to afford time for the issuer of the new security to list and register it, or for the exchange to apply for unlisted trading privileges.

Under paragraph (d) of Rule 12a–5, after an exchange has taken action to admit any security to trading pursuant to the provisions of the rule, the exchange is required to file with the Commission a notification on Form 26. Form 26 provides the Commission with certain information regarding a security admitted to trading on an exchange pursuant to Rule 12a–5, including: (1) The name of the exchange, (2) the name of the issuer, (3) a description of the security, (4) the date(s) on which the security was or will be admitted to when-issued and/or regular trading, and (5) a brief description of the transaction pursuant to which the security was or will be issued.

The Commission generally oversees the national securities exchanges. This mission requires that, under section 12(a) of the Act specifically, the Commission receive notification of any securities that are permitted to trade on an exchange pursuant to the temporary exemption under Rule 12a–5. Without Rule 12a–5 and Form 26 the Commission would be unable to fully implement these statutory responsibilities.

There are currently eight national securities exchanges subject to Rule 12a–5. While approximately 40 Form 26 notifications are filed annually, the reporting burdens are not typically spread evenly among the exchanges.[1] For purposes of this analysis of burden, however, the staff has assumed that each exchange files an equal number (five) of Form 26 notifications. Each notification requires approximately 20 minutes to complete. Each respondent's compliance burden, then, in a given year would be approximately 100 minutes (20 minutes/report × 5 reports = 100 minutes), which translates to just over 13 hours in the aggregate for all respondents (8 respondents × 100 minutes/respondent = 800 minutes, or 13⅓ hours).

Based on the most recent available information, the Commission staff estimates that the cost to respondents of completing a notification on Form 26 is, on average, $14.35 per response. The staff estimates that the total annual related reporting cost per respondent is $71.75 (5 responses/respondent × $14.35 cost/response), for a total annual related cost to all respondents of $574 ($71.75 cost/respondent × 8 respondents).

• Rule 15c1–7—Discretionary Accounts

Rule 15c1–7 provides that any act of a broker-dealer designed to effect securities transactions with or for a customer account over which the broker-dealer (directly or through an agent or employee) has discretion will be considered a fraudulent, manipulative, or deceptive practice under the federal securities laws, unless a record is made of the transaction immediately by the broker-dealer. The record must include (a) The name of the customer, (b) the name, amount, and price of the security, and (c) the date and time when such transaction took place.

The information required by the rule is necessary for the execution of the Commission's mandate under the Act to prevent fraudulent, manipulative, and deceptive acts and practices by broker-dealers. This is used by the Commission and the various self-regulatory organizations in compliance examinations to determine whether such trades have occurred.

[1] In fact, some exchanges do not file any notifications on Form 26 with the Commission in a given year.

Respondents to Rule 15c1–7 consist of broker-dealers that effect security transactions with or for a customer account over which the broker-dealer has discretion.

The Commission estimates that 500 respondents collect information annually under Rule 15c1–7 and that approximately 33,333 hours would be required annually for these collections.

• Rule 15Aj–1—Amendments and Supplements to Registration Statements of Securities Associations

Rule 15Aj–1 implements the requirements of sections 15A, 17, and 19 of the Act by requiring every association registered as, or applying for registration as, a national securities association or as an affiliated securities association to keep its registration statement up-to-date by making periodic filings with the Commission on Form X–15AJ–1 and Form X–15AJ–2.

Rule 15Aj–1 requires a securities association to promptly notify the Commission after the discovery of any inaccuracy in its registration statement or in any amendment or supplement thereto by filing an amendment to its registration statement on Form X–15AJ–1 correcting such inaccuracy. The rule also requires an association to promptly notify the Commission of any change which renders no longer accurate any information contained or incorporated in its registration statement or in any amendment or supplement thereto by filing a current supplement on Form X–15AJ–1. Rule 15Aj–1 further requires an association to file each year with the Commission an annual consolidated supplement on Form X–15AJ–2.

The information required by Rule 15Aj–1 and Forms X–15AJ–1 and X–15AJ–2 is intended to enable the Commission to carry out its statutorily mandated oversight functions and to assure that registered securities associations are in compliance with the Act. This information is also made available to members of the public. Without the requirements imposed by the rule, the Commission would be unable to fulfill its regulatory responsibilities.

There is presently only one registered securities association, which registered in 1939, subject to the rule. The burdens associated with Rule 15Aj–1 requirements have been borne by only one securities association since Rule 15Aj–1 was adopted. Furthermore, the burdens associated with Rule 15Aj–1 vary depending on whether amendments and current supplements are filed on Form X–15AJ–1 in addition to an annual consolidated supplement filed on Form X–15AJ–2. The Commission staff estimates the burden in hours necessary to comply with the rule by filing an amendment or a current supplement on Form X–15AJ–1 to be approximately one-half hour, with a related cost of $12, per response. The Commission staff estimates the burden in hours necessary to comply with the rule by filing an annual consolidated supplement on Form X–15AJ–2 to be approximately three hours, with a related cost of $96. Therefore, the Commission staff estimates that the total annual related reporting cost associated with the rule to be upwards of $96, assuming a minimum filing of an annual consolidated statement on Form X–15AJ–2, with additional filings on Form X–15AJ–1 correspondingly increasing such reporting cost.

Written comments are invited on: (a) Whether the proposed collection of information is necessary for the proper performance of the functions of the agency, including whether the information shall have practical utility; (b) the accuracy of the Commission's estimate of the burden of the proposed collection of information; (c) ways to enhance the quality, utility, and clarity of the information to be collected; and (d) ways to minimize the burden of the collection of information on respondents, including through the use of automated collection techniques or other forms of information technology. Consideration will be given to comments and suggestions submitted in writing within 60 days of this publication.

Direct your written comments to Kenneth A. Fogash, Acting Associate Executive Director/CIO, Office of Information Technology, Securities and Exchange Commission, 450 Fifth Street, NW, Washington, DC 20549.

Margaret H. McFarland,

Deputy Secretary.

Dated: October 30, 2002.

[FR Doc. 02–28129 Filed 11–5–02; 8:45 am]

BILLING CODE 8010–01–P

SECURITIES AND EXCHANGE COMMISSION

Request For Public Comment

Upon written request, copies available from: Securities and Exchange Commission, Office of Filings and Information Services, Washington, DC 20549.

[Extension: Rule 2a–7, SEC File No. 270–258, OMB Control No. 3235–0268.]

Notice is hereby given that under the Paperwork Reduction Act of 1995 (44 U.S.C. 3501 *et seq.*), the Securities and Exchange Commission (the ''Commission'') is soliciting public comments on the collections of information summarized below. The Commission plans to submit this existing collection of information to the Office of Management and Budget for extension and approval.

Rule 2a–7 (17 CFR 270.2a–7) under the Investment Company Act of 1940 (15 U.S.C. 80a) (the ''Act'') governs money market funds. Money market funds are open-end management investment companies that differ from other open-end management investment companies in that they seek to maintain a stable price per share, usually $1.00. The rule exempts money market funds from the valuation requirements of the Act, and, subject to certain risk-limiting conditions, permits money market funds to use the ''amortized cost method'' of asset valuation or the ''penny-rounding method'' of share pricing.

Rule 2a–7 imposes certain recordkeeping and reporting obligations on money market funds. The board of directors of a money market fund, in supervising the fund's operations, must establish written procedures designed to stabilize the fund's net asset value (''NAV''). The board also must adopt guidelines and procedures relating to certain responsibilities it delegates to the fund's investment adviser. These procedures typically address various aspects of the fund's operations. The fund must maintain and preserve for six years a written copy of both these procedures and guidelines. The fund also must maintain and preserve for six years a written record of the board's considerations and actions taken in connection with the discharge of its responsibilities, to be included in the board's minutes. In addition, the fund must maintain and preserve for three years written records of certain credit risk analyses, evaluations with respect to securities subject to demand features or guarantees, and determinations with respect to adjustable rate securities and asset backed securities. If the board takes action with respect to defaulted securities, events of insolvency, or deviations in share price, the fund must file with the Commission an exhibit to Form N–SAR describing the nature and circumstances of the action. If any portfolio security fails to meet certain eligibility standards under the rule, the fund also must identify those securities in an exhibit to Form N–SAR. After certain events of default or insolvency relating to a portfolio security, the fund must notify the Commission of the event and the actions the fund intends to take in response to the situation.

The recordkeeping requirements in rule 2a–7 are designed to enable

Commission staff in its examinations of money market funds to determine compliance with the rule, as well as to ensure that money market funds have established procedures for collecting the information necessary to make adequate credit reviews of securities in their portfolios. The reporting requirements of rule 2a–7 are intended to assist Commission staff in overseeing money market funds.

Commission staff estimates that approximately 891 money market funds are subject to the rule each year. The staff estimates that each of these funds spends an average of 539 hours each year to document credit risk analyses, and determinations regarding adjustable rate securities, asset backed securities, and securities subject to a demand feature or guarantee.[1] In addition, each year an estimated average of three money market funds each spends approximately one hour to record (in the board minutes) board determinations and actions in response to certain securities' failure to maintain eligibility standards, or certain events of default or insolvency, and to notify the Commission of the event.[2] Finally, Commission staff estimates that in the first year of operation, the board of directors, counsel, and staff of an average of 15 new money market fund each spends 38.5 hours to formulate and establish written procedures for stabilizing the fund's NAV and guidelines for delegating certain of the board's responsibilities to the fund's adviser. Based on these estimates, Commission staff estimates the total burden of the rule's paperwork requirements for money market funds to be 480,830 hours.[3] This is an increase from the previous estimate of 319,211 hours. The increase is attributable to updated information from money market funds regarding hourly burdens, a more accurate calculation of the component parts of some information collection burdens, and the significant differences in burden hours reported by the funds selected at random to be surveyed in different submission years.

These estimates of burden hours are made solely for the purposes of the Paperwork Reduction Act. The estimates are not derived from a comprehensive or even a representative survey or study of Commission rules.

In addition to the burden hours, Commission staff estimates that money market funds will incur costs to preserve records required under rule 2a–7. These costs will vary significantly for individual funds, depending on the amount of assets under fund management and whether the fund preserves its records in a storage facility in hard copy or has developed and maintains a computer system to create and preserve compliance records.[4] Commission staff estimates that the amount an individual fund may spend ranges from $100 per year to $300,000. Based on an average cost of $0.0000052 per dollar of assets under management for small and medium-sized funds to $0.0000024 per dollar of assets under management for large funds,[5] the staff estimates compliance with rule 2a–7 costs the fund industry approximately $5 million per year.[6] Based on responses from individuals in the money market fund industry, the staff estimates that some of the largest fund complexes have created computer programs for maintaining and preserving compliance records for rule 2a–7. Based on a cost of $0.0000097 per dollar of assets under management for large funds, the staff estimates that the total annualized capital/startup costs range from $0 for small funds to $20 million for all large funds. Commission staff further estimates, however, that even absent the requirements of rule 2a–7, money market funds would spend at least half of the amount for capital costs ($10 million) and for record preservation ($2.5 million) to establish and maintain these records and the systems for preserving them as a part of sound business practices to ensure diversification and minimal credit risk in a portfolio for a fund that seeks to maintain a stable price per share.

The collections of information required by rule 2a–7 are necessary to obtain the benefits described above. Notices to the Commission will not be kept confidential. An agency may not conduct or sponsor, and a person is not required to respond to, a collection of information unless it displays a currently valid control number.

Written comments are requested on: (a) Whether the collections of information are necessary for the proper performance of the functions of the Commission, including whether the information has practical utility; (b) the accuracy of the Commission's estimate of the burdens of the collection of information; (c) ways to enhance the quality, utility and clarity of the information collected; and (d) ways to minimize the burden of the collection of information on respondents, including through the use of automated collection techniques or other forms of information technology. Consideration will be given to comments and suggestions submitted in writing within 60 days of this publication.

Please direct your written comments to Kenneth A. Fogash, Acting Associate Executive Director/CIO, Office of Information Technology, Securities and Exchange Commission, 450 5th Street, NW, Washington, DC 20549.

Dated: October 30, 2002.

Margaret H. McFarland,

Deputy Secretary.

[FR Doc. 02–28188 Filed 11–5–02; 8:45 am]

BILLING CODE 8010–01–P

[1] This average is based on discussions with individuals at money market funds and their advisers. The actual number of burden hours may vary significantly depending on the type and number of portfolio securities held by individual funds.

[2] This number may vary significantly from year to year.

[3] This estimate is based on the following calculation: ((891 x 539) + (3 x 1) + (15 x 38.5) = 480,830.

[4] The amount of assets under management in money market funds ranges from approximately $100,000 to $60.9 billion.

[5] For purpose of this PRA submission, Commission staff used the following categories for fund sizes: (i) small—money market funds with $50 million or less in assets under management, (ii) medium—money market funds with more than $50 million up to and including $1 billion in assets under management; and (iii) large—money market funds with more than $1 billion in assets under management.

[6] The staff estimated the annual cost of preserving the required books and records by identifying the annual costs incurred by several funds and then relating this total cost to the average net assets of these funds during the year. With a total of $191.3 billion under management in small and medium funds, and $2,078 billion under management in large funds, the total amount was estimated as follows: ($0.0000052 x $191.3 billion) + ($0.0000024 x $2,078 billion) = $5 million.

SECURITIES AND EXCHANGE COMMISSION

Agency Meeting

FEDERAL REGISTER CITATION OF PREVIOUS ANNOUNCEMENT:

[67 FR 66433, October 31, 2002].

STATUS: Open Meeting.

PLACE: 450 Fifth Street, NW., Washington, DC.

DATE AND TIME OF PREVIOUSLY ANNOUNCED MEETING: November 6, 2000.

CHANGE IN THE MEETING: Room Change.

The Open Meeting scheduled for Wednesday, November 6, 2002 at 10 a.m. will be held in Room 1C30, the William O. Douglas Room.

At times, changes in Commission priorities require alterations in the scheduling of meeting items. For further information and to ascertain what, if any, matters have been added, deleted or postponed, please contact:

The Office of the Secretary at (202) 942–7070.

Dated: November 1, 2002.

Margaret H. McFarland,

Deputy Secretary.

[FR Doc. 02–28325 Filed 11–4–02; 11:45 am]

BILLING CODE 8010–01–M

SECURITIES AND EXCHANGE COMMISSION

[Release No. 34–46738; File No. SR–Amex–2001–32]

Self-Regulatory Organizations; Notice of Filing and Order Granting Accelerated Approval of Proposed Rule Change and Amendment No. 1 thereto by American Stock Exchange LLC Relating to the Listing of Fixed Income Trust Receipts Under Rule 1000A.

October 29, 2002.

Pursuant to section 19(b)(1) of the Securities Exchange Act of 1934 (''Exchange Act''),[1] and Rule 19b–4 thereunder,[2] notice is hereby given that on May 25, 2001, the American Stock Exchange LLC (the ''Amex'' or the ''Exchange'') filed with the Securities and Exchange Commission (the ''Commission'' or the ''SEC'') the proposed rule change as described in Items I and II, which Items have been prepared by the Exchange. On October 21, 2002, the Amex submitted Amendment No. 1 to the proposed rule change.[3] The Commission is publishing this notice to solicit comments on the proposed rule change, as amended, from interested persons and to grant accelerated approval.

I. Self-Regulatory Organization's Statement of the Terms of Substance of the Proposed Rule Change

Amex proposes to list under Amex Rule 1000A (''Index Fund Shares'') ''Fixed Income Trust Receipts'' (''FITRs'') issued by the Exchange Traded Fund (''ETF'') Advisors Trust (''Trust''), as described below, whose portfolio will consist of investment grade government debt securities.

II. Self-Regulatory Organization's Statement of the Purpose of, and Statutory Basis for, the Proposed Rule Change

In its filing with the Commission, the Amex included statements concerning the purpose of, and basis for, the proposed rule change and discussed any comments it received on the proposed rule change. The text of these statements may be examined at the places specified in Item IV below. The Amex has prepared summaries, set forth in sections A, B, and C below, of the most significant aspects of such statements.

A.Self-Regulatory Organization's Statement of the Purpose of, and the Statutory Basis for, the Proposed Rule Change

Purpose

Amex Rule 1000A provides standards for listing Index Fund Shares, which are securities issued by an open-end management investment company (open-end mutual fund) for Exchange trading. These securities are registered under the Investment Company Act of 1940[4] (''1940 Act'') as well as the Exchange Act.[5] The Exchange currently trades over 80 different index funds under Rule 1000A based on various stock indexes,[6] as well as indexes based on fixed income securities.

The Exchange proposes to list FITRs under Rule 1000A issued by index funds of ETF Advisors Trust (''Trust''), whose portfolio will consist of investment grade government debt securities (*e.g.*, securities issued or guaranteed by the U.S. Treasury, an agency or instrumentality of the U.S. government, or by a government-sponsored entity).[7]

1. Fixed Income Trust Receipts

The Trust is an open-end management investment company offering a number of separate investment portfolios of fixed income securities (each such portfolio an ''Index Fund'' or a ''Fund''). These securities would be listed under Amex Rules 1000A *et. seq.*, including Amex Rule 1000A as it is proposed to be amended herein. Each Index Fund that is the subject of this filing will hold a portfolio of securities selected to reflect the duration, and which seek to closely match, before fees and expenses, the total return of a specified fixed income securities index (individually, an ''Underlying Index'' and collectively, the ''Underlying Indexes'').[8] The Underlying Indexes are the Ryan 10 Year Treasury Index,[9] the Ryan 5 Year Treasury Index,[10] the Ryan 2 Year Treasury Index,[11] and the Ryan 1 Year Treasury Index.[12] All of the Underlying Indexes[13] are based on total returns of various maturities of U.S. Treasury Securities (defined below).

The Underlying Indexes were created by Ronald J. Ryan and Ryan Holdings LLC, and are compiled and maintained by Ryan Labs Inc. (collectively, the ''Index Provider''). Ryan Labs Inc. has calculated and published each Underlying Index or its equivalent predecessor and related data for over 10 years. The construction, calculation model and components of each Underlying Index are based upon measurable objective events, instruments and standards; these have remained consistent since initial publication in all cases except one where the 1-year Index had to be adjusted to reflect the U.S. Treasury's

[1] 15 U.S.C 78s(b)(1).

[2] 17 CFR 240.19b–4.

[3] This notice, representing Amendment No. 1, replaces the original Rule 19b–4 filing in its entirety.

[4] 15 U.S.C. 80a.

[5] 15 U.S.C. 78a.

[6] Standard & Poor's Depositary Receipts®, S&P MidCap SPDRs, DIAMONDS®, and NASDAQ–100 Index Tracking Stock(sm) are unit investment trust securities listed under Amex Rules 1000 *et seq.* applicable to Portfolio Depositary Receipts.

[7] The Commission previously approved amendments to Rule 1000A(b) to specify that Index Fund Shares (1) may be based on a portfolio of fixed income securities; (2) may be issued by an investment company in return for a specified portfolio of fixed income securities and/or cash, and (3) may be redeemed at a holder's request by the investment company, which will pay the redeeming holder fixed income securities and/or cash. See Securities Exchange Act Release No. 46252 (July 24, 2002), 67 FR 49715 (July 31, 2002) (Approving File No. SR–Amex–2001–35).

[8] The Trust, ETF Advisors, LLC. (''Advisor''), and ALPs Distributors, Inc. (''Applicants'') have filed with the Commission an Application for Orders (''Application'') under Section 6(c) of the 1940 Act for the purpose of exempting the Index Funds from various provisions of the 1940 Act and rules thereunder. *See* Investment Company Act Release No. 25725 (September 3, 2002) , 67 FR 57464 (September 10, 2002) (File No. 812–12843). The Commission granted the requested exemptive relief. *See* Investment Company Act Release No. 25759 (September 27, 2002). The information provided in this Rule 19b–4 filing relating to the Index Funds is based on information included in the Application. Additional information regarding the Index Funds is included in the Application.

[9] The Ryan 10 Year Treasury Index is based on the return of the most recently auctioned 10 year Treasury note. Calculated once each day, the Index is available for periods back to November 1, 1977. The 10 Year Treasury note is replaced at each new quarterly auction.

[10] The Ryan 5 Year Treasury Index is based on the return of the most recently auctioned 5 year Treasury note. Calculated once each day, the Index is available for periods back to August 28, 1979. The 5 Year Treasury note is replaced at each new quarterly auction.

[11] The Ryan 2 Year Treasury Index is based on the return of the most recently auctioned 2 year Treasury note. Calculated once each day, the Index is available for periods back to August 24, 1973. The 2 Year Treasury note is replaced at each new monthly auction.

[12] Since May 23, 2001, the Ryan 1 Year Adjusted Treasury Index has been based on (a) the return of the most recently auctioned 6 Month Treasury bill, weighted two-thirds, and (b) the return of the most recently auctioned 2 year Treasury note, weighted one-third. Calculated once each day, the original Index was created on December 31, 1988. The 6 Month Treasury bill is replaced at each weekly auction, and the 2 Year Treasury note is replaced at each new monthly auction.

[13] Except for the Ryan 1 Year Adjusted Treasury Index, the Underlying Indices listed above have been calculated daily since March 21, 1983; Underlying Indices for dates prior to March 21, 1983 have been constructed from historical databases.

cessation of issuance of 1-year Treasury bills.

All of the Underlying Indexes are widely disseminated by various media. In particular, the information pertaining to the Underlying Indices are published on a daily (*e.g.*, Ryan Indexes,[14] Bloomberg, Reuters and Telerate), weekly (*e.g.*, Barrons and the New York Times), bi-weekly (*e.g.*, Grant's Interest Rate Observer), and monthly basis (*e.g.*, Bondweek, IOMA's Report on Managing 401(k) plans, DC Plan Investing, S&P Fund Services and Check-free Database).

The portfolio securities of the Index Funds will primarily consist of investment grade debt securities issued or guaranteed by the U.S. Treasury (''Treasury Securities''), by an agency or instrumentality of the U.S. Government, or by a government-sponsored entity such as the Government National Mortgage Association (''Ginnie Mae''), the Federal Home Loan Mortgage Corporation (''Freddie Mac'') and Fannie Mae, formerly the Federal National Mortgage Corporation (collectively, ''Agency Securities'' and, together with ''Treasury Securities,'' referred to herein as ''Government Securities''). Government Securities may be backed by the full faith and credit of the U.S. Treasury, by the right to borrow from the U.S. Treasury, or by the agency or instrumentality issuing or guaranteeing the security.

Each Index Fund will issue, on a continuous offering basis, one or more groups of a fixed number of Fund Shares (*e.g.*, 50,000 shares) with a market value of approximately $5,000,000 to $10,000,000 for each such group of Index Fund Shares (a ''Creation Unit Aggregation'').

FITRs will not be individually redeemable; only FITRs combined into Creation Unit Aggregations will be redeemable. It is expected that the initial net asset value (''NAV'') of FITRs will be established at approximately $85 per FITR.[15]

ALPs Distributors, Inc. is a broker-dealer registered under the Exchange Act. It will act as the distributor and principal underwriter of Creation Unit Aggregations of FITRs (''Distributor'') on an agency basis. The Distributor is not an affiliated person of the Trust or the Advisor. The Bank of New York (''BNY'') will act as administrator (''Administrator''), fund accountant, custodian (''Custodian''), transfer agent and dividend disbursing agent for each Index Fund, and securities lending agent of the portfolio of securities held by a fund (''Portfolio Securities'').

FITRs will be registered in book-entry form only and the Index Funds will not issue individual share certificates. The Depository Trust Company (''DTC'') or its nominee will be the record or registered owner of all outstanding FITRs. The records of DTC or DTC participants (''DTC Participants'') will reflect the beneficial ownership of FITRs. FITRs will trade on the Exchange during the hours of 9:30 a.m. to 4:15 p.m., (Eastern Time (''ET'')).

2. Investment Objectives and Principal Investment Strategies

Each Underlying Index is based on one or more specified debt security series issued by the U.S. Treasury. Each Underlying Index serves as a portfolio benchmark by specifying a selected debt instrument or instruments that correspond to a specified maturity on the U.S. Treasury yield curve. The Index Funds and Underlying Indexes that are subject of this Rule 19b–4 filing are as follows:

Name of Index Fund	Ryan Index
Treasury 10 FITR ETF.	Ryan 10 Year Treasury Index.
Treasury 5 FITR ETF	Ryan 5 Year Treasury Index.
Treasury 2 FITR ETF	Ryan 2 Year Treasury Index.
Treasury 1 FITR ETF	Ryan 1 Year Adjusted Treasury Index.

The Underlying Indexes, together with the other Treasury indexes maintained by the Index Provider, map the U.S. Treasury yield curve as described above.[16] The design principle behind each such index is that the most reliable measure of interest rates is the U.S. Treasury yield curve. The Ryan 10 Year, 5 Year, and 2 Year Treasury Indices and 1 year Adjusted Treasury Index also rely on the principle that the most liquid measure of every point on the U.S. Treasury yield curve is the ''on-the-run'' (''OTR'') U.S. Treasury instrument in any given maturity range.[17]

The respective investment objective of each Index Fund will be to provide investment results that seek to closely match the total return, before fees and expenses, of the relevant Underlying Index. A fund's total return will be included in the prospectus in a manner consistent with the requirements of Form N–1A under the 1940 Act.[18] Each Index Fund will hold Portfolio Securities that in the aggregate will closely match the cash flows of its Underlying Index, meaning that each Fund will invest in a range of fixed income instruments based upon the Advisor's application of quantitative analytical procedures to provide a duration and cash flow profile similar to that of the Fund's respective Underlying Index. In seeking to achieve the respective investment objective of each Index Fund, the Advisor will invest at least 90% of each Fund's total assets in Treasury Securities and other Government Securities. This is a fundamental investment policy which can only be changed by shareholder vote. As a non-fundamental investment policy that can be changed by the Board of Trustees (''Board'') without shareholder vote, each Fund will invest at least 80% of its total assets in Treasury Securities that are backed by the full-faith and credit of the U.S. Government. An Index Fund may also invest up to 10% of its total assets in repurchase agreements, futures contracts, options and other derivative instruments, only in furtherance of the objective of seeking to closely match the total return, before fees and expenses, of that Fund's Underlying Index. Applicants expect that the returns of each Fund should be highly correlated with the return of its Underlying Index and that the correlation coefficient between each Fund and its Underlying Index will exceed 98% over extended periods and that the annual tracking error will be less than one percentage point of total return relative to its Underlying Index. Annual tracking error will be monitored by the Advisor under the supervision of the Board of Directors of the Fund. Applicants expect that ongoing adjustments will be made in the portfolio of each Index Fund in order to provide investment results in keeping with its investment objective.

The Underlying Indices are based on the OTR Treasury Securities yield curve. An OTR Treasury Security in a given maturity range, such as the six-month bill, two, five and ten-year notes and thirty-year bond, is the most recently auctioned Treasury Security issue with that stated maturity. The OTR Treasury rates for a given maturity have been generally regarded as the

[14] *See http://www.ryanindex.com* and *http://www.ryanlabs.com.*

[15] The Applicants believe that a convenient trading range will be between $50–$200 per FITR and each Index Fund reserves the right to declare a stock split or a reverse stock split if the trading price over time falls outside an appropriate trading range price. The Prospectus for each Index Fund will disclose these items, but such items may not be included the product description of the Funds.

[16] See notes 9–13, supra.

[17] ''On the run'' means the most recent auctioned U.S. Treasury Security in a specified maturity range (*e.g.*, 5 years).

[18] The product descriptions for the Index Funds may not be include information pertaining to a Fund's total return.

''ultimate'' fixed income benchmarks for U.S. dollar-denominated debt because the OTR Treasury instrument yield is the base yield for each maturity against which all other Treasury instruments and most other dollar-denominated fixed income instruments are evaluated. Other dollar-denominated debt instruments are usually traded or referenced at a spread to the appropriate OTR Treasury rate.

To ensure that each Underlying Index correctly reflects the current OTR rate, the Index Provider updates each such index by replacing the component security or securities of such index (the ''Component Security or Securities''), so that the old OTR Treasury Security (now the most recent ''off-the-run'' Treasury Security) is replaced with the new OTR Treasury Security at the time such new Treasury Security is auctioned (this process is referred to as a ''roll'' strategy or ''rolling'' the old OTR position into the new OTR Treasury Security). For example, the Ryan 2 Year Treasury Index is updated by rolling the old OTR position in a two-year note to the new OTR two-year note at the time of each Treasury auction of a two-year note. Returns for each such Underlying Index are calculated to reflect the prices and yields of its component securities, based on the assumption that a ''roll'' strategy is employed.

3. Qualification as a Regulated Investment Company

Each Index Fund intends to qualify for and to elect treatment as a Regulated Investment Company (''RIC'') for U.S. federal income tax purposes, with the result that each Fund effectively will be treated as if it were a separate entity and will generally not be subject to U.S. federal income tax on its income to the extent it distributes substantially all of its investment company taxable income and net capital gains and satisfies other applicable requirements of the Internal Revenue Code.

4. Description of the Underlying Indices and OTR Treasury Securities

Each Underlying Index is based on one or more specified debt security series issued by the U.S. Treasury. Each Underlying Index serves as a portfolio benchmark by specifying a selected debt instrument or instruments that correspond to a specified maturity on the U.S. Treasury yield curve.

Rather than matching an Index Fund's Portfolio Securities exclusively to the Component Security or Securities of its Underlying Index, the Advisor, when seeking to closely match the average dollar-weighted duration of the portfolio of the Index Fund to the duration of its Underlying Index, will also invest in Government Securities such as other Treasury Securities, Agency Securities, or related repurchase agreements, futures contracts, options and other derivative instruments. In addition to Government Securities, the Advisor may use repurchase agreements, futures, options and other derivative or synthetic instruments in constructing the portfolio of an Index Fund. The actual positions held in the portfolio of a Fund may consist of OTR Treasury Securities, ''off-the-run'' Treasury Securities,[19] other Treasury Securities such as STRIPS [20] of any duration, Agency Securities and related repurchase agreements, futures contracts, options and other derivative instruments, subject to limitations discussed in the Application.

The Advisor will be constrained when managing the portfolio of each Index Fund to an average effective duration for the entire Fund's portfolio that will differ by no more than 1 month from the duration of the Ryan 1 Year Adjusted Treasury Index for the 1 year FITRs, by no more than 2 months from the duration of the Ryan 2 Year Treasury Index for the 2 year FITRs, by no more than 6 months from the duration of the Ryan 5 Year Treasury Index for the 5 year FITRs, and by no more than 6 months from the duration of the Ryan 10 Year Treasury Index for the 10 year FITRs. If an Index Fund does not meet those standards at the close of trading on any Business Day, the portfolio of such Fund will be brought into compliance as quickly as practicable.

5. Sales of FITRs

FITRs of an Index Fund will be issued and sold only in Creation Unit Aggregations of a fixed number of shares (*e.g.*, 50,000 shares), as specified in the prospectus for such Fund. Creation Unit Aggregations will be sold through the Distributor on a continuous basis at the NAV per share next determined after an order in proper form is received. The NAV of each Index Fund is expected to be determined as of the close of the regular trading session on the New York Stock Exchange (''NYSE''), (ordinarily 4:00 p.m., (ET))[21] on each Business Day (defined immediately below), and the Trust will sell and redeem Creation Unit Aggregations of each Index Fund only on Business Days.[22]

Creation Unit Aggregations may be purchased only by or through an ''Authorized Participant'' which is any entity that is a DTC Participant, which has entered into a Participant Agreement (defined below) with the Administrator and the Distributor. Such Authorized Participant will agree pursuant to the terms of such agreement (a ''Participant Agreement'') on behalf of itself or any investor on whose behalf it will act, as the case may be, to certain conditions, including that such Authorized Participant will make available for each purchase of Creation Unit Aggregations an amount of cash sufficient to pay the Balancing Amount, once the NAV of a Creation Unit Aggregation is next determined after receipt of the purchase order in proper form, together with a Transaction Fee imposed by each Fund in connection with effecting purchases or redemptions. The Authorized Participant may require an investor to enter into an agreement with such Authorized Participant with respect to certain matters, including payment of the Balancing Amount. An investor does not have to be an Authorized Participant, but must place an order through, and make appropriate arrangements with, an Authorized Participant. An Authorized Participant is not required to be a member of the Exchange.

The Applicant states that in order to keep costs low and permit each Index Fund to be as fully invested as possible, FITRs of each Index Fund generally will be purchased in Creation Unit Aggregations in exchange for the purchaser's ''in-kind'' deposit of a portfolio of particular securities (''Deposit Securities''), together with the deposit of a specified cash payment (''Balancing Amount'')(collectively with the Deposit Securities, a ''Portfolio Deposit''). The Deposit Securities will consist of a portfolio of particular securities designated by the Advisor in the aggregate to closely match the total return of the relevant Underlying Index.[23]

[19] ''Off-the-Run'' means U.S. Treasury securities auctioned before the current on-the-run issue.

[20] Separate Trading of Registered Interest and Principal of Securities (''STRIPS'').

[21] The nominal ''closing time'' for the Government Securities markets is generally 3:00 p.m., ET. Trading; however, although less active, continues in such markets after 3:00 p.m., ET.

[22] A ''Business Day'' is defined as any day that the (i) Government Securities markets in the United States, (ii) the Custodian and (iii) the NYSE, the Amex or relevant other exchange (as described in the Application) are open for business. The term Business Day, therefore does not include certain federal holidays when banks and the Government Securities market are closed but national securities exchanges are open, currently Columbus Day and Veterans Day.

[23] The Custodian of each Index Fund will make available, prior to the Exchange's opening, the Creation List identifying Deposit Securities required for a Creation Unit aggregation. *See* Dissemination of Fund Information, below.

The Balancing Amount is an amount equal to the difference between (1) The NAV (per Creation Unit Aggregation) of the Index Fund and (2) the total aggregate market value (per Creation Unit Aggregation) of the Deposit Securities (such sum referred to herein as the ''Deposit Amount''). The Balancing Amount serves the function of compensating for differences, if any, between the NAV per Creation Unit Aggregation and the Deposit Amount.

6. Redemption of FITRs

It is presently expected that redemptions of Creation Unit Aggregations generally will be made by each Index Fund through delivery of designated Portfolio Securities (''Redemption Securities'') and a specified cash payment (''Cash Redemption Payment'') collectively, a ''Redemption Payment.'' The Custodian, upon receipt of the relevant information from the Advisor, will cause to be published daily the list of Deposit Securities which a creator of Creation Unit Aggregations must deliver to an Index Fund (''Creation List'') and the list of Redemption Securities which a redeemer will receive from the Index Fund (''Redemption List'').

The Applicants note that in some circumstances it may not be practicable or convenient for an Index Fund to operate on an in-kind basis exclusively. Therefore, the Trust may permit, in its discretion, with respect to an Index Fund, under certain circumstances, an ''in-kind'' purchaser to substitute cash in lieu of depositing some or all of the requisite Deposit Securities. The Trust reserves the right to determine in the future that FITRs of an Index Fund may be purchased in Creation Unit Aggregations on a ''cash-only'' basis. The decision to permit cash-only purchases of Creation Unit Aggregations, to the extent made at all in the future, would be made if the Trust and the Advisor believed such method would reduce the Trust's transaction costs or would enhance the Trust's operating efficiency. This would likely happen only in limited circumstances.

The Custodian will make available through the National Securities Clearing Corporation (''NSCC'') on each Business Day, prior to the opening of trading on the Amex (currently 9:30 a.m. ET) the Creation List which will contain the names and the required number and maturity of the Deposit Securities included in the current Portfolio Deposit (based on information at the end of the previous Business Day) for each Index Fund. Such Portfolio Deposit will be applicable, subject to any adjustments to the Balancing Amount as described below, in order to effect purchases of Creation Unit Aggregations of a given Index Fund until such time as the next-announced Portfolio Deposit composition is made available.

Creation Unit Aggregations of each Index Fund will be redeemable at their NAV per FITR next determined after receipt of a request for redemption by the relevant Index Fund. Each Index Fund has, pursuant to its organizational documents, the right to make redemption payments in respect of an Index Fund in cash, in-kind, or in a combination of each, provided the value of its redemption payments on a Creation Unit Aggregation basis equals the NAV per the appropriate number of FITRs of such Index Fund.

Applicants currently contemplate that Creation Unit Aggregations of each Index Fund will be redeemed principally ''in-kind'' by the delivery of Redemption Securities (together with the Cash Redemption Payment). Creation Unit Aggregations of any Index Fund will generally be redeemable on any Business Day in exchange for the Cash Redemption Payment and Redemption Securities in effect on the date a request for redemption is made, along with payment of a Transaction Fee. In addition, just as the Balancing Amount is delivered by the purchaser of Creation Unit Aggregations to the Index Fund, the Index Fund will also deliver to the redeeming beneficial owner (through the Authorized Participant) in cash the Cash Redemption Payment, which on any given Business Day will be an amount calculated in the same manner as that for the Balancing Amount, although the actual amounts may differ if the Redemption List is not identical to the Creation List. To the extent that the Redemption Securities on the Redemption List have a value greater than the NAV of FITRs being redeemed, a cash payment equal to the differential is required to be paid by the redeeming beneficial owner (through the Authorized Participant) to the Index Fund. The Index Fund will transfer the Cash Redemption Payment and the Redemption Securities to the redeeming beneficial owner on T+1, which is the Business Day following the Transmittal Date on which request for redemption is made. The Index Fund may also make redemptions in ''cash in lieu'' of transferring one or more Redemption Securities to a redeemer if the Index Fund determines, in its discretion, that such method is warranted in the interest of such fund.

7. Passive Management of the Index Funds

The Applicant characterizes the Index Funds as being passively managed. According to the Applicants, passive strategies attempt to track the performance of an underlying benchmark with a stated minimum degree of precision. The analytics behind these strategies focus on reducing negative benchmark tracking differences by bringing a fund's portfolio cash flows in line with those of its benchmark index. In contrast, active managers seek to outperform the benchmark by taking risks involving departures from the benchmark. According to the Applicants, the FITRs' index tracking objective and methodology identifies and classifies the FITRs with other index-based ETFs and fixed income index funds. The Applicants states that any incidental out-performance of an Index Fund's Underlying Index will be achieved without taking significant interest rate or credit risk; the Advisor will look for securities lending and valuation opportunities in cash flow packaging or will use instruments with similar cash flows which are temporarily selling at attractive prices. Applicants note that these are all common fixed income index fund techniques.

8. The FITRs and Creation Unit Aggregation Clearing Process

FITRs traded in the secondary market will be cleared and settled on a ''regular way'' basis, currently on T+3, through DTC and NSCC and therefore, these transactions will be processed and settled pursuant to DTC and NSCC procedures including the NSCC guarantee of settlement within the NSCC system. The Amex provides daily trade data to the NSCC for clearing in accordance with NSCC rules and procedures.

Purchases and redemptions of Creation Unit Aggregations of FITRs will settle according to the government securities markets' convention of T+1 settlement. Creation Unit Aggregations of FITRs will be debited or credited directly by BNY, as Transfer Agent, in the DTC accounts of the Authorized Participants. BNY will effect the Fund's side of the transaction (issuance of the FITRs owed to the Authorized Participant in the case of a creation, and the transfer of Redemption Securities to the Authorized Participant in the case of a redemption) only after confirmation of receipt of the Authorized Participant's incoming cash and/or security transfer (Deposit Securities and Balancing Amount in the case of a creation, and

a Creation Unit Aggregation of FITRs and Cash Redemption Payment in the case of a redemption).

When purchasing FITRs in Creation Unit Aggregations, the Authorized Participant will tender to BNY in its capacity as Custodian, the Deposit Securities through Fedwire, the Government Securities Clearing Corporation or any other means acceptable to BNY for the delivery of Government Securities and Balancing Amount by any means acceptable to BNY. As Transfer Agent, BNY will observe the pending receipt of any Balancing Amount and the Deposit Securities go ''final'' on its settlement system, and take the necessary steps to release the FITRs in Creation Unit Aggregations and credit them in real time to the Authorized Participant's DTC account, completing the transaction. Once such FITRs are acknowledged and credited by DTC, the delivery will go ''final'' and appear in the Authorized Participant's DTC account, all on T+1.

Alternatively, Creation Unit Aggregations may be purchased by an Authorized Participant in advance of receipt by BNY of all or a portion of the applicable Deposit Securities. In these circumstances, the Authorized Participant must deposit with BNY, as Custodian, cash in an amount equal to the sum of (i) the Balancing Amount, plus (ii) 105% of the market value of any, or all, of the undelivered Deposit Securities (the ''Additional Cash Deposit''). An additional amount of cash will be, required to be deposited with BNY pending delivery of the missing Deposit Securities to the extent necessary to maintain the Additional Cash Deposit with BNY in an amount at least equal to 105% of the daily market-to-market value of the missing Deposit Securities. To the extent that missing Deposit Securities are not received by 1:00 p.m., ET, on the first Business Day next following the day on which the purchase order is deemed received by the Distributor or in the event a market-to-market payment is not made within one Business Day following notification by the Distributor that such a payment is required, the Trust may instruct BNY to use the cash on deposit to purchase the missing Deposit Securities in order to complete the purchase order. The Authorized Participant will be liable to the Trust and Fund for the costs incurred by the Trust in connection with any such purchases. These costs will include the amount by which the actual purchase price of the Deposit Securities exceeds the market value of such Deposit Securities on the day the purchase order was deemed received by the Distributor plus the brokerage and related transaction costs associated with such purchases. BNY will return any unused portion of the Additional Cash Deposit once all of the missing Deposit Securities have been properly received by BNY or purchased by the Trust and deposited into the Trust.

When redeeming FITRS in Creation Unit Aggregations the Authorized Participant will transfer to BNY, as Transfer Agent for cancellation, the requisite amount of FITRs through DTC. The Authorized Participant will deliver to BNY as Custodian a cash payment equal to any differential that is required to be paid through the Fedwire. BNY will then transfer the requisite Redemption Securities and any Cash Redemption Payment for receipt by the Authorized Participant on T+1.

In all instances, if an order is not placed in proper form or federal funds in the appropriate amount are not received in accordance with the terms of the Participant Agreement, BNY may reject the order.

9. Dividend Distributions

Dividends from net investment income will be declared and paid at least annually by each Index Fund in the same manner as by other open-end investment companies. Certain of the Index Funds may pay dividends on a semi-annual or more frequent basis. Distributions of realized securities gains, if any, generally will be declared and paid once a year. The dividend amount paid by each Index Fund will be made available on *http://www.amextrader.com.*

The Trust will not make the DTC book-entry Dividend Reinvestment Service available for use by beneficial owners for reinvestment of their cash proceeds, but certain individual brokers may make a dividend reinvestment service available to their clients. The Statement of Additional Information (''SAI'') will inform investors of this fact and direct interested investors to contact such investor's broker to ascertain the availability and a description of such a service through such broker.

The Trust will furnish notifications with respect to each distribution and an annual notification as to the tax status of such Fund's distributions to the DTC Participants for distribution to beneficial owners of FITRs of each Index Fund. The Trust will also distribute its annual report containing audited financial statements and copies of annual and semi-annual shareholder reports to the DTC Participants for distribution to beneficial owners of FITRs.

10. Dissemination of Fund Information

The Custodian of each Index Fund, through NSCC, will make available prior to the opening on the Exchange on each Business Day, the Creation List identifying by name and quantity the Deposit Securities required for a Creation Unit Aggregation, the Redemption List identifying by name and quantity the Redemption Securities for such Index Fund, as well as information regarding the Balancing Amount and the Cash Redemption Payment. The NAV for each Index Fund will be calculated and disseminated on each Business Day by the Custodian in the manner described in the SAI for each such Fund. On Business Days, the Amex with respect to each Index Fund intends to disseminate, every 15 seconds, during regular Amex trading hours, through the facilities of the Consolidated Tape Association (''CTA''), Network B, an amount per FITR for each Index Fund.

In this regard, the Amex will disseminate an amount per FITR every 15 seconds, as stated above, for each Index Fund representing its approximate intraday value: The IntraDay Proxy Value (''IDPV''). The data used to provide the IDPV for FITRs will come from third party pricing sources that frequently obtain dealers' yield quotes for the OTR Treasuries and also for the quoted spreads applicable to various off the run Treasuries and other government securities.

The IDPV will be calculated by the Amex but it will not be calculated on days the Government Securities markets are closed and the Amex is open. To calculate the IDPV, the Amex intends to obtain primary pricing information from Reuters but may use other or additional third-party pricing sources in the event that Reuters' pricing information becomes unavailable.[24] The Amex will not be involved in, or responsible for, the calculation of the estimated Balancing Amount nor will it guarantee the accuracy or completeness of the IDPV. Neither the Trust nor any Index Fund will be involved in, or responsible for, the calculation or dissemination of

[24] Applicants have chosen to use Reuters initially, as the source for primary bond pricing information because it is a major provider of financial data information, including bond-pricing information. Applicants have been advised that Reuters obtains Government Securities pricing information directly from major participants in the government securities markets and updates such information on a frequent basis. In the future, another third-party pricing data provider may be utilized if Applicants believe that such source provides equivalent or more accurate data, and such a change in the primary data provider will be fully disclosed.

the IDPV, and will make no warranty as to its accuracy.

The Trust intends to maintain a website that will include the Prospectus and SAI, as well as additional quantitative information on a per FITR basis, including, but not limited to: (a) The prior Business Day's NAV and the bid price (the ''Bid Price'') [25] at the time of calculation of such NAV, and a calculation of the premium or discount of the Bid Price against such NAV; and (b) data in chart format displaying the frequency distribution of discounts and premiums of the daily Bid Price against the NAV, within appropriate ranges, for each of the previous calendar quarters. The Amex intends to disseminate a variety of data with respect to each Index Fund listed on the Amex on a daily basis by means of CTA and CQ High Speed Lines; information with respect to recent NAV, dividends, shares outstanding, estimated cash amount, and total cash amount per Creation Unit Aggregation will be made available daily prior to the opening of the Amex. When and if yield and spread quotations for each Index Fund are made available, they will not be disseminated by the Index Fund. However, the yields of the underlying OTR Treasuries are widely available through various quotation services (*e.g.*, Bloomberg, Reuters, ILX Systems).

The Exchange states that daily and 3:00 p.m. market prices of each Index Fund's Deposit Securities are readily available from a variety of sources, including, as applicable, the Exchange, automated quotation systems, published or other public sources or on-line information services such as Dow Jones Capital Markets, Bridge and Bloomberg. Similarly, the Exchange states that information regarding market prices and volume of FITRs will be broadly available on a real time basis throughout the trading day. Information on the Underlying Indices will be limited or unavailable on days when the Government Securities markets are closed. The previous day's closing price and volume information for FITRs will be published daily in the financial sections of many newspapers.

11. Criteria for Initial and Continued Listing

FITRs are subject to the criteria for initial and continued listing of Index Fund Shares in Rule 1002A. A minimum of two Creation Units (*e.g.*, 50,000 FITRs per Creation Unit) will be required to be outstanding at the start of trading. This minimum number will be comparable to requirements that have been applied to previously listed series of Portfolio Depositary Receipts and Index Fund Shares.

The Exchange believes that the proposed minimum number of Shares outstanding at the start of trading is sufficient to provide market liquidity and to further the Fund's objective to seek to provide investment results that correspond generally to the price and yield performance of the applicable Index.

12. Original and Annual Listing Fees

The Amex original listing fee applicable to the listing of FITRs is $5,000 for each Index Fund. In addition, the annual listing fee applicable to the Fund under Section 141 of the Amex *Company Guide* will be based upon the year-end aggregate number of outstanding shares in all Index Funds of the Trust listed on the Exchange.

13. Stop and Stop Limit Orders

Amex Rule 154, Commentary .04(c) provides that stop and stop limit orders to buy or sell a security (other than an option, which is covered by Rule 950(f) and Commentary thereto) the price of which is derivatively priced upon another security or index of securities, may with the prior approval of a Floor Official, be elected by a quotation, as set forth in Commentary .04(c) (i–v). The Exchange has designated Index Fund Shares, including FITRs as eligible for this treatment.[26]

14. Rule 190

Rule 190, Commentary .04 applies to Index Fund Shares listed on the Exchange, including FITRs. Commentary .04 states that nothing in Rule 190(a) should be construed to restrict a specialist registered in a security issued by an investment company from purchasing and redeeming the listed security, or securities that can be subdivided or converted into the listed security, from the issuer as appropriate to facilitate the maintenance of a fair and orderly market.

15. Prospectus Delivery

The Exchange, in an Information Circular to Exchange members and member organizations, will inform members and member organizations, prior to commencement of trading, of the applicable Product Description delivery obligation to investors purchasing FITRs. The Trust's Application included a request for an exemptive order granting relief from certain prospectus delivery requirements under section 24(d) of the 1940 Act,[27] which the Commission granted.[28] Therefore, Amex Rule 1000A, Commentary .03 applies. The product description used in reliance on the section 24(d) exemption will comply with all representations made therein and all conditions thereto.

16. Trading Halts

In addition to other factors that may be relevant, the Exchange may consider factors such as those set forth in Rule 918C (b) in exercising its discretion to halt or suspend trading in Index Fund Shares, including FITRs. These factors would include, but are not limited to: (1) The extent to which trading is not occurring in securities underlying the index; or (2) whether other unusual conditions or circumstances detrimental to the maintenance of a fair and orderly market are present.[29] In addition, trading in Shares will be halted if the circuit breaker parameters under Amex Rule 117 have been reached.

17. Suitability

Prior to commencement of trading, the Exchange will issue an Information Circular informing members and member organizations of the characteristics of the Index Funds and of applicable Exchange rules, as well as of the requirements of Amex Rule 411 (Duty to Know and Approve Customers).

18. Purchases and Redemption in Creation Unit Size

In the Information Circular referenced above, members and member organizations will be informed that procedures for purchases and redemptions of Shares in Creation Unit Size are described in the Fund prospectus and Statement of Additional Information, and that Shares are not individually redeemable but are redeemable only in Creation Unit Size aggregations or multiples thereof.

19. Surveillance

Exchange surveillance procedures applicable to trading in the proposed FITRs are comparable to those

[25] The Bid Price per FITR of an Index Fund is determined using the highest bid price on the Exchange on which FITRs of such Index Fund are listed for trading as of the time of calculation of such Index Fund's NAV.

[26] *See* Securities Exchange Act Release No. 29063, note 9 (April 10, 1991), 56 FR 15652 (April 17, 1991) (File No. SR–Amex-90–31) regarding Exchange designation for equity derivative securities as eligible for such treatment under Rule 154, Commentary .04(c).

[27] *See* Investment Company Act Release No. 25725 (September 3, 2002) , 67 FR 57464 (September 10, 2002).

[28] *See* Investment Company Act Release No. 25759 (September 27, 2002).

[29] *See* Amex Rule 918C.

applicable to other Index Fund Shares currently trading on the Exchange. The Exchange represents that its surveillance procedures are adequate to properly monitor the trading of the FITRs.[30]

Statutory Basis

The Exchange believes that the proposed rule change is consistent with section 6(b) of the Exchange Act,[31] in general, and furthers the objectives of section 6(b)(5),[32] in particular, in that it is designed to prevent fraudulent and manipulative acts and practices, to promote just and equitable principles of trade, to foster cooperation and coordination with persons engaged in regulating, clearing, settling, processing information with respect to, and facilitating transaction in securities, and in general to protect investors and the public interest.

B. Self-Regulatory Organization's Statement on Burden on Competition

The Exchange does not believe that the proposed rule change will impose any burden on competition.

C. Self-Regulatory Organization's Statement on Comments on the Proposed Rule Change Received From Members, Participants or Others

No written comments were solicited or received with respect to the proposed rule change.

III. Commission's Findings and Order Granting Accelerated Approval of Proposed Rule Change

After careful review, the Commission finds that implementation of the proposed rule change is consistent with the requirements of section 6 of the Exchange Act,[33] and the rules and regulations thereunder applicable to a national securities exchange.[34] Specifically, the Commission believes that the proposal is consistent with section 6(b)(5) of the Exchange Act.[35] The Commission believes that the Exchange's proposal to list and trade FITRs will provide investors with a convenient way of participating in the investment grade government debt securities.[36] The Exchange's proposal should help to provide investors with increased flexibility in satisfying their investment needs by allowing them to purchase and sell securities at negotiated prices throughout the business day that replicate the performance of several portfolios of fixed income securities. The Commission believes that the availability of the FITRs will provide an instrument for investors to achieve desired investment results that correspond generally to the price and yield performance of the underlying U.S. Treasury, Government/Credit, or Corporate Bond Index. The investment objective of each FITRs will be to provide investment results that correspond generally to the price and yield performance of the underlying index based on fixed income securities. Accordingly, the Commission finds that the Exchange's proposal will facilitate transactions in securities, remove impediments to and perfect the mechanism of a free and open market and a national market system, and, in general, protect investors and the public interest, and is not designed to permit unfair discrimination between customers, issuers, brokers, or dealers.[37]

The Commission finds that because of the nature of the particular debt securities to be included in the portfolios of the Index Fund Shares (*i.e.*, U.S. Government securities and investment grade government debt securities), the pricing information should be available. The Exchange has indicated that the underlying indexes are widely disseminated by various media such as Bloomberg, Reuters, Dow Jones Telerate. Additional analytical data and pricing information may also be obtained through vendors such as Barrons, the *New York Times,* Grants Interest Rate Observer, and Bondweek. In addition, the Ryan indexes are published daily on two Ryan websites.[38]

The Commission also believes that pricing information for the Treasury securities should also be available. Quote and trade information regarding Treasury securities is widely available to market participants from a variety of sources. The electronic trade and quote systems of the dealers and inter-dealer brokers are one such source. Groups of dealers and inter-dealer brokers also furnish trade and quote information to vendors such as Bloomberg, Reuters, Bridge, Moneyline, Telerate, and CQG.[39]

The Commission has also granted the issuer, ETF Advisors Trust, exemptive relief from section 24(d) of the 1940 Act[40] so that dealers may effect secondary market transaction in Barclays ETF shares without delivery of a prospectus to the purchaser. Instead, under the exemption and under Amex's listing standards, sales in the secondary market must be accompanied by a ''product description,'' describing the ETF and its shares. The Commission believes a product description, which not only highlights the basic characteristics of the product and the manner in which the ETF shares trade in the secondary market, but also highlights the differences of the Index Fund Shares from existing equity ETFs and notes the unique characteristics and risks of this product, should provide market participants with adequate notice of the salient features of the product.

The Commission also notes that upon the initial listing of any ETF under Amex Rule 1000A the Exchange issues a circular to its members explaining the unique characteristics and risks of the security; in this instance, Fixed Income ETFs. In particular, the circular should include, among other things, a discussion of the risks that may be associated with the Index Fund Shares, in addition to details on the composition of the fixed income indices upon which they are based and how each Index Fund Shares would use a representative sampling strategy to track its index. The circular also should note Exchange members' responsibilities under Exchange Rule 411 (''know your customer rule'') regarding transactions in such Fixed Income ETFs. Exchange Rule 411 generally requires that members use due diligence to learn the essential facts relative to every customer, every order or account accepted.[41] The circular also will address members' prospectus delivery requirements as well as highlight the characteristics of purchases in Index Fund Shares, including that they only are redeemable in Creation Unit size aggregations. Based on these factors, the

[30] Telephone conversation between Michael Cavalier, Associate General Counsel, American Stock Exchange and Florence Harmon, Senior Special Counsel, and Marc McKayle, Special Counsel, Division of Market Regulation, Commission, on October 28, 2002.

[31] 15 U.S.C. 78f.

[32] 15 U.S.C. 78f(b)(5).

[33] 15 U.S.C. 78f.

[34] 15 U.S.C. 78f(b)(5).

[35] *Id.*

[36] In approving this proposal, the Commission has considered the proposed rule's impact on efficiency, competition, and capital formation. 15 U.S.C. 78c(f).

[37] Pursuant to Section 6(b)(5) of the Act, the Commission must predicate approval of exchange trading for new products upon a finding that the introduction of the product is in the public interest. Such a finding would be difficult with respect to a product that served no investment, hedging or other economic functions, because any benefits that might be derived by market participants would likely be outweighed by the potential for manipulation, diminished public confidence in the integrity of the markets, and other valid regulatory concerns.

[38] *See* note 14, *supra.*

[39] The Commission notes that the underlying index value is not disseminated every 15 seconds in contrast to the IDPV and notes that this is predicated on the income components in this product.

[40] 15 U.S.C. 80a–24(d).

[41] Amex Rule 411.

Commission finds that the proposal to trade the Index Fund Shares is consistent with Section 6(b)(5) of the Exchange Act.[42]

The Commission also notes that the Exchange's rules and procedures should address the special concerns attendant to the trading of new derivative products. In particular, by imposing the Index Fund Share listing standards in Amex Rule 1000A, and addressing the suitability, disclosure, and compliance requirements noted above, the Commission believes that the Exchange has addressed adequately the potential problems that could arise from the derivative nature of the FITRs.

In particular, the Commission finds that adequate rules and procedures exist to govern the trading of Index Fund Shares, including FITRs. Index Fund Shares will be deemed equity securities subject to Amex rules governing the trading of equity securities. These rules include: General and Floor Rules, such as priority, parity, and precedence of orders, market volatility related trading halt provisions pursuant to Rule 117, members dealing for their own accounts, specialists, odd-lot brokers, and registered traders, and handling of orders and reports;[43] Office Rules, such as conduct of accounts, margin rules, and advertising;[44] and Contracts in Securities, such as duty to report transactions, comparisons of transactions, marking to the market, delivery of securities, dividends and interest, closing of contracts, and money and security loans.[45] The Amex also will consider halting trading in any series of Index Funds Shares under certain other circumstances including those set forth in Amex Rule 918C(b)(4) regarding the presence of other unusual conditions or circumstances detrimental to the maintenance of a fair and orderly market. The Commission believes that the application of these rules should strengthen the integrity of the FITRs.

The Commission believes that the Amex has appropriate surveillance procedures in place to detect and deter potential manipulation for similar index-linked products. By applying these procedures to the FITRs, the Commission believes that the potential for manipulation should be minimized, while protecting investors and the public interest.

The Exchange requests that the proposed rule change be approved on an accelerated basis pursuant to section 19(b) of the Exchange Act.[46] The Exchange believes there is good cause to grant accelerated approval insofar as the 1940 Act Application relating to the FITRs has been reviewed by the Division of Investment Management and notice of the Application has been published in the **Federal Register**.[47] No comments were submitted and the Commission granted the relief requested in the Application.[48] The FITRs will trade on the Exchange in the same manner as Index Fund Shares previously approved by the Commission, including Index Fund Shares based on an index of fixed income securities.[49] The proposed rule change presents no novel issues with respect to trading of Index Fund Shares. The Exchange anticipates that FITRs will be in a position to begin trading on the Exchange prior to the 30–35 period for Commission action under section 19(b) of the Exchange Act[50] and accelerated approval will permit Exchange trading to begin within the time frame established by the Trust. Based on the above, the Commission finds good cause to accelerate approval of the proposed rule change, as amended, prior to the thirtieth day after the date of publication of notice of filing thereof in the **Federal Register**. The Commission believes, therefore, that granting accelerated approval of the proposed rule change is appropriate and consistent with section 6 of the Act.[51]

IV. Solicitation of Comments

Interested persons are invited to submit written data, views and arguments concerning the foregoing, including whether the proposed rule change is consistent with the Exchange Act. Persons making written submissions should file six copies thereof with the Secretary, Securities and Exchange Commission, 450 Fifth Street, NW., Washington, DC 20549–0609. Copies of the submission, all subsequent Amendments, all written statements with respect to the proposed rule change that are filed with the Commission, and all written communications relating to the proposed rule change between the Commission and any person, other than those that may be withheld from the public in accordance with the provisions of 5 U.S.C. 552, will be available for inspection and copying in the Commission's Public Reference Room. Copies of such filing will also be available for inspection and copying at the principal office of the Amex. All submissions should refer to File No. SR–AMEX–2001–32 and should be submitted by November 27, 2002.

It is therefore ordered, pursuant to section 19(b)(2) of the Exchange Act,[52] that the proposed rule change (File No. SR–Amex–2001–32), as amended, is hereby approved on an accelerated basis.

For the Commission, by the Division of Market Regulation, pursuant to delegated authority.[53]

Margaret H. McFarland,

Deputy Secretary.

[FR Doc. 02–28187 Filed 11–5–02; 8:45 am]

BILLING CODE 8010–01–P

[42] 15 U.S.C. 78f(b)(f).

[43] Amex Rules 1–236.

[44] Amex Rules 300–590.

[45] Amex Rules 700–891.

[46] 15 U.S.C 78s(b).

[47] *See* Investment Company Act Release No. 25725 (September 3, 2002), 67 FR 57464 (September 10, 2002).

[48] *See* Investment Company Act Release No. 25759 (September 27, 2002).

[49] *See* Securities Exchange Act Release No. 46252 (July 24, 2002), 67 FR 49715 (July 31, 2002).

[50] 15 U.S.C. 78s(b).

[51] 15 U.S.C. 78f.

[52] 15 U.S.C. 78s(b)(2).

[53] 17 CFR 200.3–3(a)(12).

SECURITIES AND EXCHANGE COMMISSION

[Release No. 34–46743; File No. SR–CBOE–2002–26]

Self-Regulatory Organizations; Notice of Filing of Proposed Rule Change by the Chicago Board Options Exchange, Inc. To Increase Position and Exercise Limits for Options on the DIAMONDS Trust

October 30, 2002.

Pursuant to Section 19(b)(1) of the Securities Exchange Act of 1934 (''Act''),[1] and Rule 19b-4 thereunder,[2] notice is hereby given that on May 20, 2002, the Chicago Board Options Exchange, Inc. (''CBOE'' or ''Exchange'') filed with the Securities and Exchange Commission (''SEC'' or ''Commission'') the proposed rule change as described in Items I, II, and III below, which Items have been prepared by the Exchange. The Commission is publishing this notice to solicit comments on the proposed rule change from interested persons.

I. Self-Regulatory Organization's Statement of the Terms of Substance of the Proposed Rule Change

The CBOE proposes to increase position and exercise limits for options on the DIAMONDS Trust (''DIA'') to 300,000 contracts on the same side of the market. The Exchange's reporting requirements for DIAMONDS Trust options will serve to identify options holdings and information concerning

[1] 15 U.S.C. 78s(b)(1).

[2] 17 CFR 240.19b-4.

the hedging of these positions. The text of the proposed rule change is set forth below. Proposed new language is *italicized;* proposed deletions are in brackets.

* * * * *

Chapter IV—Business Conduct

Rule 4.11. Position Limits NO CHANGE

* * * Interpretations and Policies:

.01 through .06 NO CHANGE.

.07 The position limits under Rule 4.11 applicable to options on shares or other securities that represent interests in registered investment companies (or series thereof) organized as open-end management investment companies, unit investment trusts or similar entities that satisfy the criteria set forth in Interpretation and Policy .06 under Rule 5.3 shall be the same as the position limits applicable to equity options under Rule 4.11 and Interpretations and Policies thereunder. The position limits under Rule 4.11 applicable to options on the Nasdaq-100 Index Tracking Stock℠ (''QQQ'') *and the DIAMONDS Trust (DIA)* shall be 300,000 option contracts.

* * * * *

Rule 4.12. Exercise Limits NO CHANGE

* * * Interpretations and Policies:

.01 NO CHANGE.

.02 The exercise limits established under Rule 4.12 in respect of options on shares or other securities that represent interests in registered investment companies (or series thereof) organized as open-end management investment companies, unit investment trusts or similar entities that satisfy the criteria set forth in Interpretation and Policy .06 under Rule 5.3 shall be equivalent to the position limits prescribed for such options in Interpretation and Policy .07[6] under Rule 4.11, subject to any exemptions granted in respect of such position limits.

* * * * *

Rule 4.13. Reports Related to Position Limits

(a) NO CHANGE.

(b) In addition to the reporting requirement described in paragraph (a) of this Rule, each member (other than an Exchange market-maker or DPM) that maintains a position in excess of 10,000 non-FLEX equity option contracts or 100,000 QQQ or DIA contracts on the same side of the market on behalf of its own account or for the account of a customer, shall report information as to whether such positions are hedged, and provide documentation to as to how such contracts are hedged, in a manner and form prescribed by the Exchange. In addition, whenever the Exchange determines based on a report to the Department of Market Regulation or otherwise, that a higher margin requirement is necessary in light of the risks associated with an under-hedged QQQ *or DIA* option position in excess of 100,000 contracts or Non-FLEX equity option position in excess of 10,000 contracts on the same side of the market, the Exchange may consider imposing additional margin upon the account maintaining such under-hedged position, pursuant to its authority under Exchange Rule 12.10. Additionally, it should be noted that the clearing firm carrying the account will be subject to capital charges under SEC Rule 15c3–1 to the extent of any margin deficiency resulting from the higher margin requirements.

(c)–(d) NO CHANGE.

* * * * *

II. Self-Regulatory Organization's Statement of the Purpose of, and Statutory Basis for, the Proposed Rule Change

In its filing with the Commission, the CBOE included statements concerning the purpose of, and basis for, the proposed rule change and discussed any comments it received on the proposed rule change. The text of these statements may be examined at the places specified in Item IV below. The Exchange has prepared summaries, set forth in Sections A, B, and C below, of the most significant aspects of such statements.

A. Self-Regulatory Organization's Statement of the Purpose of, and Statutory Basis for, the Proposed Rule Change

1. Purpose

The Commission has stated that position and exercise limits ''must not be established at levels that are so low as to discourage participation in the options market by institutions and other investors with substantial hedging needs or to prevent specialists and market-makers from adequately meeting their obligations to maintain a fair and orderly market.'' [3]

The DIAMONDS Trust, based on the Dow Jones Industrial Average, is among the most actively traded exchange-traded funds, averaging 4.5 million shares per day during the previous six months. Moreover, the components comprising the fund are themselves among the most actively traded and widely held securities listed in the U.S. As shown in the following table, the average number of shares outstanding for the 30 components of the DJIA is 2.55 billion shares, ranging from a high of 9.9 billion shares (General Electric Co.) to a low of 291.7 million shares (Eastman Kodak Co.). The 6-month average daily trading volume ranges from a high of 48 million shares per day (Intel Corp.) to a low of 2 million shares per day (Caterpillar, Inc.).

	Ticker	Company name	Shares out (millions)	Stock volume 6-mo ADV
1	INTC	INTEL CORP	6,703.00	48,065,436
2	MSFT	MICROSOFT CORP	5,415.46	29,527,880
3	GE	GENERAL ELECTRIC CO	9,935.63	23,410,290
4	C	CITIGROUP INC	5,165.40	13,221,095
5	T	AT&T CORP	3,566.31	12,964,184
6	XOM	EXXON MOBIL CORPORATION	6,792.60	10,953,032
7	HPQ	HEWLETT-PACKARD CO	3,019.17	10,634,250
8	JPM	JP MORGAN CHASE & CO	1,990.20	10,080,997
9	IBM	INTL BUSINESS MACHINES CORP	1,716.94	8,435,996
10	DIS	THE WALT DISNEY CO.	2,039.34	8,013,419
11	WMT	WAL-MART STORES INC	4,451.23	7,512,838
12	JNJ	JOHNSON & JOHNSON	3,047.15	7,264,796
13	SBC	SBC COMMUNICATIONS INC	3,340.17	7,064,081

[3] See H.R. Rep. No. IFC–3, 96th Cong., 1st Sess. At 189–91 (Comm. Print 1978).

Ticker	Company name	Shares out (millions)	Stock volume 6-mo ADV
14 HD	HOME DEPOT INC	2,350.05	6,898,992
15 MRK	MERCK & CO., INC.	2,271.09	6,878,693
16 MO	PHILIP MORRIS COMPANIES INC	2,147.30	5,855,147
17 AXP	AMERICAN EXPRESS CO	1,340.95	5,017,522
18 KO	COCA-COLA CO/THE	2,484.72	4,773,278
19 MCD	MCDONALD'S CORPORATION	1,271.96	4,682,622
20 BA	BOEING CO	838.71	3,947,814
21 GM	GENERAL MOTORS CORP	560.50	3,845,899
22 HON	HONEYWELL INTERNATIONAL INC	814.97	3,721,316
23 AA	ALCOA INC	846.65	3,578,749
24 PG	PROCTER & GAMBLE CO	1,299.61	3,223,338
25 DD	DU PONT (E.I.) DE NEMOURS	992.95	3,137,774
26 IP	INTERNATIONAL PAPER CO	482.72	2,851,071
27 EK	EASTMAN KODAK CO	291.74	2,811,618
28 UTX	UNITED TECHNOLOGIES CORP	472.86	2,540,922
29 MMM	3M CO	389.35	2,014,652
30 CAT	CATERPILLAR INC	343.45	1,988,112
	Average	2,546.07	8,830,527

The Exchange notes that there are currently no position limits for DJX options, which are the same size and have an equivalent economic payoff as options on DIAMONDS. Based on DIAMONDS portfolio holdings as of May 6, 2002, the proposed position limit of 300,000 contracts represents a holding of just over 2 million shares of each security comprising the DJIA, which is less than 1% of each components' outstanding shares and, in most cases, equal to no more than 1 day's trading volume. The 300,000 contract position limit is currently in place for options on the Nasdaq-100 Index Tracking Stock (QQQ). The Exchange believes that increasing position limits for this product will lead to a more liquid and competitive market environment for DIA options that will benefit customers interested in this product.

Reporting Requirements

Consistent with the reporting requirement for QQQ options, the Exchange will require that each member or member organization that maintains a position on the same side of the market in excess of 100,000 contracts in the DIA option class, for its own account or for the account of a customer report certain information. This data would include, but would not be limited to, the option position, whether such position is hedged and if so, a description of the hedge and if applicable, the collateral used to carry the position. Exchange market-makers (including DPMs) would continue to be exempt from this reporting requirement as market-maker information can be accessed through the Exchange's market surveillance systems. In addition, the general reporting requirement for customer accounts that maintain a position in excess of 200 contracts will remain at this level for DIA options.[4]

2. Statutory Basis

The Exchange represents that the proposed rule change is consistent with Section 6(b) of the Act,[5] in general, and furthers the objectives of Section 6(b)(5),[6] in particular, in that it is designed to prevent fraudulent and manipulative acts and practices, to promote just and equitable principles of trade, to foster cooperation and coordination with persons engaged in facilitating transactions in securities, to remove impediments to and perfect the mechanism of a free and open market and a national market system, to protect investors and the public interest and is not designed to permit unfair discrimination between customers, issuers, brokers, or dealers.

B. Self-Regulatory Organization's Statement on Burden on Competition

The Exchange does not believe that the proposed rule change will impose any burden on competition that is not necessary or appropriate in furtherance of the purposes of the Act.

C. Self-Regulatory Organization's Statement on Comments on the Proposed Rule Change Received From Members, Participants, or Others

No written comments were solicited or received with respect to the proposed rule change.

[4] See CBOE Rule 4.13(a).

[5] 15 U.S.C. 78f(b).

[6] 15 U.S.C. 78f(b)(5).

III. Date of Effectiveness of the Proposed Rule Change and Timing for Commission Action

Within 35 days of the date of publication of this notice in the **Federal Register** or within such longer period (i) as the Commission may designate up to 90 days of such date if it finds such longer period to be appropriate and publishes its reasons for so finding or (ii) as to which the Exchange consents, the Commission will:

(A) by order approve such proposed rule change, or

(B) institute proceedings to determine whether the proposed rule change should be disapproved.

IV. Solicitation of Comments

Interested persons are invited to submit written data, views, and arguments concerning the foregoing, including whether the proposed rule change is consistent with the Act. Persons making written submissions should file six copies thereof with the Secretary, Securities and Exchange Commission, 450 Fifth Street, NW., Washington, DC 20549–0609. Copies of the submission, all subsequent amendments, all written statements with respect to the proposed rule change that are filed with the Commission, and all written communications relating to the proposed rule change between the Commission and any person, other than those that may be withheld from the public in accordance with the provisions of 5 U.S.C. 552, will be available for inspection and copying at the Commission's Public Reference Room. Copies of such filing will also be available for inspection and copying at the principal office of the Exchange. All

submissions should refer to the File No. SR–CBOE–2002–26 and should be submitted by November 27, 2002.

For the Commission, by the Division of Market Regulation, pursuant to delegated authority.[7]

Margaret H. McFarland,

Deputy Secretary.

[FR Doc. 02–28130 Filed 11–5–02; 8:45 am]

BILLING CODE 8010–01–P

SECURITIES AND EXCHANGE COMMISSION

[Release No. 34–46742; File No. SR–NASD–2002–123]

Self-Regulatory Organizations; Notice of Filing and Order Granting Accelerated Approval of a Proposed Rule Change and Amendment No. 1 by the National Association of Securities Dealers, Inc. Relating to Modification of the Trade or Move Process in the Nasdaq Order Collection and Display Facility (''SuperMontage'')

October 30, 2002.

Pursuant to section 19(b)(1) of the Securities Exchange Act of 1934 (''Act''),[1] and Rule 19b–4 thereunder,[2] notice is hereby given that on September 19, 2002, the National Association of Securities Dealers, Inc. (''NASD'' or ''Association'') through its subsidiary, The Nasdaq Stock Market, Inc. (''Nasdaq''), filed with the Securities and Exchange Commission (''Commission'' or ''SEC'') the proposed rule change as described in Items I and II below, which Items have been prepared by Nasdaq.[3] The Commission is publishing this notice to solicit comments on the proposed rule change and Amendment No. 1 from interested persons and to approve the proposal, as amended, on an accelerated basis.

I. Self-Regulatory Organization's Statement of the Terms of Substance of the Proposed Rule Change

Nasdaq proposes to amend NASD Rule 4613, ''Character of Quotations,'' to permit Nasdaq, upon the filing of a complaint by a member or an Unlisted Trading Privilege (''UTP'') Exchange, to declare null and void a Trade-or-Move Directed Order executed at or after 9:29:30 a.m. The text of the proposed rule change appears below. Proposed new language is in italics.

Rule 4613—Character of Quotations

(a)–(d) No Change.

(e) Locked and Crossed Markets.

(1) A market maker shall not, except under extraordinary circumstances, enter or maintain quotations in Nasdaq during normal business hours if:

(A) No Change.

(B) No Change.

(C) Obligations Regarding Locked/Crossed Market Conditions Prior to Market Opening

(i)–(vi) No Change.

(vii) A Trade or Move Directed Order that is executed at or after 9:29:30 may, upon the filing of a complaint by a member or UTP Exchange, be declared null and void in accordance with the procedures set forth in NASD Rule 11890.

* * * * *

II. Self-Regulatory Organization's Statement of the Purpose of, and Statutory Basis for, the Proposed Rule Change

In its filing with the Commission, Nasdaq included statements concerning the purpose of, and basis for, the proposed rule change, and discussed any comments it received on the proposed rule change. The text of these statements may be examined at the places specified in Item III below. Nasdaq has prepared summaries, set forth in Sections A, B, and C below, of the most significant aspects of such statements.

A. Self-Regulatory Organization's Statement of the Purpose of, and Statutory Basis for, the Proposed Rule Change

(1) *Purpose*

NASD Rule 4613(e) sets out the obligations of market participants who enter locking/crossing quotations during the pre-market opening period.[4] The rule requires a market participant that locks or crosses the market between 9:20 a.m. and 9:29:30 a.m. to send a Directed Order(s) with a ''Trade-or-Move'' designator (''Trade-or-Move Directed Order'') to the parties it is locking or crossing. The aggregate size of the Trade-or-Move Directed Order must be at least 10,000 shares for S&P 400 Index issues and Nasdaq 100 Index issues, and 5,000 shares for other issues.[5] Within ten seconds of the receipt of a Trade-or-Move Directed Order, the recipient must either trade in full with the incoming Trade-or-Move Directed Order or move its quote to a price that would unlock/uncross the market. In essence, the rule prohibits a market participant from locking/crossing the market during the ten minutes prior to the opening, unless the market participant is willing to commit the required number of shares.

Under the SuperMontage opening process, starting at 9:29:30 a.m., Nasdaq will take steps to resolve any outstanding locks/crosses by automatically executing any remaining overlapping buy and sell quotes using the most aggressively priced matching method contained in NASD Rule 4710(b)(3)(B). At the end of this automated process, which should be completed before the 9:30:00 a.m. market open, all locked /crossed markets will be eliminated.

A Trade-or-Move Directed Order has a minimum life of ten seconds by rule before it may be canceled, and the Directed Order process has a built-in five-second minimum life. Therefore, a market participant could receive an execution on a Trade-or-Move Directed Order sent in the final seconds before 9:29:30 a.m. and also receive an execution against its locking/crossing quote in the SuperMontage opening process. Thus, a market participant could be subject to a double execution (*i.e.*, against its quote during the SuperMontage opening process and for the outstanding Trade-or-Move Directed Order).

To address these potential double executions, Nasdaq believes that the recipient of a Trade-or-Move Directed Order should not execute the Trade-or-Move Directed Order after 9:29:30 a.m. and that members should consider Trade-or-Move Directed Orders pending at 9:29:30 a.m. to be null and void. According to Nasdaq, because member firms are concerned that they or others may inadvertently execute a Trade-or-Move Directed Order after 9:29:30 a.m. due to a system malfunction or human error, members have asked that Nasdaq staff be permitted to cancel trades resulting from the improper execution of a Trade-or-Move Directed Order.

NASD Rule 4613(e), as amended, will convey the authority to declare an execution null and void, and is based on the fact of executing a Trade-or-Move Directed Order at or after 9:29:30 a.m.

---

[7] 17 CFR 200.30–3(a)(12).

[1] 15 U.S.C. 78s(b)(1).

[2] 17 CFR 240.19b–4.

[3] On October 16, 2002, Nasdaq filed Amendment No. 1 to the proposal. Amendment No. 1 revised the proposal to: (1) provide that Nasdaq may declare null and void a trade resulting from the execution of a Trade-or-Move Directed Order during the SuperMontage pre-opening process only upon the filing of a complaint by a member or by an Unlisted Trading Privilege (''UTP'') Exchange; and (2) clarify that Nasdaq may declare null and void the execution of a Trade-or-Move Directed Order, not an execution against a quotation during the SuperMontage opening process.

[4] A locked market occurs when the quoted bid price is the same as the quoted ask price. A crossed market occurs when the quoted bid price is greater than the quoted ask price.

[5] *See* Securities Exchange Act Release No. 45990 (May 28, 2002), 67 FR 38535 (June 4, 2002 (order approving File No. SR–NASD–00–76).

Under the proposal, Nasdaq seeks the authority to declare null and void only the execution of the Trade-or-Move Directed Order, and not an execution against a quotation during the SuperMontage opening process. The execution of a market participant's Trade-or-Move Directed Order and against that market participant's locking/crossing quotation would constitute a double execution and, under the proposal, could trigger the filing of a complaint asking Nasdaq to declare null and void the Trade-or-Move Directed Order.

The procedures to declare an execution null and void are those contained in NASD Rule 11890, ''Clearly Erroneous Transactions.'' While the execution of a Trade-or-Move Directed Order is not ''clearly erroneous'' as ordinarily used in the context of NASD Rule 11890, Nasdaq believes that the procedures contained in that rule are particularly well suited to resolving the improper execution of a Trade-or-Move Directed Order. Thus, Nasdaq staff will be required only to determine that a Trade-or-Move Directed Order was executed at or after 9:29:30 a.m. to declare that execution null and void after following the complaint procedures set forth in NASD Rule 11890.

In particular, NASD Rule 11890 provides Nasdaq with the authority to receive petitions from market participants requesting that designated officers of Nasdaq review the terms of a transaction and nullify or modify it if the transaction is found to be clearly erroneous. Under subsections (a) and (b) of current NASD Rule 11890, a market participant may seek review by submitting a written complaint to Nasdaq Market Operations within specified time parameters. Subsection (c) of current NASD Rule 11890 sets forth the procedures for designated Nasdaq officers to review transactions on their own motion. In this proposal, Nasdaq seeks the authority to declare transactions null and void in accordance with current subsections (a) and (b) of NASD Rule 11890, but not with current subsection (c) of that rule.[6]

(2) *Basis*

Nasdaq believes that the proposed rule change is consistent with section 15A of the Act,[7] and, in particular with section 15A(b)(6),[8] which requires, among other things, that a registered national securities association's rules must be designed to prevent fraudulent and manipulative acts and practices, to promote just and equitable principles of trade, and, in general, to protect investors and the public interest. Nasdaq believes that the proposed rule change is consistent with these requirements because the amendment will enhance the interaction of the Trade-or-Move rule with the SuperMontage opening, thereby ensuring a smooth opening of daily trading for the ultimate benefit of investors.

B. Self-Regulatory Organization's Statement on Burden on Competition

Nasdaq does not believe that the proposed rule change will result in any burden on competition that is not necessary or appropriate in furtherance of the purposes of the Act.

C. Self-Regulatory Organization's Statement on Comments on the Proposed Rule Change Received from Members, Participants, or Others

Written comments were neither solicited nor received.

III. Solicitation of Comments

Interested persons are invited to submit written data, views, and arguments concerning the foregoing, including whether the proposed rule change is consistent with the Act. Persons making written submissions should file six copies thereof with the Secretary, Securities and Exchange Commission, 450 Fifth Street, NW, Washington, DC 20549–0609. Copies of the submission, all subsequent amendments, all written statements with respect to the proposed rule change that are filed with the Commission, and all written communications relating to the proposed rule change between the Commission and any person, other than those that may be withheld from the public in accordance with the provisions of 5 U.S.C. 552, will be available for inspection and copying in the Commission's Public Reference Room. Copies of such filing will also be available for inspection and copying at the principal office of the NASD. All submissions should refer to file number SR–NASD–2002–123 and should be submitted by November 27, 2002.

IV. Commission Findings and Order Granting Accelerated Approval of the Proposed Rule Change

Nasdaq has asked the Commission to approve the proposal on an accelerated basis to allow the implementation of SuperMontage, which began on October 14, 2002, to proceed smoothly. Nasdaq notes that market participants are familiar with the procedures used to declare a trade null and void, and that those procedures provide substantial protections to all parties.

The Commission finds that the proposed rule change is consistent with the requirements of the Act and the rules and regulations thereunder applicable to a national securities association and, in particular, with the requirements of section 15A(b)(6) of the Act[9] in that it is designed to promote just and equitable principles of trade, to remove impediments to and perfect the mechanism of a free and open market, and, in general, to protect investors and the public interest.[10] The Commission believes that the proposal will contribute to an orderly opening by facilitating the effective interaction of the Trade-or-Move requirements and the SuperMontage opening process. Specifically, the proposal will allow a member or UTP Exchange to file a complaint asking Nasdaq to declare null and void the execution of a Trade-or-Move Directed Order executed at or after 9:29:30 a.m., thereby providing a means to address the double execution that would result from the execution of a market participant's Trade-or-Move Directed Order at or after 9:29:30 a.m. and an execution against that market participant's locking/crossing quotation during the SuperMontage opening process. According to Nasdaq, market participants are concerned that a Trade-or-Move Directed Order pending at 9:29:30 a.m. could be executed inadvertently due to a system malfunction or human error. The Commission believes that the proposal provides a means to eliminate the double execution that could result from the inadvertent execution of a Trade-or-Move Directed Order during the SuperMontage opening process.

Under the proposal, a market participant must follow the procedures set forth in NASD Rule 11890 to ask Nasdaq to declare null and void a

[6] On September 23, 2002, Nasdaq filed proposed rule change SR–NASD–2002–127 to amend NASD Rule 11890 to clarify the scope of its authority to declare trades null and void. That proposal combines subsections (a) and (b) of current NASD Rule 11890 into a single subsection (a), and re-letters current subsection (c) as new subsection (b). If the Commission approves SR–NASD–2002–127, Nasdaq would have authority to review Trade-or-Move transactions only under new subsection (a) of NASD Rule 11890.

[7] 15 U.S.C. 78o–3.

[8] 15 U.S.C. 78o–3(b)(6).

[9] 15 U.S.C. 78o–3(b)(6).

[10] In approving the proposed rule, the Commission has considered the proposed rule's impact on efficiency, competition, and capital formation. 15 U.S.C. 78c(f).

Trade-or-Move Directed Order.[11] The Commission concluded previously that the procedures in NASD Rule 11890 promote the fair and efficient resolution of disputes involving clearly erroneous transactions.[12] Similarly, the Commission believes that the procedures in NASD Rule 11890 will provide a fair and efficient means for addressing a double execution resulting from the execution of a market participant's Trade-or-Move Directed Order and an execution against that market participant's locking/crossing quotation during the SuperMontage opening process.

The Commission finds good cause for approving the proposed rule change and Amendment No. 1 prior to the thirtieth day after the date of publication of notice of filing thereof in the **Federal Register**. Specifically, the Commission finds that the proposal will contribute to an orderly opening by facilitating the effective interaction of the Trade-or-Move requirements and the SuperMontage opening process. The Commission finds that Amendment No. 1 clarifies the proposal by indicating that Nasdaq will declare null and void the execution of a Trade-or-Move Directed Order only after a member or UTP Exchange files a complaint regarding the execution, and by specifying that Nasdaq would declare null and void the execution of a Trade-or-Move Directed Order rather than an execution against a locking/crossing quotation during the SuperMontage opening process. Accordingly, the Commission believes that there is good cause, consistent with sections 15A(b)(6) and 19(b)(2) of the Act,[13] to approve the proposal, as amended, on an accelerated basis.

It is therefore Ordered, pursuant to section 19(b)(2) of the Act, that the proposed rule change (SR–NASD–2002–123), as amended, is approved.

For the Commission, by the Division of Market Regulation, pursuant to delegated authority.[14]

Margaret H. McFarland,

Deputy Secretary.

[FR Doc. 02–28132 Filed 11–5–02; 8:45 am]

BILLING CODE 8010–01–P

[11] As discussed more fully above, the proposal does not authorize Nasdaq on its own motion to declare null and void the execution of a Trade-or-Move Directed Order.

[12] *See* Securities Exchange Act Release No. 39550 (January 14, 1998), 63 FR 4333 (January 28, 1998) (order approving File No. SR-NASD–96–51).

[13] 15 U.S.C. 78o–3(b)(6) and 78s(b)(2).

[14] 17 CFR 200.30–3(a)(12).

SECURITIES AND EXCHANGE COMMISSION

[Release No. 34–46744; File No. SR–NASD–2002–150]

Self-Regulatory Organizations; Notice of Filing and Immediate Effectiveness of Proposed Rule Change by the National Association of Securities Dealers, Inc. to Extend the Pilot Nasdaq Transaction Services Pricing Package

October 30, 2002.

Pursuant to section 19(b)(1) of the Securities Exchange Act of 1934 (''Act''),[1] and rule 19b–4 thereunder,[2] notice is hereby given that on October 18, 2002, the National Association of Securities Dealers, Inc. (''NASD'' or ''Association''), through its subsidiary, The Nasdaq Stock Market, Inc. (''Nasdaq'') filed with the Securities and Exchange Commission (''SEC'' or ''Commission'') the proposed rule change as described in items I and II below, which items have been prepared by the Exchange. The Commission is publishing this notice to solicit comments on the proposed rule change.

I. Self-Regulatory Organization's Statement of the Terms of Substance of the Proposed Rule Change

Nasdaq proposes to extend, through March 31, 2003, three components of the pilot Nasdaq Transaction Services pricing package currently in effect (''pricing pilot'').[3] The components of the pricing pilot extended by this proposal include: (1) The $0.002 order execution fee for Nasdaq National Market Execution System (''NNMS'' or ''SuperSoes'') orders; (2) the $0.001 per share rebate for liquidity providers on SuperSoes executions; and (3) the $0.01 quote update fee. Without such an extension, these pricing standards would terminate on October 31, 2002. The text of the proposed rule change is set forth below. Proposed new language is *italicized*; proposed deletions are in brackets.

* * * * *

7010. System Services

(a)–(i)(1) No change.

(i)(2) Nasdaq National Market Execution System (SuperSoes)

The following charges shall apply to the use of the Nasdaq National Market Execution System:

Order Entry Charge—$0.10 per order entry (entering party only)

Per share Charge—$0.001 per share executed for all fully or partially executed orders (entering party only)

Cancellation Fee—$0.25 per order cancelled (canceling party only)[4]

For a pilot period commencing on November 1, 2001 and lasting until [October] *March* 31, 200[2]*3*, the per share charge will be $0.002 per share executed for all fully or partially executed orders (entering party only).

(3) No change.

(4) Liquidity Provider rebate

For a pilot period commencing on November 1, 2001 and lasting until [October] *March* 31, 200[2]3:

(A) No change.

(B) No change.

(5) Quotation Updates

(A) Except as provided in subparagraph (B), for a pilot period commencing on February 1, 2002 and lasting until [October] *March* 31, 200[2]*3*, a fee of $0.01 per quotation update will be charged to NASD members that post quotations in the Nasdaq quotation montage. A ''quotation update'' includes any change to the price or size of a displayed quotation or reserve size.

(B) No change.

* * * * *

II. Self-Regulatory Organization's Statement of the Purpose of, and Statutory Basis for, the Proposed Rule Change

In its filing with the Commission, Nasdaq included statements concerning the purpose of and basis for the proposed rule change and discussed any comments it received on the proposed rule change. The text of these statements may be examined at the places specified in Item IV below. Nasdaq has prepared summaries, set forth in Sections A, B, and C below, of the most significant aspects of such statements.

A. Self-Regulatory Organization's Statement of the Purpose of, and Statutory Basis for, the Proposed Rule Change

1. Purpose

Nasdaq proposes to extend to March 31, 2003, three components of the pricing pilot. The components of the

[1] 15 U.S.C. 78s(b)(1).

[2] 17 CFR 240.19b–4.

[3] The pricing pilot components to be extended by this proposal were established by Securities Exchange Act Release No. 44910 (Oct. 5, 2001), 66 FR 52167 (Oct. 12, 2001) (SR–NASD–2001–67); No. 45342 (Jan. 28, 2002), 67 FR 5019 (Feb. 1, 2002) (SR–NASD–2001–96); and No. 45379 (Jan. 31, 2002), 67 FR 5867 (Feb. 7, 2002) (SR–NASD–2001–64 and SR–NASD–2001–68).

[4] Nasdaq corrected a typographical error that appeared in the proposed rule language. Telephone conversation between Teri Nelson Jacoby, Assistant General Counsel, Nasdaq and Susie Cho, Special Counsel, Division of Market Regulation, Commission, October 23, 2002.

pricing pilot extended by this proposal include: (1) The $0.002 order execution fee for SuperSoes orders; (2) the $0.001 per share rebate for liquidity providers on SuperSoes executions; and (3) the $0.01 quote update fee. Without the extension, the pricing pilot will expire on October 31, 2002. Nasdaq represents that the pilot extension is needed in order to ensure pricing continuity throughout the rollout of SuperMontage,[5] which will not be complete by October 31, 2002.

Beginning on October 5, 2001,[6] Nasdaq instituted a pricing pilot program that increased the per share charge for the use of SuperSoes; and introduced a rebate to providers of liquidity in SuperSoes. Nasdaq represents that the program was introduced as part of Nasdaq's ongoing efforts to align the prices charged to market participants for using SuperSoes with the costs of providing services as well as the benefits provided to market participants. As a result of this program, the per share charge for orders entered and executed in SuperSoes increased from $0.001 per share to $0.002 per share.[7] This increase was accompanied by the institution of a rebate designed to enhance market efficiency and fairness by offering incentives to market participants that provide liquidity through SuperSoes. Nasdaq represents that the rebate was also structured to address competitive disparities that existed between electronic communications networks that charge non-subscribers fees for accessing their quotes, and market makers that are generally prohibited by the SEC from charging fees.

Beginning February 1, 2002,[8] Nasdaq instituted a quotation update fee applicable to NASD members of $0.01 per quotation update. Nasdaq represents that the quotation update fee was introduced in recognition of the fact that the ability to post quotes in the Nasdaq quotation montage provides market participants with the valuable opportunity to advertise the liquidity that they offer. In addition, by not charging for quotation updates, Nasdaq was allowing its participants to quote inefficiently. Nasdaq believes that the quotation update fee discouraged the practice of posting an excessive number of quote updates that resulted in very few executed trades, while still encouraging market makers to provide liquidity through the rebate program introduced in October 2001.

2. Statutory Basis

Nasdaq believes that the proposed rule change is consistent with the provisions of section 15A of the Act,[9] in general and with sections 15A(b)(5) and 15A(b)(6) of the Act.[10] Section 15A(b)(5) requires that the rules of the NASD provide for the equitable allocation of reasonable fees, dues, and other charges among members and issuers and other persons using any facility of system which the NASD operates or controls. Section 15A(b)(6) requires rules that foster cooperation and coordination with persons engaged in facilitating transactions in securities and that are not designed to permit unfair discrimination between customers, issuers, brokers or dealers. Nasdaq believes that the proposed rule changes will ensure the fair and orderly operation of Nasdaq and the protection of investors by ensuring pricing continuity throughout the SuperMontage rollout.

B. Self-Regulatory Organization's Statement on Burden on Competition

Nasdaq believes that the proposed rule change will not result in any burden on competition that is not necessary or appropriate in furtherance of the purposes of the Act.

C. Self-Regulatory Organization's Statement on Comments on the Proposed Rule Change Received from Members, Participants or Others

Nasdaq has neither solicited nor received comments on the proposed rule change.

III. Date of Effectiveness of the Proposed Rule Change and Timing for Commission Action

The foregoing rule change has become effective pursuant to section 19(b)(3)(A) of the Act[11] and Rule 19b–4(f)(6)[12] thereunder because the proposal: (i) Does not significantly affect the protection of investors or the public interest; (ii) does not impose any significant burden on competition; and (iii) does not become operative prior to 30 days after the date of filing or such shorter time as the Commission may designate if consistent with the protection of investors and the public interest; provided that Nasdaq has given the Commission notice of its intent to file the proposed rule change, along with a brief description and text of the proposed rule change, at least five business days prior to the date of filing of the proposed rule change, or such short time as designated by the Commission. At any time within 60 days of the filing of such proposed rule change, the Commission may summarily abrogate such rule change if it appears to the Commission that such action is necessary or appropriate in the public interest, for the protection of investors or otherwise in furtherance of the purposes of the Act.

Nasdaq has requested that the Commission waive the five-day pre-filing notice requirement and the 30-day operative delay. The Commission believes that the proposed rule change is consistent with the protection of investors and the public interest and therefore believes there is good cause to waive the five-day pre-filing notice requirement and to designate the proposal as immediately operative upon filing. The Commission notes that the proposal extends a current pilot program already in place. Acceleration of the operative date will allow the pilot to operate continuously through March 31, 2003. For these reasons, the Commission finds good cause to waive the five-day pre-filing notice requirement and to designate that the proposal become operative immediately upon filing.[13]

IV. Solicitation of Comments

Interested persons are invited to submit written data, views, and arguments concerning the foregoing, including whether the proposed rule change is consistent with the Act. Persons making written submissions should file six copies thereof with the Secretary, Securities and Exchange Commission, 450 Fifth Street, NW., Washington, DC 20549–0609. Copies of the submission, all subsequent amendments, all written statements with respect to the proposed rule change that are filed with the Commission, and all written communications relating to the proposed rule change between the

[5] On January 19, 2001, the Commission issued an order to approve a proposed rule change to establish SuperMontage, Nasdaq's new proprietary system for quote display and transaction execution. See Securities Exchange Act Release No. 43863 (Jan. 19, 2001), 66 FR 8020 (Jan. 26, 2001) (SR–NASD–99–53).

[6] *See* Securities Exchange Act Release No. 44910 (Oct. 5, 2001), 66 FR 52167 (Oct. 12, 2001) (SR–NASD–2001–67).

[7] The $0.002 per share charge for non-members became effective in February 2002. *See* Securities Exchange Act Release No. 45379 (Jan. 31, 2002), 67 FR 5867 (Feb. 7, 2002) (SR–NASD–2001–64 and SR–NASD–2001–68).

[8] *See* Securities Exchange Act Release No. 45342 (Jan. 28, 2002), 67 FR 5019 (Feb. 1, 2002) (SR–NASD–2001–96).

[9] 15 U.S.C. 78o–3.

[10] 15 U.S.C. 78o–3(b)(5) and (6).

[11] 15 U.S.C. 78s(b)(3)(A).

[12] 17 CFR 240.19b–4(f)(6).

[13] For purposes only of accelerating the operative date of this proposal, the Commission has considered the proposed rule's impact on efficiency, competition, and capital formation. 15 U.S.C. 78c(f).

Commission and any person, other than those that may be withheld from the public in accordance with the provisions of 5 U.S.C. 552, will be available for inspection and copying at the Commission's Public Reference Room. Copies of such filing will also be available for inspection and copying at the principal office of Nasdaq. All submissions should refer to File No. SR–NASD–2002–150 and should be submitted by November 27, 2002.

For the Commission, by the Division of Market Regulation, pursuant to delegated authority.[14]

Margaret H. McFarland,

Deputy Secretary.

[FR Doc. 02–28133 Filed 11–5–02; 8:45 am]

BILLING CODE 8010–01–P

SECURITIES AND EXCHANGE COMMISSION

[Release No. 34–46747; File No. SR–NYSE–2002–57]

Self-Regulatory Organizations; Notice of Filing and Immediate Effectiveness of Proposed Rule Change by the New York Stock Exchange, Inc. Extending the Pilot Regarding Shareholder Approval of Stock Option Plans Through December 30, 2002, or Such Earlier Date as the NYSE's Pending Rule Proposal Requiring Shareholder Approval of Equity-Compensation Plans Is Approved by the Commission

October 30, 2002.

Pursuant to Section 19(b)(1) of the Securities Exchange Act of 1934 (''Act''),[1] and Rule 19b–4 thereunder,[2] notice is hereby given that on October 29, 2002, the New York Stock Exchange, Inc. (''NYSE'' or ''Exchange'') filed with the Securities and Exchange Commission (''SEC'' or ''Commission'') the proposed rule change as described in Items I and II below, which Items have been prepared by the Exchange. The Commission is publishing this notice to solicit comments on the proposed rule change from interested persons.

I. Self-Regulatory Organization's Statement of the Terms of Substance of the Proposed Rule Change

The Exchange proposes to extend until December 30, 2002, or such earlier date as the NYSE's pending rule proposal requiring shareholder approval of equity-compensation plans[3] is approved by the Commission, the effectiveness of the amendments to Sections 312.01, 312.03 and 312.04 of the Exchange's Listed Company Manual with respect to the definition of a ''broadly-based'' stock option plan, which were approved by the Commission on a pilot basis (the ''Pilot'') on June 4, 1999.[4] The Pilot was subsequently amended and extended on March 30, 2001 until September 30, 2001.[5] The Pilot has since been extended until January 11, 2002,[6] March 11, 2002,[7] May 13, 2002,[8] June 30, 2002,[9] August 31, 2002,[10] and October 30, 2002.[11]

II. Self-Regulatory Organization's Statement of the Purpose of, and Statutory Basis for, the Proposed Rule Change

In its filing with the Commission, the Exchange included statements concerning the purpose of and basis for the proposed rule change and discussed any comments it received on the proposed rule change. The text of these statements may be examined at the places specified in Item IV below. The Exchange has prepared summaries, set forth in Sections A, B, and C below, of the most significant aspects of such statements.

A. Self-Regulatory Organization's Statement of the Purpose of, and Statutory Basis for, the Proposed Rule Change

1. Purpose

The Exchange has had the Pilot with respect to the definition of a ''broadly-based'' stock option plan since June 4, 1999.[12] On July 13, 2000, the Exchange filed a proposed rule change seeking to extend the effectiveness of the Pilot until September 30, 2003.[13] Following receipt of comments from interested parties and the SEC staff, on January 19, 2001, the Exchange amended the 2000 Extension Request to shorten the three-year extension request to one year and to amend the definition of ''broadly based'' under the Exchange's rule. While the 2000 Extension Request was under consideration, the Commission extended the Pilot to provide the Commission and the Exchange with additional time to review and evaluate comment letters.[14] On March 30, 2001, the Commission approved the 2000 Extension Request, which amended and extended the Pilot, on a pilot basis until September 30, 2001.[15] The Exchange's 2001 Extension Request extended the Pilot until January 11, 2002 to provide additional time to evaluate the issues presented by the Pilot.[16] The Pilot was again extended several times, most recently until October 30, 2002, for the same reasons.[17]

On October 7, 2002, in connection with the Exchange's corporate governance proposals, the Exchange filed a proposal with the Commission that would require shareholder approval for equity-compensation plans, making it unnecessary to continue the Pilot. That proposal was published in the **Federal Register** on October 11, 2002.[18] As directed by the Commission staff, the Exchange is requesting an extension of the effectiveness of the Pilot until December 30, 2002, or until such earlier date as the Exchange's proposal relating to shareholder approval of equity-compensation plans is approved by the Commission.

2. Statutory Basis

The Exchange believes that the proposed rule change is consistent with Section 6(b)(5) of the Act,[19] which

---

[14] 17 CFR 200.30–3(a)(12).

[1] 15 U.S.C. 78s(b)(1).

[2] 17 CFR 240.19b–4.

[3] *See* Securities Exchange Act Release No. 46620 (October 8, 2002), 67 FR 63486 (October 11, 2002) (File No. SR–NYSE–2002–46).

[4] *See* Securities Exchange Act Release No. 41479, 64 FR 31667 (June 11, 1999) (notice of filing and order granting accelerated approval, on a pilot basis, to File No. SR–NYSE–98–32) (''Original Pilot Approval Order'').

[5] *See* Securities Exchange Act Release No. 44141, 66 FR 18334 (April 6, 2001) (order granting approval, on a pilot basis, to the File No. SR–NYSE–00–32).

[6] *See* Securities Exchange Act Release No. 44886 (September 28, 2001), 66 FR 51083 (October 5, 2001) (notice of filing and immediate effectiveness of File No. SR–NYSE–2001–37) (''2001 Extension Request'').

[7] *See* Securities Exchange Act Release No. 45275 (January 14, 2002), 67 FR 2718 (January 18, 2002) (File No. SR–NYSE–2002–03).

[8] *See* Securities Exchange Act Release No. 45546 (March 12, 2002), 67 FR 10272 (March 18, 2002) (File No. SR–NYSE–2002–14).

[9] *See* Securities Exchange Act Release No. 45918 (May 13, 2002), 67 FR 35174 (May 17, 2002) (File No. SR–NYSE–2002–18).

[10] *See* Securities Exchange Act Release No. 46143 (June 28, 2002), 67 FR 35174 (July 5, 2002) (File No. SR–NYSE–2002–22).

[11] *See* Securities Exchange Act Release No. 46437 (August 29, 2002), 67 FR 57262 (September 9, 2002) (File No. SR–NYSE–2002–42).

[12] *See* Original Pilot Approval Order note 4 *supra.*

[13] *See* Securities Exchange Act Release No. 43111 (August 2, 2000), 65 FR 49046 (August 10, 2000) (notice of filing of File No. SR–NYSE–00–32) (''2000 Extension Request'').

[14] *See* Securities Exchange Act Release Nos. 43329 (September 22, 2000), 65 FR 58833 (October 2, 2000) (notice of filing and immediate effectiveness of File No. SR–NYSE–00–38); 43647 (November 30, 2000), 65 FR 77407 (December 11, 2000) (notice of filing and immediate effectiveness of File No. SR–NYSE–00–52); and 44018 (February 28, 2001), 66 FR 13821 (March 7, 2001) (notice of filing and immediate effectiveness of File No. SR–NYSE–2001–04).

[15] *See* note 5 *supra.*

[16] *See* note 6 *supra.*

[17] *See* notes 7 through 11 *supra.*

[18] *See* note 3 *supra.*

[19] 15 U.S.C. 78f(b)(5).

requires, among other things, that an Exchange have rules designed to prevent fraudulent and manipulative acts and practices, to promote just and equitable principles of trade, to foster cooperation and coordination with persons engaged in facilitating transactions in securities, to remove impediments to and perfect the mechanism of a free and open market and a national market system and, in general, to protect investors and the public interest.

B. Self-Regulatory Organization's Statement on Burden on Competition

The Exchange does not believe that the proposed rule change will impose any burden on competition that is not necessary or appropriate in furtherance of the purposes of the Act.

C. Self-Regulatory Organization's Statement on Comments on the Proposed Rule Change Received From Members, Participants or Others

The Exchange has neither solicited nor received written comments on the proposed rule change.

III. Date of Effectiveness of the Proposed Rule Change and Timing for Commission Action

Because the proposed rule change: (1) Does not significantly affect the protection of investors or the public interest; (2) does not impose any significant burden on competition; and (3) does not become operative for 30 days from the date of filing, or such shorter time as the Commission may designate if consistent with the protection of investors and the public interest, the proposed rule change has become effective pursuant to Section 19(b)(3)(A) of the Act [20] and Rule 19b–4(f)(6) [21] thereunder.

A proposed rule change filed under Rule 19b–4(f)(6) [22] normally does not become operative prior to 30 days after the date of filing. However, pursuant to Rule 19b–4(f)(6)(iii),[23] the Commission may designate a shorter time if such action is consistent with the protection of investors and public interest. The Exchange seeks to have the proposed rule change become operative on or before October 30, 2002, in order to allow the Pilot to continue in effect on an uninterrupted basis. In addition, under Rule 19b–4(f)(6)(iii), the Exchange is required to provide the Commission with written notice of its intent to file the proposed rule change at least five business days prior to the filing date or such shorter time as designated by the Commission. The Commission has waived the five-day pre-notice requirement for this proposed rule change. In addition, for the reasons discussed below, the Commission has also waived the thirty-day operative date requirement for this proposed rule change.

The Commission, consistent with the protection of investors and the public interest, has determined to make the proposed rule change, which will extend the Pilot through December 30, 2002, or such earlier date as the NYSE's pending rule proposal requiring shareholder approval of equity-compensation plans [24] is approved by the Commission, become operative on October 30, 2002. The Commission notes that unless the Pilot is extended, the Pilot will expire and the provisions of Sections 312.01, 312.03, and 312.04 of the Exchange's Listed Company Manual that were amended in the Pilot will revert to those in effect prior to June 4, 1999. The Commission believes that such a result could lead to confusion.

The Commission recognizes that the Pilot has generated many comment letters from commenters that do not support the NYSE's definition of ''broadly-based'' stock option plans under the Pilot.[25] The Commission also notes that many commenters were critical of the NYSE's existing rules on broadly-based plans prior to the adoption of the original Pilot. As noted above, if the Pilot is not extended, the rules prior to the Pilot will go into effect. The proposed rule change merely extends the duration of the Pilot for only a short period of time and does not deal with the substantive issues presented by the Pilot itself.

The Commission notes that once the Exchange's proposed rule change relating to shareholder approval of equity compensation plans has been approved by the Commission, those approved rules will supersede this Pilot because the concept of ''broadly-based'' stock option plans will no longer be retained in the Exchange's shareholder approval rules.

Based on these reasons, the Commission has determined that it is consistent with the protection of investors and the public interest that the proposed rule change, which will extend the Pilot through December 30, 2002, or such earlier date as the NYSE's pending rule proposal requiring shareholder approval of equity-compensation plans is approved by the Commission, become operative on October 30, 2002.[26] At any time within 60 days of the filing of the proposed rule change, the Commission may summarily abrogate such rule change if it appears to the Commission that such action is necessary or appropriate in the public interest, for the protection of investors, or otherwise in furtherance of the purposes of the Act.

IV. Solicitation of Comments

Interested persons are invited to submit written data, views and arguments concerning the foregoing, including whether the proposed rule change is consistent with the Act. Persons making written submissions should file six copies thereof with the Secretary, Securities and Exchange Commission, 450 Fifth Street, NW., Washington, DC 20549–0609. Copies of the submission, all subsequent amendments, all written statements with respect to the proposed rule change that are filed with the Commission, and all written communications relating to the proposed rule change between the Commission and any person, other than those that may be withheld from the public in accordance with the provisions of 5 U.S.C. 552, will be available for inspection and copying in the Commission's Public Reference Room. Copies of such filing will also be available for inspection and copying at the principal office of the above-mentioned self-regulatory organization. All submissions should refer to the File No. SR–NYSE–2002–57 and should be submitted by November 27, 2002.

For the Commission, by the Division of Market Regulation, pursuant to delegated authority.[27]

Margaret H. McFarland,

Deputy Secretary.

[FR Doc. 02–28131 Filed 11–5–02; 8:45 am]

BILLING CODE 8010–01–P

[20] 15 U.S.C. 78s(b)(3)(A).

[21] 17 CFR 240.19b–4(f)(6).

[22] *Id.*

[23] 17 CFR 240.19b–4(f)(6)(iii).

[24] *See* note 3 *supra.*

[25] *See* Original Pilot Approval Order, note 4 *supra.*

[26] For purposes only of accelerating the operative date of this proposal, the Commission notes that it has considered the proposed rule's impact on efficiency, competition, and capital formation. 15 U.S.C. 78c(f).

[27] 17 CFR 200.30–3(a)(12).

DEPARTMENT OF STATE

[Public Notice 4158]

United States International Telecommunication Advisory Committee; Preparations for Various Telecommunication Standardization Meetings: Notice of Meetings

The Department of State announces meetings of the U.S. International Telecommunication Advisory Committee (ITAC). The purpose of the Committee is to advise the Department on policy, technical and operational issues with respect to international telecommunications standardization bodies such as the International Telecommunication Union.

The ITAC will meet to debrief the ITU Plenipotentiary Meeting recently completed in Marrakech, Morocco on November 20, 2002 from 9:30–noon at the Department of State in a room to be announced.

Members of the public will be admitted to the extent that seating is available, and may join in the discussions, subject to the instructions of the Chair. Entrance to the Department of State is controlled; people intending to attend a meeting at the Department of State should send their clearance data by fax to (202) 647–7407 or e-mail to *worsleydm@state.gov* not later than 24 hours before the meeting. Please include the name of the meeting, your name, social security number, date of birth and organizational affiliation. One of the following valid photo identifications will be required for admittance: U.S. driver's license with your picture on it, U.S. passport, or U.S. Government identification. Directions to the meeting location may be obtained by calling the ITAC Secretariat at (202) 647–2592 or e-mail to *worsleydm@state.gov.*

Dated: October 25, 2002.

Marian Gordon,

Director, Telecommunication Development, Department of State.

[FR Doc. 02–28218 Filed 11–5–02; 8:45 am]

BILLING CODE 4710–45–P

DEPARTMENT OF STATE

[Public Notice 4179]

Advisory Committee Meeting on Law Applicable to Securities Intermediaries Meeting Notice

The State Department's Advisory Committee on Private International Law Study Group on International Securities Transactions will hold two meetings at the Federal Reserve Bank of New York on proposed treaty rules on determining the law applicable to securities intermediaries for cross-border arrangements, and in particular the law applicable to dispositions of securities held through an indirect holding system. The meeting will provide an opportunity for comment on current proposals for such rules, on which final agreement will be sought in December 2002.

A preliminary meeting will be held on Tuesday, October 29 from 10 a.m. until 4 p.m., and a final meeting on Wednesday, November 20 to review positions of the securities industry, agency authorities, and state and federal securities law and other related interests.

Finalization of the proposed rules, to be set out in multilateral treaty form, will be sought under the auspices of the Hague Conference on Private International Law, located at The Hague, Netherlands, an international private law body of which the United States is a member. Finalization of the proposed treaty rules does not in any manner commit the United States or any participant to implement the rules, and a review of the rules as adopted and full opportunity for comment will be initiated during the first quarter 2003.

Agenda: The meeting will review the latest draft rules which have been considered by a number of countries, organizations and industry representatives since work on this topic was initated in January 2001, together with proposed amendments thereto. Recommendations will also be sought on further amendments and provisions that may be suggested.

Subject to availability of time, the meeting will review developments involving direct and indirect holders of securities, transfers of interest, dematerialization and immobilization of securities, the systemic role of multiple indirect holding systems, and the balance of interests to be achieved through harmonization at the international level by treaty. Among other issues, an applicable law regime will need to address what law governs transfers of securities held through custodial accounts and financial intermediaries. Important in that regard will be the interface with existing state and federal law in the United States.

Time permitting, the desirability of new efforts to prepare substantive rules on securities intermediaries by other international bodies which could build on progress achieved at the Hague Conference will be discussed, including in particular UNIDROIT and the Organization of American States (OAS).

Documentation: The conference working documents are available at *http://www.hcch.net,* including the most recent draft provisions, in particular Preliminary Doc. Nos. 15 and 16, and the initial basic study by the Permanent Bureau of the Hague Conference, ''Law applicable to disposition of securities held through indirect holding systems'', Prel. Doc. No. 1.

Attendance: The public is invited to attend up to the capacity of the meeting room and may participate subject to the rulings of the chair. The meetings will take place at 10 a.m. to 4 p.m. at the New York Federal Reserve Bank, 33 Liberty Street, NYC. Since access to the building is controlled, persons wishing to attend should, not later than three (3) days prior to each meeting, notify Audrey Watson at 212–720–8403, fax 720–1756 of their participation, along with address, contact numbers and affiliation. For futher information on the proposed rules or the Hague Conference, please contact Joyce Hansen, Sr. Vice President, New York Federal Reserve, at 212–720–5024, fax 212–720–1756 or Harold Burman, Office of the Legal Adviser, State Department, 202–776–8421; fax 202–776–8482.

Dated: October 23, 2002.

Harold S. Burman,

Executive Director, Secretary of State's Advisory Committee on Private International Law, Department of State.

[FR Doc. 02–28219 Filed 11–5–02; 8:45 am]

BILLING CODE 4710–08–P

DEPARTMENT OF TRANSPORTATION

Federal Transit Administration

Preparation of an Environmental Impact Statement on the Expansion of Metropolitan Atlanta Rapid Transit Authority Transit Service From Hamilton E. Holmes Station in the City of Atlanta, Georgia to Fulton Industrial Boulevard in Fulton County, GA

AGENCY: Federal Transit Administration (FTA), Department of Transportation (DOT).

ACTION: Notice of intent to prepare an environmental impact statement.

SUMMARY: The Federal Transit Administration (FTA), in cooperation with the Metropolitan Atlanta Rapid Transit (MARTA), is issuing this notice to advise interested agencies and the public that, in accordance with National Environmental Policy Act (NEPA), an Environmental Impact Statement (EIS) will be prepared for an expansion of transit services westward from MARTA's Hamilton E. Holmes Station on its West Line to a logical terminus on Fulton Industrial Boulevard. Identified

by MARTA's Board of Directors as the top priority for expansion of services, possible rail extensions and other types of transit service are outlined in MARTA's ''Three Corridor Feasibility Study'' (August 2000). As a part of an Alternatives Analysis and the ensuing EIS, the benefits and impacts of eighteen individual alternatives, including a no-build or no-action alternative, a transportation system management (TSM) alternative (also called New Starts Baseline alternative) and several build alternatives, will be examined. Scoping will be accomplished through coordination with interested persons, organizations, and federal, state and local agencies. FTA is serving as the federal lead agency for the project in anticipation of a grant application from MARTA for its construction through the Federal Section 5309 New Starts Program. Based on the results of the scoping process, FTA will establish the scope of the environmental review under NEPA, including the identification of environmental issues and effects to be addressed and reasonable alternatives to be retained for detailed evaluation. If a need to expand the study area west into Cobb and Douglas County can be demonstrated during the scoping process and if a project sponsor other than MARTA can be identified for that portion of the project, this NEPA undertaking will be accordingly augmented.

DATES: Interagency and public scoping and information meetings will be held on the following dates at the locations indicated:

- *Interagency Scoping Meeting:* Wednesday, November 13, 2002 from 10 AM to 12 Noon, at the URS Corporation Offices at 235 Peachtree St., NE, Suite 2000—North Tower, Atlanta, Georgia 30324.
- *Public Scoping Meetings:*

—Tuesday, November 19, 2002 from 6 pm to 8:30 pm, at the Peyton Forest Elementary School Gymnasium, 301 Peyton Road, SW, Atlanta Georgia 30311.

—Thursday, November 21, 2002 from 11:30 am to 2 pm, at the Comfort Inn, Meeting Room, 4330 Fulton Industrial Boulevard, SW, Atlanta, GA 30336.

—Thursday, November 21, 2002 from 6 am to 8:30 pm, at the Peyton Forest Elementary School Gymnasium, 301 Peyton Road, SW, Atlanta Georgia 30311.

—*Written Comments:* on the scope of the environmental study are welcome and should be sent by December 20, 2002 to Connie Cannon, Project Manager, MARTA, 2424 Piedmont Street, Atlanta, Georgia 30324. Comments can also be emailed to *westline.comments@itsmarta.com.*

ADDRESSES: The addresses where scoping meetings will be held and where comments on the scope of study may be sent appear above in the *DATES* Section. A scoping booklet is available from Connie Cannon, Project Manager, MARTA, 2424 Piedmont Street NE, Atlanta, Georgia 30324 or by accessing the project Web site at *www.itsmarta.com.*

FOR FURTHER INFORMATION CONTACT: Tony Dittmeier, Transportation Program Specialist, Federal Transit Administration, Region IV Office, telephone 404.562.3512 or Connie Cannon, MARTA, 2424 Piedmont Street NE, Atlanta, Georgia 30324.

SUPPLEMENTARY INFORMATION:

I. Scoping

MARTA will hold interagency and public scoping meetings as presented in the **DATES** section above. At these meetings, MARTA will present preliminary results of an Alternatives Analysis and the alternatives proposed for detailed evaluation in the EIS. At the public meetings, interested persons will have an opportunity to speak individually with a MARTA representative. In addition, representatives will be available to receive written and record verbal comments on the scope of the NEPA review. All scoping meeting locations are accessible to persons with disabilities. Individuals who require special accommodations, such as a sign language interpreter, to participate in the meeting should contact Ms. Rosalyn V. Green, ADA Compliance Officer, MARTA, 2424 Piedmont Rd. NE, Atlanta, Georgia 30324 or by telephone at (404) 848–4800, TDD at (404) 848–5665 or TTY (404) 848–4931. Interested individuals, organizations, and public agencies are invited to attend the scoping meetings and participate in identifying any important environmental impact issues related to the proposed alternatives and suggesting alternatives which would be more economical or would have less environmental impact while achieving similar transportation objectives. An information packet, referred to as the Scoping Booklet, will be distributed to all public agencies and interested individuals and will be available at the meetings. Others may request the Scoping Booklet by contacting Brian Piascik at the address listed above in **ADDRESSES.** Anyone wishing to be placed on the project mailing list to receive meeting notices and further information as the project develops should also contact Connie Cannon at the address listed in **ADDRESSES** or call the project information line (404) 589–0929. Comments during the scoping period should focus on identifying the social, economic, and environmental concerns associated with the proposed action, and alternatives that deserve consideration, and not on a preference for a particular alternative. Comments regarding preference for a particular alternative may be submitted during subsequent public meetings or at a hearing on the Draft Environmental Impact Statement, when it is published. Scoping comments may be made at the scoping meetings or may be directed in writing to Connie Cannon, Project Manager, at the address given in **ADDRESSES.**

II. Description of the Project Area and Transportation Need

MARTA has identified an expansion of the West Line Transit Service as a top priority for meeting the travel needs within the Atlanta area. MARTA's long-range planning efforts identified resources to begin the required planning, environmental and design activities. MARTA has recently conducted preliminary activities to develop an aggressive, yet realistic plan for completing the required activities leading to the project's implementation. The current project, as included in the Atlanta Regional Commission's (ARC) Regional Transportation Plan (RTP), includes transit services beyond the MARTA West Line from the Hamilton E. Holmes Station to Fulton Industrial Boulevard. A new station is proposed near I–20 at Fulton Industrial Boulevard and a potential second station may be considered in the vicinity of Martin Luther King, Jr. Drive and Fairburn Road. MARTA has previously completed preliminary studies on the project.

In MARTA's previous work, several alignment options, technologies and station locations were identified and will be the subject of continued study. The West Line corridor parallels I–20, which is an identified congested facility in ARC's Congestion Management System (CMS). The CMS identifies I–20 as congested from I–285 to SR 5, serving approximately 140,000 vehicles per day. The primary congestion occurs eastbound during the morning peak period and westbound during the afternoon peak period.

MARTA's Three Corridors Feasibility Study demonstrated substantial mobility benefits of the proposed West Line extension. This previous evaluation demonstrated significant new transit trips as a result of the build

alternative. Trips from outside the I–285 perimeter destined to Atlanta would be particularly well served by the project. The travel forecasts predicted over 13,800 daily transit boardings at the proposed Fulton Industrial station. ARC's Regional Transportation Plan, 2025 (RTP) also documents the existing and future travel patterns and levels of congestion within the corridor. The RTP lists planned transportation improvements including widening and addition of HOV lanes on I–20 and numerous surface street improvements. Even with those improvements, the RTP sites the expected continued increase in levels of congestion. The RTP also forecasts that substantial ridership can be attributed to extended transit service beyond the existing West Line terminus at Hamilton E. Holmes Station.

The Fulton Industrial Boulevard area is also developing into a major employment center for many MARTA service area residents, which requires a commute from the central area of Atlanta, South Fulton County and DeKalb County. A reduction in travel time to the Fulton Industrial Area could encourage a substantial increase in reverse commutes on the MARTA System.

III. Alternatives To Be Studied

An Alternatives Analysis will identify the transit service options for reconsideration, in detail, during the NEPA process. The alternatives expected to be considered in detail in the EIS include:

A no-build or no-action alternative that includes only those projects already committed as defined in the current Regional Long Range Transportation Plan.

A TSM Alternative that represents low cost infrastructure improvements and bus transit enhancements to the service already provided in the study area, including projects already committed as defined in the current Regional Long Range Transportation Plan.

A number of fixed guideway improvements along multiple alignments including, but not limited to, a heavy rail extension of the current MARTA West Line, bus rapid transit and light rail transit facilities. These alternatives would also include all facilities associated with the construction and operation of transit systems including right of way, structures, track (if necessary), stations, park and ride lots, storage and maintenance facilities and respective bus and rail operating plans.

IV. Probable Effects

The EIS will be prepared in accordance with NEPA and its implementing regulations (40 CFR parts 1500–1508), and the FTA regulation on environmental procedures shared with the Federal Highway Administration (23 CFR part 771). The EIS will evaluate the social (including environmental justice benefits and burdens analysis), economic, and environmental impacts of the alternatives. Primary concerns to be addressed include: safety at grade crossings, site contamination in railroad rights-of-way, property effects including business disruptions and relocation, impacts on local traffic and travel patterns, noise and vibration impacts, land use impacts, wetland impacts, and aesthetic/visual impacts. The cumulative impacts of the project together with other reasonably foreseeable actions and activities will be addressed.

V. FTA New Starts Procedures

Following public review of the Draft EIS, MARTA will request FTA approval to initiate Preliminary Engineering, in accordance with the FTA New Starts regulation (49 CFR part 611). FTA will consider the merits of the project in comparison with other projects across the nation competing for New Starts funding. FTA will either recommend or not recommend the preferred alternative's advancement into Preliminary Engineering.

Issued on: October 31, 2002.

Jerry Franklin,

Regional Administrator, Atlanta, Georgia.

[FR Doc. 02–28244 Filed 11–5–02; 8:45 am]

BILLING CODE 4910–57–P

DEPARTMENT OF TRANSPORTATION

Federal Transit Administration

Environmental Impact Statement for the Salt Lake City—Weber County Regional Transportation Corridor Project

AGENCY: Federal Transit Administration (FTA), Department of Transportation (DOT).

ACTION: Notice of intent to prepare an environmental impact statement.

SUMMARY: The Federal Transit Administration (FTA), in cooperation with the Utah Transit Authority (UTA), is issuing this notice to advise interested agencies and the public that, in accordance with the National Environmental Policy Act (NEPA), an Environmental Impact Statement (EIS) will be prepared for the proposed Salt Lake City—Weber County Regional Transportation Corridor project located in Weber, Davis, and Salt Lake Counties, Utah. An Environmental Impact Statement will be prepared to evaluate transportation improvements, including a potential commuter rail line, in the Salt Lake City-Weber County Regional Transportation Corridor.

A commuter rail transit alternative (*i.e.*, the Build Alternative), a No-Build Alternative, and any additional alternatives emerging from the Scoping Process will be evaluated. The EIS will consider any reasonable alternatives identified during scoping that provide similar transportation benefits while reducing or avoiding adverse impacts. Scoping will be accomplished through coordination with interested persons, organizations, and federal, state and local agencies. Three (3) public scoping meetings, one meeting in each of the three counties, and one (1) interagency scoping meeting are currently planned.

Based on the results of the Scoping Process, FTA will make the following determinations regarding the environmental review under NEPA:

1. Identification of environmental issues to be addressed;

2. Refinement of the alternatives for evaluation.

DATES: Public and agency scoping meetings will be held November 15 to 22, 2002.

Agency Scoping Meeting: November 15, 2002.

Public Scoping Meeting: November 19, 2002.

Public Scoping Meeting: November 20, 2002.

Public Scoping Meeting: November 21, 2002.

ADDRESSES: Written comments on the project should be sent to Michelle Rust, Strategic Planner, Utah Transit Authority, 3600 South 700 West, Salt Lake City, Utah 84130 (801) 262–5626, ext. 3255.

FOR FURTHER INFORMATION, CONTACT: Don Cover, Federal Transit Administration, 216–16th Street, Suite 650, Denver, Colorado 80202. Phone: (303)844–2174.

SUPPLEMENTARY INFORMATION:

I. Scoping

UTA will hold the Interagency Scoping meeting November 15, 2002 from 8:30 A.M to 10:30 A.M. at UTA's Meadowbrook Offices, in the Board Room, located at 3600 South 700 West, Salt Lake City, UT 84130. This location is accessible to individuals with disabilities. Individuals with special needs should contact Sherry L. Repscher, ADA Compliance Officer,

UTA, 3600 South 700 West, Salt Lake City, Utah 84130 (801)-262–5626.

UTA will hold the following Public Scoping Meetings:

1. November 19, 2002 from 4 p.m. to 7 p.m. at the Davis County Library-North Branch located at 562 South 1000 East, Clearfield, UT 84015. This location is accessible to individuals with disabilities. Individuals with special needs should contact Sherry L. Repscher, ADA Compliance Officer, UTA, 3600 South 700 West, Salt Lake City, Utah 84130 (801)–262–5626.

2. November 20, 2002 from 4 p.m. to 7 p.m. at the Union Pacific Depot at the Gateway, located at 450 West 100 South, Salt Lake City, Utah 84101. The meeting location is service by the UTA TRAX Delta Center Station and is accessible to individuals with disabilities.

3. November 21, 2002 from 4 p.m. to 7 p.m. at the Ogden Union Station located at 2501 Wall Avenue, Ogden, Utah 84401. This location is also accessible to individuals with disabilities.

Interested individuals, organizations, and public agencies are invited to attend the Scoping Meetings. The purpose of the Scoping Meetings is: (1) To determine the scope of the NEPA evaluation including the identification of significant environmental or community issues and alternatives that would reduce or eliminate adverse impacts; and (2) to eliminate issues which are not significant or which have already been evaluated by the prior environmental review, the Inter-Regional Corridor Alternatives Analysis. An information packet, referred to as the Scoping Booklet, will be distributed to all public agencies and interested individuals and will be available at the meetings. Others may request the Scoping Booklet by contacting Michelle Rust of UTA at the address listed above in **ADDRESSES**.

If you wish to be placed on the mailing list to receive further information as the project develops, contact: Michelle Rust, Strategic Planner, Utah Transit Authority, 3600 South 700 West, Salt Lake City, Utah 84130 (801) 262–5626, ext. 3255.

II. Description of the Study Area and Project Need

The Weber County to Salt Lake City project corridor is centered on an existing rail corridor through Weber, Davis, and Salt Lake Counties. During the preparation of the Draft Environmental Impact Statement (EIS) UTA plans to submit an initial section 5309 New Starts evaluation to FTA in accordance with 49 CFR part 611, and request FTA approval to initiate Preliminary Engineering for the proposed commuter rail line. The Final EIS will reflect the results of Preliminary Engineering.

Recent passage of a ¼ cent regional sales tax increase indicates broad public support for expansion and improvement of transit services throughout Weber, Salt Lake, and Davis Counties. The project has undergone more than five years of planning and alternatives analysis conducted by the two Metropolitan Planning Organizations, Wasatch Front Regional Council (WFRC) and Mountainland Association of Governments (MAG), in association with UDOT and UTA. It has been included in the financially constrained Long-Range Transportation Plan most recently adopted by WFRC, in September 2001.

III. Alternatives

The Utah Transit Authority, the Wasatch Front Regional Council, the Mountainlands Association of Governments, and the Utah Department of Transportation conducted an alternatives analysis entitled the Inter-Regional Corridor Alternatives Analysis which looked at transit alternatives in a corridor from Brigham City to Payson in Utah. The alternatives considered included commuter rail, light rail and express bus. While the corridor covered by the Inter-Regional Corridor Alternatives Analysis was longer than the project proposed, the Study did completely encompass the Salt Lake City to Weber County corridor now being studied and recommended that the Commuter Rail Alternative be pursued. The Inter-Regional Corridor Alternatives Analysis (IRCAA) concluded that light rail and bus alternatives should be eliminated from further consideration. The analysis of the IRCAA will be incorporated into the EIS. During Scoping, that document is available for public review by contacting Michelle Rust of UTA at the address and phone number given above in **ADDRESSES**.

UTA and FTA are planning to evaluate the following two alternatives (and any others that emerge as the result of scoping) in the EIS:

- *No Build Alternative:* This alternative assumes that there will be no change in transportation services or facilities in the corridor beyond already committed projects. It includes the highway and transit improvements defined in the two MPOs' financially constrained Long-Range Transportation Plans but with the proposed commuter rail project removed and replaced by bus service comparable to the bus service levels in other similar parts of the metropolitan area. It includes the recently completed Intermodal Center in Ogden and the Intermodal Center in Salt Lake City, which is under development.
- *Build Alternative:* The Build Alternative consists of new commuter rail service from northern Weber County, through the recently completed Intermodal Center in Ogden to the Intermodal Center in Salt Lake City, which is under development. Intermediate stops are planned along the route. Ridership and costs have been estimated with the assumption that peak period and off-peak service would be provided in both directions along the line, even though the majority of the line will have single track. The distance between Ogden and Salt Lake City is approximately 37 miles.

IV. Probable Effects/Potential Impacts for Analysis

Among the primary transit issues to be evaluated are the effects on transit ridership and mobility for the corridor's transit dependent residents, the role of the project in a regional transit network that supports the region's air quality goals, capital outlays needed to construct the project, cost of operating and maintaining the facilities created by the project, and the financial impacts on the funding agencies.

In accordance with NEPA, the impacts on potentially affected environmental and social resources will be considered, including land use and neighborhood impacts, residential and business displacements and relocations, traffic and parking impacts near stations, traffic circulation, visual impacts, impacts on cultural and archaeological resources, and noise and vibration impacts. Impacts on air and water quality, groundwater, hazardous waste sites, and water resources will also be examined. The impacts will be evaluated both for the construction period and for the long-term period of operation to include direct, indirect, and cumulative analysis. Measures to mitigate adverse impacts will be considered.

V. FTA Procedures

The EIS will be prepared in accordance with NEPA and its implementing regulations including those of the Council on Environmental Quality (CEQ) implementing NEPA (40 CFR parts 1500–1508), and the FTA regulation on environmental procedures shared with the Federal Highway Administration (23 CFR part 771). The NEPA process will also be used to comply with the requirements of the Clean Air Act Amendments of 1990 (CAAA) and with Executive Order

12898 on Environmental Justice. After publication, the draft NEPA document will be available for comment by the public and other agencies. The final NEPA review will consider the public and agency comments received during the public circulation of the draft EIS, will refine the project as appropriate in response to the comments, will continue with Preliminary Engineering of the Project, and will develop the preferred alternative, including committed mitigation measures. Opportunity for additional public comment will be provided throughout all phases of the project development, and will be announced through the mailing list, on the project website, or by other means.

Issued on: October 30, 2002.

Lee O. Waddleton,

Regional Administrator, Federal Transit Administration.

[FR Doc. 02–28245 Filed 11–5–02; 8:45 am]

BILLING CODE 4910–57–P

DEPARTMENT OF TRANSPORTATION

National Highway Traffic Safety Administration

[Docket No. NHTSA–2001–10526; Notice 2]

Decision That Nonconforming 1999 Ferrari F355 Passenger Cars Are Eligible for Importation

AGENCY: National Highway Traffic Safety Administration (NHTSA), DOT.

ACTION: Notice of decision by NHTSA that nonconforming 1999 Ferrari F355 passenger cars are eligible for importation.

SUMMARY: This document announces the decision by NHTSA that 1999 Ferrari F355 passenger cars not originally manufactured to comply with all applicable Federal motor vehicle safety standards are eligible for importation into the United States because they are substantially similar to vehicles originally manufactured for importation into and sale in the United States and certified by their manufacturer as complying with the safety standards (the U.S. certified version of the 1999 Ferrari F355), and they are capable of being readily altered to conform to the standards.

DATES: This decision is effective as of the date of its publication in the **Federal Register**.

FOR FURTHER INFORMATION CONTACT: Luke Loy, Office of Vehicle Safety Compliance, NHTSA (202–366–5308).

SUPPLEMENTARY INFORMATION:

Background

Under 49 U.S.C. 30141(a)(1)(A), a motor vehicle that was not originally manufactured to conform to all applicable Federal motor vehicle safety standards (''FMVSS'') shall be refused admission into the United States unless NHTSA has decided that the motor vehicle is substantially similar to a motor vehicle originally manufactured for importation into and sale in the United States, certified under 49 U.S.C. 30115, and of the same model year as the model of the motor vehicle to be compared, and is capable of being readily altered to conform to all applicable FMVSS.

Petitions for eligibility decisions may be submitted by either manufacturers or importers who have registered with NHTSA pursuant to 49 CFR part 592. As specified in 49 CFR 593.7, NHTSA publishes notice in the **Federal Register** of each petition that it receives, and affords interested persons an opportunity to comment on the petition. At the close of the comment period, NHTSA decides, on the basis of the petition and any comments that it has received, whether the vehicle is eligible for importation. The agency then publishes this decision in the **Federal Register**.

J.K. Technologies, LLC, of Baltimore, MD, (''J.K.'') (Registered Importer 90–006) petitioned NHTSA to decide whether 1999 Ferrari F355 passenger cars are eligible for importation into the United States. NHTSA published notice of the petition on September 24, 2001 (66 FR 48905) to afford an opportunity for public comment. The reader is referred to that notice for a thorough description of the petition.

Three comments were received in response to the notice of the petition. Only one of these, from Ferrari North America (FNA), the U.S. representative of the vehicle's manufacturer, provided substantive technical information relating to the petition. The other comments were in favor of granting the petition, with one party identifying a recall that would need to be addressed. The FNA comments and subsequent responses from J.K. and FNA with respect to each FMVSS that the comments addressed are discussed below.

Standard Nos. 208—Occupant Crash Protection, and 209—Seat Belt Assemblies

On October 24, 2001, FNA stated that J.K. failed to note differences between the U.S.-certified 1999 Ferrari F355 and non-U.S. certified versions of the vehicle with respect to 12 parts directly relating to Standard No. 208 and/or Standard No. 209. FNA stated that the seat belts in the U.S. version are different from those in the non-U.S. version with respect to labeling and the child seat ratchet mechanism. On April 11, 2002, J.K. stated that all modified vehicles will have the U.S. parts for all seat belt components and thus will comply with Standard Nos. 208 and 209. On May 6, 2002, FNA stated that NHTSA should condition the importation of non-U.S. certified 1999 Ferrari F355 passenger cars on a requirement that registered importers (RIs) replace any non-U.S. model parts related to Standard Nos. 208 and 209 with U.S. model parts. On June 3, 2002, J.K. agreed and reiterated that all components would be inspected for U.S. part numbers and, where necessary, U.S. parts will be installed.

Standard No. 214—Side Impact Protection

On October 24, 2001, FNA stated that only U.S. and Canadian versions of the 1999 Ferrari F355 were equipped with specially designed door beams that are needed to meet this standard. FNA stated that there was no practical method of installing door beams on the outside of the door frame, as was done on the U.S. certified version of the vehicle, without major disassembly of the door. FNA also stated that the door beam material was not available from FNA, as J.K. had claimed in the petition. FNA contended that the only way to achieve compliance with Standard No. 214 was to completely replace both the driver and passenger doors.

On April 11, 2002, J.K. responded that there are two ways to bring the non-U.S. certified 1999 Ferrari F355 into compliance with this standard: one method is to replace the non-U.S. model doors with U.S. model doors, as suggested by FNA; and the second method is to modify the non-U.S. model doors by installation of a door beam. [1] J.K. stated that beam stock that is identical to the door beam stock that Ferrari installs in the U.S. door is available from Ferrari's supplier. J.K. stated that the door beams can be installed from inside the door and mounted on the stock mounts, and asserted that the finished product would have door beam installations that are

[1] We note that for purposes of determining eligibility for importation, replacement of a door is a simple modification that clearly would meet the criteria of 49 U.S.C. 30141(a)(1)(A)(iv). However, J.K. stated that it would prefer to modify the vehicle by installing an additional door beam, since that would be far less expensive.

identical to those on the U.S. certified version of the vehicle.

On May 6, 2002, FNA stated that J.K. had not provided any basis to support its claim that the installation of a side impact door beam in a non-U.S. certified 1999 Ferrari F355 would allow the vehicle to meet the requirements of Standard No. 214. FNA reiterated its view that any door lacking an original equipment door beam would have to be replaced with an entire new U.S. model door.

On June 3, 2002, J.K. advised NHTSA that it would conduct a static Standard No. 214 test of its door beam installation and supply the test results to the Office of Vehicle Safety Compliance (OVSC). Subsequently, J.K. provided OVSC with the test report regarding a test conducted at the MGA test laboratory. The test report indicates that the door met the requirements of the standard, with a compliance margin of 17–21%. However, the MGA test did not actually test the strength of the door as mounted on a vehicle, since the door was mounted on a rigid (non-movable) fixture. The rigid fixture did not simulate the bending that would be associated with the door front hinge-to-A pillar and the rear door latch-to-B pillar connections during the application of test forces.

The agency has reviewed the test report prepared by MGA. In our view, because the boundary conditions used in the MGA test were too restrictive and added additional resistive force, a passing result in that test does not necessarily demonstrate that a vehicle equipped with a door constructed in the same manner as the one tested will be in conformance with the static test requirements of Standard No. 214. We note that a more convincing simulation would utilize boundary conditions that allow translation and rotation in the same way door hinges do to account for the vehicle body deformation. Nevertheless, given the margin of compliance in the MGA test, we cannot say that a vehicle modified in this way would not comply with the standard.

After considering all the circumstances, we have concluded that the 1999 non-U.S. certified Ferrari F355 is capable of being readily altered to comply with the static test requirements of the standard. We note, however, that J.K. did not provide a test demonstrating compliance of a vehicle equipped with the modified door with the dynamic crash test requirements of Standard No. 214. While it is likely that the non-U.S. certified version would meet these dynamic test requirements (and FNA has not contended otherwise), modification of the door could conceivably have an adverse effect, particularly if padding originally installed in the vehicle door is removed. Therefore, the agency will require any RI modifying a 1999 Ferrari F355 to reinstall any padding or other material taken out of the door during the installation of a door beam.

Standard No. 301—Fuel System Integrity

On October 24, 2001, FNA stated that, contrary to assertions in the petition, the rollover valve and the check valve are not the only safety-related components of the fuel system on the non-U.S. certified 1999 Ferrari F355 relevant to compliance with Standard No. 301. On April 11, 2002, J.K. responded that all parts of the fuel system, including the fuel tanks, fuel lines, rollover valves, carbon canisters, and purge valves, would be inspected during conversion. J.K. agreed that it would assure that all these parts would bear the U.S. model part number, and they would be mounted in the stock U.S. model location using the U.S. specification hardware. J.K. stated that the non-U.S. certified 1999 Ferrari F355 has the same mounting points as its non-U.S. certified counterpart. On May 6, 2002, FNA essentially agreed that if all non-U.S. model parts related to Standard No. 301 were replaced with U.S. model parts, there would be no compliance issue.

49 CFR Part 581—Bumper Standard

On October 24, 2001, FNA pointed out that J.K. had erroneously stated in its petition that the bumpers and the support structure for the bumpers on the non-U.S. certified 1999 Ferrari F355 were the same as those on the U.S. certified model. FNA stated that the U.S. model bumpers are stronger and heavier than those on the non-U.S. certified vehicle. FNA also stated that the bumper support trestle assembly is not part of the non-U.S. model bumper assembly.

On April 11, 2002, J.K. agreed that modifications would be needed to bring the non-U.S. certified 1999 Ferrari F355 into conformance with the Bumper Standard. J.K. identified two ways of doing this. One of those ways was for the bumpers and bumper mounting structures to be replaced with U.S. model parts. The second method would be to modify the non-U.S. model bumpers to meet the standard. J.K. stated that the bumpers on the non-U.S. certified 1999 Ferrari F355 are readily modifiable, in part because they are substantially similar to those on the U.S. certified version of the vehicle. J.K. stated that it planned to use the modifications that it used and tested in connection with its import eligibility petition for the 2001 Ferrari 360 (notice of grant published on April 10, 2002 at 67 FR 17483) to modify the bumper systems on the 1999 Ferrari F355.

On May 6, 2002, FNA contended that any bumper modification on non-U.S. certified 1999 Ferrari F355 vehicles must be tested to demonstrate conformance to the requirements of Part 581. On June 3, 2002, J.K. responded that it had performed testing of its modified bumper system on the 2001 Ferrari 360, and that the testing demonstrated the adequacy of its modification. J.K. also noted that other RIs might choose to install U.S. model bumpers and bumper support structures.

The agency notes that Bumper Standard compliance issues are not directly relevant to an import eligibility decision, as that decision is to be based on the capability of a non-U.S. certified vehicle to be readily altered to conform to the FMVSS, and the Bumper Standard in 49 CFR Part 581 is not an FMVSS. That matter aside, the agency is of the opinion that the test conducted by J.K. of the bumpers on the non-U.S. certified Ferrari 360 is sufficient to demonstrate that the non-U.S. certified 1999 Ferrari F355 is capable of being altered to meet the Bumper Standard.

In consideration of the foregoing, NHTSA has concluded that the non-U.S. certified 1999 Ferrari F355 is substantially similar to the non-U.S. certified version of the vehicle and that it is capable of being readily altered to meet all applicable FMVSS, as well as the Bumper Standard at 49 CFR part 581. Accordingly, the agency has decided to grant the petition.

Vehicle Eligibility Number for Subject Vehicles

The importer of a vehicle admissible under any final decision must indicate on the form HS–7 accompanying entry the appropriate vehicle eligibility number indicating that the vehicle is eligible for entry. VSP–391 is the vehicle eligibility number assigned to vehicles admissible under this notice of final decision.

Final Decision

Accordingly, on the basis of the foregoing, NHTSA hereby decides that 1999 Ferrari F355 passenger cars that were not originally manufactured to comply with all applicable Federal motor vehicle safety standards are eligible for importation into the United States because they are substantially similar to 1999 Ferrari F355 passenger cars originally manufactured for importation into and sale in the United

States and certified under 49 U.S.C. 30115, and are capable of being readily altered to conform to all applicable Federal motor vehicle safety standards.

Authority: 49 U.S.C. 30141(a)(1)(A) and (b)(1); 49 CFR 593.8; delegations of authority at 49 CFR 1.50 and 501.8.

Issued on: November 1, 2002.

Marilynne Jacobs,

Director, Office of Vehicle Safety Compliance.

[FR Doc. 02–28243 Filed 11–5–02; 8:45 am]

BILLING CODE 4910–59–P

DEPARTMENT OF TRANSPORTATION

Surface Transportation Board

[STB Finance Docket No. 34254]

CSX Transportation, Inc.—Trackage Rights Exemption—Norfolk Southern Railway Company

Norfolk Southern Railway Company (NS) has agreed to grant CSX Transportation, Inc. (CSXT) trackage rights on the ''Lima Running Track'' between the connection to NS's subdivision at Eire Junction near milepost SP 90.4 and milepost 91.9 along with associated yard and sidetrackage at South Lima Yard, at Lima, OH, a distance of approximately 1.5 miles.[1]

CSXT stated that it proposed to consummate the transaction on October 22, 2002, but the exemption did not become effective until October 24, 2002 (7 days after the exemption was filed).

The purpose of the trackage rights is to allow CSXT to achieve certain operating economies.

As a condition to this exemption, any employees affected by the trackage rights will be protected by the conditions imposed in *Norfolk and Western Ry. Co.—Trackage Rights—BN,* 354 I.C.C. 605 (1978), as modified in *Mendocino Coast Ry., Inc.—Lease and Operate,* 360 I.C.C. 653 (1980).

This notice is filed under 49 CFR 1180.2(d)(7). If it contains false or misleading information, the exemption is void *ab initio.* Petitions to revoke the exemption under 49 U.S.C. 10502(d) may be filed at any time. The filing of a petition to revoke will not automatically stay the transaction.

An original and 10 copies of all pleadings, referring to STB Finance Docket No. 34254, must be filed with the Surface Transportation Board, 1925 K Street, NW., Washington, DC 20423–0001. In addition, one copy of each pleading must be served on Natalie S. Rosenberg, 500 Water Street, JI50, Jacksonville, FL 32202.

Board decisions and notices are available on our Web site at *www.stb.dot.gov.*

Decided: October 29, 2002.

By the Board, David M. Konschnik, Director, Office of Proceedings.

Vernon A. Williams,

Secretary.

[FR Doc. 02–28071 Filed 11–5–02; 8:45 am]

BILLING CODE 4915–00–P

DEPARTMENT OF THE TREASURY

Customs Service

Notice of Cancellation of Customs Broker Permit

AGENCY: U.S. Customs Service, Department of the Treasury.

ACTION: General notice.

SUMMARY: Pursuant to section 641 of the Tariff Act of 1930, as amended, (19 U.S.C. 1641) and the Customs Regulations (19 CFR 111.51), the following Customs broker local permits are canceled without prejudice.

Name	Permit No.	Issuing port
Arthur Andersen LLP	93–008	Houston.
Arthur Andersen LLP	(no number)	Detroit.
US Express International, Inc.	D–09–01	Dallas/Ft. Worth.
Edward M. Jones Co., Inc.	093	Seattle.
Khosrow Khorraminejad	16001–P	San Francisco.
James F. Mooring	5386–056	Houston.
Fritz Companies, Inc.	007	Great Falls.
Independent Brokerage LLC	056	Great Falls.
Fritz Companies, Inc.	057	Seattle.
Tower Group International, Inc.	112	Seattle.

Dated: October 22, 2002.

Jayson P. Ahern,

Assistant Commissioner, Office of Field Operations.

[FR Doc. 02–28253 Filed 11–5–02; 8:45 am]

BILLING CODE 4820–02–P

DEPARTMENT OF THE TREASURY

Customs Service

Notice of Revocation of Customs Broker License

AGENCY: Customs Service, Department of the Treasury.

ACTION: General notice.

SUMMARY: Pursuant to section 641 of the Tariff Act of 1930 as amended (19 U.S.C. 1641) and the Customs Regulations [19 CFR 111.45(a)], the following Customs broker license is revoked by operation of law.

Name	License No.	Port
General Shipping, Inc.	7650	New York.

Dated: October 22, 2002.

Jayson P. Ahern,

Assistant Commissioner, Office of Field Operations.

[FR Doc. 02–28251 Filed 11–5–02; 8:45 am]

BILLING CODE 4820–02–P

DEPARTMENT OF THE TREASURY

Customs Service

Notice of Revocation of Customs Broker Permit

AGENCY: Customs Service, Department of the Treasury.

ACTION: General notice.

[1] An unredacted version of the Trackage Rights Agreement, as required by 49 CFR 1180.6(a)(7)(ii), was concurrently filed under seal along with the motion for a protective order. That motion was granted and a protective order was issued in a decision served on October 24, 2002.

SUMMARY: Pursuant to section 641 of the Tariff Act of 1930 as amended (19 U.S.C. 1641) and the Customs Regulations [19 CFR 111.45(b)], the following Customs Broker Permit is revoked by operation of law.

Name	Permit No.	Issuing port
Leschaco, Inc. ...	96006	Los Angeles.

Dated: October 22, 2002.

Jayson P. Ahern,

Assistant Commissioner, Office of Field Operations.

[FR Doc. 02–28252 Filed 11–5–02; 8:45 am]

BILLING CODE 4820–02–P

DEPARTMENT OF THE TREASURY

Customs Service

Notice of Cancellation of Customs Broker License

AGENCY: Customs Service, Department of the Treasury.

ACTION: General notice.

SUMMARY: Pursuant to section 641 of the Tariff Act of 1930, as amended, (19 U.S.C. 1641) and the Customs Regulations (19 CFR 111.51), the following Customs broker licenses and any and all associated local and national permits are canceled without prejudice.

Name	License No.	Issuing port
William F. Joffroy, Inc.	03897	Nogales.
American Customs Brokers, Inc.	11321	Duluth.
W.Y. Moberly, Inc.	02926	Great Falls.
Trans-Border Customs Services, Inc.	11408	Champlain.
Miles & Joffroy, Inc.	11296	San Diego.
Rudolph Miles & Sons, Inc.	04665	El Paso.
H.A. & J.L. Wood, Inc.	04057	Pembina.
Associated Customs Brokers, Inc.	10448	Pembina.
Galax, Inc	21362	New York.
Arthur Andersen LLP.	13678	Detroit.

Dated: October 22, 2002.

Jayson P. Ahern,

Assistant Commissioner, Office of Field Operations.

[FR Doc. 02–28250 Filed 11–5–02; 8:45 am]

BILLING CODE 4820–02–P

UNITED STATES INSTITUTE OF PEACE

Sunshine Act Meeting Notice

DATE/TIME: Thursday, November 21, 2001; 9:30 a.m.—5:30 p.m.

LOCATION: 1200 17th Street, NW, Suite 200—Conference Room, Washington, DC 20036.

STATUS: Open Session—Portions may be closed pursuant to subsection (c) of section 552(b) of Title 5, United States Code, as provided in subsection 1706(h)(3) of the United States Institute of Peace Act, Public Law 98–525.

AGENDA: November 2002 Board Meeting; Approval of Minutes of the One Hundred Sixth Meeting (September 19, 2002) of the Board of Directors; Chairman's Report; President's Report; Committee Reports; Other General Issues.

CONTACT: Mr. John Brinkley, Director, Office of Public Outreach, Telephone: (202) 457–1700.

Dated: October 30, 2002.

Harriet Hentges,

Executive Vice President, United States Institute of Peace.

[FR Doc. 02–28380 Filed 11–4–02; 2:05 am]

BILLING CODE 6820–AR–M

Federal Register

Wednesday,
November 6, 2002

Part II

Department of Energy

Federal Energy Regulatory Commission

18 CFR Parts 101, 201, and 352

Accounting and Reporting of Financial Instruments, Comprehensive Income, Derivatives and Hedging Activities; Final Rule

DEPARTMENT OF ENERGY

Federal Energy Regulatory Commission

18 CFR Parts 101, 201 and 352

[Docket No. RM02–3–000; Order No. 627]

Accounting and Reporting of Financial Instruments, Comprehensive Income, Derivatives and Hedging Activities

October 10, 2002.

AGENCY: Federal Energy Regulatory Commission.

ACTION: Final rule.

SUMMARY: The Federal Energy Regulatory Commission is amending its regulations to update the accounting and financial reporting requirements under its Uniform Systems of Accounts for jurisdictional public utilities and licensees, natural gas companies and oil pipeline companies. The Commission is establishing uniform accounting requirements and related accounts for the recognition of changes in the fair value of certain security investments, items of other comprehensive income, derivative instruments, and hedging activities. The Commission is adding new balance sheet accounts to the Uniform Systems of Accounts to record items of other comprehensive income and derivative instruments. The Commission is also adding new general instructions and revising certain account instructions to incorporate the above changes in the existing Uniform Systems of Accounts. And, the Commission is revising the following Annual Reports: FERC Form Nos. 1, 1–F, 2, 2–A and 6 to include the new accounts and a new schedule contained in the final rule.

The Commission is severing from this rulemaking proceeding the inquiry on whether independent and affiliated power marketers, and power producers should continue to be eligible, on a case by case basis, for waiver of the Commission's Uniform Systems of Accounts and blanket approval under part 34 of the Commission's regulations for the issuance of securities and the assumptions of liabilities. The Commission will consider separately the issue of accounting and reporting requirements by gas marketers, independent and affiliated power marketers, and power producers.

An important objective of the rule is to provide sound and uniform accounting and financial reporting for the above types of transactions and events. The new accounts and reporting schedule will add visibility, completeness and consistency of accounting and reporting changes in the fair value of certain financial instruments, items of other comprehensive income, derivative instruments and hedging activities, in the above mentioned FERC Forms.

EFFECTIVE DATE: The rule will become effective January 6, 2003.

FOR FURTHER INFORMATION CONTACT:

Mark Klose (Technical Information), Office of the Executive Director, Federal Energy Regulatory Commission, 888 First Street, NE., Washington, DC 20426. (202) 502–8283.

Julia A. Lake (Legal Information), Office of the General Counsel, Federal Energy Regulatory Commission, 888 First Street, NE., Washington, DC 20426. (202) 502–8370.

SUPPLEMENTARY INFORMATION:

Table of Contents

I. *Introduction*
II. *Background*
III. *Discussion*
A. General
B. Inquiry Concerning Waivers Given to Marketers and Others
C. Accounting for Trading and Available-for-Sale Type Securities
D. Accounting for Other Comprehensive Income
E. Accounting for Derivatives and Hedging Activities
1. General
2. General Instructions for Fair Value and Cash Flow Hedges
3. Changes to General Instruction 21 Allowances
4. Accounting for Derivative Assets and Liabilities
a. Balance Sheet Classification for Derivative Assets and Liabilities
b. Income Statement Classification for Changes in Value of Derivative Instruments
c. Inclusion of the Normal Purchases and Sales Scope Exception
F. Changes to the FERC Annual Report Forms
G. Disclosure Requirements
H. Miscellaneous Items
IV. *Regulatory Flexibility Act Certification*
V. *Environmental Impact Statement*
VI. *Information Collection Statement*
VII. *Document Availability*
VIII. *Effective Date and Congressional Notification*
Regulatory Text
Appendix A—List of Commenters
Appendix B—Revised Schedules for Forms 1, 1–F, 2, 2–A, and 6

Before Commissioners: Pat Wood, III, Chairman; William L. Massey, Linda Breathitt, and Nora Mead Brownell.

I. Introduction

1. The Federal Energy Regulatory Commission (Commission) is amending its accounting and financial reporting regulations. In a notice of proposed rulemaking issued on December 20, 2001, and published in the **Federal Register** on January 8, 2002 (67 FR 1025), the Commission proposed to amend its Uniform Systems of Accounts [1] for public utilities and licensees,[2] natural gas companies [3] and oil pipeline companies [4] by establishing uniform accounting requirements for the recognition of changes in the fair value of certain security investments, items of other comprehensive income, derivative instruments, and hedging activities. The Commission is adding new balance sheet accounts to the Uniform Systems of Accounts to record items of other comprehensive income and changes in the fair value of derivative instruments. The Commission is also adding new general instructions for the accounting of derivative instruments and hedging activities along with new instructions for the accounting of items of other comprehensive income. Revisions to existing investment asset accounts and general instructions will incorporate fair value accounting for trading and available-for-sale type security investments.

2. Additionally, the Commission is revising the following Annual Reports: FERC Form No. 1, Annual Report of Major Public Utilities, Licensees and Others (Form 1); FERC Form No. 1–F, Annual Report of Nonmajor Public Utilities and Licensees (Form 1–F); FERC Form No. 2, Annual Report of Major Natural Gas Companies (Form 2); FERC Form No. 2–A, Annual Report of Nonmajor Natural Gas Companies (Form 2–A); and Form No. 6, Annual Report of Oil Pipeline Companies (Form 6) to include the new accounts and a new schedule.[5]

[1] Section 301(a) of the Federal Power Act (FPA), 16 U.S.C. 825(a), section 8 of the Natural Gas Act (NGA), 15 U.S.C. 717g and section 20 of the Interstate Commerce Act (ICA), 49 App. U.S.C. 20 (1988), authorize the Commission to prescribe rules and regulations concerning accounts, records and memoranda as necessary or appropriate for the purposes of administering the FPA, NGA and the ICA. The Commission may prescribe a system of accounts for jurisdictional companies and, after notice and opportunity for hearing, may determine the accounts in which particular outlays and receipts will be entered, charged or credited.

[2] Part 101 Uniform System of Accounts Prescribed for Public Utilities and Licensees Subject to the Provisions of the Federal Power Act. 18 CFR part 101 (2002).

[3] Part 201 Uniform System of Accounts Prescribed for Natural Gas Companies Subject to the Provisions of the Natural Gas Act. 18 CFR part 201 (2002).

[4] Part 352 Uniform System of Accounts Prescribed for Oil Pipeline Companies Subject to the Provisions of the Interstate Commerce Act. 18 CFR part 352 (2002).

[5] The FERC Annual Reports bear the following OMB approvals: Form No. 1 has OMB approval number 1902–0021; Form No. 1–F has OMB approval number 1902–0029; Form No. 2 has OMB

3. These revisions are being made to improve the usefulness of financial information provided to the Commission and other users of the FERC Forms by establishing uniform accounting and reporting requirements for items of other comprehensive income, changes in the fair value of investment securities, derivatives, and hedging activities. An important objective of the rule is to provide sound and uniform accounting and financial reporting for the above types of transactions and events. The Commission is of the view that such requirements are needed because these types of transactions and events are not specifically addressed in the existing Uniform Systems of Accounts or in FERC Forms 1, 1–F, 2, 2–A, and 6. This final rule is part of the Commission's ongoing effort to address emerging financial and accounting developments within the context of the Uniform Systems of Accounts.

II. Background

4. In recent years, fair value measurements have become useful in assisting investors, creditors and other users of the financial data in making rational investment, credit and similar decisions. The use of fair value as a measurement attribute for financial reporting has grown in importance and relevance. Despite this fact, the companies that this Commission regulates traditionally have had only a relatively small number of transactions for which fair value measurements would be appropriate. This, however, is changing. As the regulated industries restructure and a greater percentage of sales are based on other than cost-of-service, fair value will increasingly provide a relevant measure of economic effects for a growing number of transactions and events. The usefulness of fair value information has resulted in the Financial Accounting Standards Board (FASB) issuing new accounting pronouncements affecting the manner in which certain types of financial instruments, derivatives and hedging activities are measured and reported in the financial statements applicable to entities in general.[6]

5. The Commission considers the requirements contained in Financial Accounting Standards (FAS) 115, 130 and 133 to be an improvement in financial accounting and reporting practices if properly implemented and interpreted for filings made with this agency. While some companies have implemented certain aspects of these pronouncements, the implementation has not been uniform concerning the accounting and reporting to the Commission in the FERC Forms 1, 1–F, 2, 2–A, and 6.

6. On August 10, 2001, the Commission's Chief Accountant issued interim accounting guidance on the proper accounting and reporting requirements for financial instruments, comprehensive income, derivatives and hedging activities.[7] This interim accounting guidance was subsequently followed by a notice of proposed rulemaking (NOPR) issued on December 20, 2001, in which the Commission proposed changes to its accounting and financial reporting requirements to establish uniform accounting and reporting of the above mentioned items.[8]

7. The Commission received numerous comments from interested parties on its proposed changes to the accounting and financial reporting requirements. As more fully discussed below, the Commission is issuing this final rule to provide guidance on the proper interpretation and implementation of the principles and concepts set forth in FAS 115, 130 and 133 for accounting and financial reporting to the FERC.

III. Discussion

A. General

8. As discussed in the NOPR, the current accounting and financial reporting standards for certain investment securities, derivative instruments, and hedging activities were developed when companies that this Commission regulates had only a relatively small number of transactions for which fair value measurements would be appropriate. As a result of the increased usage of derivative instruments to manage risk along with recent developments in the accounting profession, the Commission proposed revisions to its accounting and financial reporting requirements to provide greater visibility and transparency of these transactions and to help minimize inconsistent accounting and reporting of the above mentioned items.

9. The Commission received 36 comments concerning various aspects of the proposed rule.[9] The majority of commenters were supportive of the Commission's effort to provide interpretative guidance on the application of generally accepted accounting principles to jurisdictional entities that presently file financial information to the Commission in Annual Report Forms 1, 1–F, 2, 2–A, and 6.[10] Additionally, some commenters did not find the new standards as reflected in the proposed regulations unduly burdensome and have already implemented the principles and concepts contained in FAS 115, 130 and 133.[11]

10. The addition of new accounts and related general instructions is intended to improve the visibility, completeness and consistency of accounting and reporting of changes in the fair value of certain investment securities, items of other comprehensive income, derivatives and hedging activities. The addition of new accounts will enhance the Commission's understanding of the nature and extent to which derivatives and hedging activities are used by regulated entities and the impact these transactions and events have on their financial condition. With a greater understanding of the financial impact that derivative instruments have on regulated entities the Commission will be in a better position to make more informed decisions that affect the industries it regulates.

11. Also, the addition of the new reporting requirements to the FERC Forms 1, 1–F, 2, 2–A and 6 will reduce regulatory uncertainty as to the proper accounting and reporting for these items, and minimize regulatory burden by reducing the potential differences in the manner in which these amounts are reported to shareholders and to the Commission.

B. Inquiry Concerning Waivers Given to Marketers and Others

12. There are a number of public utilities with market-based rates that have received waivers from the Commission's Uniform System of Accounts, and thus would not be subject to the rule, for as long as the Commission continues the waivers. For instance, parts 41, 101, and 141 of the Commission's regulations prescribe

approval number 1902–0028; Form No. 2–A has OMB approval number 1902–0030; and Form No. 6 has OMB approval number 1902–0022.

[6] The accounting pronouncements issued by FASB were Financial Accounting Standards (FAS) 115, Accounting for Certain Investments in Debt and Equity Securities, 130, Reporting Comprehensive Income, and 133, Accounting for Derivative Instruments and Hedging Activities, as amended by 138, Accounting for Certain Derivative Instruments and Certain Hedging Activities. These accounting pronouncements may be obtained from FASB at (*http://accounting.rutgers.edu/raw/fasb/*).

[7] *See,* All Jurisdictional Public Utilities and Licensees, Natural Gas Companies, and Oil Pipeline Companies, 97 FERC 62,147 (2001).

[8] *See* 97 FERC 61,321 (2001).

[9] *See* appendix A for Listing of Commenters.

[10] *See* for example APGA at p. 1, EEI at p. 3, Dominion at p. 5, Pinnacle West at p. 3, Sempra at p. 1, Portland General at p. 3, NRECA at p. 6, Ohio PUC at p 2, NYPUC at p. 2, and Williams at p. 2.

[11] *See* for example Williams at p. 4.

certain informational requirements that focus on the physical assets that a public utility owns. For market-based rate applications by public utilities, the Commission has taken the position that since a marketer does not own any electric power generation or transmission facilities, its jurisdictional facilities would be only corporate and documentary, its costs would be determined by utilities that sell power to it, and its earnings would not be defined and regulated in terms of an authorized return on invested capital, and that, accordingly, it would grant waivers to marketers of the requirements of these parts. The Commission has also granted power marketers and others their requests for blanket approval under part 34 of the Commission's regulations for all future issuances of securities and assumptions of liability, assuming that no party objects to such treatment during a notice period which the Commission provides.[12] The Commission concluded that since marketers do not obligate themselves to serve electric consumers, the requirements are inapplicable.[13]

13. As the development of competitive wholesale power markets continues, however, independent and affiliated power marketers, and power producers are playing more significant roles in the electric power industry. In light of the evolving nature of the electric power industry, the Commission sought comment in the NOPR on the extent to which these entities should be required to follow the Uniform System of Accounts, what financial information, if any, should be reported by these entities, how frequently it should be reported, and, in particular, whether these exempted entities should be subject to reporting the information required in the proposed regulations.

14. Furthermore, the Commission sought comments on whether it should rescind the part 34 blanket authorizations granted to independent and affiliated power marketers and power producers and require these entities to comply with the filing requirement of part 34 for all future issuances of securities and assumptions of liabilities. The purpose of requiring these marketers and producers to comply with these regulations would not be to ensure their financial viability under section 204 of the FPA. Rather, it would be to promote transparency and facilitate investor risk analysis which in the long run promotes infrastructure and competition, and makes rates more just and reasonable.

15. Most commenters stated that the Commission should not revoke the existing waivers. They argue that the basis for the Commission initially granting the waivers has not changed. They stated that marketers do not own any electric power generation or transmission facilities; their jurisdictional facilities are only corporate and documentary; their costs are determined by utilities that sell power to it; and their earnings are not defined and regulated in terms of an authorized return on invested capital.[14]

16. They also argue that the marketers would incur substantial costs if required to add new accounting systems at this time to capture data required by the Uniform System of Accounts.[15] Additionally, they assert that providing the data could place the marketers in a competitive disadvantage because the information is proprietary in nature.[16]

17. Furthermore, they argue that the application of the Uniform System of Accounts, and the approval of the issuance of securities does not work well with power marketers and power producers, because these requirements are focused on providing accurate information for the determination of cost-based rates, and the accounting rules are not relevant to entities with market-based rate authority.[17]

18. Regarding the filing requirements of part 34, some commenters stated that this regulation was intended to prevent the issuance of securities that might impair the company's ability to perform its public utility responsibilities, however independent and affiliated power marketers and power producers are not public utilities with such responsibilities. They state that applying part 34 to power marketers would be unreasonable because it is unclear how the Commission could determine whether particular issuances are compatible with the public interest and could force power marketers out of business.[18]

19. One commenter stated that there are indications within the NOPR that the Commission does not intend its proposed rule to apply to gas marketers. They requested that the Commission clarify its intent to exempt gas marketers from the Uniform System of Accounts and related annual reporting requirements, and continue to honor the existing waivers previously granted to these entities.[19] Others state that the new rules should not sweep in qualified facilities and other on-site generators that primarily serve host facilities.[20] Finally, some commenters stated that other government agencies such as the U.S. Securities and the Exchange Commission (SEC) and the Commodity Futures Trading Commission (CFTC) are better suited to regulate accounting and the use of financial derivatives.[21]

20. Some commenters however supported extending the accounting and reporting requirements to marketers, power producers, and affiliates with market based rates.[22] They argue that the events of the last few months justify these new requirements. In their view, in light of the public's better understanding of the role derivatives play in energy security, the need for the Commission to obtain such information outweighs the reasons for exempting such entities. They state that the Commission requires a comprehensive picture of the marketplace and that the picture is incomplete if these entities are exempted from reporting requirements.[23] In their view, the requirements would help state regulators in reviewing financial activities that may subject utilities to financial risk. Therefore, they recommend that affiliates of utilities be subject to existing and proposed Uniform System of Accounts requirements insofar as derivative and hedging transactions may impact and affect traditional utilities.

21. One commenter suggested the possibility of requiring independent and affiliated power marketers and power producers to maintain a translation matrix, certified by the company's ethics officer, that could quickly convert its current method of maintaining financial records into the Uniform System of Accounts. Thus, information

[12] We note that the Commission's jurisdiction over issuances of securities and assumptions of liabilities under section 204 of the FPA applies only to entities that are public utilities as defined in the FPA and only where the public utilitity's security issues are not regulated by a State commission (*see* FPA section 204(f)).

[13] *See, e.g.,* St. Joe Minerals Corp, 21 FERC 61,323 (1982); Cliffs Electric Service Company, 32 FERC 61,372 (1985); Citizens Energy Corporation, 35 FERC 61,198 (1986); Howell Gas Management Company, 40 FERC 61,336 (1987); Citizens Power & Light Corporation, 48 FERC 61,210 (1989); National Electric Associates Limited Partnership, 50 FERC 61,378 (1990); and Nevada Sun-Peak Limited Partnership, 86 FERC 61,243 (1999).

[14] *See* for example, EEI at p. 14, Sempra at p. 1, and APX at p. 8.

[15] *See* for example, Sempra at p. 12.

[16] *See* for example, Avista at p. 7, Competitive at p. 16, and NEM at p. 5.

[17] *See* for example, EEI at p. 15, Dominion at p. 7.

[18] *See* for example, EEI at p. 16, Dominion at p. 7, Sempra at p. 13, Avista at p. 7, and Calpine at p. 6.

[19] *See* Sempra at p. 6 and 7.

[20] *See* American Forest at p. 5.

[21] *See* Calpine at p. 3.

[22] *See* NYPSC at p. 2 and 3, Ohio PUC at p. 5, APGA at p. 14, and NRECA at p. 5.

[23] *See* APGA at p. 15.

need not be filed but would be available in a consistent and easily understandable format if necessary.[24] Another commenter recommended that the Commission expand its data collection on derivative instruments. The purpose for derivative data collection should be not only to assist the Commission in its monitoring efforts, but also to further the transparency of the energy derivatives markets. The Commission should collect and make summary data available to potential buyers and sellers in the market, and in essence provide market participants with a forward price curve, allowing them to benchmark proposed deals.[25]

22. Finally, some commenters indicated that the Commission needs to reform its data resources with regard to monitoring competitive electric markets and market based sellers. If any changes are to be considered with regard to information review, the Commission should employ a thoughtful stakeholder process, such as a technical conference, to identify its information needs.[26]

23. The Commission has decided to sever from this rulemaking proceeding the inquiry on whether independent and affiliated power marketers and power producers should continue to be exempt from the Commission's Uniform System of Accounts and other reporting requirements. The Commission thus will consider separately the issue of what information collection and recordkeeping requirements it may impose on gas marketers, independent and affiliated power marketers, and power producers. While the Commission is sensitive to the fact that independent and affiliated power marketers and power producers and their use of derivatives are playing a more significant financial role in this evolving electric power industry, we also recognize the need to reform the approach used to monitor competitive electric markets and market based sellers in the context of a number of current and ongoing Commission initiatives.

24. For example, there are several ongoing investigations that may impact on the direction the Commission may take *vis-a-vis* power marketers and power producers. In addition, the Commission is currently reviewing its existing reporting requirements to determine what new information needs to be collected to monitor competitive energy markets, the sources for that information, how often that information should be updated, and how the Commission should gain access to specific information as needed in order to effectively monitor energy markets. The Commission thus will hold technical conferences and outreach meetings on these matters.

C. Accounting for Trading and Available-for-Sale Type Securities

25. In May 1993, the FASB issued Financial Accounting Standard (FAS) 115, Accounting for Certain Investments in Debt and Equity Securities, effective for fiscal years beginning after December 15, 1993. This statement addressed the accounting and reporting for investments in equity securities that have a readily determinable fair value and for all investments in debt securities, and its major provisions were summarized in the NOPR.

26. Under the Commission's Uniform Systems of Accounts for public utilities and licensees, and natural gas companies, all types of securities are recorded at cost and subsequent changes in the fair value of security investments are normally not recognized in the financial statements until realized. The Uniform System of Accounts for oil pipeline companies however, permits the recognition of decreases in the carrying value of investment securities, but currently would not permit the carrying value to be increased.

27. The Commission is of the view that fair value measurement of the trading and available-for-sale type securities presents relevant and useful information to regulators and others. For example, fair value measurements provide useful information to the Commission concerning the status of certain amounts set aside to fund future obligations such as decommissioning nuclear plants.

28. The Commission therefore proposed to add language to its security investment accounts for public utilities and licensees, natural gas companies, and oil pipeline companies to permit the recognition of changes in the fair value of trading and available-for-sale types of securities due to unrealized holding gains and losses.[27] The Commission also proposed amending its oil pipeline General Instruction 1–15, accounting for marketable equity securities, and removing oil pipeline accounts 23, 24, and 75.5 to conform the regulations to the proposed changes.

29. The Commission received no objections concerning its proposal to include unrealized holding gains and losses on certain qualifying securities in the investment asset accounts, or to its proposal to amend its oil pipeline General Instruction 1–15 to conform the regulations to the proposed changes. Therefore the Commission will revise the instructions to its investment accounts and make conforming changes to the applicable oil pipeline General Instruction 1–15, to require the recording of unrealized holding gains and losses on certain eligible investment securities.

30. As part of the accounting for recording unrealized holding gains and losses on certain investment securities, the Commission proposed to include in a separate section of stockholders equity, the corresponding change in value of these securities. Some commenters stated that changes in the carrying value of certain securities that will be ultimately used in the development of future rates, such as nuclear decommissioning trust funds, are better reflected in a regulatory asset or a regulatory liability account rather than in accumulated other comprehensive income when it is probable that the customer, rather than the stockholder, will be affected by changes in the value of these securities. They indicated that it is prevailing practice within the electric industry to record regulatory assets or liabilities when it is probable that such changes in the fair market value will be considered by regulators in the setting of rates in future proceedings.[28] Such prevailing practice according to the commenters is in accordance with the provisions of FAS 71, ''Accounting for the Effects of Certain Types of Regulation.'' In order to implement this change, the commenters recommended that the final rule should include revised account descriptions of accounts 182.3 and 254 to include certain items of other comprehensive and the new General Instruction for accounting for other comprehensive income should be revised accordingly.

31. The Commission agrees that under certain circumstances it may be appropriate for rate regulated entities to report unrealized holding gains and losses on certain investment securities as regulatory assets or regulatory liabilities pursuant to Order 552 which

[24] *See* Ohio PUC at p. 5.

[25] *See* NRRECA at p. 5.

[26] *See* for example, Congentrix at p. 10, DENA at p. 10, EPSA at p. 3, and J. Aron at p. 11.

[27] The security investment accounts for public utilities and gas pipeline companies are: Account 124, other investments; account 125, sinking funds (major only); account 126, depreciation fund (major only); account 127, amortization fund (major only); account 128, other special funds (major only); and account 129, special funds (nonmajor only). The security investment asset accounts for oil pipelines are account 11, temporary investments; account 21, other investments; and account 22, sinking and other funds.

[28] *See* for example, EEI at p. 12, and NRECA at p. 8.

adopted the accounting standards set forth in FAS 71.[29] The Commission will revise its proposed General Instruction for accounting of other comprehensive income and its existing regulatory asset and liability accounts accordingly.

D. Accounting for Other Comprehensive Income

32. In June 1997, the FASB issued FAS 130, Reporting Comprehensive Income. This statement established the standards for reporting comprehensive income in a full set of general-purpose financial statements effective for fiscal years beginning after December 15, 1997. Comprehensive income represents the change in equity of an entity during a period from transactions and other events and circumstances from nonowner sources. Comprehensive income is composed of traditional net income plus items of ''other comprehensive income.'' [30] The major provisions of this statement were summarized in the NOPR.

33. The Commission proposed to revise the Uniform Systems of Accounts for public utilities and licensees, natural gas companies and oil pipeline companies to provide accounting for items of other comprehensive income, and proposed the creation of two new equity accounts to record the activity related to other comprehensive income. The proposed new accounts would require supporting records be maintained by each category of other comprehensive income for reporting the information in the FERC Forms 1, 1–F, 2, 2–A, and 6.

34. The Commission also proposed instructions to the other comprehensive income accounts for all jurisdictional entities that would require supporting records be maintained by each category of other comprehensive income. This level of record keeping is required so that the entity is able to identify the amounts associated with the item of other comprehensive income when it enters into the determination of net income in subsequent periods.

35. Many commenters questioned the need and the benefit of using two accounts for the recognition of other comprehensive income, along with the requirement to transfer amounts of other comprehensive income from account 219.1 to account 219 at the balance sheet date. In their view this was a duplicative requirement and therefore they recommended the use of only one equity account for the recognition of other comprehensive income.[31]

36. Based upon the comments received the Commission agrees that one equity account can accommodate all of the activity provided that sufficient detailed records are maintained in order to identify and display current years' activity for items of other comprehensive income, in addition to providing a year-to-date summary of the activity. Therefore, the Commission will create only one account for public utilities and licensees, and natural gas companies entitled account 219, accumulated other comprehensive income, and one account for oil pipeline companies entitled account 77, accumulated other comprehensive income, to record amounts for items of other comprehensive income in stockholders equity. However, the Commission will keep the requirements originally set forth in the NOPR that detailed records be maintained so that the current period activity, year-to-date activity, and reclassification adjustments related to items of other comprehensive income can be readily identified. Maintaining detailed records for items included in accumulated other comprehensive income are necessary so that an entity can readily identify amounts when the item is included in net income in subsequent periods and to periodically report this information in the new reporting schedule entitled Accumulated Other Comprehensive Income and Hedging Activities.

37. Finally, the NOPR proposed the need for reclassification adjustments for items of other comprehensive income to avoid double counting an item in net income and other comprehensive income. The proposed instructions would have required that reclassification adjustments be made directly to other comprehensive income. This proposed accounting treatment for reclassification adjustments would minimize the need for creating a new account to capture amounts solely related to reclassification adjustments.

38. No commenters objected to the proposed accounting for reclassification adjustments. The Commission will therefore adopt the proposed accounting for reclassification adjustments.

E. Accounting for Derivatives and Hedging Activities

1. General

39. In June 1998, the FASB issued FAS No. 133, Accounting for Derivative Instruments and Hedging Activities, as amended on June 2000, by FAS 138, Accounting for Certain Derivative Instruments and Certain Hedging Activities. This pronouncement was issued in a response to an increased use of derivatives and to resolve problems with the accounting and reporting practices for derivatives and hedging activities. These problems included incomplete and inconsistent accounting guidance on the effects of derivative transactions and hedging activities. The effects of derivatives were not transparent in the basic financial statements, and many derivative instruments were carried ''off-balance-sheet'' regardless of whether they were formally part of a hedging strategy. The NOPR summarized the key points of the pronouncement.

2. General Instructions for Fair Value and Cash Flow Hedges

40. The Commission proposed to add a new general instruction that would require public utilities and licensees, natural gas companies, and oil pipeline companies to record changes in the fair value of the derivative instrument designated as a cash flow hedge to other comprehensive income. The proposed instructions would also require jurisdictional entities to record changes in the fair value of a derivative instrument designated as a fair value hedge in the new derivative asset or liability account with a corresponding adjustment to a subaccount of the asset or liability that carries the item being hedged. The ineffective portion of the cash flow and fair value hedges would be charged to the same income or expense account that will be used when the hedged item enters into the determination of net income.

41. No commenters objected to the above proposal regarding the use of a subaccount to adjust the carrying amount of the asset or liability being hedged under a fair value hedge, or the proposal to include the ineffective portion of the hedge in the same income or expense account that will be used when the hedged item enters into the determination of net income.[32] Therefore, the Commission will implement this change as proposed.

[29] *See* Revisions to Uniform Systems of Accounts to Account for Allowances Under the Clean Air Act Amendments of 1990 and Regulatory-Created Assets and Liabilities and to Form Nos. 1, 1–F, 2 and 2–A. Order No. 552, 58 FR17982 (Apr. 7, 1993), FERC Stats & Regs. Regulations Preambles January 1991-June 1996 30,967 (Mar. 31, 1993).

[30] Comprehensive income is defined by FASB in Concepts Statement No. 6 as, ''the change in equity [net assets] of a business enterprise during a period from transactions and other events and circumstances from nonowner sources. It includes all changes in equity during a period except those resulting from investments by owners and distributions to owners.''

[31] *See,* for example, EEI at p. 5, AEP at p. 2, Dominion at p. 14, Southern at p. 1, and Pinnacle at p. 3.

[32] *See* FAS 133 as amended by FAS 138 for definition, examples and illustrations of assessing effectiveness and measuring ineffectiveness for fair value and cash flow hedges.

3. Changes to General Instruction 21 Allowances

42. The Commission proposed to make technical changes to its existing general instructions concerning the accounting for hedge transactions related to exchange traded allowance future contracts. General Instruction No. 21, allowances, of part 101, directs public utilities to defer in account 186, miscellaneous deferred debits, or account 253, other deferred credits, the costs and benefits from hedging transactions associated with exchange traded allowance future contracts. The Commission proposed to delete paragraph I to be consistent with proposed accounting for derivatives. The accounting framework proposed for derivatives would also include exchange traded future allowances. No commenters objected to the changes proposed to General Instruction 21, allowances, therefore, the Commission will implement the changes as proposed.

4. Accounting for Derivative Assets and Liabilities

a. Balance Sheet Classification for Derivative Assets and Liabilities

43. The NOPR proposed establishing new balance sheet accounts to record derivative assets and liabilities. Under the proposal, derivative assets and liabilities would be accounted for and reported to the Commission based upon their intended use. Derivatives used for hedging activities would be classified in accounts 176 and 245 for public utilities and licensees, and natural gas companies, and accounts 47 and 66 for oil pipeline companies.[33] Derivatives used in non-hedging activities would be classified in accounts 175 and 244 for public utilities and licensees, and natural gas companies, and accounts 46 and 65 for oil pipeline companies.

44. The Commission also noted in the NOPR that entities are required to classify derivative assets and liabilities as current or long-term on their financial statements reported to the U.S. Securities and Exchange Commission (SEC) and in Annual Reports to Stockholders. The Commission stated that entities may create current and long-term subaccounts associated with the proposed new derivative balance sheet accounts in order to facilitate reporting derivative assets and liabilities to shareholders in general purpose financial statements.

45. Some commenters responded that the Commission should create current and long-term accounts to record derivative assets and liabilities on the balance sheet.[34] They stated that the Commission's Uniform System of Accounts includes separate sections for current and accrued assets and deferred debits, as well as current liabilities and deferred credits, and that FERC requires that other items be reported as current or long-term. They also stated that the establishment of current and long-term accounts would reduce the potential for misclassifications between current and long-term subaccounts of the proposed new accounts.

46. At this time the Commission declines to adopt the commenters' suggestion that derivative assets and liabilities should be reported to the Commission based upon a current or long-term balance sheet distinction. It is important for the Commission to obtain information concerning the nature of the derivative transactions that jurisdictional entities have entered into to manage their financial and other business risks. By reporting to the Commission derivative instruments used to hedge business risks separately from those derivative instruments used for non-hedging activities, the Commission and other regulators will have enhanced information as to the positions regulated entities have at the balance sheet date related to the entities' hedging and non-hedging activities. This important distinction would not be transparent if derivative instruments were displayed in the FERC Forms 1, 1–F, 2, 2–A and 6 based upon a current or long-term balance sheet classification. Additionally, reporting derivative instruments based upon their intended use will assist regulators in assessing the activities of jurisdictional entities related to their traditional utility business as compared to their trading activities.

b. Income Statement Classifications for Changes in the Value of Derivative Instruments

47. The Commission proposed that public utilities and licensees, and natural gas companies would use account 421, miscellaneous nonoperating income, and oil pipeline companies would use account 660, miscellaneous income charges, to record on the income statement the change in the fair value of the derivative instruments not used in hedging activities.

48. One commenter specifically supported the use of account 421 to record gains and losses on non-hedge activities.[35] They indicated that using account 421 to record gains and account 426.5 to record losses did not provide valuable information and they found it very difficult to separate gains and losses due to the large volumes of derivative transactions from power trading activities. However, other commenters asserted that account 421 is appropriate when there is an increase in the fair value of a derivative instrument, and account 426.5 is appropriate when there is a decrease in the fair value of the derivative instrument.[36]

49. The Commission concurs with the commenters that a better accounting and financial presentation is not to net gains and losses in one income statement account, but rather to record gains from non-hedging activities in account 421 and losses in account 426.5, for electric and natural gas companies. The use of separate income statement accounts to record gains and losses on derivative instruments used in non-hedging activities follows our existing accounting practice for exchange traded emission allowances. Finally, the Commission will also require that oil pipelines record gains in account 640, miscellaneous income, and losses in account 660, miscellaneous income charges, to better reflect increases and decreases in the fair value of derivative instruments not used in hedging activities on the income statement.

50. This accounting will aid the Commission and other users of the FERC Forms 1, 1–F, 2, 2–A and 6 to see more clearly the extent to which gains or losses have been incurred on non-hedging derivative transactions. And, by separately recording changes in the value of derivative instruments in separate income and expense accounts, any subsequent reclassification of amounts will be better displayed if a regulator chooses to include a portion of the holding gains or losses, or realized gains or losses, in the development of rates.

51. While respondents did not object to the use of below-the-line income statement accounts to record both unrealized and realized gains or losses on derivative instruments used for non-hedging activities, there were many views on what the appropriate accounting should be in instances when a regulator incorporates all or part of the actual gain or loss in the development of rates. The Commission proposed that when a regulator explicitly approves the inclusion of the changes in fair value of derivative instruments in the

[33] *See* FAS 133 as amended by FAS 138 for discussion and examples of hedging activities.

[34] *See* for example EEI at p. 8 and 9, AEP at p. 2, and Dominion at p. 13.

[35] *See* Cinergy at p. 4.

[36] *See* for example Southern Company at p. 3 and EEI at p. 12.

development of rates, the company should reclassify those amounts from the below-the-line income statement accounts to the appropriate utility operating revenue or expense account that will be charged with the derivative transaction when it settles.

52. Some commenters indicated that it is inappropriate to record the changes in the fair value of non-hedge type derivative instruments in a below-the-line account prior to settlement, only to reclassify some or all of the amount to the appropriate operating revenue or expense account when the transaction settles.[37] They believe that changes in the fair value that will be included in rates should be initially recorded in the appropriate operating revenue or expense account, so reclassification is not necessary. Others support a position that in situations where it is probable that realized gains and losses would be included in rates, then unrealized changes in fair value of the related derivative instrument should be deferred in an appropriate regulatory asset or regulatory liability account.

53. After reviewing the comments, the Commission is of the view that entities will avail themselves of the special accounting afforded derivative instruments when these instruments are entered into as part of a cash flow or fair value hedge transaction. Under the special accounting afforded qualifying hedges, any unrealized gains and losses effectively remain on the balance sheet and therefore do not enter into the determination of net income until the hedged item enters into the determination of net income. If the derivative instrument is not part of qualifying hedge, entities will record the unrealized, as well as realized, gains or losses in accounts 421 and 426.5 as appropriate. However, if the derivative instrument does not qualify for hedge accounting, but it is probable under the requirements of Order 552 that changes in the fair value of the derivative instrument will be used in the development of rates, the entity must follow the Commission's existing accounting regulations for the recognition of regulatory assets and regulatory liabilities.

c. Inclusion of the Normal Purchases and Sales Scope Exception

54. The Commission noted in the NOPR that certain types of contracts are exempted from the requirements of FAS 133. For example, normal purchases and normal sales contracts that provided for the purchase or sale of goods that will be delivered in quantities expected to be used or sold by the reporting entity over a reasonable period in the normal course of business are not treated as derivative instruments. This exception is commonly referred to as the normal purchases and normal sales scope exception. The exception would include typical purchases and sales of inventory items, certain insurance contracts, and employee compensation agreements, and certain electric power contracts.

55. Some commenters noted that the normal purchases and sales exception should also be specifically included in the Commission's regulations.[38] They indicate that most forward power and electric option contracts will meet the normal purchase and sales scope exception and therefore changes in the contracts' fair value will not be required to be reflected on the financial statements. The Commission agrees with the commenters that some electric power contracts will meet this exception and therefore changes in the fair value of those contracts will not be reflected in the financial statements.

56. It is the Commission's view that the existing normal purchases and sales accounting exception criteria should also be applied to transactions that jurisdictional entities account and report to the Commission in the FERC Forms 1, 1–F, 2, 2–A, and 6. The Commission will therefore include language in the General Instructions for the Accounting for Derivative Instruments and Hedging Activities that provides for the normal purchases and sales exceptions.[39]

F. Changes to the FERC Annual Report Forms

57. The accounting changes proposed in the NOPR would require one new schedule and changes to existing balance sheet schedules in the FERC Forms 1, 1–F, 2, 2–A, and 6 filed with the Commission by public utilities and licensees, natural gas companies, and oil pipeline companies. The proposed new schedule was shown in appendix A of the NOPR.

58. As stated in the NOPR, in order to provide consistent accounting and reporting of items of other comprehensive income the Commission proposed to add a new schedule with instructions on the proper footnote disclosures for the FERC Forms 1, 1–F, 2, 2–A, and 6. The proposed new schedule would show the components of other comprehensive income and required:

59. The reporting of categories of other comprehensive income on a net-of-tax basis, where appropriate, along with the reporting of the related tax effects allocated to each component, in a footnote to the schedule.

60. The reporting of accumulated other comprehensive income balances at year end by category, in a footnote to the schedule.

61. The reporting of fair value hedge balances at year end by category, in a footnote to the schedule.

62. Some commenters recommended format changes to the proposed new schedule to better display the items of other comprehensive income. A roll-forward format was recommended that would show the current years activity, in addition to the cumulative balances for items of other comprehensive income.[40] The revised format would display all of the information proposed in the NOPR without the use of reporting accumulated balances for certain items through the use of footnotes.

63. The Commission notes that the roll-forward format recommendation made by the commenters will improve the transparency of the data displayed and reduce the need for certain year end balances to be reported in a footnote. The Commission will adopt the roll-forward format that will display amounts of other comprehensive income during the current period as well as at the balance sheet date. The new schedule for reporting derivative information and other comprehensive income amounts is shown in appendix B entitled Statement of Accumulated Comprehensive Income and Hedging Activities.

G. Disclosure Requirements

64. For many years financial statements issued to the public have required the inclusion of a disclosure entitled ''Management's Discussion and Analysis of Financial Condition and Results of Operations'' commonly referred to as the MD&A. It requires a discussion of liquidity, capital resources, results of operations and other information necessary to understand the financial condition, changes in financial condition and results of operations of the entity.

65. On January 22, 2002, the U.S. Securities and Exchange Commission

[37] *See* for example, Cinergy at p. 5, Southern at p. 3, and Pinnacle at p. 4.

[38] For example *see* Cinergy at p. 3, Wisconsin Electric at p. 6, and EEI at p. 6.

[39] *See* FAS 133 as amended by FAS 138, Derivatives Implementation Group (DIG) conclusions, and the Emerging Issues Task Force (EITF) pronouncements. These accounting pronouncements may be obtained from FASB at (*http://accounting.rutgers.edu/raw/fasb/*).

[40] *See* for example, Dominion at p. 14, Southern at p. 2, and EEI's April 1, 2002, supplement to its March 11, 2002 filing.

(SEC) issued a statement entitled *Commission Statement About Management's Discussion and Analysis of Financial Condition and Results of Operations.*[41] This statement set forth certain views of the SEC regarding disclosure that should be considered by registrants that address matters of liquidity and capital resources including off-balance sheet arrangements; certain trading activities that include non-exchange traded contracts accounted for at fair value; and effects of transactions with related and certain other parties. The SEC's interpretative guidance related to the MD&A did not create new legal requirements, but suggested steps that issuers of financial statements should consider in meeting their current disclosure obligations with respect to the matters described above.

66. In particular the SEC's interpretative guidance recommended certain disclosures about trading activities that include non-exchange traded contracts accounted for at fair value. The recommended disclosures include information concerning realized and unrealized changes in fair value of commodity contracts including derivatives, the source of the fair value price, and the fair value of the contracts at various maturity dates.

67. The Commission recognizes that there have been some concerns raised about how the fair value of derivative instruments have been determined. The information provided by entities in their MD&A will provide additional insight to regulators, investors, creditors, and other users of the financial statements into the valuation techniques and assumptions used to value the outstanding contracts as of the balance sheet date.

68. The Commission is of the view that the type of information disclosed by jurisdictional entities in their MD&A related to trading activities involving material commodity contracts that are accounted for at fair value is an important part of understanding the financial condition of entities that report financial information to the Commission in FERC Forms 1, 1–F, 2, 2–A, and 6. Therefore to the extent that a jurisdictional entity filing a FERC Form 1, 1–F, 2, 2–A, or 6 includes the above type of information on trading activities in its MD&A as part of its Annual Report to Shareholders and SEC filing, it must report the same information reported to the Commission on the schedule entitled Important Changes During the Year.[42] The instructions on this schedule require important information that appears in their Annual Reports to Shareholders and the SEC to also be included on this schedule. By including the derivative information presented in the MD&A to the FERC, the quality of the information received by this Commission will be no less than that provided by jurisdictional entities to shareholders and other users of the financial data.

69. The Commission notes that power marketers and power producers that file financial information with the SEC will also be subject to its recent interpretative guidance regarding additional disclosures concerning their trading activities. The SEC's information reporting initiatives may impact the Commission's need to require further reporting from these entities.

H. Miscellaneous Items

70. One commenter recommended that the Commission state it will not incorporate derivative instruments, hedging activities, and other comprehensive income into its ratemaking process for utilities, because the value of these instruments are certain to change over time and the Commission would set rates incorrectly.[43]

71. As stated in the NOPR, the proposed rule was not intended to prescribe the ratemaking treatment for items of other comprehensive income or for derivative instruments and hedging activities. The adoption of any particular rate treatment for these amounts is beyond the scope of this rulemaking. The Commission will decide the appropriate treatment, for these transactions on a case-by-case basis in individual rate proceedings.

72. Some commenters recommended that the Commission delay the effective date of the proposed changes for one year after the rulemaking is approved in order to allow for a complete review of the regulations and their prospective implementation.[44] One commenter indicated that the Commission's consideration of this accounting is premature at this time and delay its review and implementation until various regulatory bodies review current accounting procedures or until any reforms are adopted.[45] However, another commenter requested that the Commission make the proposed filing requirements retroactive and effective for 2001 reporting by requiring supplements to the Commission's Annual Report filings with the new schedules required under the proposed rule.[46]

73. The Commission is of the view that jurisdictional entities are already familiar with the accounting pronouncements contained in this final rule and have already implemented these requirements in their Annual Reports to Shareholders and in filings with the SEC. By delaying proper implementation of these new accounting and reporting standards, different and inconsistent sets of financial information would be reported to the Commission, and accounting and reporting guidance would continue to be required on how these transactions should be reported to FERC. Consequently, it is the Commission's view that little, if any, benefit would be gained by delaying the issuance of accounting and reporting guidance on these matters. In order to provide consistent accounting and reporting to the Commission on a timely basis, the Commission declines to postpone implementation for another year. The accounting and reporting changes will become effective 60 days after date of publication in the **Federal Register**.

74. The Commission acknowledges that with any new accounting and financial reporting standard, implementation issues may arise. Jurisdictional entities can seek clarification from the Chief Accountant concerning the proper application or implementation of any accounting standard under the Commission's existing regulations.

75. Finally, the Chief Accountant had previously issued guidance concerning the proper accounting for derivative and hedging activities pending further action by the Commission. That guidance letter provided for the recording of derivative assets and liabilities in miscellaneous deferred debit or credit accounts, or in other investment accounts, based upon the jurisdictional entities rationale for entering into the derivative transaction. In order to provide for consistent accounting and reporting treatment for all derivative transactions, the Commission will require that amounts previously accounted for under the Chief Accountant's guidance letter using existing asset, liability and equity accounts, be reclassified to the appropriate new derivative assets, derivative liabilities, and accumulated other comprehensive income account, established under this Final Rule.

[41] *See* SEC release nos. 34–45321; FR–61. This notice may be obtained from the SEC website at (*http://www.sec.gov/rules/other/33–8056.htm*)

[42] *See* FERC Form No. 1 p. 108, FERC Form No. 2 p. 108, and FERC Form No. 6 p. 108.

[43] *See* Sempra at p. 6.

[44] *See* EEI at p. 13, and Dominion at p. 15.

[45] *See* Wisconsin Electric at p. 4 and 5.

[46] *See* APGA at p. 3.

IV. Regulatory Flexibility Act Certification

76. The Commission finds that most filing entities regulated by the Commission do not fall within the Regulatory Flexibility Act's definition of small entity.[47] This final rule will promote consistent reporting practices for all reporting companies and would not be a significant burden to industry since the information is already being captured by their accounting systems and generally being reported to shareholders and others at a company, or at a consolidated business level. However, if the reporting requirements represent an undue burden on small businesses, the entity affected may seek a waiver of the disclosure requirements from the Commission. Accordingly, the Commission certifies that this Final Rule will not have a significant economic impact on a substantial number of small entities.

V. Environmental Impact Statement

77. Commission regulations require that an environmental assessment or an environmental impact statement be prepared for any Commission action that may have a significant adverse effect on the human environment.[48] No environmental consideration is necessary for the promulgation of a rule that is clarifying, corrective, or procedural or does not substantially change the effect of legislation or regulations being amended,[49] and also for information gathering, analysis, and dissemination.[50] The proposed rule updates the parts 101, 201 and 352 of the Commission's regulations, and does not substantially change the effect of the underlying legislation or the regulations being revised or eliminated. In addition, the final rule involves information gathering, analysis and dissemination. Therefore, this final rule falls within categorical exemptions provided in the Commission's Regulations. Consequently, neither an environmental impact statement nor an environmental assessment is required.

VI. Information Collection Statement

78. The Office of Management and Budget (OMB) regulations require that OMB approve certain reporting and record keeping (collections of information) imposed by an agency. The information collection requirements in this final rule are contained in the following Annual Reports: FERC Form No. 1, Annual Report of Major Public Utilities, Licensees and Others (Form 1); FERC Form No. 1–F, Annual Report of Nonmajor Public Utilities and Licensees (Form 1–F); FERC Form No. 2, Annual Report of Major Natural Gas Companies (Form 2); FERC Form No. 2–A, Annual Report of Nonmajor Natural Gas Companies (Form 2–A); and Form No. 6, Annual Report of Oil Pipeline Companies (Form 6). Form 1 most recently received OMB approval on March 29, 2002, for the period through March 2005. Form 1–F received OMB approval on April 2, 2002, for the period through April 2005. Form 2 received approval on March 29, 2002, for the period through March 2005. Form 2–A received approval on April 2, 2002, for the period through April 2005. Form 6 was previously approved March 28, 2001 for the period through March 2004. OMB declined to take any action at the NOPR stage instead deciding to make a determination at the final rule stage.

79. Interested persons may obtain information on the reporting requirements by contacting the Federal Energy Regulatory Commission, 888 First Street, NE., Washington, DC 20426 (Attention: Michael Miller, Office of the Chief Information Officer, (202) 502–8415) or from the Office of Management and Budget, Room 10202 NEOB, Washington, DC 20503 (Attention: Desk Officer for the Federal Energy Regulatory Commission, (202) 395–7318, fax: (202) 395–7285).

80. The regulated entity shall not be penalized for failure to respond to this collection of information unless the collection of information displays a valid OMB control number.

81. *Titles:* FERC Form No. 1, ''Annual Report of Major Public Utilities, Licensees and Others''; FERC Form No. 1–F, ''Annual Report of Nonmajor Public Utilities and Licensees''; FERC Form No. 2, ''Annual Report of Major Natural Gas Companies''; FERC Form No. 2–A, ''Annual Report of Nonmajor Natural Gas Companies''; and Form No. 6, ''Annual Report of Oil Pipeline Companies.''

82. *Action:* Revision of Currently Approved Collections of Information.

83. *OMB Control Nos.:* 1902–0021; 1902–0029; 1902–0028; 1902–0030; and 1902–0022.

84. *Respondents:* Business or other for profit.

85. *Frequency of Responses:* Annually.

86. *Reporting Burden:* The Commission estimated that adoption of the reporting requirements as identified in the NOPR, would result in an increase in reporting burden to the information collections identified above. Those increases were the following:

Data collection	Hours per respondent	Total hours for data coll.*	
		NOPR	Final rule
Form—1	2	420	432
Form—1–F	2	14	52
Form—2	2	114	114
Form–2–A	2	114	106
Form—6	2	318	318
Totals		980	1,022

*The changes in total hours reflect changes in the number of respondents filing the information collections based on the most recent submissions to the Commission. Forms 1 & 1–F had increases in the number of respondents filing while Form 2–A had a decrease in the number of respondents who filed. The Commission did not receive specific comments concerning its burden estimates and will therefore continue those estimates in the final rule. Comments on the substantive issues raised in the NOPR are addressed elsewhere in the final rule.

87. Interested persons may obtain information on the reporting requirements by contacting the following: Federal Energy Regulatory Commission, 888 First Street, NE., Washington, DC 20426. Attention:

[47] 5 U.S.C. 601(3), citing to section 3 of the Small Business Act, 15 U.S.C. 632. Section 3 of the Small Business Act defines a ''small-business concern'' as a business which is independently owned and operated and which is not dominate in its field of operation.

[48] Regulations Implementing National Environmental Policy Act, 52 FR 47897 (December 17, 1987), FERC Stats. & Regs. 30,783 (1987).

[49] 18 CFR 380.4(a)(2)(ii).

[50] 18 CFR 380.4(a)(5).

Michael Miller, Office of the Chief Information Officer, Phone: (202) 502–8415, fax: (202) 208–2425, e-mail: *mike.miller@ferc.gov.*

88. For submitting comments concerning the collections of information and the associated burden estimate(s), please send your comments to the contact listed above or to the Office of Management and Budget, Office of Information and Regulatory Affairs, 725 17th Street, NW., Washington, DC 20503 (Attention: Desk Officer for the Federal Energy Regulatory Commission, phone (202) 395–7856, fax: (202) 395–7285).

VII. Document Availability

89. In addition to publishing the full text of this document in the **Federal Register**, the Commission also provides all interested persons an opportunity to view and/or print the contents of this document via the Internet through FERC's Home Page (*http://www.ferc.gov/*) and in FERC's Public Reference Room during normal business hours (8:30 a.m. to 5 p.m. Eastern time) at 888 First Street, NE., Room 2A, Washington, DC 20426.

90. From FERC's Home Page on the Internet, this information is available in the Federal Energy Regulatory Records Information System (FERRIS). The full text of this document is available on FERRIS in PDF and WordPerfect format for viewing, printing, and/or downloading. To access this document in FERRIS, type the docket number excluding the last three digits of this document in the docket number field.

91. User assistance is available for FERRIS and the FERC website during normal business hours from our Help line at (202) 502–8222 or the Public Reference Room at (202) 502–8371 Press 0, TTY (202) 502–8659. E-mail the Public Reference Room at *public.referenceroom@ferc.gov.*

VIII. Effective Date and Congressional Notification

92. This Final Rule will take effect January 6, 2003. The Commission has determined, with the concurrence of the Administrator of the Office of Information and Regulatory Affairs of the Office of Management and Budget, that this rule is not a ''major rule'' within the meaning of section 251 of the Small Business Regulatory Enforcement Fairness Act of 1996.[51] The Commission will submit the final rule to both houses of Congress and the General Accounting Office.[52]

[51] 5 U.S.C. 804(2).

[52] 5 U.S.C. 801(a)(1)(A).

List of Subjects

18 CFR Part 101

Electric power, Electric utilities, Reporting and recordkeeping requirements, Uniform System of Accounts.

18 CFR Part 201

Natural gas, Reporting and recordkeeping requirements, Uniform System of Accounts.

18 CFR Part 352

Pipelines, Reporting and recordkeeping requirements, Uniform System of Accounts.

By the Commission.

Linwood A. Watson, Jr.,

Deputy Secretary.

In consideration of the foregoing, the Commission amends Parts 101, 201, and 352, Title 18 of the Code of Federal Regulations, as follows:

PART 101—UNIFORM SYSTEM OF ACCOUNTS PRESCRIBED FOR PUBLIC UTILITIES AND LICENSEES SUBJECT TO THE PROVISIONS OF THE FEDERAL POWER ACT

1. The authority citation for part 101 continues to read as follows:

Authority: 16 U.S.C. 791a–825r, 2601–2645; 31 U.S.C. 9701; 42 U.S.C. 7101–7352, 7651–7651o.

2. Amend part 101 as follows:

a. In General Instructions, section 21. Allowances, paragraph I is removed, and section 23. Accounting for other comprehensive income, and 24. Accounting for derivative instruments and hedging activities, are added to read as follows:

General Instructions

* * * * *

23. *Accounting for other comprehensive income.*

A. Utilities shall record items of other comprehensive income in account 219, Accumulated other comprehensive income. Amounts included in this account shall be maintained by each category of other comprehensive income. Examples of categories of other comprehensive income include, foreign currency items, minimum pension liability adjustments, unrealized gains and losses on available-for-sale type securities and cash flow hedge amounts. Supporting records shall be maintained for account 219 so that the company can readily identify the cumulative amount of other comprehensive income for each item included in this account.

B. When an item of other comprehensive income enters into the determination of net income in the current or subsequent periods, a reclassification adjustment shall be recorded in account 219 to avoid double counting of that amount.

C. When it is probable that an item of other comprehensive income will be included in the development of cost-of-service rates in subsequent periods, that amount of unrealized losses or gains will be recorded in Accounts 182.3 or 254 as appropriate.

24. *Accounting for derivative instruments and hedging activities.*

A. Utilities shall recognize derivative instruments as either assets or liabilities in the financial statements and measure those instruments at fair value, except those falling within recognized exceptions. Normal purchases or sales are contracts that provide for the purchase or sale of goods that will be delivered in quantities expected to be used or sold by the utility over a reasonable period in the normal course of business. A derivative instrument is a financial instrument or other contract with all of the following characteristics:

1. It has one or more underlyings and a notional amount or payment provision. Those terms determine the amount of the settlement or settlements, and, in some cases, whether or not a settlement is required.

2. It requires no initial net investment or an initial net investment that is smaller than would be required for other types of contracts that would be expected to have a similar response to changes in market factors.

3. Its terms require or permit net settlement, can readily be settled net by a means outside the contract, or provides for delivery of an asset that puts the recipient in a position not substantially different from net settlement.

B. The accounting for the changes in the fair value of derivative instruments depends upon its intended use and designation. Changes in the fair value of derivative instruments not designated as fair value or cash flow hedges shall be recorded in account 175, derivative instrument assets, or account 244, derivative instrument liabilities, as appropriate, with the gains recorded in account 421, miscellaneous nonoperating income, and losses recorded in account 426.5, other deductions.

C. A derivative instrument may be specifically designated as a fair value or cash flow hedge. A hedge is used to manage risk to price, interest rates, or foreign currency transactions. A company shall maintain documentation of the hedge relationship at the inception of the hedge that details the

risk management objective and strategy for undertaking the hedge, the nature of the risk being hedged, and how hedge effectiveness will be determined.

D. If the utility designates the derivative instrument as a fair value hedge against exposure to changes in the fair value of a recognized asset, liability, or a firm commitment, it shall record the change in fair value of the derivative instrument to account 176, derivative instrument assets-hedges, or account 245, derivative instrument liabilities-hedges, as appropriate, with a corresponding adjustment to the subaccount of the item being hedged. The ineffective portion of the hedge transaction shall be reflected in the same income or expense account that will be used when the hedged item enters into the determination of net income. In the case of a fair value hedge of a firm commitment a new asset or liability is created. As a result of the hedge relationship, the new asset or liability will become part of the carrying amount of the item being hedged.

E. If the utility designates the derivative instrument as a cash flow hedge against exposure to variable cash flows of a probable forecasted transaction, it shall record changes in the fair value of the derivative instrument in account 176, derivative instrument assets-hedges, or account 245, derivative instrument liabilities-hedges, as appropriate, with a corresponding amount in account 219, accumulated other comprehensive income, for the effective portion of the hedge. The ineffective portion of the hedge transaction shall be reflected in the same income or expense account that will be used when the hedged item enters into the determination of net income. Amounts recorded in other comprehensive income shall be reclassified into earnings in the same period or periods that the hedged forecasted item enters into the determination of net income.

b. In Balance Sheet Accounts, accounts 124, paragraph A, 125, 126 and 127 are revised to read as follows:

Balance Sheet Accounts

* * * * *

124 *Other investments.*

A. This account shall include the book cost of investments in securities issued or assumed by nonassociated companies, investment advances to such companies, and any investments not accounted for elsewhere. This account shall also include unrealized holding gains and losses on trading and available-for-sale types of security investments. Include also the offsetting entry to the recording of amortization of discount or premium on interest bearing investments. (*See* account 419, interest and dividend income.)

* * * * *

125 *Sinking funds (Major only).*

This account shall include the amount of cash and book cost of investments held in sinking funds. This account shall also include unrealized holding gains and losses on trading and available-for-sale types of security investments. A separate account, with appropriate title, shall be kept for each sinking fund. Transfers from this account to special deposit accounts may be made as necessary for the purpose of paying matured sinking-fund obligations, or obligations called for redemption but not presented, or the interest thereon.

126 *Depreciation fund (Major only).*

This account shall include the amount of cash and book cost of investments which have been segregated in a special fund for the purpose of identifying such assets with the accumulated provisions for depreciation. This account shall also include unrealized holding gains and losses on trading and available-for-sale types of security investments.

127 *Amortization fund—Federal (Major only).*

This account shall include the amount of cash and book cost of investments of any investments of any fund maintained pursuant to the requirements of a federal regulatory body, as the cash and investments segregated for the purpose of identifying the specific assets associated with account 215.1, appropriated retained earnings—amortization reserve, federal. This account shall also include unrealized holding gains and losses on trading and available-for-sale types of security investments.

* * * * *

c. In Balance Sheet Accounts, account 128, introductory text above the note is revised to read as follows:

Balance Sheet Accounts

* * * * *

128 Other *special funds (Major only).*

This account shall include the amount of cash and book cost of investments which have been segregated in special funds for insurance, employee pensions, savings, relief, hospital, and other purposes not provided for elsewhere. This account shall also include unrealized holding gains and losses on trading and available-for-sale types of security investments. A separate account with appropriate title, shall be kept for each fund.

* * * * *

d. In Balance Sheet Accounts, account 129, introductory text preceding Note A, is revised to read as follows:

Balance Sheet Accounts

* * * * *

129 *Special funds (Nonmajor only).*

This account shall include the amount of cash and book cost of investments which have been segregated in special funds for bond retirements, property additions and replacements, insurance, employees' pensions, savings, relief, hospital, and other purposes not provided for elsewhere. This account shall also include unrealized holding gains and losses on trading and available-for-sale types of security investments. A separate account, with appropriate title, shall be kept for each fund.

* * * * *

e. In Balance Sheet Accounts, accounts 175 and 176 are added to read as follows:

Balance Sheet Accounts

* * * * *

175 *Derivative instrument assets.*

This account shall include the amounts paid for derivative instruments, and the change in the fair value of all derivative instrument assets not designated as cash flow or fair value hedges. Account 421, miscellaneous nonoperating income, shall be credited or debited, as appropriate, with the corresponding amount of the change in the fair value of the derivative instrument.

176 *Derivative instrument assets—Hedges.*

A. This account shall include the amounts paid for derivative instruments, and the change in the fair value of derivative instrument assets designated by the utility as cash flow or fair value hedges.

B. When a utility designates a derivative instrument asset as a cash flow hedge it will record the change in the fair value of the derivative instrument in this account with a concurrent charge to account 219, accumulated other comprehensive income, with the effective portion of the gain or loss. The ineffective portion of the cash flow hedge shall be charged to the same income or expense account that will be used when the hedged item enters into the determination of net income.

C. When a utility designates a derivative instrument as a fair value hedge it shall record the change in the fair value of the derivative instrument in this account with a concurrent charge to a subaccount of the asset or liability that carries the item being hedged. The

ineffective portion of the fair value hedge shall be charged to the same income or expense account that will be used when the hedged item enters into the determination of net income.

* * * * *

f. In Balance Sheet Accounts, account 182.3, paragraph B is revised to read as follows:

Balance Sheet Accounts

* * * * *

182.3 *Other regulatory assets.*

* * * * *

B. The amounts included in this account are to be established by those charges which would have been included in net income, or accumulated other comprehensive income, determinations in the current period under the general requirements of the Uniform System of Accounts but for it being probable that such items will be included in a different period(s) for purposes of developing rates that the utility is authorized to charge for its utility services. When specific identification of the particular source of a regulatory asset cannot be made, such as in plant phase-ins, rate moderation plans, or rate levelization plans, account 407.4, regulatory credits, shall be credited. The amounts recorded in this account are generally to be charged, concurrently with the recovery of the amounts in rates, to the same account that would have been charged if included in income when incurred, except all regulatory assets established through the use of account 407.4 shall be charged to account 407.3, regulatory debits, concurrent with the recovery in rates.

* * * * *

g. In Balance Sheet Accounts, accounts 219, 244 and 245 are added to read as follows:

Balance Sheet Accounts

* * * * *

219 *Accumulated other comprehensive income.*

A. This account shall include revenues, expenses, gains, and losses that are properly includable in other comprehensive income during the period. Examples of other comprehensive income include foreign currency items, minimum pension liability adjustments, unrealized gains and losses on certain investments in debt and equity securities, and cash flow hedges. Records supporting the entries to this account shall be maintained so that the utility can furnish the amount of other comprehensive income for each item included in this account.

B. This account shall also be debited or credited, as appropriate, with amounts of accumulated other comprehensive income that have been included in the determination of net income during the period and in accumulated other comprehensive income in prior periods. Separate records for each category of items shall be maintained to identify the amount of the reclassification adjustments from accumulated other comprehensive income to earnings made during the period.

* * * * *

244 *Derivative instrument liabilities.*

This account shall include the change in the fair value of all derivative instrument liabilities not designated as cash flow or fair value hedges. Account 426, other deductions, shall be debited or credited as appropriate with the corresponding amount of the change in the fair value of the derivative instrument.

245 *Derivative instrument liabilities-Hedges.*

A. This account shall include the change in the fair value of derivative instrument liabilities designated by the utility as cash flow or fair value hedges.

B. A utility shall record the change in the fair value of a derivative instrument liability related to a cash flow hedge in this account, with a concurrent charge to account 219, accumulated other comprehensive income, with the effective portion of the derivative's gain or loss. The ineffective portion of the cash flow hedge shall be charged to the same income or expense account that will be used when the hedged item enters into the determination of net income.

C. A utility shall record the change in the fair value of a derivative instrument liability related to a fair value hedge in this account, with a concurrent charge to a subaccount of the asset or liability that carries the item being hedged. The ineffective portion of the fair value hedge shall be charged to the same income or expense account that will be used when the hedged item enters into the determination of net income.

* * * * *

h. In Balance Sheet Accounts, account 254, paragraph B, is revised to read as follows:

Balance Sheet Accounts

* * * * *

254 *Other regulatory liabilities.*

* * * * *

B. The amounts included in this account are to be established by those credits which would have been included in net income, or accumulated other comprehensive income, determinations in the current period under the general requirements of the Uniform System of Accounts but for it being probable that: Such items will be included in a different period(s) for purposes of developing the rates that the utility is authorized to charge for its utility services; or refunds to customers, not provided for in other accounts, will be required. When specific identification of the particular source of the regulatory liability cannot be made or when the liability arises from revenues collected pursuant to tariffs on file at a regulatory agency, account 407.3, regulatory debits, shall be debited. The amounts recorded in this account generally are to be credited to the same account that would have been credited if included in income when earned except: All regulatory liabilities established through the use of account 407.3 shall be credited to account 407.4, regulatory credits; and in the case of refunds, a cash account or other appropriate account should be credited when the obligation is satisfied.

* * * * *

PART 201—UNIFORM SYSTEM OF ACCOUNTS PRESCRIBED FOR NATURAL GAS COMPANIES SUBJECT TO THE PROVISIONS OF THE NATURAL GAS ACT

3. The authority citation for part 201 continues to read as follows:

Authority: 15 U.S.C. 717–717w, 3301–3432; 42 U.S.C. 7101–7352, 7651–7651o.

4. Amend part 201 as follows:

a. In General Instructions, sections 22, accounting for other comprehensive income, and 23, accounting for derivative instruments and hedging activities, are added to read as follows:

General Instructions

* * * * *

22. *Accounting for other comprehensive income.*

A. Utilities shall record items of other comprehensive income in account 219, accumulated other comprehensive income. Amounts included in this account shall be maintained by each category of other comprehensive income. Examples of categories of other comprehensive income include, foreign currency items, minimum pension liability adjustments, unrealized gains and losses on available-for-sale type securities and cash flow hedge amounts. Supporting records shall be maintained for account 219 so that the company can readily identify the cumulative amount of other comprehensive income for each item included in this account.

B. When an item of other comprehensive income enters into the determination of net income in the current or subsequent periods, a reclassification adjustment shall be recorded in account 219 to avoid double counting of that amount.

C. When it is probable that an item of other comprehensive income will be included in the development of cost of service rates in subsequent periods, that amount of unrealized losses or gains shall be recorded in accounts 182.3 or 254 as appropriate.

23. *Accounting for derivative instruments and hedging activities.*

A. Utilities shall recognize derivative instruments as either assets or liabilities in the financial statements and measure those instruments at fair value, except those falling within recognized exceptions, the most common of which being the normal purchases and sales scope exception. Normal purchases or sales are contracts that provide for the purchase or sale of goods that will be delivered in quantities expected to be used or sold by the utility over a reasonable period in the normal course of business. A derivative instrument is a financial instrument or other contract with all three of the following characteristics:

(1) It has one or more underlyings and a notional amount or payment provision. Those terms determine the amount of the settlement or settlements, and, in some cases, whether or not a settlement is required.

(2) It requires no initial net investment or an initial net investment that is smaller than would be required for other types of contracts that would be expected to have similar response to changes in market factors.

(3) Its terms require or permit net settlement, can readily be settled net by a means outside the contract, or provides for delivery of an asset that puts the recipient in a position not substantially different from net settlement.

B. The accounting for the changes in the fair value of derivative instruments depends upon its intended use and designation. Changes in the fair value of derivative instruments not designated as fair value or cash flow hedges will be recorded in account 175, derivative instrument assets, or account 244, derivative instrument liabilities, as appropriate, with the gains recorded in account 421, miscellaneous nonoperating income, and losses recorded in account 426.4, other deductions.

C. A derivative instrument may be specifically designated as a fair value or cash flow hedge. A hedge may be used to manage risk to price, interest rates, or foreign currency transactions. Utilities shall maintain documentation of the hedge relationship at the inception of the hedge that details the risk management objective and strategy for undertaking the hedge, the nature of the risk being hedged, and how hedge effectiveness will be determined.

D. If the utility designates the derivative instrument as a fair value hedge against exposure to changes in the fair value of a recognized asset, liability, or a firm commitment, it will record the change in fair value of the derivative instrument to account 176, derivative instrument assets—hedges, or account 245, derivative instrument liabilities—hedges, as appropriate, with a corresponding adjustment to the subaccount of the item being hedged. The ineffective portion of the hedge transaction shall be reflected in the same income or expense account that will be used when the hedged item enters into the determination of net income. In the case of a fair value hedge of a firm commitment a new asset or liability is created. As a result of the hedge relationship, the new asset or liability will become part of the carrying amount of the item being hedged.

E. If the utility designates the derivative instrument as a cash flow hedge against exposure to variable cash flows of a probable forecasted transaction, it shall record changes in the fair value of the derivative instrument in account 176, derivative instrument assets—hedges, or account 245, derivative instrument liabilities—hedges, as appropriate, with a corresponding amount in account 219, accumulated other comprehensive income, for the effective portion of the hedge. The ineffective portion of the hedge transaction shall be reflected in the same income or expense account that will be used when the hedged item enters into the determination of net income. Amounts recorded in other comprehensive income shall be reclassified into earnings in the same period or periods that the hedged forecasted item enters into the determination of net income.

* * * * *

b. In Balance Sheet Accounts, accounts 124, paragraph A, 125, 126, and 128, introductory text preceding the Note, are revised to read as follows:

Balance Sheet Accounts

* * * * *

124 *Other investments.*

A. This account shall include the book cost of investments in securities issued or assumed by nonassociated companies, investment advances to such companies, and any investments not accounted for elsewhere. This account shall also include unrealized holding gains and losses on trading and available-for-sale types of security investments. Include also the offsetting entry to the recording of amortization of discount or premium on interest bearing investments. (*See* account 419, interest and dividend income.)

* * * * *

125 *Sinking funds.*

This account shall include the amount of cash and book cost of investments held in sinking funds. This account shall also include unrealized holding gains and losses on trading and available-for-sale types of security investments. A separate account, with appropriate title, shall be kept for each sinking fund. Transfers from this account to special deposit accounts may be made as necessary for the purpose of paying matured sinking-fund obligations, or obligations called for redemption but not presented, or the interest thereon.

126 *Depreciation fund.*

This account shall include the amount of cash and book cost of investments which have been segregated in a special fund for the purpose of identifying such assets with the accumulated provisions for depreciation. This account shall also include unrealized holding gains and losses on trading and available-for-sale types of security investments.

* * * * *

128 *Other special funds.*

This account shall include the amount of cash and book cost of investments which have been segregated in special funds for insurance, employee pensions, savings, relief, hospital, and other purposes not provided for elsewhere. This account shall also include unrealized holding gains and losses on trading and available-for-sale types of security investments. A separate account with appropriate title, shall be kept for each fund.

* * * * *

c. In Balance Sheet Accounts, accounts 175 and 176 are added to read as follows:

Balance Sheet Accounts

* * * * *

175 *Derivative instrument assets.*

This account shall include the amounts paid for derivative instruments, and the change in the fair value of all derivative instrument assets not designated as cash flow or fair value hedges. Account 421, miscellaneous nonoperating income, will be credited or debited as appropriate with the

corresponding amount of the change in the fair value of the derivative instrument.

176 *Derivative instrument assets—Hedges.*

A. This account shall include the amounts paid for derivative instruments, and the change in the fair value of derivative instrument assets designated by the utility as cash flow or fair value hedges.

B. When a utility designates a derivative instrument asset as a cash flow hedge it will record the change in the fair value of the derivative instrument in this account with a concurrent charge to account 219, accumulated other comprehensive income, with the effective portion of the derivative gain or loss. The ineffective portion of the cash flow hedge shall be charged to the same income or expense account that will be used when the hedged item enters into the determination of net income.

C. When a utility designates a derivative instrument asset as a fair value hedge it shall record the change in the fair value of the derivative instrument in this account with a concurrent charge to a subaccount of the asset or liability that carries the item being hedged. The ineffective portion of the fair value hedge shall be charged to the same income or expense account that will be used when the hedged item enters into the determination of net income.

* * * * *

d. In Balance Sheet Accounts, account 182.3, paragraph B, is revised to read as follows:

Balance Sheet Accounts

* * * * *

182.3 *Other regulatory assets.*

* * * * *

B. The amounts included in this account are to be established by those charges which would have been included in net income, or accumulated other comprehensive income, determinations in the current period under the general requirements of the Uniform System of Accounts but for it being probable that such items will be included in a different period(s) for purposes of developing rates that the utility is authorized to charge for its utility services. When specific identification of the particular source of a regulatory asset cannot be made, such as in plant phase-ins, rate moderation plans, or rate levelization plans, account 407.4, regulatory credits, shall be credited. The amounts recorded in this account are generally to be charged, concurrently with the recovery of the amounts in rates, to the same account that would have been charged if included in income when incurred, except all regulatory assets established through the use of account 407.4 shall be charged to account 407.3, Regulatory debits, concurrent with the recovery in rates.

* * * * *

e. In Balance Sheet Accounts, accounts 219, 244 and 245 are added, to read as follows:

Balance Sheet Accounts

* * * * *

219 *Accumulated other comprehensive income.*

A. This account shall include revenues, expenses, gains, and losses that are properly includable in other comprehensive income during the period. Examples of other comprehensive income include foreign currency items, minimum pension liability adjustments, unrealized gains and losses on certain investments in debt and equity securities, and cash flow hedges. Records supporting the entries to this account shall be maintained so that the utility can furnish the amount of other comprehensive income for each item included in this account.

B. This account shall also be debited or credited, as appropriate, with amounts of accumulated other comprehensive income that have been included in the determination of net income during the period and in accumulated other comprehensive income in prior periods. Separate records for each category of items will be maintained to identify the amount of the reclassification adjustments from accumulated other comprehensive income to earnings made during the period.

* * * * *

244 *Derivative instrument liabilities.*

This account shall include the change in the fair value of all derivative instrument liabilities not designated as cash flow or fair value hedges. Account 426.5, other deductions, shall be debited or credited as appropriate with the corresponding amount of the change in the fair value of the derivative instrument.

245 *Derivative instrument liabilities—Hedges.*

A. This account shall include the change in the fair value of derivative instrument liabilities designated by the utility as cash flow or fair value hedges.

B. A utility shall record the change in the fair value of a derivative liability related to a cash flow hedge in this account, with a concurrent charge to account 219, accumulated other comprehensive income, with the effective portion of the derivative gain or loss. The ineffective portion of the cash flow hedge shall be charged to the same income or expense account that will be charged when the hedged item enters into the determination of net income.

C. A utility shall record the change in the fair value of a derivative instrument liability related to a fair value hedge in this account, with a concurrent charge to a subaccount of the asset or liability that carries the item being hedged. The ineffective portion of the fair value hedge shall be charged to the same income or expense account that will be charged when the hedged item enters into the determination of net income.

* * * * *

f. In Balance Sheet Accounts, account 254, paragraph B is revised, to read as follows:

Balance Sheet Accounts

* * * * *

254 *Other regulatory liabilities.*

* * * * *

B. The amounts included in this account are to be established by those credits which would have been included in net income, or accumulated other comprehensive income, determinations in the current period under the general requirements of the Uniform System of Accounts but for it being probable that: Such items will be included in a different period(s) for purposes of developing the rates that the utility is authorized to charge for its utility services; or refunds to customers, not provided for in other accounts, will be required. When specific identification of the particular source of the regulatory liability cannot be made or when the liability arises from revenues collected pursuant to tariffs on file at a regulatory agency, account 407.3, regulatory debits, shall be debited. The amounts recorded in this account generally are to be credited to the same account that would have been credited if included in income when earned except: All regulatory liabilities established through the use of account 407.3 shall be credited to account 407.4, regulatory credits; and in the case of refunds, a cash account or other appropriate account should be credited when the obligation is satisfied.

* * * * *

PART 352—UNIFORM SYSTEM OF ACCOUNTS PRESCRIBED FOR OIL PIPELINE COMPANIES SUBJECT TO THE PROVISIONS OF THE INTERSTATE COMMERCE ACT

5. The authority citation for part 352 continues to read as follows:

Authority: 49 U.S.C. 60502; 49 App. U.S.C. 1–85 (1988).

6. Amend part 352 as follows:

a. In List of Instructions and Accounts, definition, paragraph 35(d) is revised to read as follows:

Definitions.

35 * * *

(d) *Cost,* as applied to a marketable equity security, refers to the original cost as adjusted for unrealized holding gains and losses.

* * * * *

b. In General Instructions, paragraph 1–15(a), (b) and (c) are revised, (d) and (e) are removed, and General Instructions paragraphs 1–17 and 1–18 are added to read as follows:

General Instructions

* * * * *

1–15 *Accounting for marketable securities owned.*

(a) Accounts 11 ''Temporary investments,'' 20 ''Investments in affiliated companies,'' and 21 ''Other investments'' shall be maintained in such a manner as to reflect the marketable equity portion (*see* definition 35) and other securities or investments.

(b) For the purpose of determining net ledger value, the marketable equity securities in account 11 shall be considered the current portfolio and the marketable equity securities in accounts 20 and 21 (combined) shall be considered the noncurrent portfolio.

(c) Carriers will categorize their security investments as held-to-maturity, trading, or available-for-sale. Unrealized holding gains and losses on trading type investment securities will be recorded in accounts 640, miscellaneous income, and 660, miscellaneous income charges, as appropriate. Unrealized holding gains and losses on available-for-sale type investment securities shall be recorded in account 77, accumulated other comprehensive income.

* * * * *

1–17 *Accounting for other comprehensive income.*

(a) Carriers shall record items of other comprehensive income in account 77, accumulated other comprehensive income. Amounts included in this account shall be maintained by each category of other comprehensive income. Examples of categories of other comprehensive income include, foreign currency items, minimum pension liability adjustments, unrealized gains and losses on available-for-sale type securities and cash flow hedge amounts. Supporting records shall be maintained for account 77 so that the company can readily identify the cumulative amount of other comprehensive income for each item included in this account.

(b) When an item of other comprehensive income enters into the determination of net income in the current or subsequent periods, a reclassification adjustment shall be recorded in account 77 to avoid double counting of that amount.

1–18 *Accounting for derivative instruments and hedging activities.*

(a) A carrier shall recognize derivative instruments as either assets or liabilities in the financial statements and measure those instruments at fair value, except those falling within recognized exceptions, the most common of which being the normal purchases and sales scope exception. Normal purchases or sales are contracts that provide for the purchase or sale of goods that will be delivered in quantities expected to be used or sold by the utility over a reasonable period in the normal course of business. A derivative instrument is a financial instrument or other contract with all three of the following characteristics:

(1) It has one or more underlyings and a notional amount or payment provision. Those terms determine the amount of the settlement or settlements, and, in some cases, whether or not a settlement is required.

(2) It requires no initial net investment or an initial net investment that is smaller than would be required for other types of contracts that would be expected to have similar response to changes in market factors.

(3) Its terms require or permit net settlement, can readily be settled net by a means outside the contract, or provides for delivery of an asset that puts the recipient in a position not substantially different from net settlement.

(b) The accounting for the changes in the fair value of derivative instruments depends upon its intended use and designation. Changes in the fair value of derivative instruments not designated as fair value or cash flow hedges shall be recorded in account 46, derivative instrument assets, or account 65, derivative instrument liabilities, as appropriate, with the gains recorded in account 640, miscellaneous income, and losses recorded in account 660, miscellaneous income charges.

(c) A derivative instrument may be specifically designated as a fair value or cash flow hedge. A hedge may be used to manage risk to price, interest rates, or foreign currency transactions. An entity shall maintain documentation of the hedge relationship at the inception of the hedge that details the risk management objective and strategy for undertaking the hedge, the nature of the risk being hedged, and how hedge effectiveness will be determined.

(d) If the carrier designates the derivative instrument as a fair value hedge against exposure to changes in the fair value of a recognized asset, liability, or a firm commitment, it shall record the change in fair value of the derivative instrument designated as a fair value hedge to account 47, derivative instrument assets-hedges, or account 66, derivative instrument liabilities-hedges, as appropriate, with a corresponding adjustment to the subaccount of the item being hedged. The ineffective portion of the hedge transaction shall be reflected in the same income or expense account that will be used when the hedged item enters into the determination of net income. In the case of a fair value hedge of a firm commitment, a new asset or liability is created. As a result of the hedge relationship, the new asset or liability will become part of the carrying amount of the item being hedged.

(e) If the carrier designates the derivative instrument as a cash flow hedge against exposure to variable cash flows of a probable forecasted transaction, it shall record changes in the fair value of the derivative instrument in account 47, derivative instrument assets-hedges, or account 66, derivative instrument liabilities-hedges, as appropriate, with a corresponding amount in account 77, accumulated other comprehensive income, for the effective portion of the hedge. The ineffective portion of the hedge transaction shall be reflected in the same income or expense account that will be used when the hedged item enters into the determination of net income. Amounts recorded in other comprehensive income shall be reclassified into earnings in the same period or periods that the hedged forecasted item enters into the determination of net income.

* * * * *

c. In Balance Sheet Accounts, accounts 11, 21, and 22, paragraph (a) are revised to read as follows:

Balance Sheet Accounts

* * * * *

11 *Temporary investments.*

(a) This account shall include the cost of securities and other collectible obligations acquired for the purpose of temporarily investing cash, such as United States Treasury certificates, marketable securities, time drafts receivable, demand loans, time deposits with banks and trust companies, and other similar investments of a temporary character. This account shall also include unrealized holding gains and losses on trading and available-for-sale types of security investments.

(b) This account shall be subdivided to reflect the marketable equity securities' portion and other temporary investments. (*See* Instruction 1–15).

* * * * *

21 *Other investments.*

This account shall include the cost of investments in securities of (other than securities held in special funds) and advances made to other than affiliated companies. This account shall also include unrealized holding gains and losses on trading and available-for-sale types of security investments. Separate records shall be maintained to show the securities pledged and the following classes of investments in each nonaffiliated company:

(a) Stocks.

(b) Bonds.

(c) Other secured obligations.

(d) Unsecured notes.

(e) Investment advances.

22 *Sinking and other funds.*

(a) This account shall include cash and cost of investments in securities and other assets, trusteed or otherwise restricted, that have been segregated in distinct funds for purposes of redeeming outstanding obligations; purchasing or replacing assets; paying pensions, relief, hospitalization, and other similar items. This account shall also include unrealized holding gains and losses on trading and available-for-sale types of security investments. The cash value of life insurance policies on the lives of employees and officers to the extent that the carrier is the beneficiary of such policies shall also be included in this account. Separate subsidiary records shall be maintained for each distinct fund.

* * * * *

d. In Balance Sheet Accounts, accounts 23, 24, and 75.5 are removed.

e. In Balance Sheet Accounts, accounts 46, 47, 65, 66 and 77 are added to read as follows:

Balance Sheet Accounts

* * * * *

46 *Derivative instrument assets.*

This account shall include the amounts paid for derivative instruments, and the change in the fair value of all derivative instrument assets not designated as cash flow or fair value hedges. Account 640, miscellaneous income, shall be credited or debited as appropriate with the corresponding amount of the change in the fair value of the derivative instrument.

47 *Derivative instrument assets-Hedges.*

(a) This account shall include the amounts paid for derivative instruments, and the change in the fair value of derivative instrument assets, designated by the utility as cash flow or fair value hedges.

(b) When a carrier designates a derivative instrument asset as a cash flow hedge, it will record the change in the fair value of the derivative instrument in this account with a concurrent charge to account 77, accumulated other comprehensive income, with the effective portion of the derivative gain or loss. The ineffective portion of the cash flow hedge shall be charged to the same income or expense account that will be used when the hedged item enters into the determination of net income.

(c) When a carrier designates a derivative instrument as a fair value hedge, it shall record the change in the fair value of the derivative instrument in this account with a concurrent charge to a subaccount of the asset or liability that carries the item being hedged. The ineffective portion of the fair value hedge shall be charged to the same income or expense account that will be used when the hedged item enters into the determination of net income.

* * * * *

65 *Derivative instrument liabilities.*

This account shall include the change in the fair value of all derivative instrument liabilities not designated as cash flow or fair value hedges. Account 660, miscellaneous income charges, shall be debited or credited as appropriate with the corresponding amount of the change in the fair value of the derivative instrument.

66 *Derivative instrument liabilities-Hedges.*

(a) This account shall include the change in the fair value of derivative instrument liabilities designated by the carrier as cash flow or fair value hedges.

(b) A carrier shall record the change in the fair value of a derivative instrument liability related to a cash flow hedge in this account, with a concurrent charge to account 77, accumulated other comprehensive income, with the effective portion of the derivative gain or loss. The ineffective portion of the cash flow hedge shall be charged to the same income or expense account that will be used when the hedged item enters into the determination of net income.

(c) A carrier shall record the change in the fair of a derivative instrument liability related to a fair value hedge in this account, with a concurrent charge to a subaccount of the asset or liability that carries the item being hedged. The ineffective portion of the fair value hedge shall be charged to the same income or expense account that will be used when the hedged item enters into the determination of net income.

* * * * *

77 *Accumulated other comprehensive income.*

(a) This account shall include revenues, expenses, gains, and losses that are properly includable in other comprehensive income during the period. Examples of other comprehensive income include foreign currency items, minimum pension liability adjustments, unrealized gains and losses on certain investments in debt and equity securities, and cash flow hedges. Records supporting the entries to this account shall be maintained so that the utility can furnish the amount of other comprehensive income for each item included in this account.

(b) This account shall also be debited or credited, as appropriate, with amounts of accumulated other comprehensive income that have been included in the determination of net income during the period and in accumulated other comprehensive income in prior periods. Separate records for each category of items shall be maintained to identify the amount of the reclassification adjustments from accumulated other comprehensive income to earnings made during the period.

* * * * *

Note: The following appendices will not be published in the Code of Federal Regulations.

Appendix A—List of Commenters

Respondent	Abbreviation
1. American Forest & Paper Association, Process Gas Consumers Group, Georgia Industrial Group, Industrial Gas Users of Florida, Florida Industrial Gas Users.	American Forest.
2. American Electric Power System	AEP.
3. Automated Power Exchange, Inc.	APE.
4. American Public Gas Association	APGA.
5. Avista Energy, Inc.	Avista.
6. California Electric Oversight Board	Electric Board.
7. Calpine Corporation	Calpine.
8. Cinergy Services Inc.	Cinergy.
9. Cogentrix Energy, Inc.	Cogentrix.
10. Competitive Supply Commenters	Competitive.
11. Dominion Resources, Inc.	Dominion.
12. Duke Energy North America LLC	Duke Energy.
13. Edison Electric Institute	EEI.
14. Edison Mission Energy, Edison Mission Marketing & Trading, Inc.	Edison Mission.
15. Electric Power Supply Association	EPSA.
16. J. Aron & Company, Merrill Lynch Capital Services, Inc., Morgan Stanley Capital Group Inc.	J. Aron.
17. National Energy Marketers Association	NEM.
18. National Rural Electric Cooperative Assn.	NRECA.
19. Nicor Gas Company	Nicor.
20. Oneok Power Marketing Company	OPMC.
21. PanCanadian Energy Services, Inc.	PanCanadian.
22. Pinnacle West Capital Corporation	Pinnacle West.
23. Portland General Electric Company	Portland General.
24. Public Utilities Commission of Ohio	Ohio PUC.
25. Public Utilities Commission of the State of California	California PUC.
26. Reliant Resources, Inc.	RRI.
27. RWE Trading Americas, Inc.	RWE Trading.
28. Sempra Energy	Sempra.
29. Society for the Preservation of Oil Pipeline Shippers	Oil Pipeline Shippers.
30. Southern California Edison	Southern Cal Ed.
31. Southern Company	Southern.
32. State of New York Department of Public Service	NYPUC.
33. TXU Energy Trading Company LP	TXU.
34. UBS AG	UBS.
35. Williams Companies, Inc.	Williams.
36. Wisconsin Electric Power Company	Wisconsin Electric.

BILLING CODE 6717–01–P

Appendix B Revised Schedules for FERC Forms 1, 1-F, 2, 2-A, and 6

-1-

Name of Respondent	This Form is: (1) ☐ An Original (2) ☐ A Resubmission	Date of Report (Mo, Da, Yr)	Year of Report Dec 31, _____

List of Schedules

Enter in column (c) the terms "none", "not applicable or "NA" as appropriate, where no information or amounts have been reported for certain pages. Omit pages where the respondents are "none," "not applicable," or "NA"

Title of Schedule (a)	Reference Page No. (b)	Remarks (c)
GENERAL CORPORATE INFORMATION AND FINANCIAL STATEMENTS		
General Information	101	
Control Over Respondent	102	
Corporations Controlled by Respondent	103	
Officers	104	
Directors	105	
Security Holders and Voting Powers	106-107	
Important Changes During the Year	108-109	
Comparative Balance Sheet	110-113	
Statement of Income for the Year	114-117	
Statement of Retained Earnings for the Year	118-119	
Statement of Cash Flows	120-121	
Statement of Accumulated Comprehensive Income and Hedging Activities	122(a)(b)	
Notes to Financial Statements	123	
BALANCE SHEET SUPPORTING SCHEDULES (Assets and Other Debits)		
Summary of Utility Plant and Accumulated Provisions for Depreciation, Amortization, and Depletion	200-201	
Nuclear Fuel Materials	202-203	
Electric Plant in Service	204-207	
Electric Plant Leased to Others	213	
Electric Plant Held for Future Use	214	
Construction Work in Progress -- Electric	216	
Construction Overheads -- Electric	217	
General Description of Construction Overhead Procedure	218	
Accumulated Provision for Depreciation of Electric Utility Plant	219	
Nonutility Property	221	
Investment in Subsidiary Companies	224-225	
Materials and Supplies	227	
Allowances	228-229	
Extraordinary Property Losses	230	
Unrecovered Plant and Regulatory Study Costs	230	
Other Regulatory Assets	232	
Miscellaneous Deferred Debits	233	
Accumulated Deferred Income Taxes (Account 190)	234	
BALANCE SHEET SUPPORTING SCHEDULES (Liabilities and Other Credits)		
Capital Stock	250-251	
Capital Stock Subscribed, Capital Stock Liability for Conversion, Premium on Capital Stock, and installments Received on Capital Stock	252	
Other Paid-in Capital	253	
Discount on Capital Stock	254	
Capital Stock Expense	254	
Long-Term Debt	256-257	

Appendix B Revised Schedules for FERC Forms 1, 1-F, 2, 2-A, and 6 -2-

Name of Respondent	This Report is: (1) ☐ An Original (2) ☐ A Resubmission	Date of Report (Mo, Da, Yr)	Year of Report Dec 31, _____

COMPARATIVE BALANCE SHEET (ASSETS AND OTHER DEBITS)

Line No	Title of Account (a)	Ref. Page No. (b)	Balance at Beginning of year (c)	Balance at End of Year (d)
1	UTILITY PLANT			
2	Utility Plant (101)-106, 114)	200-201		
3	Construction Work in Progress (107)	200-201		
4	TOTAL UTILITY PLANT (Enter Total of Lines 2 and 3)			
5	(Less) Accum. Prov. For Depr. Amort. Depl. (108, 111, 115)	200-201		
6	Net Utility Plant (Enter Total of Line 4 less 5)	-		
7	Nuclear Fuel (120.1-120.4, 120.6)	202-203		
8	(Less) Accum. Prov. For Amort. Of Nucl. Fuel Assemblies (120.5)	202-203		
9	Net Nuclear Fuel (Enter Total of Lines 7 Less 8)	-		
10	Net Utility Plant (Enter Total of Line 6 and 9)	-		
11	Utility Plant Adjustments (116)	122		
12	Gas Stored Underground-Noncurrent (117)	-		
13	OTHER PROPERTY AND INVESTMENTS			
14	Nonutility Property (121)	221		
15	(Less) Accum. Prov. For Depr. And Amort. (122)	-		
16	Investments in Associated Companies (123)	-		
17	Investment in Subsidiary Companies (123.1)	224-225		
18	(For Cost of Account 123.1, See Footnote Page 224, Line 42)	-		
19	Noncurrent Portion of Allowances	228-229		
20	Other Investments (124)	-		
21	Special Funds (125-128)	-		
22	TOTAL Other Property and Investments (Total of Lines 14--17, 19--21)			
23	CURRENT AND ACCRUED ASSETS			
24	Cash (131)	-		
25	Special Deposits (132-134)	-		
26	Working Fund (135)	-		
27	Temporary Cash Investments (136)	-		
28	Notes Receivable (141)	-		
29	Customer Accounts Receivable (142)	-		
30	Other Accounts Receivable (143)	-		
31	(Less) Accum. Prov. For Uncollectible Acct. - Credit (144)	-		
32	Notes Receivable from Associated Companies (145)	-		
33	Accounts Receivable from Assoc. Companies (146)	-		
34	Fuel Stock (151)	227		
35	Fuel Stock Expenses Undistributed (152)	227		
36	Residuals (Elec) and Extracted Products (153)	227		
37	Plant Materials and Operating Supplies (154)	227		
38	Merchandise (155)	227		
39	Other Material and Supplies (156)	227		
40	Nuclear Materials held for Sale (157)	202-203/227		
41	Allowances (158.1 and 158.2)	228-229		
42	(Less) Noncurrent Portion of Allowances	228-229		
43	Stores Expenses Undistributed (163)	-		
44	Gas Stored Underground-Current (164.1)	-		
45	Liquefied Natural Gas Stored and Held for Processing (164.2-164.3)	-		
46	Prepayments (165)	-		
47	Advances for Gas (166-167)	-		
48	Interest and Dividends Receivable (171)	-		
49	Rents Receivable (172)	-		
50	Accrued Utility Revenues (173)	-		
51	Miscellaneous Current and Accrued Assets (174)	-		

Appendix B Revised Schedules for FERC Forms 1, 1-F, 2, 2-A, and 6 -3-

Name of Respondent	This Report is: (1) ☐ An Original (2) ☐ A Resubmission	Date of Report (Mo, Da, Yr)	Year of Report Dec 31, _____

COMPARATIVE BALANCE SHEET (ASSETS AND OTHER DEBITS) (Continued)

Line No.	Title of Account (a)	Ref Page No. (b)	Balance at Beginning of Year (c)	Balance at End of Year (d)
52	Derivative Instrument Assets (175)			
53	Derivative Instrument Assets - Hedges (176)			
54	TOTAL Current and Accrued Assets (Enter Total of Lines 24 thru 53)			
55	DEFERRED DEBITS			
56	Unamortized Debt Expenses (181)	-		
57	Extraordinary Property Losses (182.1)	230		
58	U n recovered Plant and Regulatory Study Costs (182.2)	230		
59	Other Regulatory Assets (182.3)	232		
60	Prelim. Survey and Investigation Charges (Elec) (183)	231		
61	Prelim. Sur. and Invest. Charges (Gas) (183.1, 183.2)	-		
62	Clearing Accounts (184)	-		
63	Temporary Facilities (185)	-		
64	Miscellaneous Deferred Debits (186)	233		
65	Def.-Losses from Disposition of Utility Plant (187)	-		
66	Research, Devel. and Demonstration Expend. (188)	352-353		
67	Unamortized Loss on Reacquired Debt (189)	-		
68	Accumulated Deferred Income Taxes (190)	234		
69	Unrecovered Purchased Gas Costs (191)	-		
70	TOTAL Deferred Debits (Enter Total of Lines 56 thru 69)			
71	TOTAL Assets and Other Debits *(Enter Total of Lines 10, 11, 12, 22, 54, and 70)*			

Appendix B Revised Schedules for FERC Forms 1, 1-F, 2, 2-A, and 6

-4-

Name of Respondent	This Report is: (1) ☐ An Original (2) ☐ A Resubmission	Date of Report (Mo, Da, Yr)	Year of Report Dec 31, ____

COMPARATIVE BALANCE SHEET (LIABILITIES AND OTHER CREDITS)

Line No.	Title of Account (a)	Ref Page No. (b)	Balance at Beginning of Year (c)	Balance at End of Year (d)
1	PROPRIETARY CAPITAL			
2	Common Stock Issued (201)	250-251		
3	Preferred Stock Issued (204)	250-251		
4	Capital Stocked Subscribed (202, 205)	252		
5	Stock Liability for Conversion (203, 206)	252		
6	Premium on Capital Stock (207)	252		
7	Other Paid-In Capital (208-211)	253		
8	Installments Received on Capital Stock (212)	252		
9	(Less) Discount on Capital Stock (213)	254		
10	(Less) Capital Stock Expense (214)	254		
11	Retained Earnings (215, 215.1, 216)	118-119		
12	Unappropriated Undistributed Subsidiary Earnings (216.1)	118-119		
13	(Less) Reacquired Capital Stock (217)	250-251		
14	Accumulated Other Comprehensive Income (219)	122(a)(b)		
15	TOTAL PROPRIETARY CAPITAL *(Enter Total of lines 2 thru 14)*			
16	LONG-TERM DEBT			
17	Bonds (221)	256-257		
18	(Less) Reacquired Bonds (222)	256-257		
19	Advances from Associated Companies (223)	256-257		
20	Other Long-term Debt (224)	256-257		
21	Unamortized Premium on Long-Term Debt (225)	-		
22	(Less) Unamortized Discount on Long-Term Debt - Debit (226)	-		
23	TOTAL Long-Term Debt (Enter Total of Lines 17 thru 22)			
24	OTHER NONCURRENT LIABILITIES			
25	Obligations Under Capital Leases - Noncurrent (227)	-		
26	Accumulated Provision for Property Insurance (228.1)	-		
27	Accumulated Provision for Injuries and Damages (228.2)	-		
28	Accumulated Provision for Pensions and Benefits (228.3)	-		
29	Accumulated Miscellaneous Operating Provisions (228.4)	-		
30	Accumulated Provision for Rate Refunds (229)	-		
31	TOTAL OTHER NONCURRENT LIABILITIES *(Enter Total of lines 25 thru 30)*			
32	CURRENT AND ACCRUED LIABILITIES			
33	Notes Payable (231)	-		
34	Accounts Payable (232)	-		
35	Notes Payable to Associated Companies (233)	-		
36	Accounts Payable to Associated Companies (234)	262-263		
37	Customer Deposits (235)	-		
38	Taxes Accrued (236)	-		
39	Interest Accrued (237)	-		
40	Dividends Declared (238)	-		
41	Matured Long-Term Debt (239)	-		
42	Matured Interest (240)	-		
43	Tax Collections Payable (241)	-		
44	Miscellaneous Current and Accrued Liabilities (242)	-		
45	Obligations under Capital Leases - Current (243)	-		
46	Derivative Instrument Liabilities (244)			
47	Derivative Instrument Liabilities -Hedges (245)			
48	TOTAL CURRENT & ACCRUED LIABILITIES (Enter Total of Lines 33-47)	-		

Appendix B Revised Schedules for FERC Forms 1, 1-F, 2, 2-A, and 6

Name of Respondent	This Report is: (1) ☐ An Original (2) ☐ A Resubmission	Date of Report (Mo, Da, Yr)	Year of Report Dec 31, ____

COMPARATIVE BALANCE SHEET (LIABILITIES AND OTHER CREDITS) (Continued)

Line No.	Title of Account (a)	Ref. Page No. (b)	Balance at Beginning of Year (c)	Balance at End of Year (d)
49	DEFERRED CREDITS			
50	Customer Advances for Construction (252)			
51	Accumulated Deferred Investment Tax Credits (255)	266-267		
52	Deferred Gains from Disposition of Utility Plant (256)			
53	Other Deferred Credits (253)	269		
54	Other Regulatory Liabilities (254)	278		
55	Unamortized Gain on Reacquired Debt (257)	-		
56	Accumulated Deferred Income Taxes (281-283)	272-277		
57	TOTAL DEFERRED CREDITS *(Enter Total of lines 50 thru 56)*			
58				
59				
60				
61				
62				
63				
64				
65				
66				
67				
68				
69				
70				
71	TOTAL Liabilities and Other Credits *(Enter Total of lines 15, 23, 31, 48 and 57)*			

Appendix B Revised Schedules for FERC Forms 1, 1-F, 2, 2-A, and 6

-6-

Name of Respondent	This Report is: (1) ☐ An Original (2) ☐ A Resubmission	Date of Report (Mo, Da, Yr)	Year of Report Dec 31, ____

STATEMENT OF ACCUMULATED COMPREHENSIVE INCOME AND HEDGING ACTIVITIES

1. Report in columns (b) (c) (d) and (e) the amounts of accumulated other comprehensive income items, on a net-of-tax basis, where appropriate.
2. Report in columns (f) and (g) the amounts of other categories of other cash flow hedges.
3. For each category of hedges that have been accounted for as "fair value hedges", report the accounts affected and the related amounts in a footnote.

Line	Item (a)	Unrealized Gains and Losses on Available-for-Sale Securities (B)	Minimum Pension Liability adjustment (net amount) (C)	Foreign Currency Hedges (D)	Other Adjustments (E)
1	Balance of Account 219 at Beginning of Preceding Year				
2	Preceding yr. Reclassification from Account 219 to Net Income				
3	Preceding Year Changes in Fair Value				
4	Total (lines 2 and 3)				
5	Balance of Account 219 at End of Preceding Year/ Beginning of Current Year.				
6	Current Year Reclassification From Account 219 to Net Income				
7	Current Year Changes in Fair Value				
8	Total (lines 6 and 7)				
9	Balance of Account 219 at End of Current Year				

Appendix B Revised Schedules for FERC Forms 1, 1-F, 2, 2-A, and 6

-7-

Name of Respondent	This Report is: (1) An Original (2) A Resubmission	Date of Report (Mo, Da, Yr)	Year of Report Dec 31, ____

STATEMENT OF ACCUMULATED COMPREHENSIVE INCOME, COMPREHENSIVE INCOME, AND HEDGING ACTIVITIES

	Other Cash Flow Hedges [Insert Category] (F)	Other Cash Flow Hedges [Insert Category] (G)	Totals for each category of items recorded in Account 219 (H)	Net Income (Carried Forward from Page 117, Line 72) (I)	Total Comprehensive Income (J)
1					
2					
3					
4					
5					
6					
7					
8					
9					

TABLE OF CONTENTS

PART	TITLE	PAGE
	Instructions	2
I	Identification	3
II	Attestation	3
III	Comparative Balance Sheet	4-5
IV	Statement of Income for the Year	6-8
V	Statement of Retained Earnings	9
VI	Statement of Cash Flows	10-11
VII	Statement of Accumulated Comprehensive Income and Hedging Activities 12(a)(b)	
VIII	Notes to Financial Statements	13-14
IX	Allowances	15-16
X	Other Regulatory Assets	17
XI	Data on Security Holders and Voting Powers	18
XII	Data on Officers and Directors	18
XIII	Accumulated Provision for Depreciation and Amortization of Utility Plant	19
XIV	Capital Stock Data	19
XV	Long-Term Debt Data	19
XVI	Other Regulatory Liabilities	20
XVII	Electric Sales Data for the Year	21
XVIII	Electric Operation and Maintenance Expense	21
XIX	Sales for Resale	22
XX	Purchased Power	23
XXI	Utility Plant Data	24
XXII	Footnote Data	25
	SUBSTITUTE PAGES FOR NONMAJOR RESPONDENTS USING ACCOUNTS DESIGNATED FOR MAJOR CLASSIFICATION (Part 101)	
III	Comparative Balance Sheet (110-113)	
IV	Statement of Income for the Year (114-117)	
V	Statement of Retained Earnings for the Year (118-119)	
XXI	Summary of Utility Plant and Accumulated Provisions for Depreciation, Amortization and Depletion (200-201, 204-207)	
XIII	Accumulated Provision for Depreciation of Electric Utility Plant (219)	
XVII	Electric Operating Revenues (300-301)	
XIX	Sales for Resale (310-311)	
XVIII	Electric Operation and Maintenance Expenses (320-323)	
XX	Purchased Power (326-327)	

INSTRUCTIONS FOR FILING FERC Form No. 1-F

GENERAL INFORMATION

1. Purpose

This form is a regulatory requirement (18 CFR 141.2). It is designed to collect financial information from privately owned electric utilities and licensees who have generation, transmission, distribution and sales of electric energy, however produced throughout the United States and its possessions, subject to the jurisdiction of the Federal Energy Regulatory Commission.

II. Who Must Submit

Each Nonmajor Public Utility or Licensee, as classified in the Commission's Uniform System of Accounts Prescribed for Public Utilities and Licensees Subject to the Provisions of the Federal Power Act (18 CFR 101 (US of A.) must submit this form.

Each Nonmajor public utility or licensee classified as Class C or Class D prior to January 1, 1984, may continue to file only the basic financial statements -Parts 111, IV and V.

Note: Nonmajor means having total annual sales of 10,000 megawatt hours or more in the previous calendar year and not classified as "Major."

Appendix B Revised Schedules for FERC Forms 1, 1-F, 2, 2-A, and 6 -9-

Name of Respondent	This Report Is: (1) ☐ An Original (2) ☐ A Resubmission	Date of Report (Mo, Da, Yr)	Year of Report Dec 31, _____

PART III: COMPARATIVE BALANCE SHEET

	Assets and Other Debits (a)	Balance at Beginning of year (b)	Balance at End of Year (c)
01	Utility plant *(101 - 107, 114, 118)*		
02	Accumulated Provision for Depreciation and Amortization *(110, 119)*		
03	NET UTILITY PLANT *(Enter total of line 01 less 02)*		
04	Utility Plant Adjustments *(116)*		
05	Gas Stored Underground - Noncurrent		
06	Nonutility Property *(121)*		
07	Accumulated Provision For Depreciation and Amortization - Credit *(122)*		
08	Noncurrent Portion of Allowances		
09	Other Investments and Special Funds *(124-129)*		
10	CURRENT AND ACCRUED ASSETS:		
11	Cash and Working Funds *(130)*		
12	Temporary Cash Investments *(136)*		
13	Notes and Accounts Receivable *(141, 142, 143, 145, 146)(Report amounts applicable to associated companies in a footnote)*		
14	Accumulated provision for Uncollectible Accounts - Credit *(144)*		
15	Plant Materials and Operating Supplies *(154)*		
16	Allowances *(158.1 and 158.2)*		
17	(Less) Noncurrent Portion of Allowances		
18	Gas Stored *(164.1, 164.2)*		
19	Prepayments *(165)*		
20	Miscellaneous Current and Accrued Assets *(174)*		
21	Derivative Instrument Assets (175)		
22	Derivative Instruments Assets - Hedges (176)		
23	TOTAL CURRENT AND ACCRUED ASSETS *(Enter total of lines 11 thru 22)*		
24	DEFERRED DEBITS:		
25	Unamortized Debt Expense *(181)*		
26	Extraordinary Property Losses *(182.1)*		
27	Unrecovered Plant and Regulatory Study Costs *(182.2)*		
28	Other Regulatory sets *(182.3)*		
29	Miscellaneous Deferred Debits *(186)*		
30	Deferred Losses from Disposition of Utility Plant *(187)*		
31	Unamortized Loss on Reacquired Debt *(189)*		
32	Accumulated Deferred Income Taxes *(190)*		
33	Unrecovered Purchased Gas Costs *(191)*		
34	TOTAL DEFERRED DEBITS *(Enter total of Lies 25 thru 33)*		
35	TOTAL ASSETS AND OTHER DEBITS *(Enter total lines 03 thru 09, 23 and 34)*		

Appendix B Revised Schedules for FERC Forms 1, 1-F, 2, 2-A, and 6

-10-

Name of Respondent	This Report is: (1) ☐ An Original (2) ☐ A Resubmission	Date of Report (Mo, Da, Yr)	Year of Report Dec 31, _____

PART III: COMPARATIVE BALANCE SHEET (Continued)

	Liabilities and Other Credits (a)	Balance at Beginning of year (b)	Balance at End of Year (c)
01	Common Stock Issued (201)		
02	Preferred Stock Issued (204)		
03	Miscellaneous Paid-in Capital (211)		
04	Installments Received on Capital Stock (212)		
05	Discount on Capital Stock (213)		
06	Capital Stock Expenses - Debit (214)		
07	Retained Earnings (215-216)		
08	Reacquired Capital Stock - Debit (217)		
09	Noncorporate Proprietorship (218)		
10	Accumulated Other Comprehensive Income (219)		
11	TOTAL PROPRIETORSHIP CAPITAL (Enter Total of Lines 01 thru 10)		
12	Bonds (221)		
13	Advances from Associated Companies (223)		
14	Other Long-term Debt (Specify in footnote) (224)		
15	Unamortized Premium on Long-term Debt (225)		
16	Unamortized Discount on Long-term Debt - Debit (226)		
17	TOTAL LONG-TERM DEBT (Enter Total of Lines 12 thru 16)		
18	OTHER NONCURRENT LIABILITIES:		
19	Obligations Under Capital Leases - Noncurrent (227)		
20	Accumulated Provision for Property Insurance (228.1)		
21	Accumulated Provision for Injuries and Damages (228.2)		
22	Accumulated Provision for Pensions and Benefits (228.3)		
23	Accumulated Miscellaneous Operating Provisions (228.4)		
24	Accumulated Provision for Rate Refunds (229)		
25	TOTAL OTHER NONCURRENT LIABILITIES (Enter Total of Lines 19 thru 24)		
26	CURRENT AND ACCRUED LIABILITIES:		
27	Notes and Accounts Payable (Report amounts applicable to associated companies in a footnote) (231 to 234)		
28	Customer Deposits (235)		
29	Taxes Accrued (236)		
30	Interest Accrued (237)		
31	Miscellaneous Current and Accrued Liabilities (242)		
32	Obligations Under Capital Leases - Current (243)		
33	Derivative Instrument Liabilities (244)		
34	Derivative Instrument Liabilities - Hedges (245)		
35	TOTAL CURRENT AND ACCRUED LIABILITIES (Enter Total of Lines 27 thru 34)		
36	DEFERRED CREDITS:		
37	Customer Advances for Construction (252)		
38	Other Deferred Credits (253)		
39	Other Regulatory Liabilities (254)		
40	Accumulated Deferred Investment Tax Credits (255)		
41	Deferred Gains from Disposition of Utility Plant (256)		
42	Unamortized Gain on on Reacquired Debt (257)		
43	Accumulated Deferred Income Taxes (281-283)		
44	TOTAL DEFERRED CREDITS (Enter Total of Lines 37 thru 43)		
45	TOTAL LIABILITIES AND OTHER CREDITS (Enter Total of Lines 11, 17, 25, 35 and 44)		

Appendix B Revised Schedules for FERC Forms 1, 1-F, 2, 2-A, and 6 -11-

Name of Respondent	This Report is: (1) ☐ An Original (2) ☐ A Resubmission	Date of Report (Mo, Da, Yr)	Year of Report Dec 31, ____

STATEMENT OF ACCUMULATED COMPREHENSIVE INCOME AND HEDGING ACTIVITIES

1. Report in columns (b) (c) (d) and (e) the amounts of accumulated other comprehensive income items, on a net-of-tax basis, where appropriate.

2. Report in columns (f) and (g) the amounts of other categories of other cash flow hedges.

3. For each category of hedges that have been accounted for as "fair value hedges", report the accounts affected and the related amounts in a footnote.

Line	Item (a)	Unrealized Gains and Losses on available-for-sale securities (B)	Minimum Pension liability Adjustment (net amount) (C)	Foreign Currency Hedges (D)	Other Adjustments (E)
1	Balance of Account 219 at Beginning of Preceding Year				
2	Preceding Year Reclassification from Account 219 to Net Income				
3	Preceding Year Changes in Fair Value				
4	Total (lines 2 and 3)				
5	Balance of Account 219 at End of Preceding Year/Beginning of Current Year				
6	Current Year Reclassifications From Account 219 to Net Income				
7	Current Year Changes in Fair Value				
8	Total (lines 6 and 7)				
9	Balance of Account 219 at End of Current Year				

Appendix B Revised Schedules for FERC Forms 1, 1-F, 2, 2-A, and 6

-12-

Name of Respondent	This Report is: (1) An Original (2) A Resubmission	Date of Report (Mo, Da, Yr)	Year of Report Dec 31, ____

STATEMENT OF ACCUMULATED COMPREHENSIVE INCOME AND HEDGING ACTIVITIES

	Other Cash Flow Hedges [Insert Category] (F)	Other Cash Flow Hedges [Insert Category] (G)	Totals for each category of items recorded in Account 219 (H)	Net Income (Carried Forward from Page 8, Line 63) (I)	Total Comprehensive Income (J)
1					
2					
3					
4					
5					
6					
7					
8					
9					

Appendix B Revised Schedules for FERC Forms 1, 1-F, 2, 2-A, and 6 -13-

Name of Respondent	This Report is: ☐ An Original ☐ A Resubmission	Date of Report (Mo, Da, Yr)	Year of Report Dec 31, _____

List of Schedules

Enter in column (d) the terms "none," "not applicable," or "NA" as appropriate, where no information or amounts have been reported for certain pages Omit pages where the responses are "none," "not applicable," or "NA

Line No.	Title of Schedule (a)	Reference Page No. (b)	Date Revised (c)	Remarks (d)
	GENERAL CORPORATE INFORMATION AND FINANCIAL STATEMENTS			
1	General Information	101		
2	Control over Respondent	102		
3	Corporations Controlled by Respondent	103		
4	Security Holders and Voting Powers	107		
5	Important Changes During the Year	108		
6	Comparative Balance Sheet	110-113		
7	Statement of Income for the Year	114-116		
8	Statement of Accumulated Comprehensive Income and Hedging Activities	117		
9	Statement of Retained Earnings for the Year	118(a)(b)		
10	Statement of Cash Flows	120-121		
11	Notes to the Financial Statements	122		
	BALANCE SHEET SUPPORTING SCHEDULES (Assets and Other Debits)			
12	Summary of Utility Plant and Accumulated Provisions for Depreciation, Amortization, and Depletion	200-201		
13	Gas Plant in Service	204-209		
14	Gas Property and Capacity Leased from Others	212		
15	Gas Property and Capacity Leased to Others	213		
16	Gas Plant Held for Future Use	214		
17	Construction Work in Progress - Gas	216		
18	General Description of Construction Overhead Procedure	218		
19	Accumulated Provision for Depreciation of Gas Utility Plant	219		
20	Gas Stored	220		
21	Investments	222-223		
22	Investments in Subsidiary Companies	224-225		
23	Prepayment	230		
24	Extraordinary Property Losses	230		
25	Unrecovered Plant and Regulatory Study Costs	230		
26	Other Regulatory Assets	232		
27	Miscellaneous Deferred Debits	233		
28	Accumulated Deferred Income Taxes	234-235		
	BALANCE SHEET SUPPORTING SCHEDULES (Liabilities and Other Credits)			
29	Capital Stock	250-251		
30	Capital Stock Subscribed, Capital Stock Liability for Conversion, Premium on Capital Stock, and Installments Received on Capital Stock	252		
31	Other Paid-in Capital	253		
32	Discount on Capital Stock	254		
33	Capital Stock Expense	254		
34	Securities Issued or Assumed and Securities Refunded or Retired During the Year	255		
35	Long-Term Debt	256-257		
36	Unamortized Debt Expense, Premium, and Discount on Long-Term Debt	258-259		
37	Unamortized Loss and Gain on Reacquired Debt	260		
38	Reconciliation of Reported Net Income with Taxable Income for Federal Income Taxes	261		

Appendix B Revised Schedules for FERC Forms 1, 1-F, 2, 2-A, and 6 -14-

Name of Respondent	This Report is: ☐ An Original ☐ A Resubmission	Date of Report (Mo, Da, Yr)	Year of Report Dec 31, _____

LIST OF SCHEDULES (Natural Gas Company)

Enter in column (d) the terms "none," "not applicable," or "NA" as appropriate, where no information or amounts have been reported for certain pages Omit pages where the responses are "none," "not applicable," or "NA

Line No.	Title of Schedule (a)	Reference Page No. (b)	Date Received (c)	Remarks
	BALANCE SHEET SUPPORTING SCHEDULES (Liabilities and Other Credits) (Continued)			
39	Taxes Accrued, Prepaid, and Charged During Year	262-263		
40	Miscellaneous Current and Accrued Liabilities	268		
41	Other Deferred Credits	269		
42	Accumulated Deferred Income Taxes-Other Property	274-275		
43	Accumulated Deferred Income Taxes-Other	276-277		
44	Other Regulatory Liabilities	278		
	INCOME ACCOUNT SUPPORTING SCHEDULES			
45	Gas Operating Revenues	300-301		
46	Revenues from Transportation of Gas of Others Through Gathering Facilities	302-303		
47	Revenues from Transportation of Gas of Others Through Transmission Facilities	304-305		
48	Revenues from Storage Gas of Others	306-307		
49	Other Gas Revenues	308		
50	Gas Operation and Maintenance Expenses	317-325		
51	Exchange and Imbalance Transactions	328		
52	Gas Used in Utility Operations	331		
53	Transmission and Compression of Gas by Others	332		
54	Other Gas Supply Expenses	334		
55	Miscellaneous General Expenses-Gas	335		
56	Depreciation, Depletion, and Amortization of Gas Plant	336-338		
57	Particulars Concerning Certain income Deduction and Interest Charges Accounts	340		
	COMMON SECTION			
58	Regulatory Commission Expenses	350-351		
59	Distribution of Salaries and Wages	354-355		
60	Charges for Outside Professional and Other Consultative Services	357		
	GAS PLANT STATISTICAL DATA			
61	Compressor Stations	508-509		
62	Gas Storage Projects	512-513		
63	Transmission Lines	514		
64	Transmission System Peak Deliveries	518		
65	Auxiliary Peaking Facilities	519		
66	Gas Account-Natural Gas	520		
67	System Map	522		
68	Footnote Reference	551		
69	Footnote Text	552		
70	Stockholders' Reports (check appropriate box)			

☐ Four copies will be submitted
☐ No annual report to stockholders is prepared

Appendix B Revised Schedules for FERC Forms 1, 1-F, 2, 2-A, and 6 -15-

Name of Respondent	This Report is: ☐ An Original ☐ A Resubmission	Date of Report (Mo, Da, Yr)	Year of Report Dec 31, _____

COMPARATIVE BALANCE SHEET (ASSETS AND OTHER DEBITS) (Continued)

Line No.	Title of Account (a)	Reference Page Number (b)	Balance at End of Current Year (in dollars) (c)	Balance at End of Previous Year (in dollars) (d)
44	Allowances (158 1 and 158 2)			
45	*(Less)* Noncurrent Portion of Allowances			
46	Stores Expenses Undistributed (163)			
47	Gas Stored Underground - Current (164 1)	220		
48	Liquefied Natural Gas stored and Held for Processing (164 2 thru 164 3)	220		
49	Prepayments (165)	230		
50	Advances for Gas (166 and 167)			
51	Interest and Dividends Receivable (171)			
52	Rents Receivable (172)			
53	Accrued Utility Revenues (173)			
54	Miscellaneous Current and Accrued Assets (174)			
55	Derivative Instrument Assets (175)			
56	Derivative Instrument Assets - Hedges (176)			
57	TOTAL Current and Accrued Assets (Total of lines 27 thru 56)			
58	DEFERRED DEBITS			
59	Unamortized Debt Expense (181)			
60	Extraordinary Property Losses (182 1)	230		
61	Unrecovered Plant and Regulatory Study Costs (182 2)	230		
62	Other Regulatory Assets (182 3)	232		
63	Preliminary Survey and Investigation Charges (Electric) (183)			
64	Preliminary Survey and Investigation Charges (Gas) (183 1 and 183 2)			
65	Clearing Accounts (184)			
66	Temporary Facilities (185)			
67	Miscellaneous Deferred Debits (186)	233		
68	Deferred Losses from Disposition of Utility Plant (187)			
69	Research, Development, and Demonstration Expend (188)			
70	Unamortized Loss on Reacquired Debt (189)			
71	Accumulated Deferred Income Taxes (190)	234-235		
72	Unrecovered Purchased Gas Costs (191)			
73	TOTAL Deferred Debits (Total of lines 59 thru 72)			
74	TOTAL Assets and Other Debits (Total of lines 10-15, 25, 57 and 73)			

Appendix B Revised Schedules for FERC Forms 1, 1-F, 2, 2-A, and 6 -16-

Name of Respondent	This Report is: ☐ An Original ☐ A Resubmission	Date of Report (Mo, Da, Yr)	Year of Report Dec 31, _____

COMPARATIVE BALANCE SHEET (LIABILITIES AND OTHER CREDITS)

Line No.	Title of Account (a)	Reference Page Number (b)	Balance at End of Current Year (in dollars) (c)	Balance at End of Previous Year (in dollars) (d)
1	PROPRIETARY CAPITAL			
2	Common Stock Issued (201)	250-251		
3	Preferred Stock Issued (204)	250-251		
4	Capital Stock Subscribed (202, 205)	252		
5	Stock Liability for Conversion (203, 206)	252		
6	Premium on Capital Stock (207)	252		
7	Other Paid-In Capital (208-211)	253		
8	Installments Received on Capital Stock (212)	252		
9	*(Less)* Discount on Capital Stock (213)	254		
10	*(Less)* Capital Stock Expense (214)	254		
11	Retained Earnings (215, 215 1, 216)	118-119		
12	Unappropriated Undistributed Subsidiary Earnings (216 1)	118-119		
13	*(Less)* Reacquired Capital Stock (217)	250-251		
14	Accumulated Other Comprehensive Income (219)	118(a)(b)		
15	TOTAL Proprietary Capital (Total of line 2 thru 14)			
16	LONG TERM DEBT			
17	Bonds (221)	256-257		
18	*(Less)* Reacquired Bonds (222)	256-257		
19	Advances from Associated Companies (223)	256-257		
20	Other Long-Term Debt (224)	256-257		
21	Unamortized Premium on Long-Term Debt (225)	258-259		
22	(Less) Unamortized Discount on Long-Term Debt-Dr (226)	258-259		
23	(Less) Current Portion of Long-Term Debt			
24	TOTAL Long-Term Debt (Total of lines 17 thru 23)			
25	OTHER NONCURRENT LIABILITIES			
26	Obligations Under Capital Leases – Noncurrent (227)			
27	Accumulated Provision for Property Insurance (228 1)			
28	Accumulated Provision for Injuries and Damages (228 2)			
29	Accumulated Provision for Pensions and Benefits (228 3)			
30	Accumulated Miscellaneous Operating Provision (228 4)			
31	Accumulated Provision for Rate Refunds (229)			
32	TOTAL Other Noncurrent Liabilities (total of lines 26 thru 31)			

Appendix B Revised Schedules for FERC Forms 1, 1-F, 2, 2-A, and 6 -17-

Name of Respondent	This Report is: ☐ An Original ☐ A Resubmission	Date of Report (Mo, Da, Yr)	Year of Report Dec 31, _____

COMPARATIVE BALANCE SHEET (LIABILITIES AND OTHER CREDITS) (Continued)

Line No.	Title of Account (a)	Reference Page Number (b)	Balance at End of Current Year (in dollars) (c)	Balance at End of Previous Year (in dollars) (d)
33	CURRENT AND ACCRUED LIABILITIES			
34	Current Portion of Long-Term Debt			
35	Notes Payable (231)			
36	Accounts Payable (232)			
37	Notes Payable to Associated Companies (233)			
38	Accounts Payable to Associated Companies (234)			
39	Customer Deposits (235)			
40	Taxes Accrued (236)	262-263		
41	Interest Accrued (237)			
42	Dividends Declared (238)			
43	Matured Long-Term Debt (239)			
44	Matured Interest (240)			
45	Tax Collections Payable (241)			
46	Miscellaneous Current and Accrued Liabilities (242)	268		
47	Obligations Under Capital Leases – Current (243)			
48	Derivative Instrument Liabilities (244)			
49	Derivative Instrument Liabilities - Hedges (245)			
50	TOTAL Current and Accrued Liabilities (Total of lines 34 thru 49)			
51	DEFERRED CREDITS			
52	Customer Advances for Construction (252)			
53	Accumulated Deferred Investment Tax Credits (255)			
54	Deferred Gains from Disposition of Utility Plant (256)			
55	Other Deferred Credits (253)	269		
56	Other Regulatory Liabilities (254)	278		
57	Unamortized Gain on Reacquired Debt (257)	260		
58	Accumulated Deferred Income Taxes (281-283)			
59	TOTAL Deferred Credits (Total of lines 52 thru 58)			
60	TOTAL Liabilities and Other Credits (Total of lines 15, 24, 32, 50, and 59)			

Appendix B Revised Schedules for FERC Forms 1, 1-F, 2, 2-A, and 6

Name of Respondent	This Report is: (1) ☐ An Original (2) ☐ A Resubmission	Date of Report (Mo, Da, Yr)	Year of Report Dec 31, ____

STATEMENT OF ACCUMULATED COMPREHENSIVE INCOME AND HEDGING ACTIVITIES

1. Report in columns (b) (c) (d) and (e) the amounts of accumulated other comprehensive income items, on a net-of-tax basis, where appropriate.
2. Report in columns (f) and (g) the amounts of other categories of other cash flow hedges.
3. For each category of hedges that have been accounted for as "fair value hedges", report the accounts affected and the related amounts in a footnote.

Line	Item (a)	Unrealized Gains and Losses on available-for-sale securities (B)	Minimum Pension liability Adjustment (net amount) (C)	Foreign Currency Hedges (D)	Other Adjustments (E)
1	Balance of Account 219 at Beginning of Preceding Year				
2	Preceding Year Reclassification from Account 219 to Net Income				
3	Preceding Year Changes in Fair Value				
4	Total (lines 2 and 3)				
5	Balance of Account 219 at End of Preceding Year / Beginning of Current Year				
6	Current Year Reclassifications From Account 219 to Net Income				
7	Current Year Changes in Fair Value				
8	Total (lines 6 and 7)				
9	Balance of Account 219 at End of Current Year				

Appendix B Revised Schedules for FERC Forms 1, 1-F, 2, 2-A, and 6

Name of Respondent	This Report is: (1) An Original (2) A Resubmission	Date of Report (Mo, Da, Yr)	Year of Report Dec 31, _____

STATEMENT OF ACCUMULATED COMPREHENSIVE INCOME AND HEDGING ACTIVITIES

	Other Cash Flow Hedges [Insert Category] (F)	Other Cash Flow Hedges [Insert Category] (G)	Totals for each category of items recorded in Account 219 (H)	Net Income (Carried Forward from Page 116, Line 72) (I)	Total Comprehensive Income (J)
1					
2					
3					
4					
5					
6					
7					
8					
9					

Appendix B Revised Schedules for FERC Forms 1, 1-F, 2, 2-A, and 6

-20-

Name of Respondent	This Report is: ☐ An Original ☐ A Resubmission	Date of Report (Mo, Da, Yr)	Year of Report Dec 31,

LIST OF SCHEDULES (Natural Gas Company)

Enter in column (d) the terms "none," "not applicable," or "NA" as appropriate, where no information or amounts have been reported for certain pages Omit pages where the responses are "none," "not applicable," or "NA

Line No	Title of Schedule (a)	Reference Page No (b)	Date Revised (c)	Remarks (d)
	GENERAL CORPORATE INFORMATION AND FINANCIAL STATEMENTS			
1	Security Holders and Voting Powers	107		
2	Comparative Balance Sheet	110-113		
3	Statement of Income for the Year	114-116		
4	Statement of Accumulated Comprehensive Income and Hedging Activities	117		
5	Statement of Retained Earnings for the Year	118-119		
6	Statements of Cash Flows	120-121		
7	Notes to Financial Statements	122		
	BALANCE SHEET SUPPORTING SCHEDULES (Assets and Other Debits)			
8	Gas Plant in Service	204-209		
9	General Information on Plant and Operations	211		
10	Gas Property and Capacity Leased From and to Others	212-213		
11	Accumulated Provision for depreciation of Gas Utility Plant	219		
12	Other Regulatory Assets - Gas	232		
	BALANCE SHEET SUPPORTING SCHEDULES (Liabilities and Other Credits)			
13	Capital Stock and Long-Term Debt Data	250		
14	Other Regulatory Liabilities	278		
	INCOME ACCOUNT SUPPORTING SCHEDULES			
15	Gas Operating Revenues	300-301		
16	Gas Operation and Maintenance Expenses	317-325		
	GAS PLANT STATISTICAL DATA			
17	Gas Account-Natural Gas	520		
18	Footnote Reference	551		
19	Footnote Text	552		

Appendix B Revised Schedules for FERC Forms 1, 1-F, 2, 2-A, and 6 -21-

Name of Respondent	This Report is: ☐ An Original ☐ A Resubmission	Date of Report (Mo, Da, Yr)	Year of Report Dec 31, ____

COMPARATIVE BALANCE SHEET (ASSETS AND OTHER DEBITS) (Continued)

Line No.	Title of Account (a)	Reference Page Number (b)	Balance at End of Current Year (in dollars) (c)	Balance at End of Previous Year (in dollars) (d)
44	Allowances (158 1 and 158 2)			
45	*(Less)* Noncurrent Portion of Allowances			
46	Stores Expenses Undistributed (163)			
47	Gas Stored Underground - Current (164 1)	220		
48	Liquefied Natural Gas stored and Held for Processing (164 2 thru 164 3)	220		
49	Prepayments (165)	230		
50	Advances for Gas (166 and 167)			
51	Interest and Dividends Receivable (171)			
52	Rents Receivable (172)			
53	Accrued Utility Revenues (173)			
54	Miscellaneous Current and Accrued Assets (174)			
55	Derivative Instrument Assets (175)			
56	Derivative Instrument Assets - Hedges (176)			
57	TOTAL Current and Accrued Assets (Total of lines 27 thru 56)			
58	DEFERRED DEBITS			
59	Unamortized Debt Expense (181)			
60	Extraordinary Property Losses (182 1)	230		
61	Unrecovered Plant and Regulatory Study Costs (182 2)	230		
62	Other Regulatory Assets (182 3)	232		
63	Preliminary Survey and Investigation Charges (Electric) (183)			
64	Preliminary Survey and Investigation Charges (Gas) (183 1 and 183 2)			
65	Clearing Accounts (184)			
66	Temporary Facilities (185)			
67	Miscellaneous Deferred Debits (186)	233		
68	Deferred Losses from Disposition of Utility Plant (187)			
69	Research, Development, and Demonstration Expend (188)			
70	Unamortized Loss on Reacquired Debt (189)			
71	Accumulated Deferred Income Taxes (190)	234-235		
72	Unrecovered Purchased Gas Costs (191)			
73	TOTAL Deferred Debits (Total of lines 59 thru 72)			
74	TOTAL Assets and Other Debits (Total of lines 10-15, 25, 57 and 73)			

Appendix B Revised Schedules for FERC Forms 1, 1-F, 2, 2-A, and 6 -22-

Name of Respondent	This Report is: ☐ An Original ☐ A Resubmission	Date of Report (Mo, Da, Yr)	Year of Report Dec 31, _____

COMPARATIVE BALANCE SHEET (LIABILITIES AND OTHER CREDITS)

Line No.	Title of Account (a)	Reference Page Number (b)	Balance at End of Current Year (in dollars) (c)	Balance at End of Previous Year (in dollars) (d)
1	PROPRIETARY CAPITAL			
2	Common Stock Issued (201)	250-251		
3	Preferred Stock Issued (204)	250-251		
4	Capital Stock Subscribed (202, 205)	252		
5	Stock Liability for Conversion (203, 206)	252		
6	Premium on Capital Stock (207)	252		
7	Other Paid-In Capital (208-211)	253		
8	Installments Received on Capital Stock (212)	252		
9	*(Less)* Discount on Capital Stock (213)	254		
10	*(Less)* Capital Stock Expense (214)	254		
11	Retained Earnings (215, 215 1, 216)	118-119		
12	Unappropriated Undistributed Subsidiary Earnings (216 1)	118-119		
13	*(Less)* Reacquired Capital Stock (217)	250-251		
14	Accumulated Other Comprehensive Income (219)	117		
15	TOTAL Proprietary Capital (Total of line 2 thru 14)			
16	LONG TERM DEBT			
17	Bonds (221)	256-257		
18	*(Less)* Reacquired Bonds (222)	256-257		
19	Advances from Associated Companies (223)	256-257		
20	Other Long-Term Debt (224)	256-257		
21	Unamortized Premium on Long-Term Debt (225)	258-259		
22	(Less) Unamortized Discount on Long-Term Debt-Dr (226)	258-259		
23	(Less) Current Portion of Long-Term Debt			
24	TOTAL Long-Term Debt (Total of lines 17 thru 23)			
25	OTHER NONCURRENT LIABILITIES			
26	Obligations Under Capital Leases – Noncurrent (227)			
27	Accumulated Provision for Property Insurance (228 1)			
28	Accumulated Provision for Injuries and Damages (228 2)			
29	Accumulated Provision for Pensions and Benefits (228 3)			
30	Accumulated Miscellaneous Operating Provision (228 4)			
31	Accumulated Provision for Rate Refunds (229)			
32	TOTAL Other Noncurrent Liabilities (total of lines 26 thru 31)			

Appendix B Revised Schedules for FERC Forms 1, 1-F, 2, 2-A, and 6 -23-

Name of Respondent	This Report is: ☐ An Original ☐ A Resubmission	Date of Report (Mo, Da, Yr)	Year of Report Dec 31, _____

COMPARATIVE BALANCE SHEET (LIABILITIES AND OTHER CREDITS) (Continued)

Line No.	Title of Account (a)	Reference Page Number (b)	Balance at End of Current Year (in dollars) (c)	Balance at End of Previous Year (in dollars) (d)
33	CURRENT AND ACCRUED LIABILITIES			
34	Current Portion of Long-Term Debt			
35	Notes Payable (231)			
36	Accounts Payable (232)			
37	Notes Payable to Associated Companies (233)			
38	Accounts Payable to Associated Companies (234)			
39	Customer Deposits (235)			
40	Taxes Accrued (236)	262-263		
41	Interest Accrued (237)			
42	Dividends Declared (238)			
43	Matured Long-Term Debt (239)			
44	Matured Interest (240)			
45	Tax Collections Payable (241)			
46	Miscellaneous Current and Accrued Liabilities (242)	268		
47	Obligations Under Capital Leases -- Current (243)			
48	Derivative Instrument Liabilities (244)			
49	Derivative Instrument Liabilities - Hedges (245)			
50	TOTAL Current and Accrued Liabilities (Total of lines 34 thru 49)			
51	DEFERRED CREDITS			
52	Customer Advances for Construction (252)			
53	Accumulated Deferred Investment Tax Credits (255)			
54	Deferred Gains from Disposition of Utility Plant (256)			
55	Other Deferred Credits (253)	269		
56	Other Regulatory Liabilities (254)	278		
57	Unamortized Gain on Reacquired Debt (257)	260		
58	Accumulated Deferred Income Taxes (281-283)			
59	TOTAL Deferred Credits (Total of lines 52 thru 58)			
60	TOTAL Liabilities and Other Credits (Total of lines 15, 24, 32, 50, and 59)			

Appendix B Revised Schedules for FERC Forms 1, 1-F, 2, 2-A, and 6

-24-

Name of Respondent	This Report is: (1) ☐ An Original (2) ☐ A Resubmission	Date of Report (Mo, Da, Yr)	Year of Report Dec 31, ____

STATEMENT OF ACCUMULATED COMPREHENSIVE INCOME AND HEDGING ACTIVITIES

1. Report in columns (b) (c) (d) and (e) the amounts of accumulated other comprehensive income items, on a net-of-tax basis, where appropriate.
2. Report in columns (f) and (g) the amounts of other categories of other cash flow hedges.
3. For each category of hedges that have been accounted for as "fair value hedges", report the accounts affected and the related amounts in a footnote.

Line	Item (a)	Unrealized Gains and Losses on available-for-sale securities (B)	Minimum Pension liability Adjustment (net amount) (C)	Foreign Currency Hedges (D)	Other Adjustments (E)
1	Balance of Account 219 at Beginning of Preceding Year				
2	Preceding Year Reclassification from Account 219 to Net Income				
3	Preceding Year Changes in Fair Value				
4	Total (lines 2 and 3)				
5	Balance of Account 219 at End of Preceding Year / Beginning of Current Year				
6	Current Year Reclassification From Account 219 to Net Income				
7	Current Year Changes in Fair Value				
8	Total (lines 7 and 8)				
9	Balance of Account 219 at End of Current Year				

Appendix B Revised Schedules for FERC Forms 1, 1-F, 2, 2-A, and 6

-25-

Name of Respondent	This Report is: (1) An Original (2) A Resubmission	Date of Report (Mo, Da, Yr)	Year of Report Dec 31, _____

STATEMENT OF ACCUMULATED COMPREHENSIVE INCOME, COMPREHENSIVE INCOME, AND HEDGING ACTIVITIES

	Other Cash Flow Hedges [Insert Category] (F)	Other Cash Flow Hedges [Insert Category] (G)	Totals for each category of items recorded in Account 219 (H)	Net Income (Carried Forward from Page 116, Line 63) (I)	Total Comprehensive Income (J)
1					
2					
3					
4					
5					
6					
7					
8					
9					

Appendix B Revised Schedules for FERC Forms 1, 1-F, 2, 2-A, and 6

Name of Respondent	This Report Is: (1) ☐ An Original (2) ☐ A Resubmission	Date of Report (Mo, Da, Yr)	Year of Report Dec. 31, 20___

LIST OF SCHEDULES

Enter in column (d) the terms "none," "not applicable," or "NA," as appropriate, where no information or amounts have been reported for certain pages. Omit pages where the responses are "none," "not applicable," or "NA."

Title of Schedule (a)	Reference Page No. (b)	Date Revised (c)	Remarks (d)
GENERAL CORPORATE INFORMATION AND FINANCIAL STATEMENTS			
General Information	101	ED 12-91	
Control Over Respondent	102	REV 12-95	
Companies Controlled by Respondent	103	NEW 12-95	
Principal General Officers	104	ED 12-91	
Directors	105	REV 12-95	
Important Changes During the Year	108-109	REV 12-95	
Comparative Balance Sheet Statement	110-113	REV 12-01	
Income Statement	114	ED 12-96	
Statement of Accumulated Comprehensive Income and Hedging Activities	115(a)(b)	NEW 12-01	
Appropriated Retained Income	118	REV 12-95	
Unappropriated Retained Income Statement	119	REV 12-95	
Dividend Appropriations of Retained Income	119	REV 12-95	
Statement of Cash Flows	120-121	REV 12-95	
Notes to Financial Statements	122-123	REV 12-95	
BALANCE SHEET SUPPORTING SCHEDULES (Assets and Other Debts)			
Receivables From Affiliated Companies	200	REV 12-00	
General Instructions Concerning Schedules 202 thru 205	201	REV 12-95	
Investments in Affiliated Companies	202-203	ED 12-91	
Investments in Common Stocks of Affiliated Companies	204-205	ED 12-91	
Companies Controlled Directly by Respondent Other Than Through Title to Securities	204-205	ED 12-91	
Instructions for Schedules 212 Thru 217	211	REV 12-00	
Carrier Property	212-213	REV 12-00	
Undivided Joint Interest Property	214-215	REV 12-00	
Accrued Depreciation-Carrier Property	216	REV 12-00	
Accrued Depreciation-Undivided Joint Interest Property	217	REV 12-00	
Amortization Base and Reserve	218-219	REV 12-95	
Noncarrier Property	220	REV 12-00	
Other Deferred Charges	221	REV 12-00	
BALANCE SHEET SUPPORTING SCHEDULES (Liabilities and Other Credits)			
Payables to Affiliated Companies	225	REV 12-00	
Long-Term Debt	226-227	ED 12-00	
Analysis of Federal Income and Other Taxes Deferred	230-231	REV 12-00	
Capital Stock	250-251	REV 12-95	
Capital Stock Changes During the Year	252-253	ED 12-91	
Additional Paid-in Capital	254	ED 12-87	

Appendix B Revised Schedules for FERC Forms 1, 1-F, 2, 2-A, and 6 -27-

Name of Respondent	This Report Is: (1) ☐ An Original (2) ☐ A Resubmission	Date of Report (Mo, Da, Yr)	Year of Report Dec. 31, 20___

COMPARATIVE BALANCE SHEET STATEMENT - ASSETS

For instructions covering this schedule, see the text and instructions pertaining to Balance Sheet Accounts in the USofA. The entries in this balance sheet should be consistent with those in the supporting schedules on the pages indicated.

Line No.	Item (a)	Reference Page No. (b)	Balance at End of Current Year (In dollars) (c)	Balance at End of Previous Year (In dollars) (d)
	CURRENT ASSETS			
1	Cash (10)			
2	Special Deposits (10-5)			
3	Temporary Investments (11)			
4	Notes Receivable (12)			
5	Receivables from Affiliated Companies (13)	200		
6	Accounts Receivable (14)			
7	Accumulated Provision For Uncollectible Accounts (14-5)			
8	Interest and Dividends Receivable (15)			
9	Oil Inventory (16)			
10	Material and Supplies (17)			
11	Prepayment (18)			
12	Other Current Assets (19)			
13	Deferred Income Tax Assets (19-5)	230-231		
14	TOTAL Current Assets *(Total of lines 1 thru 13)*			
	INVESTMENTS AND SPECIAL FUNDS			
	Investments in Affiliated Companies (20):			
15	Stocks	202-203		
16	Bonds	202-203		
17	Other Secured Obligations	202-203		
18	Unsecured Notes	202-203		
19	Investment Advances	202-203		
20	20 Undistributed Earnings from Certain Invest. in Acct.	204		
	Other Investments (21):			
21	Stocks			
22	Bonds			
23	Other Secured Obligations			
24	Unsecured Notes			
25	Investment Advances			
26	Sinking and Other Funds (22)			
27	TOTAL Investment and Special Funds *(Total lines 15 thru 26)*			

Appendix B Revised Schedules for FERC Forms 1, 1-F, 2, 2-A, and 6 -28-

Name of Respondent	This Report Is: (1) ☐ An Original (2) ☐ A Resubmission	Date of Report (Mo, Da, Yr)	Year of Report Dec. 31, 20__

COMPARATIVE BALANCE SHEET STATEMENT - ASSETS (Continued)

1.) For instructions covering this schedule, see the text and instructions pertaining to Balance Sheet Accounts in the USofA. The entries in this balance sheet should be consistent with those in the supporting schedules on the pages indicated.

2.) On line 30, include depreciation applicable to investment in property.

Line No.	Item (a)	Reference Page No. (b)	Balance at End of Current Year (In dollars) (c)	Balance at End of Previous Year (In dollars) (d)
	TANGIBLE PROPERTY			
28	Carrier Property (30)	212-215		
29	(Less) Accrued Depreciation - Carrier Property (31)	216-217		
30	(Less) Accrued Amortization - Carrier Property (32)	218-219		
31	Net Carrier Property *(Line 28 less 29 and 30)*			
32	Operating Oil Supply (33)			
33	Noncarrier Property (34)	220		
34	Less Accrued Depreciation - Noncarrier Property			
35	Net Noncarrier Property *(Line 35 less 36)*			
36	TOTAL Tangible Property *(Total of lines 31, 32 and 35)*			
	OTHER ASSETS AND DEFERRED CHARGES			
37	Organization Costs and Other Intangibles (40)			
38	(Less) Accrued Amortization of Intangibles (41)			
39	Reserved			
40	Miscellaneous Other Assets (43)			
41	Other Deferred Charges (44)	221		
42	Accumulated Deferred Income Tax Assets (45)	230-231		
43	Derivative Instrument Assets (46)			
44	Derivative Instrument Assets - Hedges (47)			
45	TOTAL Other Assets and Deferred Charges *(37 thru 44)*			
46	TOTAL Assets *(Total of lines 14, 27, 36 and 45)*			

Appendix B Revised Schedules for FERC Forms 1, 1-F, 2, 2-A, and 6 -29-

Name of Respondent	This Report Is: (1) ☐ An Original (2) ☐ A Resubmission	Date of Report (Mo, Da, Yr)	Year of Report Dec. 31, 20___

COMPARATIVE BALANCE SHEET STATEMENT - LIABILITIES (Continued)

For instructions covering this schedule, see the text and instructions pertaining to Balance Sheet Accounts in the USofA. The entries in this balance sheet should be consistent with those in the supporting schedules on the pages indicated.

Line No.	Item (a)	Reference Page No. (b)	Balance at End of Current Year (In dollars) (c)	Balance at End of Previous Year (In dollars) (d)
	CURRENT LIABILITIES			
47	Notes Payable (50)			
48	Payables to Affiliated Companies (51)			
49	Accounts Payable (52)			
50	Salaries and Wages Payable (53)			
51	Interest Payable (54)			
52	Dividends Payable (55)			
53	Taxes Payable (56)			
54	Long - Term Debt - Payable Within One Year (57)	226-227		
55	Other Current Liabilities (58)			
56	Deferred Income Tax Liabilities (59)	230-231		
57	TOTAL Current Liabilities *(Total of lines 47 thru 56)*			
	NONCURRENT LIABILITIES			
58	Long-Term Debt - Payable After One Year (60)	226-227		
59	Unamortized Premium on Long-Term Debt (61)			
60	(Less) Unamortized Discount on Long-Term Debt-Dr. (62)			
61	Other Noncurrent Liabilities (63)			
62	Accumulated Deferred Income Tax Liabilities (64)	230-231		
63	Derivative Instrument Liabilities (65)			
64	Derivative Instrument Liabilities - Hedges (66)			
65	TOTAL Noncurrent Liabilities *(Total of lines 58 thru 64)*			
66	TOTAL Liabilities *(Total of lines 57 and 65)*			
	STOCKHOLDERS' EQUITY			
67	Capital Stock (70)	250-251		
68	Premiums on Capital Stock (71)			
69	Capital Stock Subscriptions (72)			
70	Additional Paid-In Capital (73)	254		
71	Appropriated Retained Income (74)	118		
72	Unappropriated Retained Income (75)	119		
73	(Less) Treasury Stock (76)			
74	Accumulated Other Comprehensive Income (77)	115		
75	TOTAL Stockholders' Equity *(Total of lines 67 thru 74)*			
76	TOTAL Liabilities and Stockholders' Equity *(Total of lines 66 and 75)*			

Appendix B Revised Schedules for FERC Forms 1, 1-F, 2, 2-A, and 6

-30-

Name of Respondent	This Report is: (1) ☐ An Original (2) ☐ A Resubmission	Date of Report (Mo, Da, Yr)	Year of Report Dec 31, ____

STATEMENT OF ACCUMULATED COMPREHENSIVE INCOME AND HEDGING ACTIVITIES

1. Report in columns (b) (c) (d) and (e) the amounts of accumulated other comprehensive income items, on a net-of-tax basis, where appropriate.
2. Report in columns (f) and (g) the amounts of other categories of other cash flow hedges.
3. For each category of hedges that have been accounted for as "fair value hedges", report the accounts affected and the related amounts in a footnote.

Line	Item (a)	Unrealized Gains and Losses on available-for-sale securities (B)	Minimum Pension liability Adjustment (net- amount) (C)	Foreign Currency Hedges (D)	Other Adjustments (E)
1	Balance of Account 77 at Beginning of Preceding Year				
2	Preceding Year Reclassification from Account 77 to Net Income				
3	Preceding Year Changes in Fair Value				
4	Total (lines 2 and 3)				
5	Balance of Account 77 at End of Preceding Year / Beginning of Current Year				
6	Current Year Reclassifications From Account 77 to Net Income				
7	Current Year Changes in Fair Value				
8	Total				
9	Balance of Account 77 at End of Current Year				

Name of Respondent	This Report is: (1) An Original (2) A Resubmission	Date of Report *(Mo, Da, Yr)*	Year of Report Dec 31, _____

STATEMENT OF ACCUMULATED COMPREHENSIVE INCOME AND HEDGING ACTIVITIES

	Other Cash Flow Hedges [Insert Category] (F)	Other Cash Flow Hedges [Insert Category] (G)	Totals for each category of items recorded in Account 77 (H)	Net Income (Carried Forward from Page 114, Line 29) (I)	Total Comprehensive Income (J)
1					
2					
3					
4					
5					
6					
7					
8					
9					

[FR Doc. 02–26809 Filed 11–5–02; 8:45 am]
BILLING CODE 6717–01–C

Federal Register

Wednesday,
November 6, 2002

Part III

General Services Administration

41 CFR Parts 101–37 and 102–33
Management of Government Aircraft; Final Rule

GENERAL SERVICES ADMINISTRATION

[FPMR Amendment G–117]

41 CFR Parts 101–37 and 102–33

RIN 3090–AH63

Management of Government Aircraft

AGENCY: Office of Governmentwide Policy, GSA.

ACTION: Final rule.

SUMMARY: The General Services Administration (GSA) is revising the Federal Property Management Regulations (FPMR) by moving coverage on the management of aircraft into the Federal Management Regulation (FMR). A cross-reference is added to the FPMR to direct readers to the coverage in the FMR. The FMR coverage is written in plain language to provide agencies with updated regulatory material that is easy to read and understand.

DATES: *Effective Date:* November 6, 2002.

FOR FURTHER INFORMATION CONTACT: Peter Zuidema, Director, Aircraft Management Policy Division (MTA), 202–219–1377, or *peter.zuidema@gsa.gov.* For information pertaining to status or publication schedules, contact the Regulatory Secretariat, Room 4035, GS Building, Washington, DC, 20405, (202) 208–7312. Please cite FPMR Amendment G–117.

SUPPLEMENTARY INFORMATION:

A. Background

This final rule updates, streamlines, and clarifies FPMR part 101–37 and moves the part into the Federal Management Regulation (FMR). The rule is written in a plain language question and answer format. This style uses an active voice, shorter sentences, and pronouns. Unless otherwise indicated in the text, the pronouns ''we,'' ''you,'' and their variants refer to an executive agency. A question and its answer combine to establish a rule. The employee and the agency must follow the language contained in both the question and its answer.

As the FPMR part 101–37 was amended a number of times over the years, its organization became a patchwork of rules on various subjects. In the new FMR part 102–33, GSA has reorganized and streamlined the content to address the life-cycle of aircraft management, from acquisition through disposal, and to accommodate revised reporting requirements, as follows:

(1) FPMR part 101–37 contained guidance on cost accounting for Government aircraft. GSA has removed this detailed guidance because the information is contained in the Government Aircraft Cost Accounting Guide, published by GSA.

(2) FPMR part 101–37 contained regulations on reporting travel of senior Federal officials, approving travel on Government aircraft, and justifying and approving the use of Government aircraft to carry passengers. Because these regulations are essentially travel-related, GSA is moving them to 41 CFR chapters 300 and 301 of the Federal Travel Regulation (FTR). Both the Aircraft Management Policy Advisory Board, established by GSA in 1997 to assess the status of Federal aviation, and the Interagency Committee for Aviation Policy (ICAP) have endorsed this change.

(3) GSA has modified FPMR 101–37.3, Cost Comparisons for Acquiring and Using Aircraft, to focus on requirements for aircraft fleet modernization, including planning, budgeting, and contracting. This new subpart is titled, ''Acquiring Government Aircraft and Aircraft Parts.''

(4) FPMR part 101–37 contained two separate subparts dealing with ''Accident and Incident Reporting and Investigation'' and a ''Federal Agency Aviation Safety Program.'' GSA has combined and streamlined these two subparts and incorporated them in FMR part 102–33, subpart C, Managing Government Aircraft and Aircraft Parts. This new subpart also incorporates policy contained in the ''Safety Standards Guidelines for Federal Flight Programs,'' which the ICAP formally adopted in December 1998 and revised in December 1999. These ICAP Safety Standards Guidelines lay out the common requirements that executive agencies will follow to develop their own standards for aviation management/administration, operations, maintenance, training, and safety. Armed Forces aircraft follow safety programs established separately.

(5) GSA has clarified and expanded coverage of acquisition, management, and disposal of aircraft parts (particularly Flight Safety Critical Aircraft Parts (FSCAP) and life-limited parts) and included this guidance as appropriate throughout the subparts of the new rule.

(6) Sections 101–37.502 through 101–37.506 of the FPMR described the information that executive agencies were required to report using the old Federal Aviation Management Information System (FAMIS). GSA has closed down FAMIS, which was an outdated computer system, and is operating a new system, the Federal Aviation Interactive Reporting System (FAIRS), to collect, analyze, and report information about Federal aviation programs. The agencies' new responsibilities for reporting through FAIRS are described in subpart E of FMR part 102–33, Reporting Information on Government Aircraft. Both the methods of reporting and some of the information to be reported have changed. The agencies submitted their data to FAMIS using digital media or paper, and they had no ability to query the FAMIS database. Now, users submit their data to FAIRS using the Internet, and agencies may query the FAIRS database on an ad hoc basis or access a set of predefined reports. FAMIS generated five major reports; FAIRS eliminates two of these, the ''Facilities'' and ''Aviation Support Services'' reports.

(7) Two of the ICAP's subcommittees recommended adding a requirement to report aviation accident and incident data. This new requirement is contained in subpart E of FMR 102–33. GSA will collect aviation accident/incident data through an Internet-based system called the ICAP Aviation Accident and Incident Reporting System (AAIRS). Collecting accident and incident information allows GSA and the agencies to generate statistical reports on Federal aviation safety and gives agencies enhanced opportunity to benchmark their safety programs and set performance measures.

(8) In subpart C of FMR 102–33, GSA has added a requirement that the executive agencies disseminate a ''Disclosure Statement for Crewmembers and Qualified Non-Crewmembers Flying on Board Government Aircraft.'' The statement describes the rights and benefits of crewmembers and qualified non-crewmembers who may be killed or injured while working aboard a Government aircraft operated as a public aircraft. The Department of Transportation in their report, ''Development of Plans for Responding to Aviation Disasters Involving Civilians on Government Aircraft'' (March 11, 1999), requested that GSA require the agencies to give this disclosure statement to persons who may fly on Government aircraft that are operated as public aircraft. (Government aircraft flying passengers may not operate as public aircraft per Public Law 106–181.)

Despite the major changes from FPMR part 101–37 described above, the overall purpose of the part is unchanged: to provide guidance and assistance to executive agencies on minimizing costs and improving the management and use of Government aviation resources (following direction to the

Administrator of General Services found in Office of Management and Budget (OMB) Circular A–126, ''Improving the Management and Use of Government Aircraft,'' revised May 22, 1992).

B. Executive Order 12866

GSA has determined that this final rule is not a significant rule for the purposes of Executive Order 12866 of September 30, 1993.

C. Regulatory Flexibility Act

A Regulatory Flexibility Analysis is not required under the Regulatory Flexibility Act, 5 U.S.C. 601, *et seq.*, because there is no requirement that this final rule be published in the **Federal Register** for notice and comment.

D. Paperwork Reduction Act

The Paperwork Reduction Act does not apply because this final rule does not contain any information collection requirements that require the approval of the OMB under 44 U.S.C. 3501, *et seq.*

E. Small Business Regulatory Enforcement Fairness Act

This final rule is exempt from Congressional review prescribed under 5 U.S.C. 801 since it relates solely to agency management and personnel.

List of Subjects

41 CFR Part 101–37

Accounting, Aircraft, Aviation safety, Government property management.

41 CFR Part 102–33

Accounting, Aircraft, Aviation safety, Government property management.

For the reasons set forth in the preamble, GSA amends 41 CFR chapters 101 and 102 as follows:

CHAPTER 101—[AMENDED]

PART 101–37—GOVERNMENT AVIATION ADMINISTRATION AND COORDINATION

1. Revise the Table of Contents for part 101–37 to read as follows:

Sec.

101–37.000 Cross-reference to the Federal Management Regulation (FMR) (41 CFR chapter 102, parts 102–1 through 102–220).

Subpart 101–37.1—Definitions

101–37.100 Definitions.

Subparts 101–37.2–101–37.3 [Reserved]

Subpart 101–37.4—Use of Government-Owned and -Operated Aircraft

101–37.400 General.
101–37.401 [Reserved]
101–37.402 Policy.
101–37.403 Reimbursement for the use of Government aircraft.
101–37.404 Approving the use of Government aircraft for transportation of passengers.
101–37.405 Approving travel on Government aircraft.
101–37.406 Justification of the use of Government aircraft for transportation of passengers.
101–37.407 Documentation.
101–37.408 Reporting travel by senior Federal officials.

Subparts 101–37.5–101–37.14 [Reserved]

2. Revise the authority citation for part 101–37 to read as follows:

Authority: 40 U.S.C. 121(c); 486(c); 31 U.S.C. 101 *et seq.*; Reorganization Plan No. 2 of 1970, 35 FR 7959, 3 CFR, 1966–1970 Comp., p. 1070; Executive Order 11541, 35 FR 10737, 3 CFR 1966–1970 Comp., p. 939; and OMB Circular No. A–126 (Revised May 22, 1992), 57 FR 22150.

3. Revise § 101–37.000 to read as follows:

§ 101–37.000 Cross-reference to the Federal Management Regulation (FMR) (41 CFR chapter 102, parts 102–1 through 102–220).

(a) For information on Government aviation administration and coordination, see FMR part 102–33, Management of Government Aircraft, (41 CFR part 102–33).

(b) For information on travel on Government aircraft, continue to use the following subparts of the FPMR:

(1) Subpart 101–37.1—Definitions.

(2) Subpart 101–37.4—Use of Government-Owned and -Operated Aircraft.

Subparts 101–37.2, 101–37.3, 101–37.5, 101–37.6, 101–37.11, 101–37.12, 101–37.14 [Removed and Reserved]

4. Amend part 101–37 by removing and reserving subparts 101–37.2, 101–37.3, 101–37.5, 101–37.6, 101–37.11, 101–37.12, 101–37.14.

CHAPTER 102—[AMENDED]

5. Part 102–33 is added to subchapter B to read as follows:

PART 102–33—MANAGEMENT OF GOVERNMENT AIRCRAFT

Subpart A—How These Rules Apply

General

Sec.

102–33.5 To whom do these rules apply?
102–33.10 May we request approval to deviate from these rules?
102–33.15 How does this part relate to the Federal Aviation Regulations?
102–33.20 What definitions apply to this part?

Responsibilities

102–33.25 What are our responsibilities under this part?
102–33.30 What are the duties of an agency's Senior Aviation Management Official (SAMO)?
102–33.35 How can we get help in carrying out our responsibilities?
102–33.40 What are GSA's responsibilities for Federal aviation management?

Subpart B—Acquiring Government Aircraft and Aircraft Parts

Overview

102–33.45 What is a Government aircraft?
102–33.50 Under what circumstances may we acquire Government aircraft?
102–33.55 Are there restrictions on acquiring Government aircraft?
102–33.60 What methods may we use to acquire Government aircraft?
102–33.65 What is the process for acquiring Government aircraft?

Planning to Acquire Government Aircraft

102–33.70 What directives must we follow when planning to acquire Government aircraft?
102–33.75 What other guidance is available to us in planning to acquire Government aircraft?

OMB Circular A–76

102–33.80 Must we comply with OMB Circular A–76 before we acquire Government aircraft?
102–33.85 Where should we send our OMB Circular A–76 Cost-Comparison Studies?

The Process for Budgeting to Acquire Government Aircraft

102–33.90 What is the process for budgeting to acquire a Federal aircraft (including a Federal aircraft transferred from another executive agency)?
102–33.95 What is the process for budgeting to acquire commercial aviation services (CAS)?

Contracting to Acquire Government Aircraft

102–33.100 What are our responsibilities when contracting to purchase or lease-purchase a Federal aircraft or to award a CAS contract?
102–33.105 What special requirements must we put into our CAS contracts?

Acquiring Aircraft Parts

102–33.110 What are our responsibilities when acquiring aircraft parts?
102–33.115 Are there special requirements for acquiring military Flight Safety Critical Aircraft Parts (FSCAP)?
102–33.120 Are there special requirements for acquiring life-limited parts?

Subpart C—Managing Government Aircraft and Aircraft Parts

Overview

102–33.125 If we use Federal aircraft, what are our management responsibilities?
102–33.130 If we hire CAS, what are our management responsibilities?
102–33.135 Do we have to follow the direction in OMB Circular A–123, ''Management Accountability and

Control,'' June 21, 1995, for establishing management controls for our aviation program?

Establishing Flight Program Standards

102–33.140 What are Flight Program Standards?
102–33.145 Why must we establish Flight Program Standards?
102–33.150 Is any agency exempt from establishing Flight Program Standards under this part?
102–33.155 How must we establish Flight Program Standards?

Management/Administration

102–33.160 What standards must we establish or require (contractually, where applicable) for management/administration of our flight program?

Operations

102–33.165 What standards must we establish or require (contractually, where applicable) for operation of our flight program?

Maintenance

102–33.170 What standards must we establish or require (contractually, where applicable) for maintenance of our Government aircraft?

Training

102–33.175 What standards must we establish or require (contractually, where applicable) to train our flight program personnel?

Safety

102–33.180 What standards must we establish or require (contractually, where applicable) for flight program safety?
102–33.185 What standards must we establish or require (contractually, where applicable) for responding to aircraft accidents and incidents?

Accounting for the Cost of Government Aircraft

102–33.190 What are the aircraft operations and ownership costs for which we must account?
102–33.195 Do we need an automated system to account for aircraft costs?
102–33.200 Must we periodically justify owning and operating Federal aircraft?
102–33.205 When we use our aircraft to support other executive agencies, must we recover the operating costs?

Accounting for the Use of Government Aircraft

102–33.210 How do we account for the use of our Government aircraft?
102–33.215 May we use Government aircraft to carry passengers?
102–33.220 What are the responsibilities of an agency's aviation program in justifying the use of a Government aircraft to transport passengers?

Managing Aircraft Parts

102–33.225 How must we manage aircraft parts?
102–33.230 May we use military FSCAP on non-military FAA-type certificated Government aircraft?
102–33.235 What documentation must we maintain for life-limited parts and FSCAP?

Subpart D—Disposing of Government Aircraft and Aircraft Parts

Overview

102–33.240 What must we consider before disposing of aircraft and aircraft parts?
102–33.245 May we report as excess, or replace (*i.e.*, by exchange/sale), both operational and non-operational aircraft?
102–33.250 May we report as excess, or replace, declassified aircraft?
102–33.255 Must we document FSCAP or life-limited parts installed on aircraft that we will report as excess or replace?
102–33.260 When we report as excess, or replace, an aircraft (including a declassified aircraft), must we report the change in inventory to the Federal Aviation Interactive Reporting System (FAIRS)?

Reporting Excess Government Aircraft

102–33.265 What are our options if aircraft are excess to our needs?
102–33.270 What is the process for reporting an excess aircraft?

Replacing Aircraft Through Exchange or Sale

102–33.275 Are there restrictions on replacing aircraft by exchange or sale?
102–33.280 What are our options if we need a replacement aircraft?
102–33.285 Do we need to include any special disclaimers in our exchange/sale agreements for uncertificated aircraft or aircraft that we have operated as public aircraft (*i.e.*, not in compliance with the Federal Aviation Regulations, 14 CFR chapter I)?
102–33.290 What other disclaimers must we include in our exchange/sale agreements for aircraft?
102–33.295 May we exchange or sell an aircraft through reimbursable transfer to another executive agency?

Disposing of Aircraft Parts

102–33.300 What must we consider before disposing of aircraft parts?
102–33.305 May we report as excess, or replace, FSCAP and life-limited parts?
102–33.310 May we report as excess, or replace, unsalvageable aircraft parts?
102–33.315 What are the procedures for mutilating unsalvageable aircraft parts?
102–33.320 What must we do if we are unable to perform required mutilation of aircraft parts?
102–33.325 What documentation must we furnish with excess/surplus or replaced parts when they are transferred, donated, exchanged, or sold?

Reporting Excess Aircraft Parts

102–33.330 What must we do with aircraft parts that are excess to our needs?
102–33.335 What are the receiving agency's responsibilities in the transfer or donation of aircraft parts?
102–33.340 What are GSA's responsibilities in disposing of excess and surplus aircraft parts?
102–33.345 What are a State agency's responsibilities in the donation of Federal Government aircraft parts?

Replacing Aircraft Parts Through Exchange or Sale

102–33.350 Do we need approval from GSA to replace aircraft parts by exchange or sale?
102–33.355 May we do a reimbursable transfer of parts with another executive agency?
102–33.360 What is the process for selling or exchanging aircraft parts for replacement?
102–33.365 Must we report exchange or sale of parts to FAIRS?

Special Requirements for Disposing of Flight Safety Critical Aircraft Parts (FSCAP) and Life-Limited Parts

102–33.370 What must we do to dispose of military FSCAP or life-limited parts?
102–33.375 What is a FSCAP Criticality Code?

Subpart E—Reporting Information on Government Aircraft

Overview

102–33.380 Who must report information to GSA on Government aircraft?
102–33.385 Is any civilian executive agency exempt from the requirement to report information to GSA on Government aircraft?
102–33.390 What information must we report on Government aircraft?

Federal Aviation Interactive Reporting System (FAIRS)

102–33.395 What is FAIRS?
102–33.400 How must we report to FAIRS?
102–33.405 When must we report to FAIRS?

Federal Inventory Data

102–33.410 What are Federal inventory data?
102–33.415 When may we declassify an aircraft and remove it from our Federal aircraft inventory?
102–33.420 How must we declassify an aircraft?

Federal Aircraft Cost and Utilization Data

102–33.425 What Federal aircraft cost and utilization data must we report?
102–33.430 Who must report Federal aircraft cost and utilization data?

Commercial Aviation Services (CAS) Cost and Utilization Data

102–33.435 What CAS cost and utilization data must we report?
102–33.440 Who must report CAS cost and utilization data?

Accident and Incident Data

102–33.445 What accident and incident data must we report?
102–33.450 How must we report accident and incident data?

Common Aviation Management Information Standard (C–AMIS)

102–33.455 What is C–AMIS?

102–33.460 What is our responsibility in relation to C–AMIS?

Authority: 40 U.S.C. 121(c); 31 U.S.C. 101 *et seq.*; Reorganization Plan No. 2 of 1970, 35 FR 7959, 3 CFR, 1066–1970 Comp., p. 1070; Executive Order 11541, 35 FR 10737, 3 CFR, 1966–1970 Comp., p. 939; and OMB Circular No. A–126 (Revised May 22, 1992), 57 FR 22150.

Subpart A—How These Rules Apply

General

§ 102–33.5 To whom do these rules apply?

The rules in this part apply to all federally funded aviation activities of executive agencies of the U.S. Government, except those listed in paragraphs (a), (b), (c), and (d) of this section, who use Government aircraft to accomplish their official business.

(a) The Armed Forces are exempt from all but—

(1) Section 102–33.25(e) and (g), which concern responsibilities related to the Interagency Committee for Aviation Policy (ICAP); and

(2) Subpart D of this part.

(b) The President or Vice President and their offices are exempt.

(c) When an executive agency provides Government-furnished avionics for commercially owned or privately owned aircraft for the purpose of technology demonstration or testing, those aircraft are exempt.

(d) Privately owned aircraft that agency personnel use for official travel (even though such use is federally funded) are exempt.

§ 102–33.10 May we request approval to deviate from these rules?

Yes, see §§ 102–2.60 through 102–2.110 of subchapter A of this chapter for guidance on requesting a deviation from the requirements in this part. GSA may not grant deviations from the requirements in OMB Circular A–126, ''Improving the Management of Government Aircraft,'' revised May 22, 1992. You should consult with GSA's Aircraft Management Policy Division (MTA) before you request a deviation. Also, you should fax a copy of your letter of request to MTA at 202–501–6742 at the same time you mail it to GSA's Regulatory Secretariat (see § 102–2.90 of subchapter A of this chapter). In most cases, GSA will respond to your written request within 30 days.

§ 102–33.15 How does this part relate to the Federal Aviation Regulations?

This part does not supersede any of the regulations in 14 CFR chapter I (Federal Aviation Regulations).

§ 102–33.20 What definitions apply to this part?

The following definitions apply to this part:

Acquisition date means the date that the acquiring executive agency took responsibility for the aircraft, *e.g.*, received title (through purchase, exchange, or gift), signed a bailment agreement with the Department of Defense (DOD), took physical custody (in the case of reassignment or interagency transfer), received a court order (in the case of forfeiture), put into operational status an aircraft that is newly manufactured by the agency, or otherwise accepted physical transfer (for example, in the case of a borrowed aircraft).

Aircraft Management Policy Division (MTA) is a division in the Office of Transportation and Personal Property, Office of Governmentwide Policy, GSA. Contact MTA staff at 1800 F Street, NW., Washington, DC 20405, Room 1221; (202) 501–4866; fax (202) 501–6742; Web site at *http://www.gsa.gov/aircraftpolicy.*

Aircraft part means an individual component or an assembly of components that is primarily designated for and used on aircraft.

Armed Forces means the Army, Navy, Air Force, Marine Corps, and Coast Guard, including their regular and Reserve components and members serving without component status. For purposes of this part, the National Guard is also included in the Armed Forces.

Aviation life support equipment (ALSE) means equipment that protects flight crewmembers and others aboard an aircraft, assisting their safe escape, survival, and recovery during an accident or other emergency.

Bailed aircraft means a Federal aircraft that is owned by one executive agency, but is in the custody of and operated by another executive agency under an agreement that may or may not include cost-reimbursement. Bailments are executive agency-to-executive agency agreements and involve only aircraft, not services.

Borrowed aircraft means an aircraft owned by a non-executive agency and provided to an executive agency for use without compensation. The executive agency operates and maintains the aircraft.

Chartered aircraft means an aircraft that an executive agency hires commercially under a contractual agreement specifying performance and one-time exclusive use. The commercial source operates and maintains a charter aircraft. A charter is one form of a full service contract.

Commercial aviation services (CAS) include—

(1) Leasing aircraft for exclusive use or lease-purchasing an aircraft with the intent of taking title;

(2) Chartering or renting aircraft for exclusive use;

(3) Contracting for full services (*i.e.*, aircraft and related aviation services for exclusive use) or obtaining full services through an inter-service support agreement (ISSA); or

(4) Obtaining related aviation services (*i.e.*, services but not aircraft) by commercial contract or ISSA, except those services acquired to support a Federal aircraft.

Crewmember means a person assigned to operate or assist in operating an aircraft during flight time. Crewmembers perform duties directly related to the operation of the aircraft (*e.g.*, as pilots, co-pilots, flight engineers, navigators) or duties assisting in operation of the aircraft (*e.g.*, as flight directors, crew chiefs, electronics technicians, mechanics). For related terms, see *Qualified non-crewmember* and *Passenger* elsewhere in this section.

Criticality code means a single digit code that DOD assigns to military Flight Safety Critical Aircraft Parts (FSCAP) (see § 102–33.370).

Data plate means a fireproof plate that is inscribed with certain information required by the Federal Aviation Regulations (14 CFR part 45) and secured to an aircraft, aircraft engine, propeller, or propeller blade. The information must be marked by etching, stamping, engraving, or other approved method of fireproof marking. The plate must be attached in such a manner that it is not likely to be defaced or removed during normal service or lost or destroyed in an accident. Data plates are required only on certificated aircraft; however, uncertificated aircraft may also have data plates.

Declassify means to remove a non-operational aircraft from the Federal aircraft inventory. Agencies may declassify only non-operational aircraft that they will retain for ground use only. Agencies must declassify an aircraft following the rules in §§ 102–33.415 and 102–33.420.

Disposal date means the date that the disposing executive agency relinquishes responsibility for an aircraft, for example, when the agency transfers title in the case of a sale or exchange; returns the aircraft to the lessor or bailer; declassifies it (for FAIRS, declassification is considered a ''disposal'' action, even though the agency retains the property); or relinquishes custody to another agency

(*i.e.*, in the case of excess (transferred) or surplus (donated or sold) aircraft).

Donated aircraft means an aircraft disposed of as surplus by GSA through donation to a non-federal government, a tax-exempt nonprofit entity, or other eligible recipient, following the rules in part 102–37 of this subchapter. (Some agencies, for example DOD, may have independent donation authority.)

Exclusive use means a condition under which—

(1) An aircraft is operated for the sole benefit of the U.S. Government; and

(2) The executive agency using the aircraft has operational control of the aircraft and the authority to define departure times, origins and destinations of flights, and payloads, passengers, and cargo.

Executive agency means any executive department or independent establishment in the executive branch of the United States Government, including any wholly owned Government corporation. See 40 U.S.C. 472(a).

Federal Acquisition Regulation (48 CFR chapter 1, parts 1 through 53) is a codified regulation of the U.S. Government that provides uniform policies and procedures for acquisition of personal property and services by executive agencies.

Federal aircraft means an aircraft that an executive agency owns (*i.e.*, holds title to) or borrows for any length of time. When an executive agency loans or bails an aircraft that meets the criteria for Federal aircraft, that loaned or bailed aircraft is still considered a Federal aircraft in the owning agency's inventory except when DOD is the owning agency of a bailed aircraft. In that case, the aircraft is recorded in the inventory of the bailee.

Federal Aviation Interactive Reporting System (FAIRS). (See §§ 102–33.395 through 102–33.440.)

Federal Aviation Regulation (14 CFR chapter I) is a codified publication of the U.S. Government that describes uniform policies and procedures for regulating aviation within the national airspace system.

Federal Supply Service (FSS) is a component of GSA. FSS is organized by geographical regions. The FSS Property Management Division in GSA's Region 9, 450 Golden Gate Ave., 9FBP, San Francisco, CA 94102–3434, (415) 522–3029, has responsibility for disposing of excess and surplus aircraft.

Federal Travel Regulation (FTR) (41 CFR chapters 300–304) is a codified publication of the U.S. Government that describes uniform policies and procedures for managing travel of the executive agencies.

Flight Safety Critical Aircraft Part (FSCAP) means any military aircraft part, assembly, or installation containing a critical characteristic whose failure, malfunction, or absence could cause a catastrophic failure resulting in loss or serious damage to the aircraft or an uncommanded engine shut-down resulting in an unsafe condition.

Forfeited aircraft means an aircraft acquired by the Government either by summary process or by order of a court of competent jurisdiction pursuant to any law of the United States.

Full service contract means a contractual agreement through which an executive agency acquires an aircraft and related aviation services (for example, pilot, crew, maintenance, catering) for exclusive use. Aircraft hired under full service contracts are commercial aviation services (CAS), not Federal aircraft, regardless of the length of the contract.

Government aircraft means an aircraft that is operated for the exclusive use of an executive agency and is a—

(1) Federal aircraft, which an executive agency owns, bails, loans, or borrows; or

(2) Commercial aircraft hired as commercial aviation services (CAS), which an executive agency—

(i) Leases or lease-purchases with the intent to take title;

(ii) Charters or rents; or

(iii) Hires as part of a full service contract or an inter-service support agreement (ISSA).

Government Aircraft Cost Accounting Guide (CAG) means guidance published by GSA based on the cost elements defined in Attachments A and B to OMB Circular A–126 and in OMB Circular A–76, FAIRS, and the U.S. Government Standard General Ledger to account for Government aircraft costs.

Governmental function means a federally funded activity that an executive agency performs in compliance with its statutory authorities.

Intelligence agencies mean the following agencies or organizations within the U.S. intelligence community:

(1) Central Intelligence Agency.

(2) National Security Agency.

(3) Defense Intelligence Agency.

(4) National Reconnaissance Office.

(5) The Bureau of Intelligence and Research of the Department of State.

(6) Intelligence elements of the Army, Navy, Air Force, Marine Corps, Department of Justice, Department of the Treasury, and Department of Energy.

Inter-service support agreement (ISSA) means any agreement between two or more executive agencies (including the Department of Defense) in which one agency consents to perform aviation support services (*i.e.*, providing an aircraft and other aviation services or providing only services) for another agency with or without cost-reimbursement. An executive agency-to-executive agency agreement that involves only the use of an aircraft, not services, is a bailment, not an ISSA.

Leased aircraft means an aircraft hired under a commercial contractual agreement in which an executive agency has exclusive use of the aircraft for an agreed upon period of time. The acquiring executive agency operates and maintains the aircraft. Leased aircraft are hired as commercial aviation services (CAS).

Lease-purchase aircraft means a leased aircraft for which the leasing executive agency holds an option to purchase.

Life-limited part means any aircraft part that has an established replacement time, inspection interval, or other time-related procedure associated with it. For non-military parts, FAA specifies life-limited parts' airworthiness limitations in 14 CFR chapter I, §§ 21.50, 23.1529, 25.1529, 27.1529, 29.1529, 31.82, 33.4, and 35.5, and on product Type Certificate Data Sheets (TCDS) for products certified before airworthiness limitations were added to 14 CFR chapter I. Letters authorizing Technical Standards Orders (TSO) must also note or reference mandatory replacement or inspection of parts.

Loaned aircraft means a Federal aircraft owned by an executive agency, but in the custody of a non-executive agency under an agreement that does not include compensation.

Military aircraft part means an aircraft part used on an uncertificated aircraft that was developed for the Armed Forces.

Non-operational aircraft means a Federal aircraft that is not safe for flight and, in the owning executive agency's determination, cannot economically be made safe for flight. This definition refers to the aircraft's flight capability, not its mission-support equipment capability. An aircraft that is temporarily out of service for maintenance or repair and can economically be made safe for flight is considered operational.

Official Government business, in relation to Government aircraft—

(1) Includes, but is not limited to—

(i) Carrying crewmembers, qualified non-crewmembers, and cargo directly required for or associated with performing Governmental functions (including travel-related Governmental functions);

(ii) Carrying passengers authorized to travel on Government aircraft (see OMB Circular A–126); and

(iii) Training pilots and other aviation personnel.

(2) Does not include—

(i) Using Government aircraft for personal or political purposes, except for required use travel and space available travel as defined in OMB Circular A–126; or

(ii) Carrying passengers who are not officially authorized to travel on Government aircraft.

Operational aircraft means a Federal aircraft that is safe for flight or, in the owning executive agency's determination, can economically be made safe for flight. This definition refers to the aircraft's flight capability, not its mission-support capability. An aircraft temporarily out of service for maintenance or repair is considered operational.

Original equipment manufacturer means the person or company who originally designed, engineered, and manufactured, or who currently holds the data rights to manufacture, a specific aircraft or aircraft part.

Owned aircraft means an aircraft for which title or rights of title are vested in an executive agency. Owned aircraft are considered Federal aircraft.

Passenger means a person flying onboard a Government aircraft who is officially authorized to travel and who is not a crewmember or qualified non-crewmember.

Production approval holder means the person or company who holds a Production Certificate (PC), Approved Production Inspection System (APIS), Parts Manufacturer Approval (PMA), or Technical Standards Order (TSO) authorization, issued under provisions of 14 CFR part 21, Certification Procedures for Products and Parts, and who controls the design and quality of a specific aircraft part.

Qualified non-crewmember means a person flying onboard a Government aircraft whose skills or expertise are required to perform or are associated with performing the Governmental function for which the aircraft is being operated (qualified non-crewmembers may be researchers, law enforcement agents, fire fighters, agricultural engineers, biologists, etc.). *Qualified non-crewmembers* are not passengers.

Registration mark means the unique identification mark that is assigned by the Federal Aviation Administration and displayed on Government aircraft (including foreign aircraft hired as CAS). *Tail number* is commonly used for *registration mark.*

Related aviation services contract means a commercial contractual agreement through which an executive agency hires aviation services only (not aircraft), *e.g.*, pilot, crew, maintenance, cleaning, dispatching, or catering.

Rental aircraft means an aircraft hired commercially under an agreement in which the executive agency has exclusive use of the aircraft for an agreed upon period of time. The executive agency operates, but does not maintain, a rental aircraft.

Required use means use of a Government aircraft for the travel of an executive agency officer or employee to meet bona fide communications or security needs of the agency or to meet exceptional scheduling requirements. Required use travel must be approved as described in OMB Circular A–126.

Risk analysis and management means a systematic process for—

(1) Identifying risks associated with alternative courses of action involved in an aviation operation; and

(2) Choosing from among these alternatives the course(s) of action that will promote optimum aviation safety.

Safe for flight means approved for flight and refers to an aircraft, aircraft engine, propeller, appliance, or part that has been inspected and certified to meet the requirements of applicable regulations, specifications, or standards. When applied to an aircraft that an executive agency operates under the Federal Aviation Regulations (14 CFR chapter I), safe for flight means ''airworthy,'' *i.e.*, the aircraft or related parts meet their type designs and are in a condition, relative to wear and deterioration, for safe operation. When applied to an aircraft that an executive agency uses, but does not operate or require to be operated under the Federal Aviation Regulations, safe for flight means a state of compliance with military specifications or the executive agency's own Flight Program Standards, and as approved, inspected, and certified by the agency.

Senior Aviation Management Official means the person in an executive agency who will be the agency's primary member of the Interagency Committee for Aviation Policy (ICAP). This person must be of appropriate grade and position to represent the agency and promote flight safety and adherence to standards.

Serviceable aircraft part means a part that is safe for flight, can fulfill its operational requirements, and is sufficiently documented to indicate that the part conforms to applicable standards/specifications.

Suspected unapproved part means a non-military aircraft part, component, or material that any person suspects of not meeting the requirements of an ''approved part.'' Approved parts are those that are produced in compliance with the Federal Aviation Regulations (14 CFR part 21), are maintained in compliance with 14 CFR parts 43 and 91, and meet applicable design standards. A part, component, or material may be suspect because of its questionable finish, size, or color; improper (or lack of) identification; incomplete or altered paperwork; or any other questionable indication. See detailed guidance in FAA Advisory Circular 21–29, ''Detecting and Reporting Suspected Unapproved Parts,'' available from FAA at *http://www.faa.gov.*

Tail number (See *registration mark*).

Traceable part means an aircraft part whose original equipment manufacturer or production approval holder can be identified by documentation, markings/characteristics on the part, or packaging of the part. Non-military parts are traceable if you can establish that the parts were manufactured under rules in 14 CFR part 21 or were previously determined to be airworthy under rules in 14 CFR part 43. Possible sources for making a traceability determination could be shipping tickets, bar codes, invoices, parts marking (*e.g.*, PMA, TSO), data plates, serial/part numbers, manufacturing production numbers, maintenance records, work orders, etc.

Training means instruction for flight program personnel to enable them to qualify initially for their positions and to maintain qualification for their positions over time.

Travel Management Policy Division (MTT) means GSA's Office of Transportation and Personal Property, Office of Governmentwide Policy. MTT is responsible for publishing the Federal Travel Regulation (41 CFR chapters 300 through 304), which contains policy for management of travel of U.S. Government personnel and certain others. Contact the MTT staff at 1800 F Street, NW., Washington, DC 20405, Room G–219; (202) 501–1538; see their Web site at *http://www.gsa.gov/travelpolicy.*

Unsalvageable aircraft part means an aircraft part that cannot be restored to a condition that is safe for flight because of its age, its physical condition, a non-repairable defect, insufficient documentation, or its non-conformance with applicable standards/specifications.

Responsibilities

§ 102–33.25 What are our responsibilities under this part?

Under this part, your responsibilities are to—

(a) Acquire, manage, and dispose of Government aircraft (*i.e.*, Federal aircraft and commercial aviation services (CAS); see § 102–33.45) as safely, efficiently, and effectively as possible consistent with the nature of your agency's aviation missions;

(b) Document and report the—

(1) Types and numbers of your Federal aircraft;

(2) Costs of acquiring and operating Government aircraft;

(3) Amount of time that your agency uses Government aircraft; and

(4) Accidents and incidents involving Government aircraft;

(c) Ensure that your Government aircraft are used only to accomplish your agency's official Government business;

(d) Ensure that all passengers traveling on your agency's Government aircraft are authorized to travel on such aircraft (see OMB Circular A–126);

(e) Appoint (by letter to the Associate Administrator, Office of Governmentwide Policy, GSA) a Senior Aviation Management Official (SAMO), who will be your agency's primary member of the Interagency Committee for Aviation Policy (ICAP) (this paragraph (e) applies to all executive agencies that use aircraft, including the Department of Defense (DOD), the Federal Aviation Administration (FAA), and the National Transportation Safety Board (NTSB);

(f) Designate an official (by letter to the Associate Administrator, Office of Governmentwide Policy, GSA) to certify the accuracy and completeness of information reported by your agency through the Federal Aviation Interactive Reporting System (FAIRS) (this official may be the SAMO or may be another individual who has the appropriate authority). (Armed Forces agencies, which include DOD and the U.S. Coast Guard, are not required to report information to FAIRS.);

(g) Appoint representatives of the agency as members of ICAP subcommittees and working groups; and

(h) Ensure that your agency's internal policies and procedures are consistent with the requirements of OMB Circulars A–126 and A–76 and this part.

§ 102–33.30 What are the duties of an agency's Senior Aviation Management Official (SAMO)?

The SAMO's duties are to—

(a) Represent the agency's views to the ICAP and vote on behalf of the agency as needed; contribute technical and operational policy expertise to ICAP deliberations and activities; and serve as the designated approving official for FAIRS when the agency elects to have one person serve as both the SAMO and the designated official for FAIRS (DOD will not have a designated official for FAIRS); and

(b) Appoint representatives of the agency as members of ICAP subcommittees and working groups.

§ 102–33.35 How can we get help in carrying out our responsibilities?

To get help in carrying out your responsibilities under this part, you may—

(a) Call or write to GSA's Aircraft Management Policy Division (MTA) (see § 102–33.20); or

(b) Find more information on the Internet from the following Web sites:

(1) *http://www.gsa.gov/aircraftpolicy* (GSA Aircraft Management Policy Division).

(2) *http://www.gsa.gov/travelpolicy* (GSA Travel Management Policy Division).

§ 102–33.40 What are GSA's responsibilities for Federal aviation management?

Under OMB Circular A–126, ''Improving the Management and Use of Government Aircraft,'' revised May 22, 1992 (available from *http://www.whitehouse.gov/omb),* GSA's chief responsibilities for Federal aviation management are to maintain—

(a) A single office (*i.e.*, MTA) for developing policy for improving the management of Federal aviation, including acquisition, operation, safety, and disposal of Government aircraft, and publishing that policy;

(b) An interagency committee (*i.e.*, the ICAP), whose members represent the executive agencies that use Government aircraft to conduct their official business (including FAA and NTSB specifically) and advise GSA on developing policy for managing Government aircraft; and

(c) A management information system to collect, analyze, and report information on the inventory, cost, usage, and safety of Government aircraft.

Note to § 102–33.40: See OMB Circular A–126 for a complete listing of GSA's responsibilities related to Federal aviation.

Subpart B—Acquiring Government Aircraft and Aircraft Parts

Overview

§ 102–33.45 What is a Government aircraft?

A Government aircraft is one that is operated for the exclusive use of an executive agency and is a—

(a) Federal aircraft, which an executive agency owns, bails, loans, or borrows; or

(b) Commercial aircraft hired as commercial aviation services (CAS), which an executive agency—

(1) Leases or lease-purchases with the intent to take title;

(2) Charters or rents; or

(3) Hires as part of a full service contract or an inter-service support agreement (ISSA).

§ 102–33.50 Under what circumstances may we acquire Government aircraft?

Your agency may acquire Government aircraft when you meet the requirements for operating an in-house aviation program contained in OMB Circular A–76, ''Performance of Commercial Activities,'' August 4, 1983 (available from *http://www.whitehouse.gov/omb),* and when—

(a) For Federal aircraft—

(1) Aircraft are the optimum means of supporting your agency's official business;

(2) You do not have aircraft that can support your agency's official business safely (*i.e.*, in compliance with applicable safety standards and regulations) and cost-effectively;

(3) No commercial or other Governmental source is available to provide aviation services safely (*i.e.*, in compliance with applicable safety standards and regulations) and cost-effectively; and

(4) Congress has specifically authorized your agency to purchase, lease, or transfer aircraft and to maintain and operate those aircraft (see 31 U.S.C. 1343).

(b) For commercial aviation services (CAS)—

(1) Aircraft are the optimum means of supporting your agency's official business; and

(2) Using commercial aircraft and services is safe (*i.e.*, conforms to applicable laws, safety standards, and regulations) and is more cost effective than using Federal aircraft, aircraft from any other Governmental source, or scheduled air carriers.

§ 102–33.55 Are there restrictions on acquiring Government aircraft?

Yes, you may not acquire—

(a) More aircraft than you need to carry out your official business;

(b) Aircraft of greater size or capacity than you need to perform your Governmental functions cost-effectively; or

(c) Federal aircraft that Congress has not authorized your agency to acquire or Federal aircraft or commercial aircraft and services for which you have not followed the requirements in OMB Circular A–76.

§ 102–33.60 What methods may we use to acquire Government aircraft?

Following the requirements of §§ 102–33.50 and 102–33.55, you (or an internal bureau or sub-agency within your agency) may acquire Government aircraft by means including, but not limited to—

(a) Purchase;

(b) Borrowing from a non-federal source;

(c) Bailment from another executive agency;

(d) Exchange/sale (but only with approval from GSA; see § 102–33.275);

(e) Reimbursable transfer from another executive agency (see §§ 102–36.75 through 102–36.85 of this subchapter B);

(f) Transfer from another executive agency as approved by GSA;

(g) Reassignment from one internal bureau or subagency to another within your agency;

(h) Forfeiture (you must have specific authority to seize aircraft);

(i) Insurance replacement (*i.e.*, receiving a replacement aircraft);

(j) Lease or lease-purchase;

(k) Rent or charter;

(l) Contract for full services (*i.e.*, aircraft plus crew and related aviation services) from a commercial source; or

(m) Inter-service support agreements with other executive agencies for aircraft and services.

§ 102–33.65 What is the process for acquiring Government aircraft?

Acquiring aircraft generally follows a three-step process; planning, budgeting, and contracting, as described in §§ 102–33.70 through 102–33.105.

Planning To Acquire Government Aircraft

§ 102–33.70 What directives must we follow when planning to acquire Government aircraft?

When planning to acquire aircraft, you must follow the requirements in—

(a) 31 U.S. Code Section 1343, ''Buying and Leasing Passenger Motor Vehicles and Aircraft'';

(b) OMB Circular A–126, ''Improving the Management and Use of Government Aircraft,'' revised May 22, 1992;

(c) OMB Circular A–11, Part 7, ''Planning, Budgeting, Acquisition, and Management of Capital Assets,'' revised June 2002;

(d) OMB Circular A–76, ''Performance of Commercial Activities,'' revised June 14, 1999; and

(e) OMB Circular A–94, ''Guidelines and Discount Rates for Benefit-Cost Analysis of Federal Programs,'' revised January 22, 2002.

Note to § 102–33.70: OMB Circulars are available from *http://www.whitehouse.gov/omb*.

§ 102–33.75 What other guidance is available to us in planning to acquire Government aircraft?

You can find guidance for acquisition planning in the ''ICAP Fleet Modernization Planning Guide,'' which is available from GSA, Aircraft Management Policy Division (MTA), 1800 F Street, NW., Washington, DC 20405, and in OMB's ''Capital Programming Guide,'' which is a supplement to OMB Circular A–11.

OMB Circular A–76

§ 102–33.80 Must we comply with OMB Circular A–76 before we acquire Government aircraft?

Yes, before you acquire Government aircraft, you must comply with OMB Circular A–76 to assure that the private sector cannot provide Government aircraft or related aviation services more cost-effectively than you can provide Federal aircraft and related services (see particularly the Circular's Revised Supplemental Handbook's Appendix 6, Aviation Competitions).

§ 102–33.85 Where should we send our OMB Circular A–76 Cost-Comparison Studies?

You should forward copies of the completed A–76 Cost-Comparison studies to OMB upon request or as required by OMB Circular A–11 to justify aircraft purchases and to GSA, Aircraft Management Policy Division (MTA), 1800 F Street, NW., Washington, DC 20405, upon completion of a study.

The Process for Budgeting To Acquire Government Aircraft

§ 102–33.90 What is the process for budgeting to acquire a Federal aircraft (including a Federal aircraft transferred from another executive agency)?

(a) The process for budgeting to acquire a Federal aircraft or to accept a Federal aircraft transferred from another executive agency requires that you have specific authority from Congress in your appropriation, as called for in 31 U.S.C. 1343, to—

(1) Purchase, lease-purchase, or lease a Federal aircraft and to operate and maintain it; or

(2) Accept a Federal aircraft transferred from another executive agency and to operate and maintain it.

(b) For complete information on budgeting to own Government aircraft (*i.e.*, large purchase of a capital asset), see OMB Circular A–11, Part 7, and the ''Capital Programming Guide,'' Supplement to Part 7, Appendix 7.

§ 102–33.95 What is the process for budgeting to acquire commercial aviation services (CAS)?

Except for leases and lease-purchases, for which you must have specific Congressional authorization as required under 31 U.S.C. 1343, you may budget to fund your commercial aviation services (CAS) hires out of your agency's operating budget.

Contracting To Acquire Government Aircraft

§ 102–33.100 What are our responsibilities when contracting to purchase or lease-purchase a Federal aircraft or to award a CAS contract?

In contracting to purchase or lease-purchase a Federal aircraft or to award a CAS contract, you must follow the Federal Acquisition Regulation (48 CFR chapter 1) unless your agency is exempt from following the Federal Acquisition Regulation.

§ 102–33.105 What special requirements must we put into our CAS contracts?

At a minimum, your contracts and agreements must require that any provider of CAS comply with—

(a) Civil standards in the Federal Aviation Regulations (14 CFR chapter I) applicable to the type of operations you are asking the contractor to conduct;

(b) Applicable military standards; or

(c) Your agency's Flight Program Standards (see §§ 102–33.140 through 102–33.185 for the requirements for Flight Program Standards).

Acquiring Aircraft Parts

§ 102–33.110 What are our responsibilities when acquiring aircraft parts?

When acquiring aircraft parts, you must do the following:

(a) Acquire the parts cost-effectively and acquire only what you need.

(b) Inspect and test (as appropriate) all incoming parts and ensure that they are documented as safe for flight before installing them.

(c) Obtain all logbooks and maintenance records (for guidance on maintaining records for non-military parts, see FAA Advisory Circular 43–9C, ''Maintenance Records,'' which is

available from the Federal Aviation Administration (FAA)) at *http://www.faa.gov*.

(d) Plan for adequate storage and protection.

(e) Report all Suspected Unapproved Parts (SUP) to the FAA, SUP Program Office, AVR–20, 45005 Aviation Drive, Suite 214, Dulles, VA 20166–7541, by telephone at 703–661–0580, or by calling the FAA Aviation Safety Hotline at 800–255–1111.

§ 102–33.115 Are there special requirements for acquiring military Flight Safety Critical Aircraft Parts (FSCAP)?

Yes, when you acquire military Flight Safety Critical Aircraft Parts (FSCAP), you must—

(a) Accept a FSCAP only when it is documented or traceable to its original equipment manufacturer (a FSCAP's DOD FSCAP Criticality Code should be marked or tagged on the part or appear on its invoice/transfer document; see § 102–33.375 for further explanation of the FSCAP Criticality Codes); and

(b) Not install undocumented, but traceable FSCAP until you have the parts inspected and recertified by the original equipment manufacturer or FAA-approved production approval holder (see § 102–33.370 on FSCAP).

§ 102–33.120 Are there special requirements for acquiring life-limited parts?

Yes, when you acquire new or used life-limited parts, you must—

(a) Identify and inspect the parts, ensuring that they have civil or military-certified documentation (*i.e.*, complete life histories); and

(b) Mutilate and dispose of any expired life-limited parts (see § 102–33.370 on handling life-limited parts).

Subpart C—Managing Government Aircraft and Aircraft Parts

Overview

§ 102–33.125 If we use Federal aircraft, what are our management responsibilities?

If you use Federal aircraft, you are responsible for—

(a) Establishing agency-specific Flight Program Standards, as defined in §§ 102–33.140 through 102–33.185;

(b) Accounting for the cost of acquiring, operating, and supporting your aircraft;

(c) Accounting for use of your aircraft;

(d) Maintaining and accounting for aircraft parts;

(e) Reporting inventory, cost, and utilization data (for reporting requirements, see subpart E of this part); and

(f) Properly disposing of aircraft and parts following this part and FMR subchapter B (41 CFR chapter 102, subchapter B).

§ 102–33.130 If we hire CAS, what are our management responsibilities?

If you hire CAS, you are responsible for—

(a) Establishing agency-specific Flight Program Standards, as defined in §§ 102–33.140 through 102–33.185, as applicable, and requiring compliance with these standards in your contracts and agreements;

(b) Accounting for the cost of your aircraft and services hired as CAS;

(c) Accounting for use of your aircraft hired as CAS; and

(d) Reporting the cost and usage data for your CAS hires (for reporting requirements, see subpart E of this part).

§ 102–33.135 Do we have to follow the direction in OMB Circular A–123, ''Management Accountability and Control,'' June 21, 1995, for establishing management controls for our aviation program?

Yes, you must follow the direction in OMB Circular A–123, ''Management Accountability and Control,'' June 21, 1995, for establishing management controls for your aviation program. (See Note to § 102–33.70.) The circular requires that you establish organizations, policies, and procedures to ensure that, among other things, your aviation program achieves its intended results and you use your resources consistently with your agency's missions.

Establishing Flight Program Standards

§ 102–33.140 What are Flight Program Standards?

Flight Program Standards are standards specific to your agency's aviation operations, including your commercial aviation services (CAS) contracts. Your Flight Program Standards must meet the requirements in §§ 102–33.155 through 102–33.185, and they must meet or exceed applicable civil or military rules. When civil or military rules do not apply, you must use risk management techniques to develop Flight Program Standards specifically for your program. In your standards, you must address all aspects of your program, *e.g.*, uncertificated aircraft, high-risk operations, special personnel requirements, that may not be addressed under the rules for civil aircraft in the Federal Aviation Regulations (14 CFR chapter I). The requirements for Flight Program Standards in §§ 102–33.155 through 102–33.185 incorporate and adapt the ICAP's ''Safety Standards Guidelines for Federal Flight Programs,'' revised December 22, 1999, and available from GSA, Aircraft Management Policy Division (MTA), 1800 F Street, NW., Washington, DC 20405.

§ 102–33.145 Why must we establish Flight Program Standards?

You must establish Flight Program Standards to ensure that aircraft your agency uses are operated safely, effectively, and efficiently.

§ 102–33.150 Is any agency exempt from establishing Flight Program Standards under this part?

Yes, in addition to the Armed Forces and intelligence agencies, entities outside the executive branch of the Federal Government are exempt from establishing Flight Program Standards when using aircraft loaned to them by an executive agency (that is, owned by an executive agency, but operated by and on behalf of the loanee) unless the loanee—

(a) Uses the aircraft to conduct official Government business; or

(b) Is required to follow §§ 102–33.140 through 102–33.185 under a Memorandum of Agreement governing the loan.

§ 102–33.155 How must we establish Flight Program Standards?

To establish Flight Program Standards, you must write, publish (as appropriate), implement, and comply with detailed, agency-specific standards, which establish or require (contractually, where applicable) policies and procedures for—

(a) Management/administration of your flight program (in this part, ''flight program'' includes CAS contracts);

(b) Operation of your flight program;

(c) Maintenance of your Government aircraft;

(d) Training for your flight program personnel; and

(e) Safety of your flight program.

Management/Administration

§ 102–33.160 What standards must we establish or require (contractually, where applicable) for management/administration of our flight program?

For management/administration of your flight program, you must establish or require (contractually, where applicable) the following:

(a) A management structure responsible for the administration, operation, safety, training, maintenance, and financial needs of your aviation operation (including establishing minimum requirements for these items for any commercial contracts).

(b) Guidance describing the roles, responsibilities, and authorities of your flight program personnel, *e.g.*, managers, pilots and other crewmembers, flight

safety personnel, maintenance personnel, and dispatchers.

(c) Procedures to record and track flight time, duty time, and training of crewmembers.

(d) Procedures to record and track duty time and training of maintenance personnel.

Operations

§ 102–33.165 What standards must we establish or require (contractually, where applicable) for operation of our flight program?

For operation of your flight program, you must establish or require (contractually, where applicable) the following:

(a) Basic qualifications and currency requirements for your pilots and other crewmembers, maintenance personnel, and other mission-related personnel.

(b) Limitations on duty time and flight time for pilots and other crewmembers.

(c) Compliance with owning-agency or military safety of flight notices and operational bulletins.

(d) Flight-following procedures to notify management and initiate search and rescue operations for lost or downed aircraft.

(e) Dissemination, as your agency determines appropriate, of a disclosure statement to all crewmembers and qualified non-crewmembers who fly aboard your agency's Government aircraft, as follows:

Disclosure Statement for Crewmembers and Qualified Non-Crewmembers Flying on Board Government Aircraft Operated as Public Aircraft

Generally, an aircraft used exclusively for the U.S. Government may be considered a ''public aircraft'' as defined in Public Law 106–181, provided it is not a Government-owned aircraft transporting passengers or operating for commercial purposes. A public aircraft is not subject to many Federal Aviation Regulations, including requirements relating to aircraft certification, maintenance, and pilot certification. If an agency transports passengers on a Government-owned aircraft or uses that aircraft for commercial purposes, the agency must comply with all Federal Aviation Regulations applicable to civil aircraft. If you have any questions concerning whether a particular flight will be a public aircraft operation or a civil aircraft operation, you should contact the agency sponsor of that flight.

You have certain rights and benefits in the unlikely event you are injured or killed while working aboard a Government-owned or operated aircraft. Federal employees and some private citizens are eligible for workers' compensation benefits under the Federal Employees' Compensation Act (FECA). When FECA applies, it is the sole remedy. For more information about FECA and its coverage, consult with your agency's benefits office or contact the Branch of Technical Assistance at the Department of Labor's Office of Workers' Compensation Programs at (202) 693–0044.

State or foreign laws may provide for product liability or ''third party'' causes of actions for personal injury or wrongful death. If you have questions about a particular case or believe you have a claim, you should consult with an attorney.

Some insurance policies may exclude coverage for injuries or death sustained while working or traveling aboard a Government or military aircraft or while within a combat area. You may wish to check your policy or consult with your insurance provider before your flight. The insurance available to Federal employees through the Federal Employees Group Life Insurance Program does not contain an exclusion of this type.

If you are the victim of an air disaster resulting from criminal activity, Victim and Witness Specialists from the Federal Bureau of Investigation (FBI) and/or the local U.S. Attorney's Office will keep you or your family informed about the status of the criminal investigation(s) and provide you or your family with information about rights and services, such as crisis intervention, counseling and emotional support. State crime victim compensation may be able to cover crime-related expenses, such as medical costs, mental health counseling, funeral and burial costs, and lost wages or loss of support. The Office for Victims of Crime (an agency of the Department of Justice) and the U.S. Attorneys Office are authorized by the Antiterrorism Act of 1996 to provide emergency financial assistance to State programs for the benefit of victims of terrorist acts or mass violence.

If you are a Federal employee. If you are injured or killed on the job during the performance of duty, including while traveling or working aboard a Government aircraft or other Government-owned or operated conveyance for official Government business purposes, you and your family are eligible to collect workers' compensation benefits under FECA. You and your family may not file a personal injury or wrongful death suit against the United States or its employees. However, you may have cause of action against potentially liable third parties.

You or your qualifying family member must normally also choose between FECA disability or death benefits, and those payable under your retirement system (either the Civil Service Retirement System or the Federal Employees Retirement System). You may choose the benefit that is more favorable to you.

If you are a private citizen not employed by the Federal government. Even if the Federal government does not regularly employ you, if you are rendering personal service to the Federal government on a voluntary basis or for nominal pay, you may be defined as a Federal employee for purposes of FECA. If that is the case, you and your family are eligible to receive workers' compensation benefits under FECA, but may not collect in a personal injury or wrongful death lawsuit against the United States or its employees. You and your family may file suit against potentially liable third parties. Before you board a Government aircraft, you may wish to consult with the department or agency sponsoring the flight to clarify whether you are considered a Federal employee.

If the agency determines that you are not a ''Federal employee,'' you and your family will not be eligible to receive workers' compensation benefits under FECA. If you are onboard the aircraft for purposes of official Government business, you may be eligible for workman's compensation benefits under state law. If an accident occurs within the United States, or its territories, its airspace, or over the high seas, you and your family may claim against the United States under the Federal Tort Claims Act or Suits in Admiralty Act. If you are killed aboard a military aircraft, your family may be eligible to receive compensation under the Military Claims Act, or if you are an inhabitant of a foreign country, under the Foreign Claims Act.

Note: This disclosure statement is not all-inclusive. You should contact your agency's personnel office, or if you are a private citizen, your agency sponsor or point-of-contact for further assistance.

(f) At the origin of each flight, creation of a manifest containing the full names of all persons on board for each leg of flight, a point of contact for each person, and phone numbers for the points of contact.

(g) Documentation of any changes in the manifest by leg, and retention of manifests for two years from the time of flight.

(h) Procedures for reconciling flight manifests with persons actually on board and a method to test those procedures periodically.

(i) At the origin of each flight, preparation of a complete weight and balance computation and a cargo-loading manifest, and retention of this computation and manifest for 30 days from the time of flight.

(j) Appropriate emergency procedures and equipment for specific missions.

(k) Procedures to ensure that required Aviation Life Support Equipment (ALSE) is inspected and serviceable.

Maintenance

§ 102–33.170 What standards must we establish or require (contractually, where applicable) for maintenance of our Government aircraft?

For maintenance of your Government aircraft, you must establish or require (contractually, where applicable) the following:

(a) Aircraft maintenance and inspection programs that comply with whichever is most applicable among—

(1) Programs for ex-military aircraft;

(2) Manufacturers' programs;

(3) FAA-approved programs (*i.e.*, following the Federal Aviation Regulations);

(4) FAA-accepted programs (*i.e.*, those following ICAP guides that have been accepted by the FAA); or

(5) Your agency's self-prescribed programs.

(b) Compliance with owning-agency or military safety of flight notices, FAA airworthiness directives, or mandatory manufacturers' bulletins applicable to the types of aircraft, engines, propellers, and appliances you operate.

(c) Procedures for operating aircraft with inoperable equipment.

(d) Technical support, including appropriate engineering documentation and testing, for aircraft, powerplant, propeller, or appliance repairs, modifications, or equipment installations.

(e) A quality control system for acquiring replacement parts, ensuring that the parts you acquire have the documentation needed to determine that they are safe for flight and are inspected and tested, as applicable.

(f) Procedures for recording and tracking maintenance actions; inspections; and the flight hours, cycles, and calendar times of life-limited parts and FSCAP.

Training

§ 102–33.175 What standards must we establish or require (contractually, where applicable) to train our flight program personnel?

You must establish or require (contractually, where applicable) an instructional program to train your flight program personnel, initially and on a recurrent basis, in their responsibilities and in the operational skills relevant to the types of operations that you conduct. See § 102–33.180(a) for specific requirements for safety manager training.

Safety

§ 102–33.180 What standards must we establish or require (contractually, where applicable) for flight program safety?

For flight program safety, you must establish or require (contractually, where applicable) the following:

(a) The appointment of qualified aviation safety managers (*i.e.*, those individuals who are responsible for an agency's aviation safety program, regardless of title), who must be—

(1) Experienced as pilots or crewmembers or in aviation operations management/flight program management; and

(2) Graduated from an aviation safety officer course provided by a recognized training provider and authority in aviation safety before appointment or within one year after appointment.

(b) Risk analysis and risk management to identify and mitigate hazards and provide procedures for managing risk to an optimum level.

(c) Use of independent oversight and assessments (*i.e.*, unbiased inspections) to verify compliance with the standards called for in this part.

(d) Procedures for reporting unsafe operations to senior aviation safety managers.

(e) A system to collect and report information on aircraft accidents and incidents (as required by 49 CFR part 830 and §§ 102–33.445 and 102–33.450).

(f) A program for preventing accidents, which includes—

(1) Measurable accident prevention procedures (*e.g.*, pilot proficiency evaluations, fire drills, hazard analyses);

(2) A system for disseminating accident-prevention information;

(3) Safety training;

(4) An aviation safety awards program; and

(5) For Federal aircraft-owning agencies, a safety council.

§ 102–33.185 What standards must we establish or require (contractually, where applicable) for responding to aircraft accidents and incidents?

For responding to aircraft accidents and incidents, you must establish or require (contractually, where applicable) the following:

(a) An aircraft accident/incident reporting capability to ensure that you will comply with the NTSB's regulations (in 49 CFR parts 830 and 831), including notifying NTSB immediately when you have an aircraft accident or an incident as defined in 49 CFR 830.5.

(b) An accident/incident response plan, modeled on the NTSB's ''Federal Plan for Aviation Accidents Involving Aircraft Operated by or Chartered by Federal Agencies,'' and periodic disaster response exercises to test your plan. You can see a copy of the NTSB's plan on the Web at *http://www.ntsb.gov/publictn/1999/SPC9904.pdf* or htm.

(c) Procedures (see 49 CFR 831.11) for participating as a party in NTSB's investigations of accidents or incidents involving aircraft that your agency owns or hires and for conducting parallel investigations, as appropriate.

(d) Training in investigating accidents/incidents for your agency's personnel who may be asked to participate in NTSB investigations.

(e) Procedures for disseminating, in the event of an aviation disaster that involves one of your Government aircraft, information about eligibility for benefits that is contained in the disclosure statement in § 102–33.165(e) to anyone injured, to injured or deceased persons' points of contact (listed on the manifest), and to the families of injured or deceased crewmembers and qualified non-crewmembers.

Note to § 102–33.185: This part does not supersede any of the regulations in 49 CFR part 830 or part 831. For definitions of terms and complete regulatory guidance on notifying NTSB and reporting aircraft accidents and incidents, see 49 CFR parts 830 and 831.

Accounting for the Cost of Government Aircraft

§ 102–33.190 What are the aircraft operations and ownership costs for which we must account?

You must account for the operations and ownership costs of your Government aircraft as described in the ''Government Aircraft Cost Accounting Guide'' (CAG), which follows OMB Circular A–126 and is available from GSA, Aircraft Management Policy Division (MTA), 1800 F Street, NW., Washington, DC 20405.

§ 102–33.195 Do we need an automated system to account for aircraft costs?

If you own Federal aircraft or operate bailed Federal aircraft, you must maintain an automated system to account for aircraft costs by collecting the cost data elements required by the Federal Aviation Interactive Reporting System (FAIRS). The functional specifications and data definitions for a FAIRS-compliant system are described in the ''Common Aviation Management Information Standard'' (C–AMIS), which is available from GSA, Aircraft Management Policy Division (MTA), 1800 F Street, NW., Washington, DC 20405. See §§ 102–33.395 and 102–33.460 for more information on FAIRS and C–AMIS. Agencies who use only CAS aircraft and do not have Federal aircraft must keep records adequate for reporting information through FAIRS, but are not required to have an automated system (see §§ 102–33.435 and 102–33.440 for the information on CAS that you must report through FAIRS).

§ 102–33.200 Must we periodically justify owning and operating Federal aircraft?

Yes, after you have held a Federal aircraft for five years, you must justify owning and operating the aircraft by reviewing your operations and establishing that you have a continuing need for the aircraft, as required in OMB Circular A–76. You must also establish the cost-effectiveness of all your aircraft operations following OMB-approved cost justification methodologies, which

are described in OMB Circular A–76 every five years.

§ 102–33.205 When we use our aircraft to support other executive agencies, must we recover the operating costs?

(a) Under 31 U.S.C. 1535 and other statutes, you may be required to recover the costs of operating aircraft in support of other agencies. Depending on the statutory authorities under which you acquired and operate your aircraft, you will use either of two methods for establishing the rates charged for using your aircraft:

(1) The variable cost recovery rate; or

(2) The full cost recovery rate.

(b) See the Government Aircraft CAG, which is available from GSA, Aircraft Management Policy Division (MTA), 1800 F Street, NW., Washington, DC 20405, for definitions of these terms.

Accounting for the Use of Government Aircraft

§ 102–33.210 How do we account for the use of our Government aircraft?

To account for the use of Government aircraft, you must document all flights and keep this documentation for two years after the date of the flight. For each flight, record the—

(a) Aircraft's registration mark;

(b) Owner and operator (*e.g.*, the owner may not be the operator, as is the case when a CAS aircraft, owned commercially, is operated by U.S. Government personnel);

(c) Purpose of the flight (*i.e.*, the Governmental function that the aircraft was dispatched to perform);

(d) Departure and destination points;

(e) Flight date(s) and times;

(f) A manifest (see §§ 102–33.165(g) and (h)); and

(g) Name(s) of the pilot(s) and crewmembers.

§ 102–33.215 May we use Government aircraft to carry passengers?

Yes, you may use Government aircraft to carry passengers with the following restrictions:

(a) You may carry passengers only on aircraft that you operate or require contractually to be operated according to the rules and requirements in Federal Aviation Regulations (14 CFR chapter I).

(b) For certain kinds of travel, your agency must justify passengers' presence on Government aircraft (see OMB Circular A–126 and the Government Aircraft Cost Accounting Guide (CAG) published by GSA for complete information on authorizing travel and analyzing costs before authorizing travel on Government aircraft).

§ 102–33.220 What are the responsibilities of an agency's aviation program in justifying the use of a Government aircraft to transport passengers?

(a) Upon request from an agency's travel approving authority, the agency's aviation program must provide cost estimates to assist in determining whether or not use of a Government aircraft to carry passengers is justified. See OMB Circular A–126 for more information on justifying travel on Government aircraft. See also the Government Aircraft Cost Accounting Guide (CAG) published by GSA (defined in § 102–33.20) for guidance on estimating the cost of using a Government aircraft. The cost of using a Government aircraft is—

(1) The variable cost of using a Federal aircraft;

(2) The amount your agency will be charged by a CAS provider; or

(3) The variable cost of using an aircraft owned by another agency as reported by the owning agency if you are not charged for the use of the aircraft.

(b) In weighing alternatives for travel on Government aircraft, you must also consider the following:

(1) If no follow-on trip is scheduled, all time required positioning the aircraft to begin the trip and to return the aircraft to its normal base of operations.

(2) If a follow-on trip requires repositioning, the cost for the repositioning should be charged to the associated follow-on trip.

(3) If an aircraft supports a multi-leg trip (a series of flights scheduled sequentially), the use of the aircraft for the total trip may be justified by comparing the total variable cost of the entire trip to the commercial aircraft cost (including charter) for all legs of the trip.

(4) The use of foreign aircraft as CAS is authorized when the agency has determined that an equivalent level of safety exists as compared to U.S. operations of a like kind. The safety of passengers shall be the overriding consideration for the selection of travel mode when comparing foreign sources of scheduled commercial airlines and CAS.

Managing Aircraft Parts

§ 102–33.225 How must we manage aircraft parts?

You must manage your aircraft parts by maintaining proper storage, protection, maintenance procedures, and records for the parts throughout their life cycles.

§ 102–33.230 May we use military FSCAP on non-military FAA-type certificated Government aircraft?

You may use dual-use military FSCAP on non-military aircraft operated under restricted or standard airworthiness certificates if the parts are inspected and approved for such installation by the FAA. See detailed guidance in FAA Advisory Circular 20–142, ''Eligibility and Evaluation of U.S. Military Surplus Flight Safety Critical Aircraft Parts, Engines, and Propellers.''

§ 102–33.235 What documentation must we maintain for life-limited parts and FSCAP?

For life-limited parts and FSCAP, you must hold and update the documentation that accompanies these parts for as long as you use or store them. When you dispose of life-limited parts or FSCAP, the up-to-date documentation must accompany the parts. (See § 102–33.370.)

Subpart D–Disposing of Government Aircraft and Aircraft Parts

Overview

§ 102–33.240 What must we consider before disposing of aircraft and aircraft parts?

Before disposing of aircraft and aircraft parts, you must first determine if the aircraft or parts are excess to your agency's mission requirements or if you will need replacements (*i.e.*, your aircraft or parts are not excess), as follows:

(a) If your aircraft/parts are ...	And ...	Then ...
No longer needed to perform, or cannot perform, any Governmental function for your agency, *i.e.*, they are excess to your needs,	You will not replace them, ...	You must report them to GSA as excess property (see part 102–36 of this subchapter B).

(b) If your aircraft/parts are ...	But ...	Then ...
No longer suitable for performing their mission(s) for your agency,	You need to replace them to continue performing your mission(s).	You are prohibited from exchanging or selling your aircraft unless you ask for and receive approval from GSA to deviate from part 102–39 of this subchapter B. However, exchange/sale of aircraft parts is permitted.

§ 102–33.245 May we report as excess, or replace (*i.e.,* by exchange/sale), both operational and non-operational aircraft?

Yes, you may report as excess both operational and non-operational aircraft by following the rules governing excess property in part 102–36 of this subchapter B. Exchange or sale of aircraft is prohibited by part 102–39 of this subchapter B, so you will need approval from GSA to deviate from that part to replace operational or non-operational aircraft by exchange/sale. (See § 102–33.275 for further guidance on this restriction).

§ 102–33.250 May we report as excess, or replace, declassified aircraft?

Yes, you may report as excess, or replace, a declassified aircraft (see §§ 102–33.415 through 102–33.420 for information on declassifying aircraft). However, a declassified aircraft is no longer considered an aircraft, but may be considered as a group of aircraft parts or other property for ground use only. You must carry such ''aircraft parts or other property'' on your property records under the appropriate Federal Supply Classification group(s) (*e.g.*, miscellaneous property, but not as an ''aircraft''). For disposal of the property remaining after declassification of an aircraft, you must follow the property disposal regulations in parts 102–36, 102–37, and 102–39 of this subchapter B.

§ 102–33.255 Must we document FSCAP or life-limited parts installed on aircraft that we will report as excess or replace?

Yes, you must comply with the documentation procedures described in § 102–33.370 if your aircraft and/or engines contain FSCAP or life-limited parts.

§ 102–33.260 When we report as excess, or replace, an aircraft (including a declassified aircraft), must we report the change in inventory to the Federal Aviation Interactive Reporting System (FAIRS)?

(a) Yes, when you report as excess, or replace, an aircraft, you must report the change in inventory to the Federal Aviation Interactive Reporting System (FAIRS). For complete information, see the ''FAIRS User's Manual,'' which is available from GSA, Aircraft Management Policy Division (MTA), 1800 F Street, NW., Washington, DC 20405.

(b) Within 14 calendar days of the date you dispose of the aircraft, you must report—

(1) The disposal method (*e.g.*, reassignment, inter-agency transfer, donation, sale as surplus or scrap, declassification, or exchange/sale);

(2) The disposal date; and

(3) The identity and type of recipient (*e.g.*, State, educational institution, executive agency, commercial vendor).

Reporting Excess Government Aircraft

§ 102–33.265 What are our options if aircraft are excess to our needs?

If aircraft are excess to your needs, your options include first determining if any of your sub-agencies can use the aircraft. If so, you may reassign the aircraft within your agency. If not, you must report the aircraft as excess property to GSA (see parts 102–36 and 102–37 of this subchapter B). GSA will dispose of the property, giving priority first to transferring it to another Federal agency, next to donating it as surplus property, and finally to selling it to the public as surplus.

§ 102–33.270 What is the process for reporting an excess aircraft?

To report an excess aircraft, you must submit a Standard Form (SF) 120, Report of Excess Personal Property (see § 102–2.135 of this chapter), to GSA (Federal Supply Service (FSS) Region 9, 450 Golden Gate Ave., 9FBP, San Francisco, CA 94102–3434, (415) 522–3029). You may also report electronically to GSA's Federal Disposal System (FEDS). For information on reporting excess property electronically, contact the FSS Office of Transportation and Personal Property (FBP), 1941 Jefferson Davis Highway, Room 812, Arlington, VA 22202, (703) 305–7240.

Replacing Aircraft Through Exchange or Sale

§ 102–33.275 Are there restrictions on replacing aircraft by exchange or sale?

Yes, because aircraft are on GSA's exchange/sale prohibited list (see part 102–39 of this subchapter B), you may not exchange or sell aircraft unless you obtain approval from GSA to deviate from part 102–39 of this subchapter B (see § 102–33.10 on how to request a deviation). In your letter of request to GSA, you must include the full details of your situation and the proposed transaction and certify that—

(a) Your agency's mission is dependent upon receiving a replacement aircraft;

(b) You will be replacing the aircraft with similar-type property (see § 102–39.15 of this subchapter B for a definition of ''similar'');

(c) Your replacement will be on a one-for-one basis (you must request and justify a waiver from GSA, Aircraft Management Policy Division (MTA), 1800 F Street, NW., Washington, DC 20405, to deviate from the one-for-one rule); and

(d) The exchange or sale meets all other requirements in part 102–39 of this subchapter B.

Note to § 102–33.275: The requirement to get GSA's approval for an exchange/sale does not apply if a Federal statute specifically authorizes your agency to exchange or sell certain aircraft.

§ 102–33.280 What are our options if we need a replacement aircraft?

If you need to replace an aircraft, and you have GSA's prior written approval for a deviation (see § 102–33.275), your options include—

(a) Negotiating and conducting an exchange transaction directly with an aircraft provider and obtaining credit toward the purchase of a replacement aircraft, following the procurement rules applicable to your agency; or

(b) Selling the aircraft and using the proceeds to offset the cost of purchasing a replacement aircraft, following part 102–39 of this subchapter B. The GSA can conduct sales for you; contact GSA (Region 9) for more information.

§ 102–33.285 Do we need to include any special disclaimers in our exchange/sale agreements for uncertificated aircraft or aircraft that we have operated as public aircraft (*i.e.*, not in compliance with the Federal Aviation Regulations, 14 CFR chapter I)?

Yes, when you exchange or sell uncertificated aircraft or aircraft maintained as public aircraft, you must ensure that the exchange or sales offerings contain the following statement:

Warning to purchasers/recipients. The aircraft you have purchased or received in an

exchange may not be in compliance with applicable FAA requirements. You are solely responsible for bringing the aircraft into compliance with 14 CFR chapter I, or other applicable standards, by obtaining all necessary FAA inspections or modifications.

§ 102–33.290 What other disclaimers must we include in our exchange/sale agreements for aircraft?

When you exchange or sell aircraft, you must ensure that the following disclaimer is signed by the purchaser/recipient and received by the Government before releasing the aircraft to the purchaser/recipient:

The purchaser/recipient agrees that the Government shall not be liable for personal injuries to, disabilities of, or death of the purchaser/recipient, the purchaser's/recipient's employees, or to any other persons arising from or incident to the purchase of this aircraft, its use, or disposition. The purchaser/recipient shall hold the Government harmless from any or all debts, liabilities, judgments, costs, demands, suits, actions, or claims of any nature arising from or incident to purchase, use, or resale of this item.

§ 102–33.295 May we exchange or sell an aircraft through reimbursable transfer to another executive agency?

Yes, you may exchange or sell aircraft through reimbursable transfer to another executive agency if you have prior written approval from GSA to deviate from part 102–39 of this subchapter B (see § 102–33.275). See part 102–39, subpart B, and part 102–36 of this subchapter B for more information on reimbursable transfer of property. Before offering to the public an aircraft that is eligible for exchange/sale, you should consult with other executive agencies to find out if any agency is interested in taking the aircraft for reimbursement in funds or in kind (as you are directed in part 102–39 of this subchapter B).

Note to § 102–33.295: Some agencies may also have special congressional authorization to recover costs.

Disposing of Aircraft Parts

§ 102–33.300 What must we consider before disposing of aircraft parts?

Before disposing of aircraft parts, you must determine if they are excess to your agency's mission requirements or if you will need replacements (*i.e.*, they are not excess). The table in § 102–33.240 shows the differences between excess and replacement parts.

§ 102–33.305 May we report as excess, or replace, FSCAP and life-limited parts?

Yes, you may report as excess, or replace, FSCAP and life-limited parts, but they require special handling. See the tables in § 102–33.370.

§ 102–33.310 May we report as excess, or replace, unsalvageable aircraft parts?

No, you may not report unsalvageable aircraft parts as excess or exchange or sell them for replacements. You must mutilate unsalvageable parts. You may sell the mutilated parts only as scrap or report that scrap to GSA for sale.

§ 102–33.315 What are the procedures for mutilating unsalvageable aircraft parts?

To mutilate unsalvageable aircraft parts, you must—

(a) Destroy the data plates, remove the serial/lot/part numbers, and cut, crush, grind, melt, burn, or use other means to prevent the parts from being misidentified or used as serviceable aircraft parts. See detailed guidance in the FAA's Advisory Circular 21-38, ''Disposition of Unsalvageable Aircraft Parts and Materials,'' available from the FAA. Call your regional FAA Flight Standards District Office for additional guidance;

(b) Ensure that an authorized official of your agency witnesses and documents the mutilation; and

(c) Retain a signed certification and statement of mutilation.

§ 102–33.320 What must we do if we are unable to perform required mutilation of aircraft parts?

If you are unable to perform the required mutilation of aircraft parts, you must turn in the parts to a Federal or federally approved facility for mutilation and proper disposition. Ensure that any contractor follows the provisions of § 102–33.315 for mutilating and disposing of the parts.

§ 102–33.325 What documentation must we furnish with excess/surplus or replaced parts when they are transferred, donated, exchanged, or sold?

When you transfer, donate, exchange, or sell excess/surplus or replaced parts, you must—

(a) Furnish all applicable labels, tags, and historical and modification records for serviceable aircraft parts;

(b) Mark mutilated parts as unsalvageable (mutilated parts may be sold only for scrap; see § 102–33.315); and

(c) Ensure that all available tags, labels, applicable historical data, life-histories, and maintenance records accompany FSCAP and life-limited parts and that FSCAP criticality codes (see § 102–33.375) are perpetuated on documentation (see § 102–33.330 for additional requirements).

Reporting Excess Aircraft Parts

§ 102–33.330 What must we do with aircraft parts that are excess to our needs?

If you have aircraft parts that are excess to your needs, you must first determine if any of your sub-agencies can use the parts. If they can, you may reassign them within your agency. If they cannot, then you must report the excess parts to the GSA FSS Office in your region, using SF 120, Report of Excess Personal Property (see § 102–2.135 of subchapter A of this chapter). When reporting excess FSCAP, you must include the manufacturer's name, date of manufacture, part number, serial number, and the appropriate Criticality Code on the SF 120. You may report electronically using the FEDS system. For information on reporting excess property electronically, contact the FSS Office of Transportation and Personal Property (FBP), 1941 Jefferson Davis Highway, Room 812, Arlington, VA 22202, (703) 305–7240. See parts 102–36 and 102–37 of this subchapter B on disposing of excess property.

§ 102–33.335 What are the receiving agency's responsibilities in the transfer or donation of aircraft parts?

An agency that receives transferred or donated aircraft parts must:

(a) Verify that all applicable labels and tags and historical and modification records are furnished with serviceable aircraft parts (*i.e.*, parts that are intended for flight use). This requirement does not apply to parts for ground use only. See the tables at § 102–33.370.

(b) Mutilate all transferred or donated parts that you discover to be unsalvageable, and dispose of them properly, following the procedures in § 102–33.315.

§ 102–33.340 What are GSA's responsibilities in disposing of excess and surplus aircraft parts?

In disposing of excess aircraft parts, the GSA Federal Supply Service office in your region reviews your SF 120, Report of Excess Personal Property (see § 102–2.135 of subchapter A of this chapter) for completeness and accuracy (of status, condition, and FSCAP and demilitarization codes if applicable) and ensures that the following certification is included on disposal documents (*e.g.*, transfer orders or purchasers' receipts):

Because of the critical nature of aircraft parts' failure and the resulting potential safety threat, recipients of aircraft parts must ensure that any parts installed on an aircraft meet applicable Federal Aviation Regulations and must obtain required certifications. GSA makes no representation as to a part's

conformance with the Federal Aviation Administration's requirements.

§ 102–33.345 What are a State agency's responsibilities in the donation of Federal Government aircraft parts?

When a State agency accepts surplus Federal Government aircraft parts for donation, the agency must—

(a) Review donation and transfer documents for completeness and accuracy, and ensure that the certification in § 102–33.340 is included;

(b) Ensure that when the donee determines the part to be unsalvageable, the donee mutilates the part following the procedures in § 102–33.315; and

(c) Ensure that the donee retains, maintains, and perpetuates all documentation for serviceable parts (*i.e.*, parts intended for flight use).

Replacing Aircraft Parts Through Exchange or Sale

§ 102–33.350 Do we need approval from GSA to replace aircraft parts by exchange or sale?

No, you don't need approval from GSA to replace parts by exchange or sale. However, you must follow the provisions of this subpart and part 102–39 of this subchapter B. Replacement parts do not have to be for the same type or design of aircraft, but you must use the exchange allowance or sales proceeds to purchase aircraft parts to support your aviation program to meet the ''similarity'' requirement in part 102–39 of this subchapter B.

§ 102–33.355 May we do a reimbursable transfer of parts with another executive agency?

Yes, you may request that the Federal Supply Service office in your region approve a reimbursable transfer of aircraft parts under the exchange/sale authority in part 102–39 of this subchapter B to another executive agency as a way to receive parts in exchange or money to be used to purchase replacement parts.

§ 102–33.360 What is the process for selling or exchanging aircraft parts for replacement?

(a) You or your agent (*e.g.*, another Federal agency or GSA, Federal Supply Service (FSS)) may transact an exchange or sale directly with a non-federal source or do a reimbursable transfer with another executive agency as long as you or your agent—

(1) Follow the provisions in this part and in part 102–39 of this subchapter B.

(2) Ensure that the applicable labels and tags, historical data and modification records accompany the parts at the time of sale, and that sales offerings on aircraft parts contain the following statement:

Warning to purchasers/recipients. The parts you have purchased or received in an exchange may not be in compliance with applicable FAA requirements. You are solely responsible for bringing the parts into compliance with 14 CFR part 21 or other applicable standards, by obtaining all necessary FAA inspections or modifications.

(3) Ensure that the following certification is signed by the purchaser/recipient and received by the Government before releasing parts to the purchaser/recipient:

The purchaser/recipient agrees that the Government shall not be liable for personal injuries to, disabilities of, or death of the purchaser/recipient, the purchaser's/recipient's employees, or to any other persons arising from or incident to the purchase of this item, its use, or disposition. The purchaser/recipient shall hold the Government harmless from any or all debts, liabilities, judgments, costs, demands, suits, actions, or claims of any nature arising from or incident to purchase, use, or resale of this item.

(b) GSA, Federal Supply Service (FSS), can conduct sales of aircraft parts for you. Contact your GSA Regional Office for more information.

§ 102–33.365 Must we report exchange or sale of parts to FAIRS?

No, you don't have to report exchange or sale of parts to FAIRS. However, you must keep records of the transactions, which GSA may request to see.

Special Requirements for Disposing of Flight Safety Critical Aircraft Parts (FSCAP) and Life-Limited Parts

§ 102–33.370 What must we do to dispose of military FSCAP or life-limited parts?

To dispose of military FSCAP or life-limited parts, you must use the following tables:

(a) Table 1 for disposing of uninstalled FSCAP and life-limited parts follows:

TABLE 1 FOR DISPOSING OF UNINSTALLED FSCAP AND LIFE-LIMITED PARTS

(1) If an Uninstalled FSCAP (*i.e.*, not installed in an aircraft or engine)—		
(i) Is documented	Then	(A) You may exchange or sell it or transfer it to another executive agency under parts 102–36 and 102–39 of this subchapter B and the rules in this part; (B) GSA may donate it for flight use under part 102–37 of this subchapter B; or (C) GSA may donate it for ground use only, after you mutilate and mark it, ''FSCAP—NOT AIRWORTHY'' (the State Agency for Surplus Property must certify that the part has been mutilated and marked before donation).
(ii) Is undocumented, but traceable to its original equipment manufacturer (OEM) or production approval holder (PAH)—	Then	(A) You may exchange or sell it only to the OEM or PAH under part 102–39 of this subchapter B; (B) GSA may transfer or donate it for flight use, but only by making it a condition of the transfer or donation agreement that the recipient will have the part inspected, repaired, and certified by the OEM or PAH before putting it into service (Note: Mark parts individually to ensure that the recipient is aware of the parts' service status); or (C) GSA may donate it for ground use only, after you mutilate and mark it, ''FSCAP—NOT AIRWORTHY'' (the State Agency for Surplus Property must certify that the part has been mutilated and marked before donation).

TABLE 1 FOR DISPOSING OF UNINSTALLED FSCAP AND LIFE-LIMITED PARTS—Continued

(iii) Is undocumented and untraceable, you must mutilate it, and—	Then	(A) GSA may transfer or donate it for ground use only, after you mark it, ''FSCAP—NOT AIRWORTHY'' (the State Agency for Surplus Property must certify that the part has been mutilated and marked before donation); or (B) You may sell it only for scrap under §§ 102–33.310 and 102–33.315.
(2) If an uninstalled life-limited part (*i.e.*, not installed in an aircraft or engine)—		
(i) Is documented with service life remaining.	Then	(A) You may exchange or sell it or transfer it to another executive agency under parts 102–36 and 102–39 of this subchapter B and the rules in this part; (B) GSA may donate it for flight use under part 102–37 of this subchapter B; or (C) GSA may donate it for ground use only, after you mutilate and mark it, ''EXPIRED LIFE-LIMITED—NOT AIRWORTHY'' (the State Agency for Surplus Property must certify that the part has been mutilated and marked before donation).
(ii) Is documented with no service life remaining, or undocumented, GSA may not transfer it to another executive agency for flight use—	But	(A) GSA may transfer or donate it for ground use only, after you mutilate and mark it, ''EXPIRED LIFE-LIMITED—NOT AIRWORTHY'' (the State Agency for Surplus Property must certify that the part has been mutilated and marked before donation); or (B) You must mutilate it and may sell it only for scrap.

(b) Table 2 for disposing of installed life-limited parts follows:

TABLE 2 FOR DISPOSING OF INSTALLED LIFE-LIMITED PARTS

(1) If a life-limited part is installed in an aircraft or an engine, and it—		
(i) Is documented with service life remaining—	Then	(A) You may exchange or sell the aircraft or engine, or GSA may tranfer the aircraft or engine to another executive agency under parts 102–36 and 102–39 of this subchapter B and the rules in this part; (B) GSA may donate the aircraft or engine for flight use; or (C) GSA may donate the aircraft or engine for ground use only, after you remove the part, mutilate it and mark it, ''EXPIRED LIFE-LIMITED—NOT AIRWORTHY.'' (Note: An internal engine part may be left installed, if, as a condition of the donation agreement, the receiving donee agrees to remove and mutilate the part, and mark it (the State Agency for Surplus Property must certify that the part has been multilated and marked)).
(i) Is documented with service life remaining—	Then	(A) You may exchange or sell the aircraft or engine, or GSA may transfer the aircraft or engine to another executive agency under parts 102–36 and 102–39 of this subchapter B and the rules in this part; (B) GSA may donate the aircraft or engine for flight use; or (C) GSA may donate the aircraft or engine for ground use only, after you remove the part, mutilate it and mark it, ''EXPIRED LIFE-LIMITED—NOT AIRWORTHY.'' (Note: An internal engine part may be left installed, if, as a condition of the donation agreement, the receiving donee agrees to remove and mutilate the part, and mark it (the State Agency for Surplus Property must certify that the part has been mutilated and marked)).

TABLE 2 FOR DISPOSING OF INSTALLED LIFE-LIMITED PARTS—Continued

(ii) Is documented with no service life remaining, or undocumented—	Then	(A) You must remove and mutilate the part before you exchange or sell the aircraft or engine (see rules for disposing of uninstalled life-limited parts in Table 1 of paragraph (a) of this section). (Note: If an aircraft or engine is exchanged or sold to its OEM or PAH, you do not have to remove the expired life-limited part); (B) You must remove and mutilate it before GSA may transfer or donate the aircraft or engine for flight use (see the rules for disposing of uninstalled FSCAP in Table 1 in paragraph (a) of this section). (Note: An internal engine part may be left installed, if you identify the part individually to ensure that the receiving agency is aware of the part's service status and, as a condition of the transfer or donation agreement, the receiving agency agrees to remove and mutilate the part before the engine is put into service. You must certify mutilation for transfers, and the State Agency for Surplus Property must certify that the part has been mutilated for donations); or (C) GSA may donate the aircraft or engine for ground use only, after you remove the part, mutilate and mark it ''EXPIRED LIFE-LIMITED—NOT AIRWORTHY.'' (Note: An internal engine part may be left installed, if, as a condition of the donation agreement, the receiving agency agrees to remove and mutilate the part and mark it (the State Agency for Surplus Property must certify that the part has been mutilated and marked)).

§ 102–33.375 What is a FSCAP Criticality Code?

A FSCAP Criticality Code is a code assigned by DOD to indicate the type of FSCAP: Code ''F'' indicates a standard FSCAP; Code ''E'' indicates a nuclear-hardened FSCAP. You must perpetuate a FSCAP's Criticality Code on all property records and reports of excess. If the code is not annotated on the transfer document that you received when you acquired the part, you may contact the appropriate military service or query DOD's Federal Logistics Information System (FLIS—FedLog) using the National Stock Number (NSN) or the part number. For assistance in subscribing to the FLIS service, contact the FedLog Consumer Support Office, 800–351–4381.

Subpart E—Reporting Information on Government Aircraft

Overview

§ 102–33.380 Who must report information to GSA on Government aircraft?

You must report information to GSA on Government aircraft if your agency—

(a) Is an executive agency of the United States Government; and

(b) Owns, lease-purchases, bails, borrows, loans, leases, rents, charters, or contracts for (or obtains by inter-service support agreement) Government aircraft.

§ 102–33.385 Is any civilian executive agency exempt from the requirement to report information to GSA on Government aircraft?

No civilian executive agency is exempt, however, the Armed Forces (including the U.S. Coast Guard, the Reserves, and the National Guard) and U.S. intelligence agencies are exempt from the requirement to report to GSA on Government aircraft.

§ 102–33.390 What information must we report on Government aircraft?

(a) You must report the following information to GSA, Aircraft Management Policy Division (MTA), 1800 F Street, NW., Washington, DC 20405:

(1) Inventory data on Federal aircraft through FAIRS.

(2) Cost and utilization data on Federal aircraft through FAIRS.

(3) Cost and utilization data on CAS aircraft and related aviation services through FAIRS.

(4) Accident and incident data through the ICAP Aircraft Accident Incident Reporting System (AAIRS).

(5) The results of cost-comparison studies in compliance with OMB Circular A–76 to justify purchasing, leasing, modernizing, replacing, or otherwise acquiring aircraft and related aviation services.

(b) Information on senior Federal officials and others who travel on Government aircraft to GSA, Travel Management Policy Division (MTT), 1800 F Street, NW., Washington, DC 20405 (see OMB Circular A–126 for specific rules and a definition of senior Federal official).

Federal Aviation Interactive Reporting System (FAIRS)

§ 102–33.395 What is FAIRS?

FAIRS is a management information system operated by GSA (MTA) to collect, maintain, analyze, and report information on Federal aircraft inventories and cost and usage of Federal aircraft and CAS aircraft (and related aviation services). Users access FAIRS through a highly-secure Web site. The ''FAIRS User's Manual'' contains the business rules for using the system and is available from GSA, Aircraft Management Policy Division (MTA), 1800 F Street, NW., Washington, DC 20405.

§ 102–33.400 How must we report to FAIRS?

You must report to FAIRS electronically through a secure Web interface to the FAIRS application on the Internet. For information on becoming a FAIRS user, call GSA, Aircraft Management Policy Division, (MTA).

§ 102–33.405 When must we report to FAIRS?

You must report any changes in your Federal aircraft inventory within 14 calendar days. You must report cost and utilization data to FAIRS at the end of every quarter of the fiscal year (December 31, March 31, June 30, and September 30). However, you may submit your information to FAIRS on a daily, weekly, or monthly basis. To provide enough time to calculate your cost and utilization data, you may report any one quarter's cost and utilization in the following quarter, as follows:

Quarter	Submit
QTR 1—October 1—December 31	Federal inventory for QTR 1. Federal cost and utilization for previous QTR 4. CAS cost and utilization for previous QTR 4.
QTR 2—January 1—March 31	Federal inventory for QTR 2. Federal cost and utilization for QTR 1. CAS cost and utilization for QTR 1.
QTR 3—April 1—June 30	Federal inventory for QTR 3. Federal cost and utilization for QTR 2. CAS cost and utilization for QTR 2.
QTR 4—July 1—September 30	Federal inventory for QTR 4. Federal cost and utilization for QTR 3. CAS cost and utilization for QTR 3.

Federal Inventory Data

§ 102–33.410 What are Federal inventory data?

Federal inventory data include information on each of the operational and non-operational Federal aircraft that you own, bail, borrow, or loan. See the ''FAIRS User's Manual,'' published by GSA, Aircraft Management Policy Division (MTA), 1800 F Street, NW., Washington, DC 20405, for a complete listing and definitions of the FAIRS Federal inventory data elements.

§ 102–33.415 When may we declassify an aircraft and remove it from our Federal aircraft inventory?

When an aircraft is lost or destroyed, or is otherwise non-operational and you want to retain it, you may declassify it and remove it from your Federal aircraft inventory. When you declassify an aircraft, you remove the data plate permanently, and the resulting ''aircraft parts or other property'' are no longer considered an aircraft. See §§ 102–33.415 through 102–33.420 for rules on declassifying aircraft, and see part 102–36 or 102–37 of this subchapter B on reporting declassified aircraft as excess.

§ 102–33.420 How must we declassify an aircraft?

To declassify an aircraft, you must—

(a) Send a letter to GSA, Aircraft Management Policy Division (MTA), 1800 F Street, NW., Washington, DC 20405, requesting approval to declassify the aircraft and stating that the aircraft is non-operational (which includes lost or destroyed). In this letter, identify the Federal Supply Classification (FSC) group(s) that the declassified aircraft/parts will fall under if applicable, describe the condition of the aircraft (crash-damaged, unrecoverable, parts unavailable, etc.), and include photographs as appropriate.

(b) Within 14 calendar days of receiving GSA's approval to declassify the aircraft—

(1) Following applicable Federal Aviation Regulations (14 CFR 45.13), request approval from your local FAA Flight Standards District Office (FSDO) to remove the manufacturer's data plate;

(2) Within 14 calendar days of receiving approval from FAA to remove the data plate, inform GSA (MTA) of FAA's approval, send the data plate by courier or registered mail to the FAA, as directed by your FSDO, and remove any Certificate of Airworthiness and the aircraft's registration form from the aircraft, complete the reverse side of the registration form, and send both documents to the FAA.

(c) Delete the aircraft from your FAIRS inventory records and update your personal property records, deleting the declassified aircraft from the aircraft category and adding it to another Federal Supply Classification group or groups, as appropriate.

Federal Aircraft Cost and Utilization Data

§ 102–33.425 What Federal aircraft cost and utilization data must we report?

You must report certain costs for each of your Federal aircraft and the number of hours that you flew each aircraft. In reporting the costs of your Federal aircraft, you must report both the amounts you paid as Federal costs, which are for services the Government provides, and the amounts you paid as commercial costs in support of your Federal aircraft. For a list and definitions of the Federal aircraft cost and utilization data elements, see the ''FAIRS User's Manual,'' which is available from GSA, Aircraft Management Policy Division (MTA), 1800 F Street, NW., Washington, DC 20405.

§ 102–33.430 Who must report Federal aircraft cost and utilization data?

Executive agencies, except the Armed Forces and U.S. intelligence agencies, must report Federal cost and utilization data on all Federal aircraft. Agencies should report Federal cost and utilization data for loaned aircraft only if Federal money was expended on the aircraft.

Commercial Aviation Services (CAS) Cost and Utilization Data

§ 102–33.435 What CAS cost and utilization data must we report?

You must report the costs and flying hours for each CAS aircraft you hire. You must also report the costs and contractual periods for related aviation services that you hire (*i.e.*, by contract or through an inter-service support agreement (ISSA)). Report related aviation services that you hire commercially in support of Federal aircraft as ''paid out'' Federal aircraft costs—do not report them as CAS. See the ''FAIRS User's Manual,'' available from GSA, Aircraft Management Policy Division (MTA), 1800 F Street, NW., Washington, DC 20405 for a complete description of the CAS data elements reportable to FAIRS.

§ 102–33.440 Who must report CAS cost and utilization data?

Executive agencies, except the Armed Forces and U.S. intelligence agencies, must report CAS cost and utilization data. You must report CAS cost and utilization data if your agency makes payments to—

(a) Charter or rent aircraft;

(b) Lease or lease-purchase aircraft;

(c) Hire aircraft and related services through an ISSA or a full service contract; or

(d) Obtain related aviation services through an ISSA or by contract except when you use the services in support of Federal aircraft.

Accident and Incident Data

§ 102–33.445 What accident and incident data must we report?

You must report within 14 calendar days to GSA, Aircraft Management Policy Division (MTA), 1800 F Street, NW., Washington, DC 20405, all aviation accidents and incidents that your agency is required to report to the NTSB. You may also report other incident information. The GSA and the ICAP will use the collected accident/incident information in conjunction with FAIRS' data, such as flying hours and missions, to calculate safety statistics for the Federal aviation community and to share safety lessons-learned.

§ 102–33.450 How must we report accident and incident data?

You must report accident and incident data through the ICAP Aviation Accident and Incident Reporting System (AAIRS), which is accessible from the Internet. Instructions for using the system and the data elements and definitions for accident/incident reporting are available through the system or from GSA, Aircraft Management Policy Division (MTA), 1800 F Street, NW., Washington, DC 20405.

Common Aviation Management Information Standard (C–AMIS)

§ 102–33.455 What is C–AMIS?

Common Aviation Management Information Standard (C–AMIS), jointly written by the ICAP and GSA and available from GSA, Aircraft Management Policy Division (MTA), 1800 F Street, NW., Washington, DC 20405, is a guide to assist agencies in developing or modernizing their internal aviation management information systems. C–AMIS includes standard specifications and data definitions related to Federal aviation operations.

§ 102–33.460 What is our responsibility in relation to C–AMIS?

If you use a management information system to provide data to FAIRS by batch upload, you are responsible for ensuring that your system is C–AMIS-compliant. For more information on compliance with C–AMIS, contact GSA, Aircraft Management Policy Division (MTA), 1800 F Street, NW., Washington, DC 20405.

Dated: September 11, 2002.

Stephen A. Perry,

Administrator of General Services.

[FR Doc. 02–26841 Filed 11–5–02; 8:45 am]

BILLING CODE 6820–23–P

Federal Register

Wednesday,
November 6, 2002

Part IV

Department of Defense
General Services Administration
National Aeronautics and Space Administration

48 CFR Parts 1, et al.

Federal Acquisition Regulation; Elimination of the Standard Form 129, Solicitation Mailing List Application; Proposed Rule

DEPARTMENT OF DEFENSE

GENERAL SERVICES ADMINISTRATION

NATIONAL AERONAUTICS AND SPACE ADMINISTRATION

48 CFR Parts 1, 5, 14, 19, 22, 36, 52, and 53

[FAR Case 2001–032]

RIN: 9000–AJ50

Federal Acquisition Regulation; Elimination of the Standard Form 129, Solicitation Mailing List Application

AGENCIES: Department of Defense (DoD), General Services Administration (GSA), and National Aeronautics and Space Administration (NASA).

ACTION: Proposed rule.

SUMMARY: The Civilian Agency Acquisition Council and the Defense Acquisition Regulations Council (Councils) are proposing to amend the Federal Acquisition Regulation (FAR) to remove the requirement for contracting offices to establish and maintain manual solicitation mailing lists and the need to use the Standard Form (SF 129, Solicitation Mailing List Application).

DATES: Interested parties should submit comments in writing on or before January 6, 2003 to be considered in the formulation of a final rule.

ADDRESSES: Submit written comments to—General Services Administration, FAR Secretariat (MVA), 1800 F Street, NW, Room 4035, ATTN: Laurie Duarte, Washington, DC 20405. Submit electronic comments via the Internet to— *farcase.2001–032@gsa.gov.*

Please submit comments only and cite FAR case 2001–032 in all correspondence related to this case.

FOR FURTHER INFORMATION CONTACT: The FAR Secretariat, Room 4035, GS Building, Washington, DC, 20405, at (202) 501–4755 for information pertaining to status or publication schedules. For clarification of content, contact Mr. Ralph De Stefano, Procurement Analyst, at (202) 501–1758. Please cite FAR case 2001–032.

SUPPLEMENTARY INFORMATION:

A. Background

In order to broaden use and reliance on e-business applications, the Councils are working with the Office of Federal Procurement Policy to eliminate the need to maintain paper-based sources of contractor information. As part of this effort, the Councils are proposing to eliminate the SF 129, Solicitation Mailing List Application.

The SF 129 was created to enable contracting activities to obtain information from sources to develop a solicitation mailing list. At the time the form was developed, manual processes were the only means available to assure access to adequate sources of supplies and services. Today, by sharp contrast, there are multiple tools available to agencies that can provide the functionality of the SF 129, but in a more efficient and effective manner. With the Administration's encouragement, agencies are taking advantage of these tools.

For example, many agencies now require potential contractors to register in the Central Contractor Registration (CCR) system, a centrally located, searchable database, accessible via the Internet, as their tool of choice for developing, maintaining, and providing sources for future procurements. The CCR database enables prospective contractors to update their information in one place via a website (*http://www.CCR2000.com.gov*). As a single validated source of data on contractors doing business with the Government, contracting officers are now able to access, via the Internet, contractor data and industry information less expensively, and more efficiently identify sources for contracting opportunities. Additionally, information obtained manually on the SF 129 may now be obtained electronically through the Procurement Marketing and Access Network, ''PRO–NET,'' *http://pro-net.sba.gov.* PRO–NET is an electronic gateway of procurement information for and about small businesses operated by the Small Business Administration. It is a search engine for contracting officers, a marketing tool for small firms, and a link to procurement opportunities and important information. Furthermore, agencies are continually working to develop new electronic means of matching interested businesses with Government contracting offices on ''FedBizOpps,'' *http://www.fedbizopps.gov,* the designated single Governmentwide point of entry for public access to notices of procurement actions over $25,000. FedBizOpps.gov, through its interested vendors list, has the capability to generate a list of vendors who are interested in a specific solicitation for purposes of teaming opportunities, subcontracting opportunities, and other business relationships. In light of these electronic initiatives, we propose to eliminate the manual collection of contractor data using the SF 129.

This is not a significant regulatory action and, therefore, was not subject to review under Section 6(b) of Executive Order 12866, Regulatory Planning and Review, dated September 30, 1993. This rule is not a major rule under 5 U.S.C. 804.

B. Regulatory Flexibility Act

The Councils do not expect this proposed rule to have a significant economic impact on a substantial number of small entities within the meaning of the Regulatory FlexibilityAct, 5 U.S.C. 601, *et seq.*, because the rule substitutes efficient electronic databases for solicitation mailing lists and the SF 129, Solicitation Mailing List Application. An Initial Regulatory Flexibility Analysis (IRFA) has been prepared and will be provided to the Chief Counsel for Advocacy for the Small Business Administration. The analysis is summarized as follows:

This proposed rule would eliminate the SF 129, Solicitation Mailing List Application, so that agencies may rely exclusively on more efficient means to access sources of supplies. For example, information obtained manually on the SF 129 can be obtained more efficiently through the Procurement Marketing and Access PRO–NET, which is sponsored by the Small Business Administration. PRO–NET is an electronic gateway of procurement information for and about small businesses. It is a search engine for contracting officers, a marketing tool for small firms, and a link to procurement opportunities and important information.

The proposed rule, when finalized, will apply to all large and small entities that seek contracts that are awarded by executive agencies. For fiscal year 2001, there were 176,258 contract actions awarded over the simplified acquisition threshold. The proposed rule imposes no reporting, recordkeeping, or other compliance requirements.

The FAR Secretariat has submitted a copy of the IRFA to the Chief Counsel for Advocacy of the Small Business Administration. A copy of the IRFA may be obtained from the FAR Secretariat. The Councils will consider comments from small entities concerning the affected FAR parts in accordance with 5 U.S.C. 610. Comments must be submitted separately and should cite 5 U.S.C 601, *et seq.* (FAR case 2001–032), in correspondence.

C. Paperwork Reduction Act

The Paperwork Reduction Act no longer applies because the proposed rule eliminates reporting and recordkeeping requirements currently approved under OMB Control Number 9000–0002. This rule will reduce the

current OMB inventory by 464,000 hours.

List of Subjects in 48 CFR Parts 1, 5, 14, 19, 22, 36, 52, and 53

Government procurement.

Dated: November 1, 2002.

Al Matera,

Director, Acquisition Policy Division.

Therefore, DoD, GSA, and NASA propose amending 48 CFR parts 1, 5, 14, 19, 22, 36, 52, and 53 as set forth below:

1. The authority citation for 48 CFR parts 1, 5, 14, 19, 22, 36, 52, and 53 continues to read as follows:

Authority: 40 U.S.C. 486(c); 10 U.S.C. chapter 137; and 42 U.S.C. 2473(c).

PART 1—FEDERAL ACQUISITION REGULATIONS SYSTEM

1.106 [Amended]

2. Amend section 1.106 in the table following the introductory paragraph by removing from FAR segment 14.205 its corresponding OMB Control Number ''9000–0002'' and adding ''9000–0037'' in its place; and by removing the FAR segments ''14.205–4(c)'' and ''SF 129'' and their corresponding OMB Control Numbers ''9000–0037'' and ''9000–0002'', respectively.

PART 5—PUBLICIZING CONTRACT ACTIONS

3. Amend section 5.205 by revising the fourth sentence of paragraph (a) to read as follows:

5.205 Special situations.

(a) * * * Contracting officers must consider potential sources which respond to advance notices for a subsequent solicitation. * * *

* * * * *

5.403 [Amended]

4. Amend section 5.403 by removing paragraph designation ''(a)'' and paragraph (b).

PART 14—SEALED BIDDING

14.103–1 [Amended]

5. Amend section 14.103–1 by removing paragraph (b) and redesignating paragraphs ''(c)'' and ''(d)'' as ''(b)'' and ''(c)'', respectively.

6. Amend section 14.201–6 by revising paragraph (e) to read as follows:

14.201–6 Solicitation provisions.

* * * * *

(e) Insert in all invitations for bids the provision at 52.214–10, Contract Award—Sealed Bidding.

* * * * *

7. Amend section 14.203–1 by revising the first sentence to read as follows:

14.203–1 Transmittal to prospective bidders.

Invitations for bids or presolicitation notices shall be provided in accordance with 5.102. * * *

8. Revise section 14.205 to read as follows:

14.205 Presolicitation notices.

In lieu of initially forwarding complete bid sets, the contracting officer may send presolicitation notices to concerns. The notice shall—

(a) Specify the final date for receipt of requests for a complete bid set;

(b) Briefly describe the requirement and furnish other essential information to enable concerns to determine whether they have an interest in the invitation; and

(c) Normally not include drawings, plans, and specifications. The return date of the notice must be sufficiently in advance of the mailing date of the invitation for bids to permit an accurate estimate of the number of bid sets required. Bid sets shall be sent to concerns that request them in response to the notice.

14.205–1 through 14.205–5 [Removed]

9. Remove sections 14.205–1, 14.205–2, 14.205–3, 14.205-4, and 14.205–5.

14.211 [Amended]

10. Amend section 14.211 in the first sentence of paragraph (a) by removing ''14.205–4(c)'' and adding ''14.205'' in its place.

11. Amend section 14.503–1 by revising the introductory text of paragraph (a) to read as follows:

14.503–1 Step one.

(a) Requests for technical proposals shall be synopsized in accordance with Part 5. The request must include, as a minimum, the following:

* * * * *

PART 19—SMALL BUSINESS PROGRAMS

19.202–2 [Amended]

12. Amend section 19.202–2 by removing paragraph (a) and redesignating paragraphs ''(b)'' and ''(c)'' as ''(a)'' and ''(b)'', respectively.

19.202–4 [Amended]

13. Amend section 19.202–4 by removing paragraph (c) and redesignating paragraph (d) as (c).

19.402 [Amended]

14. Amend section 19.402 in paragraph (c)(3) by removing the words ''on solicitation mailing lists or''.

PART 22—APPLICATION OF LABOR LAWS TO GOVERNMENT ACQUISITIONS

15. Amend section 22.1009–2 by revising paragraph (b) to read as follows:

22.1009–2 Attempt to identify possible places of performance.

* * * * *

(b) Databases available via the Internet for lists of prospective offerors and contractors.

* * * * *

PART 36—CONSTRUCTION AND ARCHITECT-ENGINEER CONTRACTS

36.213–3 [Amended]

16. Amend section 36.213–3 in the parenthetical in paragraph (d) by removing ''14.205 and''.

PART 52—SOLICITATION PROVISIONS AND CONTRACT CLAUSES

52.214–9 [Removed and Reserved]

17. Remove and reserve section 52.214–9.

52.214.10 [Amended]

18. Amend section 52.214–10 in the prescription by removing ''14.201–6(e)(2)'' and adding ''14.201–6(c)'' in its place.

PART 53—FORMS

53.214 [Amended]

19. Amend section 53.214 by removing and reserving paragraph (e).

53.301–129 [Removed]

20. Remove section 53.301–129.

[FR Doc. 02–28205 Filed 11–5–02; 8:45 am]

BILLING CODE 6820–EP–P

Federal Register

Wednesday,
November 6, 2002

Part V

Department of Justice

Immigration and Naturalization Service

Registration of Certain Nonimmigrant Aliens From Designated Countries; Notice

DEPARTMENT OF JUSTICE

Immigration and Naturalization Service

[AG Order No. 2626–2002]

Registration of Certain Nonimmigrant Aliens From Designated Countries

AGENCY: Immigration and Naturalization Service, Justice.

ACTION: Notice.

SUMMARY: This Notice requires certain nonimmigrant aliens to appear before, register with, and provide requested information to the Immigration and Naturalization Service on or before December 16, 2002. It applies to certain nonimmigrant aliens from one of the countries designated in this Notice who were last admitted to the United States on or before September 10, 2002, and who will remain in the United States until at least December 16, 2002. The specific requirements are set forth in the Notice.

EFFECTIVE DATES: This Notice is effective on November 15, 2002. Aliens described in this Notice are required to register and provide additional information to the Immigration and Naturalization Service on or before December 16, 2002.

FOR FURTHER INFORMATION CONTACT: Dan Brown, Office of the General Counsel, Immigration and Naturalization Service, 425 I Street, NW., Room 6100, Washington, DC 20536, telephone (202) 514–2895.

SUPPLEMENTARY INFORMATION: Section 265(b) of the Immigration and Nationality Act (''Act''), as amended, 8 U.S.C. 1305(b), provides that

> [t]he Attorney General may in his discretion, upon ten days notice, require the natives of any one or more foreign states, or any class or group thereof, who are within the United States and who are required to be registered under this subchapter, to notify the Attorney General of their current addresses and furnish such additional information as the Attorney General may require.

Additionally, section 263(a) of the Act, 8 U.S.C. 1303(a), provides that the Attorney General may ''prescribe special regulations and forms for the registration and fingerprinting of * * * aliens of any other class not lawfully admitted to the United States for permanent residence.''

The Attorney General has previously exercised his authority under these and other provisions of the Act to establish special registration procedures under 8 CFR 264.1(f). 67 FR 52584 (Aug. 12, 2002). These requirements are known as the National Security Entry—Exit Registration System. In accordance with the authority set forth in 8 CFR 264.1(f)(4), the Attorney General has determined that certain nonimmigrant aliens specified in this Notice shall be registered and required to provide specific information. The Attorney General has the sole discretion to make this determination.

In light of recent events, and based on intelligence information available to the Attorney General, the Attorney General has determined that the aliens described in paragraph (a) of this Notice must appear before the Immigration and Naturalization Service (''Service'') and provide certain information. This Notice applies only to certain nonimmigrant aliens from one of the countries designated in this Notice who were last admitted to the United States on or before September 10, 2002, and who will remain until at least December 16, 2002. Based on intelligence information available to the Attorney General, the Attorney General has determined that registering all nonimmigrant aliens from the covered countries would not enhance national security. Moreover, the Attorney General has determined that it would not be administratively feasible at the present time to register all of the nonimmigrants from the specific countries covered by this Notice, and that the delay occasioned by registering all nonimmigrants from the countries covered by this Notice would jeopardize the national security. Accordingly, the Attorney General has determined that only males aged 16 years or older need to be registered at this time. Furthermore, the Attorney General has determined that aliens who have, prior to the date of publication of this Notice, applied for asylum, have already provided sufficient information in their applications for asylum, along with their fingerprints, to warrant exclusion from this Notice.

Although section 265(b) of the Act, 8 U.S.C. 1305(b), provides a minimum period of 10 days notice for covered aliens to provide their current address and other required information, this Notice allows an alien described by the Notice a period of more than 30 days to register. The Attorney General has determined that such additional time to register is in the best interests of the United States and has extended this time to register solely as a matter of discretion.

Finally, until further notice, once enrolled within the National Security Entry—Exit Registration System by registration under this Notice, an alien described in paragraph (a) of the Notice is required to register annually with the Service. All aliens described in paragraph (a) shall comply with all other provisions of 8 CFR 264.1(f)(5) through (f)(9).

A willful failure to comply with the requirements of this Notice constitutes a failure to maintain nonimmigrant status under section 237(a)(1)(C)(i) of the Act, 8 U.S.C. 1227(a)(1)(C)(i). See 8 CFR 214.1(f). Pursuant to section 237(a)(3)(A) of the Act, 8 U.S.C. 1227(a)(3)(A), an alien who fails to comply with the provisions of this Notice is deportable, unless the alien establishes to the satisfaction of the Attorney General that such failure was reasonably excusable or was not willful. Finally, if an alien subject to this Notice fails, without good cause, to comply with the requirement in 8 CFR 264.1(f)(8) that the alien must report to an inspecting officer of the Service when departing the United States, the alien shall thereafter be presumed to be inadmissible under, but not limited to, section 212(a)(3)(A)(ii) of the Act, 8 U.S.C. 1182(a)(3)(A)(ii). See 8 CFR 264.1(f)(8).

Notice of Requirements for Registration of Certain Nonimmigrant Aliens From Designated Countries

Pursuant to sections 261 through 266 of the Immigration and Nationality Act (''Act''), as amended, 8 U.S.C. 1302 through 1306, and particularly sections 263(a) and 265(b) of the Act, 8 U.S.C. 1303(a) and 8 U.S.C. 1305(b), and 8 CFR 264.1(f), I hereby order as follows:

(a) *Scope.* Except as provided in paragraph (g), an alien is required to register pursuant to this Notice if the alien:

(1) Is a male who was born on or before November 15, 1986;

(2) Is a national or citizen of one of the countries listed in paragraph (b) who was inspected by the Immigration and Naturalization Service and was last admitted to the United States as a nonimmigrant on or before the relevant date specified in paragraph (b); and

(3) Will remain in the United States at least until December 16, 2002.

(b) *Designated countries.* This Notice is applicable to nationals or citizens of Iran, Iraq, Libya, Sudan, or Syria who were inspected and last admitted to the United States on or before September 10, 2002. This Notice is applicable to any alien who is a national or citizen of a designated country, notwithstanding any dual nationality or citizenship.

(c) *Requirement to appear before an immigration officer.* All aliens described in paragraph (a) shall, on or before December 16, 2002, appear before an immigration officer at any of the locations listed in the appendix to this Notice.

(d) *Information to be provided.* All aliens described in paragraph (a) shall:

(1) Answer questions under oath before an immigration officer, which answers shall be recorded by the immigration officer;

(2) Present to such immigration officer:

(i) The alien's travel documents, including passport and the Form I–94 issued upon admission, and any other forms of government-issued identification;

(ii) Proof of residence, such as, but not limited to, title to land or a lease or a rental agreement, proof of matriculation at an educational institution, and proof of employment; and

(iii) Such other information as is requested by the immigration officer; and

(3) Shall be fingerprinted and photographed by the immigration officer.

(e) *Annual reporting obligations.* All aliens described in paragraph (a) shall appear, within 10 days of each anniversary of the date on which they were registered under this Notice, before an immigration officer at any of the locations listed in the appendix to this Notice and answer questions under oath. All aliens described in paragraph (a) shall comply with all other provisions of 8 CFR 264.1(f)(5)–(9).

(f) *Notice of Change of Address.* All aliens described in paragraph (a) shall advise the Immigration and Naturalization Service, through the filing of Form AR–11, of any change of address within 10 days of such change of address. If an alien fails to notify the Immigration and Naturalization Service in writing of a change of address and the new address, as required by section 265(a) of the Act, 8 U.S.C. 1305(a), the alien may be subject to prosecution under section 266(b) of the Act, 8 U.S.C. 1306(b), and may be deportable as provided in section 237(a)(3)(A) of the Act, 8 U.S.C. 1227(a)(3)(A). If it becomes necessary to place the alien in removal proceedings, the Immigration and Naturalization Service may use the most recent address provided by the alien for service of the Notice to Appear.

(g) *Inapplicability.* The requirements of this Notice do not apply to any alien who:

(1) Is presently in a nonimmigrant classification under section 101(a)(15)(A) or 101(a)(15)(G) of the Act, 8 U.S.C. 1101(a)(15)(A) or 8 U.S.C. 1101(a)(15)(G);

(2) Is lawfully admitted to the United States for permanent residence; or

(3) Has applied for asylum on or before November 6, 2002, or has been granted asylum, under section 208 of the Act, 8 U.S.C. 1158.

Dated: November 4, 2002.

John Ashcroft,

Attorney General.

Appendix

Designated INS Interviewing Offices for Special Registration

ALASKA—Anchorage, 620 East 10th Avenue, Anchorage, Alaska 99501
ARIZONA—Phoenix, 2035 North Central Avenue, Phoenix, Arizona 85004
ARIZONA—Tucson, 6431 South Country Club Road, Tucson, Arizona 85706–5907
ARKANSAS—Fort Smith, 4991 Old Greenwood Road, Fort Smith, Arkansas 72903
CALIFORNIA—Fresno, 865 Fulton Mall, Fresno, California 93721
CALIFORNIA—Los Angeles, 300 North Los Angeles Street, Room 2024, Los Angeles, California 90012
CALIFORNIA—Sacramento, 650 Capitol Mall, Sacramento, CA 95814
CALIFORNIA—San Bernardino, 655 West Rialto Avenue, San Bernardino,California 92410
CALIFORNIA—San Diego, 880 Front Street, Suite 1209, San Diego,California 92101
CALIFORNIA—San Francisco, 444 Washington Street, San Francisco,California 94111
CALIFORNIA—San Jose, 1887 Monterey Road, San Jose, California 95112
CALIFORNIA—Santa Ana, 34 Civic Center Plaza, Santa Ana, California 92701
COLORADO—Denver, 4730 Paris Street, Denver, CO 80239
CONNECTICUT—Hartford, 450 Main Street, 4th Floor, Hartford, Connecticut 06103
FLORIDA—Jacksonville, 4121 Southpoint Boulevard, Jacksonville, Florida 32216
FLORIDA—Miami, 7880 Biscayne Boulevard, Miami, Florida 33138
FLORIDA—Orlando, 9403 Tradeport Drive, Orlando, Florida 32827
FLORIDA—Tampa, 5524 West Cypress Street, Tampa, Florida 33607–1708
FLORIDA—West Palm Beach, 301 Broadway, Riviera Beach, Florida 33401
GEORGIA—Atlanta, 77 Forsyth Street, SW., Atlanta, Georgia 30303
GUAM—Agana, Sirena Plaza, Suite 100, 108 Hernan Cortez Avenue,Hagatna, Guam 96910
HAWAII—Honolulu, 595 Ala Moana Boulevard, Honolulu, Hawaii 96813
IDAHO—Boise, 1185 South Vinnell Way, Boise, Idaho 83709
ILLINOIS—Chicago, 230 South Dearborn, 2nd Floor, Chicago, Illinois 60604
INDIANA—Indianapolis, 950 N. Meridian Street, Room 400, Indianapolis, Indiana 46204
IOWA—Des Moines, 210 Walnut Street, Room 369, Des Moines, Iowa 50309
KANSAS—Wichita, 271 West 3rd Street North, Suite 1050, Wichita, Kansas 67202–1212
KENTUCKY—Louisville, 601 West Broadway, Room 390, Louisville, Kentucky 40202
LOUISIANA—New Orleans, 701 Loyola Avenue, New Orleans, Louisiana 70113
MAINE—Portland, 176 Gannet Drive, South Portland, Maine 04106
MARYLAND—Baltimore, 31 Hopkins Place, Baltimore, Maryland 21201
MASSACHUSETTS—Boston, Government Center, JFK Federal Building, Boston, Massachusetts 02203
MICHIGAN—Detroit, 333 Mount Elliot Street, Detroit, Michigan 48207–4381
MINNESOTA—Minneapolis, 2901 Metro Drive, Suite 100, Bloomington, Minnesota 55425
MISSOURI—Kansas City, 9747 Northwest Conant Avenue, Kansas City, Missouri 64153
MISSOURI—St. Louis, 1222 Spruce Street, St. Louis, Missouri 63103
MONTANA—Helena, 2800 Skyway Drive, Helena, Montana 59601
NEBRASKA—Omaha, 3736 South 132nd Street, Omaha, Nebraska 68144
NEVADA—Las Vegas, 3373 Pepper Lane, Las Vegas, NV 89120–2739
NEVADA—Reno, 1352 Corporate Boulevard, Reno, Nevada 85902
NEW HAMPSHIRE—Manchester, 803 Canal Street, Manchester, New Hampshire 03101
NEW JERSEY—Cherry Hill, 1886 Greentree Road, Cherry Hill, New Jersey 08003
NEW JERSEY—Newark, 970 Broad Street, Newark, New Jersey 07102
NEW MEXICO—Albuquerque, 1720 Randolph Road SE, Albuquerque, New Mexico 87106
NEW YORK—Albany, 1086 Troy-Schenectady Road, Latham, New York 12110
NEW YORK—Buffalo, 130 Delaware Avenue, Buffalo, New York 14202
NEW YORK—Garden City, 711 Stewart Avenue, Garden City, New York 11530
NEW YORK—New York City, 26 Federal Plaza, New York, New York 10278
NORTH CAROLINA—Charlotte, 210 E. Woodlawn Road, Building 6, Suite 138, Charlotte, North Carolina 28217
OHIO—Cincinnati, 550 Main Street, Room 4001, Cincinnati, Ohio 45202
OHIO—Cleveland, 1240 East Ninth Street, Cleveland, Ohio 44199
OHIO—Columbus, 50 West Broad Street, Suite 304D, Columbus, Ohio 43215
OKLAHOMA—Oklahoma City, 4149 Highline Boulevard, Suite 300, Oklahoma City, Oklahoma 73108
OREGON—Portland, 511 Northwest Broadway, Portland, Oregon 97209
PENNSYLVANIA—Philadelphia, 1600 Callowhill Street, Philadelphia, Pennsylvania 19130
PENNSYLVANIA—Pittsburgh, 1000 Liberty Avenue, Room 214, Pittsburgh, Pennsylvania 15222
PUERTO RICO—San Juan, 7 Tabonuco Street, Guaynabo, Puerto Rico 00968
RHODE ISLAND—Providence, 200 Dyer Street, Providence, Rhode Island 02903
ST. CROIX—Christiansted, Sunny Isle Shopping Center, Christiansted, St. Croix, U.S. Virgin Islands 00820
ST. THOMAS—Charlotte Amalie, Nisky Center, Suite 1A, First Floor South, Charlotte Amalie, St. Thomas, U.S. Virgin Islands 00802
SOUTH CAROLINA—Charleston, 170 Meeting Street, Fifth Floor, Charleston, South Carolina 29401

SOUTH CAROLINA—Greer, 142–D West Philips Road, Greer, South Carolina 29650
TENNESSEE—Memphis, 1314 Sycamore View Road, Suite 100, Memphis, Tennessee 38134
TEXAS—Dallas, 8101 North Stemmons Freeway, Dallas, Texas 75247
TEXAS—El Paso, 1545 Hawkins Boulevard, El Paso, Texas 79925
TEXAS—Harlingen, 2102 Teege Avenue, Harlingen, Texas 78550–4667
TEXAS—Houston 126 Northpoint Drive, Houston, Texas 77060
TEXAS—San Antonio, 8904 Fourwinds Drive, San Antonio, Texas 78239
UTAH—Salt Lake City, 5272 South College Drive, #100, Murray, Utah 84123
VERMONT—St. Albans, 64 Gricebrook Road, St. Albans, Vermont 05478
VIRGINIA—Norfolk, 5280 Henneman Drive, Norfolk, Virginia 23513
WASHINGTON, D.C., 4420 North Fairfax Drive, Arlington, Virginia 22203
WASHINGTON—Seattle, 815 Airport Way, South Seattle, Washington 98134
WASHINGTON—Spokane, 920 W. Riverside Room 691, Spokane, Washington 99201
WASHINGTON—Yakima, 417 E. Chestnut, Yakima, Washington 98901
WEST VIRGINIA—Charleston, 210 Kanawha Boulevard West, Charleston, West Virginia 25302
WISCONSIN—Milwaukee, 310 East Knapp Street, Milwaukee, Wisconsin 53202

[FR Doc. 02–28381 Filed 11–5–02; 11:36 am]

BILLING CODE 4410–10–P

Federal Register

Wednesday,
November 6, 2002

Part VI

The President

Proclamation 7619—National Adoption Month, 2002

Proclamation 7620—National American Indian Heritage Month, 2002

Proclamation 7621—National Hospice Month, 2002

Federal Register
Vol. 67, No. 215
Wednesday, November 6, 2002

Presidential Documents

Title 3—

The President

Proclamation 7619 of November 1, 2002

National Adoption Month, 2002

By the President of the United States of America

A Proclamation

Every year, thousands of American families are blessed by adoption. Whether through domestic or international adoption or through the adoption of children from foster care, the love of compassionate families embraces children of all ages and from every background. During National Adoption Month, we recognize the heartfelt commitment of these good citizens, and we renew our pledge to make adoption a more accessible and positive path for American families.

Children thrive in loving families where they are nurtured, comforted, and protected. We are making important progress in placing children in foster care with adoptive families; and the overall number of children being adopted continues to rise. In the past 5 years, adoptions have increased dramatically; and thus far in 2002, tens of thousands of children have already been adopted.

Twenty-three States and the Commonwealth of Puerto Rico received adoption incentive awards in FY 2001 for increasing the number of children they placed from foster care into permanent adoptive homes. These recipients have reinvested their bonuses to help improve their respective adoption and child welfare programs. Americans also continue to welcome children from other countries into their homes through international adoptions. Last year, families in the United States adopted over 19,000 children from around the world.

Despite the progress we have made in increasing our adoption rate, we still have much work to do. More than 130,000 children, ranging from toddlers to teenagers, still remain in foster care awaiting adoption. While foster parents offer temporary essential care, the children for whom they care need the stability of a permanent family. It is often challenging to find families for older children and those children who have special needs. Yet they deserve a future with a nurturing family.

To help States promote adoption and support families who adopt, I signed a tax relief bill last year that permanently eases the financial burden on families that adopt children. And in January 2002, I signed into law a bill to extend and expand the Promoting Safe and Stable Families Program. Through this legislation, we are strengthening families by promoting adoption, offering post-adoptive services to families that adopt, and providing education and training vouchers to older adopted children and foster youth.

In July 2002, my Administration launched the AdoptUSKids national campaign to increase awareness about adoption and its role in helping all children reach their full potential. We have also created the first Federal adoption photo-listing web site devoted to children awaiting adoption and families who adopt, www.AdoptUSKids.org. During its first year, the web site will feature pictures and profiles of more than 6,500 children awaiting adoption, as well as a database of approved adoptive families. This unique web site will help to connect children from across the country with loving adoptive families, and it will also serve as a great resource for all adoptive families.

On November 23, dozens of communities will gather in courtrooms across the country to celebrate National Adoption Day. On this momentous day, thousands of adoptions will be finalized and celebrated. These efforts demonstrate our Nation's dedication to ensuring that every child can thrive in a secure, loving, and stable home.

Through adoption, Americans can forever change not only a child's life but also their own. By providing children in need with the opportunity to grow and succeed through adoption, we can help them become confident, compassionate, and successful members of society.

NOW, THEREFORE, I, GEORGE W. BUSH, President of the United States of America, by virtue of the authority vested in me by the Constitution and laws of the United States, do hereby proclaim November 2002 as National Adoption Month. I call on all Americans to observe this month with appropriate programs and activities to honor adoptive families, and to participate in efforts to find permanent homes for waiting children.

IN WITNESS WHEREOF, I have hereunto set my hand this first day of November, in the year of our Lord two thousand two, and of the Independence of the United States of America the two hundred and twenty-seventh.

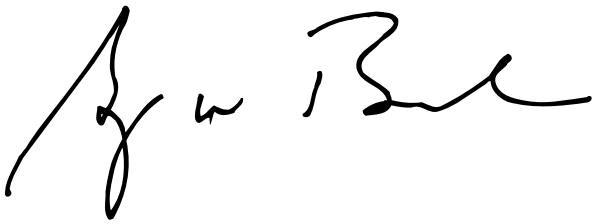

[FR Doc. 02–28432
Filed 11–5–02–8:45 am]
Billing code 3195–01–P

Presidential Documents

Proclamation 7620 of November 1, 2002

National American Indian Heritage Month, 2002

By the President of the United States of America

A Proclamation

During American Indian Heritage Month, we celebrate the rich cultural traditions and proud ancestry of American Indians and Alaska Natives, and we recognize the vital contributions these groups have made to the strength and diversity of our society.

American Indians and Alaska Natives have played a central role in our history. In 1805 and 1806, Sakajawea, a Shoshone Indian woman, helped guide Lewis and Clark on their historic expedition to explore the uncharted West. This remarkable journey, known as the ''Voyage of Discovery,'' would not have been possible without her efforts, and today she remains a proud symbol of American Indian courage and strength.

We are also grateful to the Navajo Codetalkers for their service during World War II. Participating in every assault the U.S. Marines conducted in the Pacific from 1942–1945, the Navajo Codetalkers relayed secret messages that helped our Nation and the allies secure victory. The Congress recognized these heroes by authorizing the President to award them Congressional Gold Medals, which I was honored to present last year. These examples of our true American spirit reflect our shared history and serve as reminders of the unique heritage of American Indians and Alaska Natives. Upon its completion on the National Mall, the Smithsonian Institution's National Museum of the American Indian will help educate all Americans about the lives, contributions, and culture of our Native peoples.

Education is essential to the future success of tribal communities. We will work together to ensure that our Indian education programs offer high-quality instruction and job training that contribute to the vitality of our Native American communities. We will also work to maintain the legacy of American Indians and Alaska Natives by preserving irreplaceable languages and cultural traditions.

To enhance our efforts to help Indian nations be self-governing, self-supporting, and self-reliant, my Administration will continue to honor tribal sovereignty by working on a government-to-government basis with American Indians and Alaska Natives. We will honor the rights of Indian tribes and work to protect and enhance tribal resources.

My Administration is working to increase employment and expand economic opportunities for all Native Americans. Several Federal agencies recently participated in the National Summit on Emerging Tribal Economies to help us accomplish this goal. In order to build upon this effort, my Administration will work to promote cooperation and coordination among Federal agencies for the purpose of fostering greater economic development of tribal communities. By working together on important economic initiatives, we will strengthen America by building a future of hope and promise for all Native Americans.

NOW, THEREFORE, I, GEORGE W. BUSH, President of the United States of America, by virtue of the authority vested in me by the Constitution and laws of the United States, do hereby proclaim November 2002 as National

American Indian Heritage Month. I call upon all Americans to commemorate this month with appropriate programs and activities.

IN WITNESS WHEREOF, I have hereunto set my hand this first day of November, in the year of our Lord two thousand two, and of the Independence of the United States of America the two hundred and twenty-seventh.

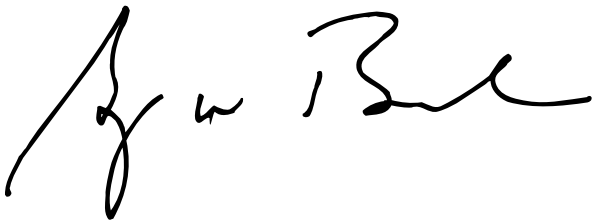

[FR Doc. 02–28433
Filed 11–5–02; 8:46 am]
Billing code 3195–01–P

Presidential Documents

Proclamation 7621 of November 1, 2002

National Hospice Month, 2002

By the President of the United States of America

A Proclamation

Hospice organizations provide people who are near the end of their lives with family-centered, quality care, that emphasizes compassion, independence, respect, and dignity. During National Hospice Month, our Nation pays tribute to hospice care and the persons and organizations involved with it, by recognizing and honoring its value and importance for people who are dying, for their families and friends, and for our communities.

Hospice has emerged as a successful model of care that helps terminally ill individuals achieve practical, physical, psychological, and spiritual goals. According to the National Hospice and Palliative Care Organization (NHPCO), in 2001, an estimated 3,200 operating hospice programs in the United States admitted about 775,000 patients. Hospice care relies upon a team of committed physicians, nurses, medical social workers, therapists, counselors, and volunteers. This team provides medical services that are designed to improve the comfort of the patient, manage symptoms, provide proper nutrition, and deal with other difficulties such as emotional distress and grief. Hospice care also provides important emotional and spiritual support to families and friends as they cope with their impending loss.

While we have made great progress in encouraging hospice care, much work remains to be done to increase awareness of hospice and its benefits. The NHPCO reports that in 2000, 2.4 million people in our Nation died. It is estimated that one in four used hospice care and services. Also, many people at the end of life are referred to hospice only a few days before death. By strengthening and expanding hospice programs and working to promote, where appropriate, their services as a positive alternative for terminally ill patients, we can make a difference in the lives of countless Americans.

As we observe National Hospice Month, we applaud hospice organizations, health professionals, and other caregivers for their dedication to ensuring respect and quality of life for all. We also reaffirm our commitment as a Nation to honoring the dignity of every person and to promoting compassion and concern for our fellow citizens.

NOW, THEREFORE, I, GEORGE W. BUSH, President of the United States of America, by virtue of the authority vested in me by the Constitution and laws of the United States, do hereby proclaim November 2002 as National Hospice Month. I encourage Americans to increase their awareness of the importance and availability of hospice service and to observe this month with appropriate activities and programs.

IN WITNESS WHEREOF, I have hereunto set my hand this first day of November, in the year of our Lord two thousand two, and of the Independence of the United States of America the two hundred and twenty-seventh.

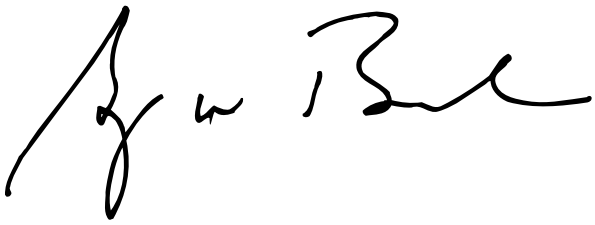

[FR Doc. 02–28434
Filed 11–5–02; 8:46 am]
Billing code 3195–01–P

Reader Aids

Federal Register

Vol. 67, No. 215

Wednesday, November 6, 2002

CUSTOMER SERVICE AND INFORMATION

Federal Register/Code of Federal Regulations	
General Information, indexes and other finding aids	**202–741–6000**
Laws	**741–6000**
Presidential Documents	
Executive orders and proclamations	**741–6000**
The United States Government Manual	**741–6000**
Other Services	
Electronic and on-line services (voice)	**741–6020**
Privacy Act Compilation	**741–6064**
Public Laws Update Service (numbers, dates, etc.)	**741–6043**
TTY for the deaf-and-hard-of-hearing	**741–6086**

ELECTRONIC RESEARCH

World Wide Web

Full text of the daily Federal Register, CFR and other publications is located at: **http://www.access.gpo.gov/nara**

Federal Register information and research tools, including Public Inspection List, indexes, and links to GPO Access are located at: **http://www.archives.gov/federal__register/**

E-mail

FEDREGTOC-L (Federal Register Table of Contents LISTSERV) is an open e-mail service that provides subscribers with a digital form of the Federal Register Table of Contents. The digital form of the Federal Register Table of Contents includes HTML and PDF links to the full text of each document.

To join or leave, go to **http://listserv.access.gpo.gov** and select *Online mailing list archives, FEDREGTOC-L, Join or leave the list (or change settings);* then follow the instructions.

PENS (Public Law Electronic Notification Service) is an e-mail service that notifies subscribers of recently enacted laws.

To subscribe, go to **http://hydra.gsa.gov/archives/publaws-l.html** and select *Join or leave the list* (or change settings); then follow the instructions.

FEDREGTOC-L and **PENS** are mailing lists only. We cannot respond to specific inquiries.

Reference questions. Send questions and comments about the Federal Register system to: **info@fedreg.nara.gov**

The Federal Register staff cannot interpret specific documents or regulations.

FEDERAL REGISTER PAGES AND DATE, NOVEMBER

66527–67088 1
67089–67282 4
67283–67508 5
67509–67776 6

CFR PARTS AFFECTED DURING NOVEMBER

At the end of each month, the Office of the Federal Register publishes separately a List of CFR Sections Affected (LSA), which lists parts and sections affected by documents published since the revision date of each title.

3 CFR

Proclamations:
7615 67087
7616 67283
7617 67293
7618 67295
7619 67771
7620 67773
7621 67775

5 CFR

8301 67089

7 CFR

301 67509
905 66527
945 66529
980 66529
Proposed Rules:
54 66576
956 66578

8 CFR

100 66532
103 66532
236 66532
245a 66532
274a 66532
299 66532

9 CFR

53 67089
94 66533

10 CFR

Proposed Rules:
1 67096
2 67096
7 67096
9 67096
19 67096
20 67096
26 67096
30 67096
31 67096
33 67096
39 67096
50 ..... 66578, 66588, 67096
51 67096
52 67096
54 67096
55 67096
71 67096
75 67096
100 67096
110 67096

12 CFR

722 67102
1750 66533

13 CFR

121 ..... 67102, 67253

14 CFR

39 ..... 66540, 66541, 66544, 66547, 66548, 67104, 67297, 67510, 67513, 67516, 67518
71 67253
97 ..... 67106, 67299
Proposed Rules:
39 67131
71 66592

16 CFR

1700 66550

17 CFR

1 67445
41 67445
190 67445
240 67445
Proposed Rules:
240 67496

18 CFR

101 67692
201 67692
352 67692
Proposed Rules:
35 67339

21 CFR

510 ..... 67520, 67521
520 67521
522 67521
524 67521
Proposed Rules:
314 66593
589 67572

22 CFR

41 67108

24 CFR

982 67522

26 CFR

Proposed Rules:
1 67132
300 67573
301 67132

27 CFR

Proposed Rules:
40 67340
275 67340

30 CFR

915 67522
917 67524
938 67528
943 67531
944 67534
950 67540
Proposed Rules:
948 67576

31 CFR

103 67547

33 CFR

117 ....66552, 66553, 67108, 67549, 67551
165....67110, 67301
401....67112

Proposed Rules:

165....66595, 67342

34 CFR

2600....67048
2668....67048
2673....67048
2674....67048
2675....67048
2682....67048
2685....67048
2690....67048
2694....67048

38 CFR

217....66554

39 CFR

3001....67552

40 CFR

2....67303
52 ....66555, 67113, 67313, 67563
62....67316
80....67317
81....66555
180....66561, 67566

Proposed Rules:

52 ....66598, 67345, 67580
62....67348
81....66598
82....67581

41 CFR

101–37....67742
102–33....67742

42 CFR

405....66718
410....67318
414....67318
419....66718

44 CFR

64....67117
65....67119, 67123
67 ....67125, 67126, 67128

Proposed Rules:

67 ....67132, 67133, 67135

47 CFR

1....67318, 67567
73....67568

Proposed Rules:

90....67348

48 CFR

Proposed Rules:

1....67762
5....67762
9....67282
14....67762
19....67762
22....67762
36....67762
52....67762
53....67762

49 CFR

172....66571
174....66571
175....66571
176....66571
177....66571
575....67491

Proposed Rules:

171....66598
571....67373
1520....67382
1540....67382
1542....67382
1544....67382
1546....67382
1548....67382

50 CFR

20....67256
648....67568
679....66575

Proposed Rules:

17....66599, 67586
300....67139
600....67140

REMINDERS

The items in this list were editorially compiled as an aid to Federal Register users. Inclusion or exclusion from this list has no legal significance.

RULES GOING INTO EFFECT NOVEMBER 6, 2002

ENVIRONMENTAL PROTECTION AGENCY

Air quality implementation plans; approval and promulgation; various States:

California; published 10-7-02

Pesticides; tolerances in food, animal feeds, and raw agricultural commodities:

Diflubenzuron; correction; published 11-6-02

FEDERAL ELECTION COMMISSION

Bipartisan Campaign Reform Act; implementation:

Contribution and expenditure; redefinition and regulations reorganization; published 8-5-02

Prohibited and excessive contributions; non-Federal or soft money; published 7-29-02

GENERAL SERVICES ADMINISTRATION

Federal Management Regulation:

Government aircraft; published 11-6-02

HEALTH AND HUMAN SERVICES DEPARTMENT

Food and Drug Administration

Animal drugs, feeds, and related products:

Sponsor name and address changes—

Fort Dodge Animal Health; published 11-6-02

Fort Dodge Animal Health; published 11-6-02

INTERIOR DEPARTMENT

Surface Mining Reclamation and Enforcement Office

Permanent program and abandoned mine land reclamation plan submissions:

Iowa; published 11-6-02

Kentucky; published 11-6-02

Pennsylvania; published 11-6-02

Texas; published 11-6-02

Utah; published 11-6-02

Wyoming; published 11-6-02

TRANSPORTATION DEPARTMENT

Federal Aviation Administration

Airworthiness directives:

Bell; published 10-2-02

Eurocopter France; published 10-2-02

TREASURY DEPARTMENT

Currency and foreign transactions; financial reporting and recordkeeping requirements:

USA PATRIOT Act; implementation—

Anti-money laundering programs for financial institutions; published 11-6-02

COMMENTS DUE NEXT WEEK

AGRICULTURE DEPARTMENT

Commodity Credit Corporation

Loan and purchase programs:

Crop insurance fraud; disqualification for benefits; comments due by 11-12-02; published 9-12-02 [FR 02-23234]

AGRICULTURE DEPARTMENT

Commodity Credit Corporation

Technical Assistance for Specialty Crops program; implementation; comments due by 11-12-02; published 9-10-02 [FR 02-23056]

AGRICULTURE DEPARTMENT

Federal Crop Insurance Corporation

Crop insurance regulations:

General administrative regulations, group risk plan of insurance regulations for 2003 and succeeding crop years, and common crop insurance regulations; comments due by 11-12-02; published 10-28-02 [FR 02-27367]

COMMERCE DEPARTMENT

Economic Analysis Bureau

International services surveys:

Foreign direct investments in U.S.—

BE-12; benchmark survey of foreign direct investment in U.S.; comments due by 11-12-02; published 9-12-02 [FR 02-23099]

COMMERCE DEPARTMENT

National Oceanic and Atmospheric Administration

Fishery conservation and management:

Alaska; fisheries of Exclusive Economic Zone—

Western Alaska Community Development Quota Program; halibut; comments due by 11-14-02; published 10-15-02 [FR 02-26136]

Magnuson-Stevens Act provisions—

Domestic fisheries; exempted fishing permit applications; comments due by 11-13-02; published 10-29-02 [FR 02-27511]

West Coast States and Western Pacific fisheries—

West Coast salmon; comments due by 11-12-02; published 10-28-02 [FR 02-27362]

West Coast salmon; comments due by 11-12-02; published 10-28-02 [FR 02-27361]

West Coast Salmon; comments due by 11-12-02; published 10-28-02 [FR 02-27359]

CONSUMER PRODUCT SAFETY COMMISSION

Flammable Fabrics Act:

Clothing textiles; flammability standard; risk of injury; comments due by 11-12-02; published 9-12-02 [FR 02-23273]

ENERGY DEPARTMENT

Federal Energy Regulatory Commission

Electric utilities (Federal Power Act):

Undue discrimination; remedying through open access transmission service and standard electricity market design

Conferences and comment period extended; comments due by 11-15-02; published 10-11-02 [FR 02-25736]

Technical conferences; comments due by 11-15-02; published 9-18-02 [FR 02-23694]

Practice and procedure:

Critical energy infrastructure information; public availability restriction; comments due by 11-14-02; published 10-22-02 [FR 02-26489]

ENVIRONMENTAL PROTECTION AGENCY

Air quality implementation plans; approval and promulgation; various States:

Arizona; comments due by 11-12-02; published 10-11-02 [FR 02-25856]

ENVIRONMENTAL PROTECTION AGENCY

Air quality implementation plans; approval and promulgation; various States:

Indiana; comments due by 11-12-02; published 10-11-02 [FR 02-25854]

ENVIRONMENTAL PROTECTION AGENCY

Air quality implementation plans; approval and promulgation; various States:

Indiana; comments due by 11-12-02; published 10-11-02 [FR 02-25855]

Massachusetts; comments due by 11-14-02; published 10-15-02 [FR 02-26173]

ENVIRONMENTAL PROTECTION AGENCY

Air quality implementation plans; approval and promulgation; various States:

West Virginia; comments due by 11-12-02; published 10-11-02 [FR 02-25852]

ENVIRONMENTAL PROTECTION AGENCY

Air quality implementation plans; approval and promulgation; various States:

West Virginia; comments due by 11-12-02; published 10-11-02 [FR 02-25853]

Solid wastes:

National Environmental Performance Track Program—

Hazardous waste generator facilities; reporting requirements; comments due by 11-12-02; published 8-13-02 [FR 02-20347]

FEDERAL COMMUNICATIONS COMMISSION

Digital television stations; table of assignments:

Georgia; comments due by 11-14-02; published 10-1-02 [FR 02-24898]

North Dakota; comments due by 11-14-02; published 10-1-02 [FR 02-24897]

Radio stations; table of assignments:

Various States; comments due by 11-12-02; published 10-16-02 [FR 02-26234]

Television stations; table of assignments:

Texas; comments due by 11-12-02; published 9-25-02 [FR 02-24355]

FEDERAL RESERVE SYSTEM

Credit by brokers and dealers (Regulation T):

Treatment of stock futures held by customers at security futures intermediary; comments due by 11-15-02; published 10-4-02 [FR 02-25227]

GENERAL ACCOUNTING OFFICE

Administrative practice and procedure:

Bid protest regulations; revision; comments due by 11-12-02; published 10-1-02 [FR 02-24803]

HEALTH AND HUMAN SERVICES DEPARTMENT

Food and Drug Administration

Medical devices:

Dental devices—

Dental sonography and jaw tracking devices; classification; comments due by 11-12-02; published 8-14-02 [FR 02-20499]

JUSTICE DEPARTMENT

Immigration and Naturalization Service

Immigration:

Visa waiver pilot program—

Passenger data elements; comments due by 11-12-02; published 10-11-02 [FR 02-26027]

LEGAL SERVICES CORPORATION

Outside practice of law by full-time legal services attorneys; comments due by 11-12-02; published 9-11-02 [FR 02-23089]

NUCLEAR REGULATORY COMMISSION

Source material; domestic licensing:

Transfers approval; comments due by 11-12-02; published 8-28-02 [FR 02-21887]

POSTAL SERVICE

Domestic Mail Manual:

Refunds of unused meter stamps and returned business reply mail mailpieces with postage affixed; administrative charges; comments due by 11-14-02; published 10-15-02 [FR 02-26161]

SMALL BUSINESS ADMINISTRATION

Freedom of Information Act; implementation; comments due by 11-12-02; published 9-11-02 [FR 02-22932]

TRANSPORTATION DEPARTMENT

Coast Guard

Drawbridge operations:

New Jersey; comments due by 11-12-02; published 9-12-02 [FR 02-23115]

Ports and waterways safety:

Lower Mississippi River, Greenville, MS; regulated navigation area; comments due by 11-12-02; published 9-13-02 [FR 02-23404]

Practice and procedure:

Territorial seas, navigable waters, and jurisdiction; definitions; comments due by 11-12-02; published 8-14-02 [FR 02-20481]

Correction; comments due by 11-12-02; published 9-18-02 [FR 02-23754]

TRANSPORTATION DEPARTMENT

Workplace drug and alcohol testing programs:

Drug and alcohol management information system reporting forms; comments due by 11-14-02; published 9-30-02 [FR 02-24718]

TRANSPORTATION DEPARTMENT

Federal Aviation Administration

Airworthiness directives:

Boeing; comments due by 11-12-02; published 9-25-02 [FR 02-24281]

McDonnell Douglas; comments due by 11-15-02; published 10-1-02 [FR 02-24689]

Pratt & Whitney; comments due by 11-12-02; published 9-13-02 [FR 02-23290]

Raytheon; comments due by 11-12-02; published 9-25-02 [FR 02-24308]

Robinson Helicopter Co.; comments due by 11-12-02; published 9-10-02 [FR 02-22898]

Airworthiness standards:

Special conditions—

Boeing Model 777-200 series airplanes; comments due by 11-12-02; published 10-11-02 [FR 02-25929]

Class E airspace; comments due by 11-12-02; published 9-27-02 [FR 02-24452]

Class E5 airspace; comments due by 11-15-02; published 10-16-02 [FR 02-26277]

TRANSPORTATION DEPARTMENT

Federal Motor Carrier Safety Administration

Hazardous materials:

Hazardous materials transportation—

Motor carriers transporting hazardous materials; security requirements; comments due by 11-15-02; published 10-8-02 [FR 02-25463]

TRANSPORTATION DEPARTMENT

Research and Special Programs Administration

Hazardous materials:

Hazardous materials transportation—

Motor carriers transporting hazardous materials; security requirements; comments due by 11-15-02; published 10-8-02 [FR 02-25463]

TREASURY DEPARTMENT

Internal Revenue Service

Income taxes:

Deposit interest paid to nonresident aliens; reporting guidance; comments due by 11-14-02; published 8-2-02 [FR 02-19348]

VETERANS AFFAIRS DEPARTMENT

Vocational rehabilitation and education:

Montgomery GI Bill-Active Duty program; accelerated payments; comments due by 11-12-02; published 9-11-02 [FR 02-22439]

LIST OF PUBLIC LAWS

This is a continuing list of public bills from the current session of Congress which have become Federal laws. It may be used in conjunction with "P L U S" (Public Laws Update Service) on 202–741–6043. This list is also available online at *http://www.nara.gov/fedreg/plawcurr.html*.

The text of laws is not published in the **Federal Register** but may be ordered in "slip law" (individual pamphlet) form from the Superintendent of Documents, U.S. Government Printing Office, Washington, DC 20402 (phone, 202–512–1808). The text will also be made available on the Internet from GPO Access at *http://www.access.gpo.gov/nara/nara005.html*. Some laws may not yet be available.

H.R. 2215/P.L. 107–273

21st Century Department of Justice Appropriations Authorization Act (Nov. 2, 2002; 116 Stat. 1758)

H.R. 4967/P.L. 107–274

Border Commuter Student Act of 2002 (Nov. 2, 2002; 116 Stat. 1923)

H.R. 5542/P.L. 107–275

Black Lung Consolidation of Administrative Responsibility Act (Nov. 2, 2002; 116 Stat. 1925)

H.R. 5596/P.L. 107–276

To amend section 527 of the Internal Revenue Code of 1986 to eliminate notification and return requirements for State and local party committees and candidate committees and avoid duplicate reporting by certain State and local political committees of information required to be reported and made publicly available under State law, and for other purposes. (Nov. 2, 2002; 116 Stat. 1929)

Last List November 1, 2002

Public Laws Electronic Notification Service (PENS)

PENS is a free electronic mail notification service of newly enacted public laws. To subscribe, go to *http://hydra.gsa.gov/archives/publaws-l.html* or send E-mail to **listserv@listserv.gsa.gov** with the following text message:

SUBSCRIBE PUBLAWS-L
Your Name.

Note: This service is strictly for E-mail notification of new laws. The text of laws is not available through this service. **PENS** cannot respond to specific inquiries sent to this address.