AUTHENTICATED
U.S. GOVERNMENT
INFORMATION
GPO

Federal Register

10–2–02 Wednesday
Vol. 67 No. 191 Oct. 2, 2002
Pages 61761–61974

The **FEDERAL REGISTER** is published daily, Monday through Friday, except official holidays, by the Office of the Federal Register, National Archives and Records Administration, Washington, DC 20408, under the Federal Register Act (44 U.S.C. Ch. 15) and the regulations of the Administrative Committee of the Federal Register (1 CFR Ch. I). The Superintendent of Documents, U.S. Government Printing Office, Washington, DC 20402 is the exclusive distributor of the official edition.

The **Federal Register** provides a uniform system for making available to the public regulations and legal notices issued by Federal agencies. These include Presidential proclamations and Executive Orders, Federal agency documents having general applicability and legal effect, documents required to be published by act of Congress, and other Federal agency documents of public interest.

Documents are on file for public inspection in the Office of the Federal Register the day before they are published, unless the issuing agency requests earlier filing. For a list of documents currently on file for public inspection, see http://www.nara.gov/fedreg.

The seal of the National Archives and Records Administration authenticates the Federal Register as the official serial publication established under the Federal Register Act. Under 44 U.S.C. 1507, the contents of the **Federal Register** shall be judicially noticed.

The **Federal Register** is published in paper and on 24x microfiche. It is also available online at no charge as one of the databases on GPO Access, a service of the U.S. Government Printing Office.

The online edition of the **Federal Register** is issued under the authority of the Administrative Committee of the Federal Register as the official legal equivalent of the paper and microfiche editions (44 U.S.C. 4101 and 1 CFR 5.10). It is updated by 6 a.m. each day the **Federal Register** is published and it includes both text and graphics from Volume 59, Number 1 (January 2, 1994) forward.

GPO Access users can choose to retrieve online **Federal Register** documents as TEXT (ASCII text, graphics omitted), PDF (Adobe Portable Document Format, including full text and all graphics), or SUMMARY (abbreviated text) files. Users should carefully check retrieved material to ensure that documents were properly downloaded.

On the World Wide Web, connect to the **Federal Register** at http://www.access.gpo.gov/nara. Those without World Wide Web access can also connect with a local WAIS client, by Telnet to swais.access.gpo.gov, or by dialing (202) 512–1661 with a computer and modem. When using Telnet or modem, type swais, then log in as guest with no password.

For more information about GPO Access, contact the GPO Access User Support Team by E-mail at gpoaccess@gpo.gov; by fax at (202) 512–1262; or call (202) 512–1530 or 1–888–293–6498 (toll free) between 7 a.m. and 5 p.m. Eastern time, Monday–Friday, except Federal holidays.

The annual subscription price for the **Federal Register** paper edition is $699, or $764 for a combined **Federal Register, Federal Register** Index and List of CFR Sections Affected (LSA) subscription; the microfiche edition of the **Federal Register** including the **Federal Register** Index and LSA is $264. Six month subscriptions are available for one-half the annual rate. The charge for individual copies in paper form is $10.00 for each issue, or $10.00 for each group of pages as actually bound; or $2.00 for each issue in microfiche form. All prices include regular domestic postage and handling. International customers please add 25% for foreign handling. Remit check or money order, made payable to the Superintendent of Documents, or charge to your GPO Deposit Account, VISA, MasterCard or Discover. Mail to: New Orders, Superintendent of Documents, P.O. Box 371954, Pittsburgh, PA 15250–7954.

There are no restrictions on the republication of material appearing in the **Federal Register.**

How To Cite This Publication: Use the volume number and the page number. Example: 67 FR 12345.

SUBSCRIPTIONS AND COPIES

PUBLIC

Subscriptions:

Paper or fiche	**202–512–1800**
Assistance with public subscriptions	**202–512–1806**

General online information **202–512–1530; 1–888–293–6498**

Single copies/back copies:

Paper or fiche	**202–512–1800**
Assistance with public single copies	**1–866–512–1800 (Toll-Free)**

FEDERAL AGENCIES

Subscriptions:

Paper or fiche	**202–741–6005**
Assistance with Federal agency subscriptions	**202–741–6005**

What's NEW!

Federal Register Table of Contents via e-mail

Subscribe to FEDREGTOC, to receive the **Federal Register** Table of Contents in your e-mail every day.

If you get the HTML version, you can click directly to any document in the issue.

To subscribe, go to **http://listserv.access.gpo.gov** and select:

Online mailing list archives
FEDREGTOC-L
Join or leave the list

Then follow the instructions.

Printed on recycled paper.

Contents

Federal Register

Vol. 67, No. 191

Wednesday, October 2, 2002

Agricultural Marketing Service
RULES
Beef promotion and research, 61762–61767

Agriculture Department
See Agricultural Marketing Service
See Food Safety and Inspection Service
See Forest Service
See Natural Resources Conservation Service

Arts and Humanities, National Foundation
See National Foundation on the Arts and the Humanities

Broadcasting Board of Governors
NOTICES
Meetings; Sunshine Act, 61848–61849

Centers for Disease Control and Prevention
NOTICES
Grant and cooperative agreement awards:
Association of Immunization Managers, 61889

Centers for Medicare & Medicaid Services
RULES
Medicare and medicaid:
Hospital participation conditions; patients' rights; regulatory flexibility analysis clarification, 61805–61808
Hospitals, long-term care facilities, and home health agencies; immunization standards; participation conditions, 61808–61814
State Children's Health Insurance Programs:
Allotments and grants to States—
Prenatal care and other health services for unborn children; eligibility, 61955–61974

Children and Families Administration
NOTICES
Agency information collection activities:
Proposed collection; comment request, 61889–61891

Commerce Department
See Foreign-Trade Zones Board
See International Trade Administration
See National Oceanic and Atmospheric Administration

Committee for the Implementation of Textile Agreements
NOTICES
Cotton, wool, and man-made textiles:
Bangladesh, 61851
Thailand, 61851–61852

Comptroller of the Currency
NOTICES
Agency information collection activities:
Submission for OMB review; comment request, 61953–61954

Education Department
NOTICES
Agency information collection activities:
Proposed collection; comment request, 61852–61853
Submission for OMB review; comment request, 61853

Energy Department
See Federal Energy Regulatory Commission
NOTICES
Meetings:
Advanced Scientific Computing Advisory Committee, 61853–61854

Environmental Protection Agency
RULES
Air quality implementation plans; approval and promulgation; various States; air quality planning purposes; designation of areas:
Louisiana, 61786–61802
Air quality implementation plans; approval and promulgation; various States:
California, 61784–61786
Superfund programs:
National oil and hazardous substances contingency plan—
National priorities list update, 61802–61805
PROPOSED RULES
Superfund program:
National oil and hazardous substances contingency plan—
National priorities list update, 61844–61845
NOTICES
Agency information collection activities:
Submission for OMB review; comment request, 61878–61881

Federal Aviation Administration
RULES
Airworthiness directives:
Bell, 61771–61773
Eurocopter France, 61770–61771
PROPOSED RULES
Airworthiness directives:
Eurocopter France, 61843–61844
Marathon Power Technologies Co.; withdrawn, 61842–61843
Airworthiness standards:
Transport category airplanes—
Trim systems and protective breathing equipment, 61836–61842
NOTICES
Advisory circulars; availability, etc.:
Transport category airplanes—
Powerplant and auxiliary power unit installations; continued airworthiness assessments, 61947–61948
Exemption petitions; summary and disposition, 61948–61949
Meetings:
Aviation Weather Technology Transfer Board; new weather products; user input, 61949–61950
Technical standard orders:
Universal Access Transceiver Equipment, 61950

Federal Communications Commission
RULES
Common carrier services:
Satellite communications—
Mobile and and portable earth stations in 1610-1660.5 MHz band; emissions limits, 61814–61816
Television broadcasting:
Digital television—
Conversion rules and policies; petition denied, 61816–61818
PROPOSED RULES
Radio stations; table of assignments:
Oregon; correction, 61845
NOTICES
Common carrier services:
Federal-State Joint Board on Universal Service—
Schools and libraries universal service support mechanism; revised forms 486 and 479 and accompanying instructions; certification changes, 61881
In-region interLATA services—
Verizon New England Inc. et al.; application to provide service in New Hampshire and Delaware, 61881–61883

Federal Deposit Insurance Corporation
NOTICES
Agency information collection activities:
Submission for OMB review; comment request, 61953–61954

Federal Election Commission
NOTICES
Meetings; Sunshine Act, 61883

Federal Energy Regulatory Commission
NOTICES
Environmental statements; availability, etc.:
Goat Lake Hydroelectric Inc., 61861
Pacific Gas & Electric Co., 61861–61862
Environmental statements; notice of intent:
Public Utility District No. 1 of Pend Oreille County, WA, 61862
Hydroelectric applications, 61862–61877
Meetings:
Standard market design; data and software standards, 61877–61878
Preliminary permits surrender:
Western Land Investments, Inc., 61861
Applications, hearings, determinations, etc.:
Algonquin Gas Transmission Co., 61854
Algonquin LNG, Inc., 61854
Canyon Creek Compression Co., 61855
Eastern Shore Natural Gas Co., 61855
East Tennessee Natural Gas Co., 61855
Egan Hub Partners, L.P., 61855–61856
El Dorado Irrigation District, 61856
Enbridge Pipelines (KPC), 61856–61857
Maritimes & Northeast Pipeline, L.L.C., 61857
Natural Gas Pipeline Co. of America, 61857
Overthrust Pipeline Co., 61857–61858
SFPP, L.P., 61858–61859
Sithe New England Holdings, LLC et al., 61859
Southwestern Power Administration, 61859–61860
Texas Eastern Transmission, LP, 61860
TransColorado Gas Transmission Co., 61860–61861
Wyoming Interstate Co., Ltd., 61861

Federal Maritime Commission
NOTICES
Agreements filed, etc., 61883–61884
Ocean transportation intermediary licenses:
Air/Sea Forwarding Specialists, Inc., et al., 61884
Intermar et al., 61884–61885
Penasa Logistics (USA), Inc., et al., 61885

Federal Motor Carrier Safety Administration
RULES
Motor carrier safety regulations:
Technical amendments, 61818–61824

Federal Reserve System
RULES
Truth in lending (Regulation Z):
Disclosure requirements; staff commentary, 61769
NOTICES
Agency information collection activities:
Proposed collection; comment request, 61885–61886
Banks and bank holding companies:
Change in bank control, 61886–61887
Meetings:
Consumer Advisory Council, 61887

Federal Transit Administration
NOTICES
Transfer of federally assisted land or facility:
Honolulu, HI; former bus terminus facility transfer to Honolulu Department of Facility Maintenance, 61950–61951

Fish and Wildlife Service
PROPOSED RULES
Endangered and threatened species:
Critical habitat designations—
Plant species from Maui and Kahoolawe, HI; economic analysis, 61845–61846

Food and Drug Administration
RULES
Food additives:
Secondary direct food additives—
Peroxyacetic acid, etc., 61783–61784
Food for human consumption:
Food labeling—
Soluble dietary fiber and coronary heart disease; health claims, 61773–61783
NOTICES
Agency information collection activities:
Proposed collection; comment request, 61891–61892
Reports and guidance documents; availability, etc.:
FDA Modernization Act of 1997—
Recognized Standards List modifications (Recognition List Number: 007), 61892–61910
Pharmaceutical excipients, development; nonclinical studies, 61910–61911

Food Safety and Inspection Service
RULES
Meat and poultry inspection:
Federal Meat Inspection and Poultry Products Inspection Acts; State designations—
Maine; termination, 61767–61769
NOTICES
Meetings:
Codex Alimentarius Commission—
Food Import and Export Inspection and Certification Systems Codex Committee, 61847–61848

Foreign-Trade Zones Board
NOTICES
Applications, hearings, determinations, etc.:
New York
Bulova Corp., watch and clock products and parts warehousing and distribution facilities, 61849

Forest Service
NOTICES
Meetings:
Land Between the Lakes Advisory Board, 61848

Government Ethics Office
RULES
Executive Branch regulations:
Financial disclosure and standards of ethical conduct; technical amendments, 61761–61762

Health and Human Services Department
See Centers for Disease Control and Prevention
See Centers for Medicare & Medicaid Services
See Children and Families Administration
See Food and Drug Administration
See National Institutes of Health
NOTICES
Grants and cooperative agreements; availability, etc.:
Ricky Ray Hemophilia Relief Fund Program; petitions augmentation and fund termination date, 61887–61888
Scientific misconduct findings; administrative actions:
Muenchen, Heather J., Ph.D., 61888–61889

Housing and Urban Development Department
NOTICES
Agency information collection activities:
Submission for OMB review; comment request, 61915–61917
Grants and cooperative agreements; availability, etc.:
Facilities to assist homeless—
Excess and surplus Federal property, 61917

Immigration and Naturalization Service
NOTICES
Agency information collection activities:
Proposed collection; comment request, 61923–61924
Submission for OMB review; comment request, 61924–61925

Indian Affairs Bureau
NOTICES
Environmental statements; notice of intent:
Cordova, AK; Shepard Point Oil Spill Response Facility and Access Road; construction, 61917–61918

Interior Department
See Fish and Wildlife Service
See Indian Affairs Bureau
See Land Management Bureau
See Minerals Management Service

International Trade Administration
NOTICES
Antidumping and countervailing duties:
Administrative review requests, 61849–61850

International Trade Commission
NOTICES
Reports and guidance documents; availability, etc.:
Information disseminated by Federal agencies; quality, objectivity, utility, and integrity guidelines, 61922

Justice Department
See Immigration and Naturalization Service
NOTICES
Agency information collection activities:
Proposed collection; comment request, 61922–61923

Labor Department
See Pension and Welfare Benefits Administration

Land Management Bureau
NOTICES
Alaska Native claims selection:
Far West, Inc., 61918
Realty actions; sales, leases, etc.:
California, 61918–61919
Withdrawal and reservation of lands:
Nevada, 61919
Utah, 61920

Minerals Management Service
NOTICES
Environmental statements; availability, etc.:
Gulf of Mexico OCS—
Oil and gas operations, 61920–61922

National Archives and Records Administration
NOTICES
Agency records schedules; availability, 61925–61927

National Foundation on the Arts and the Humanities
NOTICES
Reports and guidance documents; availability, etc.:
Information disseminated by Federal agencies; quality, objectivity, utility, and integrity guidelines, 61927

National Institutes of Health
NOTICES
Agency information collection activities:
Submission for OMB review; comment request, 61911–61913
Meetings:
National Cancer Institute, 61913
National Institute of Allergy and Infectious Diseases, 61915
National Institute of Dental and Craniofacial Research, 61913–61915
National Institute on Drug Abuse, 61914

National Labor Relations Board
NOTICES
Reports and guidance documents; availability, etc.:
Information disseminated by Federal agencies; quality, objectivity, utility, and integrity guidelines, 61927–61928

National Oceanic and Atmospheric Administration
RULES
Fishery, conservation and management:
Alaska; fisheries of Exclusive Economic Zone—
Atka mackerel, 61827–61828
Pacific cod, 61826–61827
Pollock, 61826

West Coast States and Western Pacific fisheries—
Pacific Coast groundfish, 61824–61826
NOTICES
Meetings:
Pacific Fishery Management Council, 61850
Permits:
Marine mammals, 61850–61851

Natural Resources Conservation Service
NOTICES
Conservation Practices National Handbook:
Conservation practice standards, new or revised; comment request, 61848

Nuclear Regulatory Commission
NOTICES
Agency information collection activities:
Submission for OMB review; comment request, 61928
Environmental statements; availability, etc.:
Arizona Public Service Co., 61928–61929
BWX Technologies, Inc., 61929–61931
Meetings:
License renewal continuing guidance development; workshop, 61931–61932
Reports and guidance documents; availability, etc.:
Louisiana Energy Services gas centrifuge uranium enrichment facility, Hartsville, TN; white papers; comment request, 61932–61933

Pension and Welfare Benefits Administration
NOTICES
Meetings:
Employee Welfare and Pension Benefit Plans Advisory Council, 61925

Public Health Service
See Centers for Disease Control and Prevention
See Food and Drug Administration
See National Institutes of Health

Railroad Retirement Board
NOTICES
Agency information collection activities:
Submission for OMB review; comment request, 61933

Research and Special Programs Administration
NOTICES
Agency information collection activities:
Proposed collection; comment request, 61951–61952

Securities and Exchange Commission
NOTICES
Investment Company Act of 1940:
Deregistration applications—
ABN AMRO Funds et al., 61933–61934
Self-regulatory organizations; proposed rule changes:
Chicago Board Options Exchange, Inc., 61934–61940
Chicago Stock Exchange, Inc., 61940–61943
Options Clearing Corp., 61943–61944
Philadelphia Stock Exchange, Inc., 61944–61946

Small Business Administration
PROPOSED RULES
Small business size standards:
Tour operators, 61829–61836
NOTICES
Disaster loan areas:
Indiana, 61946

Special Counsel Office
NOTICES
Reports and guidance documents; availability, etc.:
Information disseminated by Federal agencies; quality, objectivity, utility, and integrity guidelines, 61946–61947

Surface Transportation Board
NOTICES
Railroad operation, acquisition, construction, etc.:
Monongahela Connecting Railroad Co., 61952

Textile Agreements Implementation Committee
See Committee for the Implementation of Textile Agreements

Thrift Supervision Office
NOTICES
Agency information collection activities:
Submission for OMB review; comment request, 61953–61954

Transportation Department
See Federal Aviation Administration
See Federal Motor Carrier Safety Administration
See Federal Transit Administration
See Research and Special Programs Administration
See Surface Transportation Board

Treasury Department
See Comptroller of the Currency
See Thrift Supervision Office
NOTICES
Agency information collection activities:
Submission for OMB review; comment request, 61952–61953

Veterans Employment and Training Service
NOTICES
Meetings:
Veterans Employment and Training Advisory Committee, 61954

Separate Parts In This Issue

Part II
Health and Human Services Department, Centers for Medicare & Medicaid Services, 61955–61974

Reader Aids
Consult the Reader Aids section at the end of this issue for phone numbers, online resources, finding aids, reminders, and notice of recently enacted public laws.

To subscribe to the Federal Register Table of Contents LISTSERV electronic mailing list, go to http://listserv.access.gpo.gov and select Online mailing list archives, FEDREGTOC-L, Join or leave the list (or change settings); then follow the instructions.

CFR PARTS AFFECTED IN THIS ISSUE

A cumulative list of the parts affected this month can be found in the Reader Aids section at the end of this issue.

5 CFR
2634 61761
2635 61761

7 CFR
1260 61762

9 CFR
331 61767
381 61767

12 CFR
226 61769

13 CFR
Proposed Rules:
121 61829

14 CFR
39 (2 documents) 61770, 61771
Proposed Rules:
25 61836
39 (2 documents) 61842, 61843

21 CFR
101 61773
173 61783

40 CFR
52 (2 documents) 61784, 61786
81 61786
300 61802
Proposed Rules:
300 61844

42 CFR
457 61956
482 (2 documents) 61805, 61808
483 61808
484 61808

47 CFR
25 61814
73 61816
Proposed Rules:
73 61845

49 CFR
350 61818
360 61818
365 61818
372 61818
382 61818
383 61818
386 61818
387 61818
388 61818
390 61818
391 61818
393 61818

50 CFR
600 61824
660 61824
679 (3 documents) 61826, 61827
Proposed Rules:
17 61845

Rules and Regulations

Federal Register

Vol. 67, No. 191

Wednesday, October 2, 2002

This section of the FEDERAL REGISTER contains regulatory documents having general applicability and legal effect, most of which are keyed to and codified in the Code of Federal Regulations, which is published under 50 titles pursuant to 44 U.S.C. 1510.

The Code of Federal Regulations is sold by the Superintendent of Documents. Prices of new books are listed in the first FEDERAL REGISTER issue of each week.

OFFICE OF GOVERNMENT ETHICS

5 CFR Parts 2634 and 2635

RINs 3209–AA00 and 3209–AA04

Technical Updating Amendments to Executive Branch Financial Disclosure and Standards of Ethical Conduct Regulations

AGENCY: Office of Government Ethics (OGE).

ACTION: Final rule; technical amendments.

SUMMARY: The Office of Government Ethics is updating its executive branch regulation on financial disclosure to reflect the retroactive statutory increase of the reporting thresholds for gifts and travel reimbursements. In addition, OGE is similarly raising the widely attended gatherings nonsponsor gifts exception dollar ceiling under the executive branchwide standards of ethical conduct regulation.

DATES: The amendments to 5 CFR 2634.304 are retroactively effective to January 1, 2002, and the amendments to 5 CFR 2635.204 are effective October 2, 2002.

FOR FURTHER INFORMATION CONTACT: William E. Gressman, Senior Associate General Counsel, Office of Government Ethics, telephone: 202–208–8000, ext. 1110; TDD: 202–208–8025; FAX: 202–208–8037.

SUPPLEMENTARY INFORMATION: The Office of Government Ethics is amending pertinent sections of its executive branchwide ethics regulations on financial disclosure and standards of ethical conduct (the Standards), as codified at 5 CFR parts 2634 and 2635, in order to update them.

Increased Gifts and Travel Reimbursements Reporting Thresholds

First, OGE is retroactively increasing, to January 1, 2002, the reporting thresholds for gifts, reimbursements and travel expenses in the OGE executive branchwide regulation at 5 CFR 2634.304 (and as illustrated in the four examples following paragraph (d) of that section) for both the public and confidential financial disclosure systems under section 102(a)(2)(A) & (B) of the Ethics in Government Act as amended, 5 U.S.C. app. § 102(a)(2)(A) & (B), as extended to the executive branch confidential reporting system by 5 CFR 2634.907(a)(3). The new reporting thresholds for gifts and travel reimbursements being retroactively incorporated in OGE's financial disclosure regulation are ''more than $285'' for the aggregation threshold for reporting and ''$114 or less'' for the de minimis exception for gifts and reimbursements which do not have to be counted towards the aggregate threshold (from the prior levels of more than $260 aggregate and $104 or less de minimis exception, respectively).

These increases are brought about by a recent General Services Administration (GSA) rulemaking raising ''minimal value'' under the Foreign Gifts and Decorations Act, 5 U.S.C. 7342, to ''$285 or less'' (from the prior level of $260 or less) for the three-year period 2002–2004, since the Ethics Act and OGE regulatory gifts/travel reimbursements reporting thresholds are tied to any such increase in foreign gifts minimal value over $250. *See* GSA's rulemaking as published at 67 FR 56495–56496 (September 4, 2002), revising retroactively to January 1, 2002 the foreign gifts minimal value definition as codified at 41 CFR 102–42.10.

The Office of Government Ethics will continue to adjust the gifts and travel reimbursements reporting thresholds in the future as needed in light of GSA's redefinition of ''minimal value'' every three years for foreign gifts purposes. See OGE's previous retroactive adjustment of those reporting thresholds as published at 65 FR 69655–69657 (November 20, 2000) that was based on GSA's prior redefinition for the period 1999–2001.

Moreover, OGE is also clarifying a couple of cross-references in examples 2 and 3 following paragraph (d) of § 2634.304.

Increased Dollar Ceiling for the Exception for Nonsponsor Gifts of Free Attendance at Widely Attended Gatherings

In addition, OGE is increasing from $260 to $285 the exception ceiling for nonsponsor gifts of free attendance at widely attended gatherings under the standards of ethical conduct regulation, as codified at 5 CFR 2635.204(g)(2) (and as illustrated in several examples following paragraph (g)). This separate regulatory change is effective upon publication in the **Federal Register**, on October 2, 2002. As OGE noted in the preambles to the proposed and final rules on such nonsponsor gifts, that ceiling is based in part on the financial disclosure gifts reporting threshold. *See* 60 FR 31416 (June 15, 1995) and 61 FR 42968 (August 20, 1996). The nonsponsor gift ceiling was last raised in the November 2000 OGE rulemaking noted in the preceding paragraph above. Thus, it is reasonable now to again increase the nonsponsor gift ceiling to match the further increase in the gifts/travel reimbursements reporting thresholds. The other requirements for acceptance of such nonsponsor gifts, including an agency interest determination and expected attendance by more than 100 persons, remain unchanged.

Matters of Regulatory Procedure

Administrative Procedure Act

Pursuant to 5 U.S.C. 553(b) and (d), as Director of the Office of Government Ethics, I find good cause exists for waiving the general notice of proposed rulemaking, opportunity for public comment and 30-day delay in effectiveness as to these technical updates and the correction. The notice, comment and delayed effective date provisions are being waived in part because these technical amendments concern matters of agency organization, practice and procedure. Further, it is in the public interest that correct and up-to-date information be contained in the affected sections of OGE's regulations as soon as possible. The increase in the reporting thresholds for gifts and reimbursements is based on a statutory formula and also lessens the reporting burden somewhat, and thus the effective date of that regulatory revision is being made retroactively effective to January

1, 2002, when the change became effective under the Ethics Act.

Executive Order 12866

In promulgating these technical amendments, OGE has adhered to the regulatory philosophy and the applicable principles of regulation set forth in section 1 of Executive Order 12866, Regulatory Planning and Review. These amendments have not been reviewed by the Office of Management and Budget under that Executive order, since they are not deemed ''significant'' thereunder.

Executive Order 12988

As Director of the Office of Government Ethics, I have reviewed this final amendatory regulation in light of section 3 of Executive Order 12988, Civil Justice Reform, and certify that it meets the applicable standards provided therein.

Regulatory Flexibility Act

As Director of the Office of Government Ethics, I certify under the Regulatory Flexibility Act (5 U.S.C. chapter 6) that this rulemaking will not have a significant economic impact on a substantial number of small entities.

Paperwork Reduction Act

The Paperwork Reduction Act (44 U.S.C. chapter 35) does not apply because this amendatory rulemaking does not contain information collection requirements that require the approval of the Office of Management and Budget.

Congressional Review Act

The Office of Government Ethics has determined that this amendatory rulemaking is a nonmajor rule under the Congressional Review Act (5 U.S.C. chapter 8) and has submitted a report thereon to the United States Senate, House of Representatives and General Accounting Office in accordance with that law.

List of Subjects

5 CFR Part 2634

Certificates of divestiture, Conflict of interests, Financial disclosure, Government employees, Penalties, Privacy, Reporting and recordkeeping requirements, Trusts and trustees.

5 CFR Part 2635

Conflict of interests, Executive branch standards of ethical conduct, Government employees.

Approved: September 25, 2002.

Amy L. Comstock,

Director, Office of Government Ethics.

For the reasons set forth in the preamble, the Office of Government Ethics is amending 5 CFR parts 2634 and 2635 as follows:

PART 2634—EXECUTIVE BRANCH FINANCIAL DISCLOSURE, QUALIFIED TRUSTS, AND CERTIFICATES OF DIVESTITURE

1. The authority citation for part 2634 continues to read as follows:

Authority: 5 U.S.C. App. (Ethics in Government Act of 1978); 26 U.S.C. 1043; Pub. L. 101–410, 104 Stat. 890, 28 U.S.C. 2461 note (Federal Civil Penalties Inflation Adjustment Act of 1990), as amended by Sec. 31001, Pub. L. 104–134, 110 Stat. 1321 (Debt Collection Improvement Act of 1996); E.O. 12674, 54 FR 15159, 3 CFR, 1989 Comp., p. 215, as modified by E.O. 12731, 55 FR 42547, 3 CFR, 1990 Comp., p. 306.

2. Section 2634.304 is amended by:

a. Removing the dollar amount ''$260'' in paragraphs (a) and (b) and in example 1 following paragraph (d) and adding in its place in each instance the dollar amount ''$285'';

b. Removing the dollar amount ''$104'' in paragraph (d) and in examples 1 and 2 following paragraph (d) and adding in its place in each instance the dollar amount ''$114'';

c. Removing the dollar amount ''$105'' in example 1 following paragraph (d) and adding in its place the dollar amount ''$145'';

d. Removing the word ''exception'' and the regulatory citation ''§ 2634.105(h)'' in examples 2 and 3 following paragraph (d) and adding in their place in each instance, respectively, the word ''exclusion'' and the regulatory citation ''§ 2634.105(h)(4)''; and

e. Removing the dollar amount ''$260'' in examples 3 and 4 following paragraph (d) and adding in its place the dollar amount ''$285''.

PART 2635—STANDARDS OF ETHICAL CONDUCT FOR EMPLOYEES OF THE EXECUTIVE BRANCH

3. The authority citation for part 2635 continues to read as follows:

Authority: 5 U.S.C. 7301, 7351, 7353; 5 U.S.C. App. (Ethics in Government Act of 1978); E.O. 12674, 54 FR 15159, 3 CFR, 1989 Comp., p. 215, as modified by E.O. 12731, 55 FR 42547, 3 CFR, 1990 Comp., p. 306.

4. Section 2635.204 is amended by:

a. Removing the dollar amount ''$260'' in paragraph (g)(2) and in examples 1 and 2 (in the latter of which it appears twice) following paragraph (g)(6) and adding in its place in each instance the dollar amount ''$285''; and

b. Removing the dollar amount ''$520'' in example 2 following paragraph (g)(6) and adding in its place the dollar amount ''$570''.

[FR Doc. 02–24961 Filed 10–1–02; 8:45 am]

BILLING CODE 6345–01–P

DEPARTMENT OF AGRICULTURE

Agricultural Marketing Service

7 CFR Part 1260

[No. LS–99–20]

Amendment to the Beef Promotion and Research Rules and Regulations

AGENCY: Agricultural Marketing Service, USDA.

ACTION: Final rule.

SUMMARY: This final rule amends the Beef Promotion and Research Rules and Regulations (Rules and Regulations) established under the Beef Promotion and Research Act of 1985 (Act) by providing producers the opportunity to voluntarily pay the $1-per-head assessment to the Qualified State Beef Council (QSBC) located in the producer's State of residence prior to sale, subject to certain conditions. In addition, the chart which establishes the party responsible for collecting and remitting assessments in brand inspected States to the QSBC or the Cattlemen's Beef Promotion and Research Board (Board) is updated to reflect the changes the cattle industry has incurred since the inception of the program.

EFFECTIVE DATE: October 1, 2002.

FOR FURTHER INFORMATION CONTACT: Kenneth R. Payne, Chief; Marketing Programs Branch, Room 2638–S; Livestock and Seed Program; Agricultural Marketing Service (AMS), USDA; STOP 0251; 1400 Independence Avenue, SW.; Washington, DC 20250–0251; telephone 202/720–1115.

SUPPLEMENTARY INFORMATION: Prior document in this proceeding: Proposed Rule—Beef Promotion and Research Program: Amendment to Beef Promotion and Research Rules and Regulations published October 19, 2001 (66 FR 53127), with a 60 day comment period. The comment period ended December 18, 2001.

Executive Order 12866

The Office of Management and Budget (OMB) has waived the review process required by Executive Order 12866 for this action.

Executive Order 12988

This final rule has been reviewed under Executive Order 12988, Civil Justice Reform. This rule is not intended to have a retroactive effect. Section 11 of the Act provides that nothing in the Act may be construed to preempt or supersede any other program relating to beef promotion organized and operated under the laws of the United States or any State. There are no administrative proceedings that must be exhausted prior to any judicial challenge of the provisions of this rule.

Regulatory Flexibility Act

Pursuant to requirements set forth in the Regulatory Flexibility Act (RFA) (5 U.S.C. 601 *et seq.*), the Administrator of AMS has considered the economic effect of this action on small entities and has determined that this rule will not have a significant economic impact on a substantial number of small business entities. The purpose of RFA is to fit regulatory actions to the scale of businesses subject to such actions in order that small businesses will not be unduly burdened.

The Department of Agriculture's (Department) National Agricultural Statistics Service estimates that in calendar year 2000 the number of cattle operations in the United States totaled approximately 1.1 million, including feedlot operations. There are also 45 QSBCs in the United States. In addition, there are 11 States with brand inspectors. The majority of these operations are considered small businesses under the criteria established by the Small Business Administration.

This final rule imposes no significant burden on the industry as it merely gives producers the opportunity to voluntarily pay the $1-per-head assessment on cattle of their own production prior to sale and to remit the assessments to the QSBC located in the producers State of residence.

The impact on QSBCs will be a redistribution of an estimated maximum of one-half million dollars of the $40 million currently retained annually in total by the 45 QSBCs. The Department estimates that up to 6 million head or 20 percent of the approximately 30 million head of steers and heifers slaughtered annually are sold for slaughter under retained ownership. The Department also estimates that assessments on up to one-sixth of the cattle (1 million head) will be paid in advance to QSBCs. If the $1 assessment were paid in advance to QSBCs on these cattle, the QSBCs' 50 percent share of up to $1 million in assessments or as much as $500,000 will be redistributed among the QSBCs.

The major cattle feeding States of Texas, Nebraska, Kansas, Colorado, and Oklahoma could reasonably be expected to account for up to 80 percent of the $500,000 in reduced revenue to QSBCs annually. These States collect an average of $19 million annually and retain one-half that amount or $9.5 million. Assuming that the revenue to each of these five States available for State directed programs was reduced by an average of $80,000, it would represent about a 1 percent decrease in the average revenue available for State directed programs in these States.

The remaining 40 QSBCs have annual State budgets that average about $500,000. An estimated net increase in annual income for these States, as a result of the advance payment of assessments, could average up to $10,000 per State representing a 2 percent increase.

Producers wishing to direct payment of assessments to the QSBC in the producers' State of residence when cattle are sent to another State for feeding under retained ownership, would complete a form that would be provided to affected parties including the QSBC, the feedlot, and the packer or the collecting person.

Copies of the completed ''Certification of Producer Directed Payment of Cattle Assessments'' form shall be maintained on file by the producer, the QSBC, the feedlot operator, and the purchaser of the cattle for 3 years.

We estimate the average cost of the reporting burden per respondent would be $16 annually.

We estimate the total average cost of the recordkeeping burden per recordkeeper would be $8 annually.

The Administrator of AMS has considered the economic effect of this action on small entities and has determined that this final rule will not have a significant economic impact on a substantial number of small entities.

The proposed rule that was published in the **Federal Register** on October 19, 2001 (66 FR 53127), invited interested persons to submit comments to the Department concerning potential effects. No comments were received regarding the RFA.

Paperwork Reduction Act

In accordance with OMB regulations (5 CFR Part 1320) which implement the Paperwork Reduction Act of 1995 (44 U.S.C. Chapter 35), the information collection and recordkeeping requirements contained in this rule have been approved by OMB under OMB control number 0581–0202.

Title: Certification of Producer Directed Payment of Assessments.

OMB Number: 0581–0202

Expiration Date of Approval: March 1, 2005.

Type of Request: Approval of new information collection.

Abstract: The Act provides for a program of promotion, research, consumer information, and industry information funded by assessments paid by beef producers each time cattle are sold and by importers of cattle and beef products upon importation.

Assessments on imported cattle and beef products are collected by the U.S. Customs Service at the rate of $1 per head or the live animal equivalent of beef and beef products. An assessment of $1 per head is due from the producer each time a producer sells cattle in the United States. The assessment is to be collected by the purchaser or other ''collecting person'' as provided in the rules and regulations published in the **Federal Register** on February 26, 1988 (53 FR 5749). The producer assessments are then remitted to QSBCs in 45 States and to the Board in the remaining States. QSBCs retain up to one-half of the $1 assessment for use in State directed programs and forward the other half to the Board. Currently, QSBCs in the traditional cattle feeding States (*e.g.*, Texas, Kansas, Nebraska, Oklahoma, and Colorado) collect and retain assessments on cattle sold that are owned by producers residing in other States. This benefits QSBCs in the States that have large numbers of cattle in feedlots owned by producers residing in other States. Some producers retain ownership of cattle and transport them to one of the cattle feeding States. To provide producers with more flexibility and to provide the opportunity for a more equitable distribution of assessment funds to States based on cattle ownership, the final ''Certification of Producer Directed Payment of Cattle Assessments'' form would be made available for use by producers who want the QSBC located in their States of residence to receive assessment funds rather than the QSBC in the State where the cattle are fed.

1. Certification of Producer Directed Payment of Assessments.

Estimate of Burden: The public reporting burden for this collection of information is estimated to average .20 hour per response.

Respondents: Producers wishing to direct payment of assessments to the QSBC in the producers' State of residence when cattle are sent to another State for feeding under retained ownership would use the form.

Estimated Number of Respondents: 1,000.

Estimated Number of Responses per Respondent: 4.

Estimated Total Annual Burden on Respondents: 800 hours.

Total cost: $16,000.

2. *Maintenance of records:* 3 years.

Estimate of Burden: The public recordkeeping burden for keeping this document is estimated to average .10 hour per recordkeeper.

Recordkeepers: Producers, QSBCs, feedlot operators, and purchasers.

Estimated Number of Recordkeepers: 1,260.

Estimated Total Recordkeeping Hours: 504 hours.

Estimated Total Cost: $10,080.

The total average cost of the estimated annual reporting burden per respondent would be: $16.00.

The total average cost of the recordkeeping burden per recordkeeper would be: $8.00.

Background

The Act authorizes the establishment of a national beef promotion and research program. The final Order establishing a beef promotion and research program was published in the **Federal Register** on July 18, 1986, (51 FR 21632) and assessments began on October 1, 1986. The program is administered by the Board which is composed of 110 domestic cattle producers and importers. The program is funded by a $1-per-head assessment on producer marketings of cattle in the United States and an equivalent amount on imported cattle, beef, and beef products. In 45 States, QSBCs receive the $1-per-head of cattle assessment remitted under the program and retain up to half of the $1 for State-directed programs and remit the remainder to the Board. The Board receives all import assessments and all producer assessments in the five States with relatively small cattle numbers that do not have QSBCs. In 2000, the 45 QSBCs received a total of about $80 million in assessments. QSBCs retained about $40 million and remitted approximately $40 million to the Board.

The domestic assessment, due each time cattle are sold by a producer, is collected by the buyer or ''collecting person'' and remitted to the Board or QSBC. The term ''producer'' is defined as follows: ''any person who owns or acquires ownership of cattle; provided, however, that a person shall not be considered a producer within the meaning of this subpart if (a) the person's only share in the proceeds of a sale of cattle or beef is a sales commission, handling fee, or other service fee; or (b) the person (1) acquired ownership of cattle to facilitate the transfer of ownership of such cattle from the seller to a third-party, (2) resold such cattle no later than 10 days from the date on which the person acquired ownership, and (3) certified, as required by regulations prescribed by the Board and approved by the Secretary, that the requirements of this provision have been satisfied.''

When cattle are sold within 10 days of purchase by a person who is not a producer under the above definition, the collecting person is not required to collect the $1 assessment from the person (seller), if the seller provides the collecting person with a Statement of Certification of Non-Producer Status on a form approved by the Board and the Secretary. The person claiming non-producer status must submit to the collecting person a Statement of Certification of Non-Producer Status ''at the time of sale'' in lieu of paying the assessment.

In a similar fashion, this modification to the regulations to permit producer-directed payment of assessments will result in the collecting person, at the time of sale, collecting a document certifying that the assessment had been paid in advance by the producer.

The Department believes that this producer-directed payment option will be used by producers of a relatively small share of all cattle sold. This rule will apply only to cattle of a producer's own production transported to another State under retained ownership for feeding prior to sale as slaughter cattle. Utilizing this option would permit a producer who retains ownership of cattle to ensure that the QSBC located in the State where the producer resides receives the $1 checkoff rather than the QSBC in the State in which the cattle are located when sold. This final rule could increase checkoff revenue for many QSBCs such as those located in the southeastern United States that currently do not receive revenue from cattle owned and sold by producers residing in the southeastern States who use feedlots in States such as Texas, Kansas, Nebraska, Oklahoma, and Colorado to finish cattle before selling the cattle to packers.

Since States retain up to one-half of the $1-per-head checkoff for use in State directed programs, providing producers with the flexibility and the opportunity to direct payment of the assessment to their home State likely would increase revenue in many States such as Florida, Georgia, Alabama, and Mississippi with limited feedlot capacity.

Comments

On October 19, 2001, the Department published in the **Federal Register** (66 FR 53127) for comment a proposed rule to amend the Rules and Regulations established under the Act. The proposed rule provided the opportunity for a producer to pay the $1-per-head assessment to the QSBC located in the producer's State of residence prior to sale, subject to certain conditions.

The proposed rule was published with a request for comments to be submitted by December 18, 2001. The Department received comments from 47 national and State beef and dairy cattle organizations, and brand inspectors, as well as from cattle producers. Comments from 44 commenters were filed on time. Eleven commenters supported the proposed rule while four commenters proposed modifications and requested clarifications to it. Twenty-nine commenters opposed the proposed rule. Three comments were submitted after the comment period ended. The late comments, however, supported the rule as proposed.

The comments are discussed below, together with a description of the changes made by the Department in this final rule. In general, persons and organizations in States that may see an increase in assessments supported the proposed rule, while persons and organizations in the primary cattle feeding States that may see a reduction in assessments did not support the proposed rule.

Three commenters suggested producers, QSBCs, the Board, the feedlot operator, and the purchaser of the cattle should maintain copies of the Certification of Producers Direct Payment of Cattle Assessments forms on file for 3 years rather than 2 years. The standard procedure currently in place for random compliance audits of remitters is 3 years. The Department believes that this comment has merit, and this change is reflected in § 1260.311(f)(4) by removing 2 years and inserting 3 years.

One commenter asserted that the QSBC which receives the additional checkoff funds must be responsible for compliance. Currently, QSBCs are responsible for collecting and remitting the assessment to the Board and ensuring that those persons subject to the assessment remit them. In States where there is no QSBC, the Board is responsible for compliance. Accordingly, the Department is not making any changes in response to this comment.

The same commenter suggested that the term Board could be omitted from § 1260.311(f)(1), as only

the QSBC located in the State where the producer resides would apply. The commenter noted that producers in the five States without a QSBC will be unable to use this option as their dollar already is currently directed to the Board. The Department believes that this comment has merit and therefore the term Board is removed from § 1260.311(f)(1) in this final rule.

Five commenters stated that the regulations must specify what ''cattle of a producer's own production'' are in order to ensure this includes only offspring from a producer's own cow herd that have been continuously and exclusively under his or her ownership, and are being sent to feedlots with the intent of continuously owning the cattle through the entire feeding phase. The Department believes that this comment has merit and additional clarification regarding the meaning of ''cattle of a producer's own production'' is reflected in new § 1260.311(f)(iii) of this final rule.

Three commenters asserted that producers must list the number of their cow herds on the certificate as a method to cross check that the cattle transported to the feedyard qualify as retained ownership cattle. The Department believes that this additional requirement would not have any impact on compliance activities. The current compliance practices in the industry and the proposed certification process are sufficient to ensure compliance with the provisions of the Act, the Beef Promotion and Research Order (Order), and this final rule.

Two commenters suggested that the regulation should apply only to true retained ownership cattle. Since cattle sold through auctions, dealer/order buyers, and country sales are not applicable, the commenters believe these references should be removed from the table in § 1260.311(c). While the table in § 1260.311(c) is being updated as part of this final rule, it does not directly apply to the producer payment option of this final rule. It specifies the party responsible for collecting and remitting assessments in designated States. Accordingly, the Department is not making any changes in response to these comments.

Another commenter stated that assessments should be collected on cattle sold within the first 30 days of movement and the dollars returned to the State of Origin under the current rules. The Department believes that the option provided for in this rule is flexible and cost effective for producers. Under § 1260.311(f)(1)(ii) of the rule producers can pay the assessment either before or at the time the cattle are transported. Therefore, we are not making any changes to the rule in response to this comment.

Three commenters stated that the regulations should address death loss on cattle that are prepaid in the State of Origin. The commenters suggested that the proposal should specify that the producer will not be given a credit of their dollar for cattle that have died before they are shipped to the ultimate purchaser of the cattle. The Department believes that this comment has merit. Because of the low mortality rates and the costs associated with administrative matters involving investigation of animal death and producer, QSBC and Board notification, the costs associated with producer credits would be substantial, far in excess of the $1-per-head assessment paid by the producer. Therefore, we are adding a new paragraph 5 to § 1260.311(f) of this final rule to prohibit credits of assessments for those cattle lost because of death.

Three commenters asserted that many feedlots and retained ownership programs involve sorting and co-mingling of cattle from various owners into numerous different pens and lots and then sold to the packer at different times. Consequently, if the assessment is prepaid, the documentation on those cattle could be confusing since they will not be processed in the same lot. The Department believes the feedlot should not be required to complete a new form. Feedlots may note on the existing form that the specific cattle marketed have been prepaid in order to facilitate their own recordkeeping. Accordingly, we are not making any changes in response to this comment.

One commenter expressed concern that some cattle may be placed on feed with the producer having the intention of retaining ownership through the entire feeding cycle. However, during the feeding cycle, the producer may decide to sell a partial interest in the cattle within the feedyard. The purpose of this rule is to provide producers the opportunity to voluntarily pay the $1-per-head assessment to the QSBC on cattle transported to a feedyard under retained ownership. This rule does not provide producers with an opportunity for a credit. If a producer transfers any interest in the cattle prior to their sale to a purchaser, the cattle are no longer covered under the provisions of this rule. Consequently, an additional assessment is due as a result of the new owner transfer, even if the transfer of ownership is only partial.

Four commenters asserted that the QSBC receiving the checkoff should be required to send a new verification form to the feedlot to notify it that the checkoff has been received. The Department believes that any additional certification of producer payment by QSBCs would be unnecessary and burdensome. As noted previously, the Department believes that the current certification is sufficient to ensure compliance with the provisions of this final rule. Therefore, we are not making any changes in response to this comment.

One commenter stated that the assessments should be paid at the time of transport. Under § 1260.311(f)(1)(ii) of the rule producers can pay the assessment either before or at the time the cattle are transported.

One commenter suggested that the packer should retain a copy of the certificate, not the feedlot, because the packer, as the purchaser, is responsible for collecting the checkoff for slaughter cattle. The commenter believes that this would provide a simple and streamlined procedure for compliance and audit. Section 1260.311(f)(4) requires that the certification form be sent to all parties involved, including packers when they act as purchasers.

One commenter suggested that the producer should be responsible for ensuring the paperwork accompanies the cattle throughout the production process. Section 1260.311(f)(1)(i) requires that the certification be completed by the producer and sent to the feedlot operator. This certification will accompany the cattle when they are sold.

One commenter believes that the final regulation will create compliance problems and will be difficult to correctly monitor and may cause double assessments, incorrect assessments, or no assessments collected. The Department believes that because of the anticipated small number of producers that will prepay the assessment, any compliance problems that may arise will be manageable. In addition, the rule provides that the required certification must accompany the cattle through the entire process, thereby minimizing any potential compliance problems. Further, if the certification does not accompany the cattle, those cattle would be assessed the $1-per-head checkoff in accordance with the Act and the Order.

Twenty-eight commenters asserted that the proposal would increase paperwork required to accompany cattle transported to other States. The Department does not anticipate a significant increase in administrative costs and paperwork for those States primarily affected by this final rule because of the anticipated small number of producers who will prepay the assessment.

Twenty-seven commenters asserted that the top five cattle producing States would have to deal with this new procedure more frequently than other States. While the Department recognizes that the larger cattle producing States will likely be more affected, we believe that because of the anticipated small number of producers who will prepay the assessment, any additional burden will be small.

Twenty-nine commenters asserted that in the hosting State, livestock markets, packing plants, feedlots, etc., will need to implement a new accounting procedure to exempt the checkoff from this type of transaction. The Department believes that the certification form completed by the producer should not require persons to implement a new accounting system since the cattle will have already been assessed.

Twenty-nine commenters asserted that in the hosting State, double assessments may increase if cattle arrive without the new certification. If the certification does not accompany the cattle, those cattle would be assessed the $1-per-head checkoff in accordance with the Act and the Order. It is the responsibility of the producer to ensure that the certification form accompanies the cattle when they are transported to the feedlot.

Twenty-nine commenters asserted that if out of State cattle arrive without the certification, brand inspectors will, by law, collect the assessment. As previously noted, if the certification form does not accompany the cattle, the brand inspector will collect the assessment in accordance with the Act, the Order, and the Rules and Regulations.

Twenty-one commenters asserted that if out of State cattle arrive without the prepaid document, QSBCs will have increased workload due to processing the double assessments. The Department does not anticipate a significant increase in workload or paperwork burden because of the anticipated small number of producers who will prepay the assessment. If cattle arrive without the required certification, the cattle will be assessed in accordance with the Act, the Order, and the Rules and Regulations.

One commenter asserted that the proposal would divert a significant amount of funds away from promotion into record and paperwork management. The Department does not expect that there will be a significant increase in workload or paperwork burden because of the anticipated small number of producers who will prepay the assessment.

Additional Changes. We are making nonsubstantiative changes to § 1260.311(f) for the purpose of clarity. In addition, the Board recommended that the chart under § 1260.311(c) be corrected and updated to reflect the current collection and remittance procedures in States where brand inspectors are responsible for collecting and remitting assessment. Based upon our review of the Board's comment, we are making changes to the chart in this rule as follows:

Add the State of Nevada and change collecting person (CP) to brand inspector (B) in Idaho for transactions which occur at auction markets and slaughter/packer. The changes reflect those additions and changes to the chart under § 1260.311(c).

States	Sales through auction markets	Sales to a slaughter/ packer	Sales to a feedlot	Sales to an order buyer/ dealer	Country sales
Nevada	B	B	B	B	B
Idaho	B	B	B	B	B

Pursuant to 5 U.S.C. 553, it is found and determined that good cause exists for not postponing the effective date of this rule until 30 days after publication in the **Federal Register**. An effective date of October 1, 2002, will allow producers to take advantage of this action in time for fall cattle marketings. This rule permits producers who retain ownership of cattle that are shipped to another State for feeding to pay the $1 checkoff to the QSBC located in the State where the producer resides rather than the QSBC in the State in which the cattle are located when sold.

List of Subjects in 7 CFR Part 1260

Advertising, Agricultural research, Imports, Marketing agreements, Meat and meat products, Reporting and recordkeeping requirements.

For the reasons set forth in the preamble, 7 CFR part 1260 is amended as follows:

PART 1260—BEEF PROMOTION AND RESEARCH

1. The authority citation of part 1260 continues to read as follows:

Authority: 7 U.S.C. 2901–2911.

2. In § 1260.311, revise paragraphs (a) and (c) and add paragraph (f) to read as follows:

§ 1260.311 Collecting persons for purposes of collection of assessments.

* * * * *

(a) Except as provided in paragraphs (b), (c), and (f) of this section, each person making payment to a producer for cattle purchased in the United States shall collect from the producer an assessment at the rate of $1-per-head of cattle purchased and shall be responsible for remitting assessments to the QSBC or the Board as provided in § 1260.312. The collecting person shall collect the assessment at the time the collecting person makes payment or any credit to the producer's account for the cattle purchased. The person paying the producer shall give the producer a receipt indicating payment of the assessment.

* * * * *

(c) In the States listed in the following chart there exists a requirement that cattle be brand inspected by State authorized inspectors prior to sale. In addition, when cattle are sold in the sales transactions listed below in those States, these State authorized inspectors are authorized to, and shall, except as provided for in paragraph (f) of this section, collect assessments due as a result of the sale of cattle. In those transactions in which inspectors are responsible for collecting assessments, the person paying the producer shall not be responsible for the collection and remittance of such assessments. The following chart identifies the party responsible for collecting and remitting assessments in these States:

State	Sales through auction market	Sales to a slaughter/ packer	Sales to a feedlot	Sales to an order buyer/dealer	Country sales [1]
Arizona	CP	CP	CP	B	B
California	CP	CP	B	B-CP	B
Colorado	CP	B	B	B	B
Idaho	B	B	B	B	B
Montana	CP	B	B	B	B
Nebraska	CP	CP	B-CP	B-CP	B-CP
Nevada	B	B	B	B	B
Oregon	CP	B-CP	B	B	B
New Mexico	CP	B-CP	B-CP	B-CP	B-CP
Utah	CP	B-CP	B	B	B
Washington	CP	CP	B	B-CP	B
Wyoming	CP	B	B	B	B

Key:
B—Brand inspector has responsibility to collect and remit assessments due.
CP—The person paying the producer shall be the collecting person and has responsibility to collect and remit the assessments due.
B-CP—Brand inspector has responsibility to collect; however, when there has not been a physical brand inspection the person paying the producer shall be the collecting person and has the responsibility to collect and remit assessments due.
[1] For the purpose of this subpart, the term ''country sales'' shall include any sales not conducted at an auction or livestock market and which is not a sale to a slaughter/packer, feedlot, or order buyer or dealer.

* * * * *

(f)(1) In lieu of each person making a payment to a producer for cattle purchased in the United States, producers are provided the option in accordance with this paragraph (f) to remit the assessment to the QSBC in the State in which the producer resides. A producer who transports, prior to sale, cattle of that producer's own production to another State, may elect to make a directed payment of the $1-per-head assessment in advance to the QSBC in the State in which the producer resides, provided that the producer fulfills the following requirements:

(i) Transports the cattle under retained ownership to a feedlot or similar location, and the cattle remain at such location, prior to sale, for a period not less than 30 days; and

(ii) The producer, either before or at the time of transport, signs a Certification of Producer Directed Payment of Cattle Assessments form indicating that the assessment has been paid in advance, and remits the assessment to the appropriate QSBC. A copy of the certification form indicating the payment of the assessment shall be sent by the producer with the assessment when remitted to the QSBC. The producer also shall send a copy of the certification form to the feedlot operator at the time the cattle are delivered. A copy of the certification form also shall be given to the purchaser of the cattle by the feedlot operator at the time of sale.

(2) The certification form will include the following information:

(i) Producer's Name.
(ii) Producer's social security number or Tax I.D. number.
(iii) Producer's address (street address or P.O. Box, city, State, and zip code).
(iv) Signature of Producer.
(v) Producer's State of residence.
(vi) Number of cattle shipped to out of State feedyard under retained ownership.
(vii) Date cattle shipped.
(viii) State where cattle will be on feed.
(ix) Name of feedyard.
(x) Address of feedyard.

(3) Cattle of a producer's own production shall be those cattle which meet all of the following requirements:

(i) The cattle shall be offspring of a producer's own cow herd;

(ii) The cattle shall have been continuously and exclusively under the producer's ownership; and

(iii) The cattle are transported to a feedlot with such producer continuously owning the cattle through the entire feeding phase.

(4) For those cattle for which the assessment has been producer directed and paid in advance pursuant to paragraph (f)(1) of this section, the purchaser of the cattle shall not be required to collect and remit the assessment, but shall maintain on file a copy of the Certification of Producer Directed Payment of Cattle Assessments form completed and signed by the producer who originally transported the cattle under retained ownership.

(5) For those cattle for which the assessment has been producer directed and paid in advance pursuant to paragraph (f)(1) of this section, copies of the completed Certification of Producer Directed Payment of Cattle Assessments form shall be maintained on file by the producer, the QSBC or the Board, the feedlot operator, and the purchaser of the cattle for 3 years.

(6) Producers shall not receive credit of the assessment required to be paid pursuant to paragraph (f)(1) of this section for those cattle lost because of death.

Dated: September 26, 2002.

A.J. Yates,

Administrator, Agricultural Marketing Service.

[FR Doc. 02–24968 Filed 9–27–02; 3:57 pm]

BILLING CODE 3410–02–P

DEPARTMENT OF AGRICULTURE

Food Safety and Inspection Service

9 CFR Parts 331 and 381

[Docket No. 02–028F]

Termination of Designation of the State of Maine With Respect to the Inspection of Meat and Meat Food Products and Poultry and Poultry Food Products

AGENCY: Food Safety and Inspection Service, USDA.

ACTION: Direct final rule and termination of designation.

SUMMARY: This direct final rule amends the Federal meat and poultry products inspection regulations by terminating the designation of the State of Maine under Titles I, II, and IV of the Federal Meat Inspection Act (FMIA) and under sections 1 through 4, 6 through 11, and 12 through 22 of the Poultry Products Inspection Act (PPIA).

DATES: This direct final rule will be effective November 1, 2002 unless FSIS receives written adverse comments within the scope of this rulemaking or written notice of intent to submit

adverse comments within the scope of this rulemaking on or before October 23, 2002. If FSIS receives adverse comments, a timely withdrawal will be published in the **Federal Register** informing the public that the rule will not take effect.

FOR FURTHER INFORMATION CONTACT: Dr. William Leese, 202 418–8900, william.leese@fsis.usda.gov.

SUPPLEMENTARY INFORMATION:

Background

Section 301(c) of the FMIA (21 U.S.C. 661(c)) and section 5(c) of the PPIA (21 U.S.C. 454(c)) authorize the Secretary of Agriculture (Secretary) to designate a State as one in which the provisions of Titles I and IV of the FMIA and sections 1–4, 6–11, and 12–22 of the PPIA will apply to operations and transactions wholly within the State after the Secretary has determined that requirements at least equal to those imposed under the Acts have not been developed and effectively enforced by the State.

At different times in the past, the Secretary designated the State of Maine under section 301(c) of the FMIA and section 5(c) of the PPIA as a State in which the Federal Government is responsible for providing meat and poultry products inspection at eligible establishments and for otherwise enforcing the applicable provisions of the FMIA and the PPIA with regard to intrastate activities in the State. These designations were undertaken by the Secretary when it was determined that the State of Maine was not in a position to enforce requirements that are at least equal to the requirements of FMIA and PPIA enforced by the Federal Government.

On January 2, 1971, the Federal Government assumed the responsibility of administering the authorities provided for under sections 11(b) and (c) of the PPIA (21 U.S.C. 460(b) and (c)). On May 12, 1980, the Federal Government assumed the responsibility of administering the authorities provided for under sections 202 and 203 of the FMIA (21 U.S.C. 642 and 643).

The Director of Agriculture of the State of Maine has advised FSIS that on October 17, 2002, the State of Maine will publish regulations declaring that it will administer a State meat and poultry products inspection program that includes requirements at least equal to those imposed under the Federal meat and poultry products inspection program.

Section 301(c) of the FMIA and section 5(c) of the PPIA provide that whenever the Secretary of Agriculture determines that any designated State has developed and will enforce State meat and poultry products inspection requirements at least equal to those imposed by the Federal Government under the FMIA and the PPIA with regard to intrastate operations and transactions, the Secretary will terminate the designation of such State. The Secretary has determined that the State of Maine has developed, and will enforce, such a State meat and poultry products inspection program in accordance with the applicable provisions of the FMIA and the PPIA.

Establishments have the option to apply for Federal or State inspection. However, product produced under State inspection is limited to distribution in intrastate commerce.

Executive Order 12866

This final rule is issued in conformance with Executive Order 12886 and has been determined not to be a major rule. It will not result in an annual effect on the economy of $100 million or more and will not adversely affect the economy or any segment of the economy. Because this final rule is not a significant rule under Executive Order 12866, it has not undergone review by the Office of Management and Budget.

Effect on Small Entities

The FSIS Administrator has determined that this action will not have a significant economic impact on a substantial number of small entities, as defined by the Regulatory Flexibility Act (Pub. L. 96–354; 6 U.S.C. 601). As stated above, the State of Maine is assuming a responsibility, previously limited to the Federal Government, of administering a meat and poultry products inspection program for intrastate operations and transactions.

Additional Public Notification

FSIS has considered the potential civil rights impact of this final rule on minorities, women, and persons with disabilities. Public involvement in all segments of rulemaking and policy development is important. Consequently, in an effort to better ensure that minorities, women, and persons with disabilities are aware of this rulemaking, FSIS will announce it and provide copies of this **Federal Register** publication in the FSIS Constituent Update. FSIS provides a weekly Constituent Update, which is communicated via Listserv, a free e-mail subscription service. In addition, the update is available on-line through the FSIS web page located at *http://www.fsis.usda.gov.* The update is used to provide information regarding FSIS policies, procedures, regulations, **Federal Register** notices, FSIS public meetings, recalls, and any other types of information that could affect or would be of interest to our constituents/stakeholders. The constituent Listserv consists of industry, trade, and farm groups, consumer interest groups, allied health professionals, scientific professionals, and other individuals that have requested to be included. Through the Listserv and web page, FSIS is able to provide information to a much broader, more diverse audience.

For more information contact the Congressional and Public Affairs Office, at (202) 720–9113. To be added to the free e-mail subscription service (Listserv) go to the ''Constituent Update'' page on the FSIS web site at *http://www.fsis.usda.gov/oa/update/update.htm.* Click on the ''Subscribe to the Constituent Update Listserv'' link, then fill out and submit the form.

List of Subjects

9 CFR Part 331

Meat inspection.

9 CFR Part 381

Poultry and poultry products.

Accordingly, 9 CFR parts 331 and 381 are amended as follows:

PART 331—[AMENDED]

1. The authority citation for part 331 continues to read as follows:

Authority: 21 U.S.C. 601–695; 7 CFR 2.17, 2.55.

§ 331.2 [Amended]

2. The table in § 331.2 is amended by removing ''Maine'' from the ''State'' column and by removing the corresponding date.

§ 331.6 [Amended]

3. The table in § 331.6 is amended by removing ''Maine'' from the ''State'' column in three places and by removing the corresponding dates.

PART 381—[AMENDED]

4. The authority citation for part 381 continues to read as follows:

Authority: 7 U.S.C. 138F; 7 U.S.C. 450; 21 U.S.C. 451–470; 7 CFR 2.18, 2.53.

§ 381.221 [Amended]

5. The table in § 381.221 is amended by removing ''Maine'' from the ''States'' column and by removing the corresponding date.

§ 381.224 [Amended]

6. The table in § 381.224 is amended by removing ''Maine'' from the ''State''

column in three places and by removing the corresponding dates.

Done in Washington, DC on September 25, 2002.

Garry L. McKee,

Administrator.

[FR Doc. 02–24979 Filed 10–1–02; 8:45 am]

BILLING CODE 3410–DM–P

FEDERAL RESERVE SYSTEM

12 CFR Part 226

[Regulation Z; Docket No. R–1130]

Truth in Lending

AGENCY: Board of Governors of the Federal Reserve System.

ACTION: Final rule; staff commentary.

SUMMARY: The Board is publishing a final rule amending the staff commentary that interprets the requirements of Regulation Z (Truth in Lending). The Board is required to adjust annually the dollar amount that triggers requirements for certain mortgages bearing fees above a certain amount. The Home Ownership and Equity Protection Act of 1994 (HOEPA) sets forth rules for home–secured loans in which the total points and fees payable by the consumer at or before loan consummation exceed the greater of $400 or 8 percent of the total loan amount. In keeping with the statute, the Board has annually adjusted the $400 amount based on the annual percentage change reflected in the Consumer Price Index that is in effect on June 1. The adjusted dollar amount for 2003 is $488.

DATES: Effective January 1, 2003.

FOR FURTHER INFORMATION CONTACT: Minh–Duc T. Le, Staff Attorney, Division of Consumer and Community Affairs, Board of Governors of the Federal Reserve System, at (202) 452–3667. For the users of Telecommunications Device for the Deaf (''TDD'') only, contact (202) 263–4869.

SUPPLEMENTARY INFORMATION:

I. Background

The Truth in Lending Act (TILA; 15 U.S.C. 1601 – 1666j) requires creditors to disclose credit terms and the cost of consumer credit as an annual percentage rate. The act requires additional disclosures for loans secured by a consumer's home, and permits consumers to cancel certain transactions that involve their principal dwelling. TILA is implemented by the Board's Regulation Z (12 CFR part 226). The Board's official staff commentary (12 CFR part 226 (Supp. I)) interprets the regulation, and provides guidance to creditors in applying the regulation to specific transactions.

In 1995, the Board published amendments to Regulation Z implementing HOEPA, contained in the Riegle Community Development and Regulatory Improvement Act of 1994, Pub. L. 103–325, 108 Stat. 2160 (60 FR 15463). These amendments are contained in § 226.32 and 226.34 of the regulation and impose substantive limitations and additional disclosure requirements on certain closed–end mortgage loans bearing rates or fees above a certain percentage or amount. As enacted, the statute requires creditors to comply with the HOEPA rules if the total points and fees payable by the consumer at or before loan consummation exceed the greater of $400 or 8 percent of the total loan amount. TILA and Regulation Z provide that the $400 figure shall be adjusted annually on January 1 by the annual percentage change in the Consumer Price Index (CPI) that was reported on the preceding June 1. (15 U.S.C. 1602(aa)(3) and 12 CFR 226.32(a)(1)(ii)). The Board adjusted the $400 amount to $480 for the year 2002.

The Bureau of Labor Statistics publishes consumer–based indices monthly, but does not ''report'' a CPI change on June 1; adjustments are reported in the middle of each month. The Board uses the CPI–U index, which is based on all urban consumers and represents approximately 80 percent of the U.S. population, as the index for adjusting the $400 dollar figure. The adjustment to the CPI–U index reported by the Bureau of Labor Statistics on May 15, 2002, was the CPI–U index ''in effect'' on June 1, and reflects the percentage increase from April 2001 to April 2002. The adjustment to the $400 figure below reflects a 1.64 percent increase in the CPI–U index for this period and is rounded to whole dollars for ease of compliance.

II. Adjustment and Commentary Revision

For the reasons set forth in the preamble, for purposes of determining whether a mortgage transaction is covered by 12 CFR 226.32 (based on the total points and fees payable by the consumer at or before loan consummation), a loan is covered if the points and fees exceed the greater of $488 or 8 percent of the total loan amount, effective January 1, 2003. Comment 32(a)(1)(ii)–2, which lists the adjustments for each year, is amended to reflect the dollar adjustment for 2003. Because the timing and method of the adjustment is set by statute, the Board finds that notice and public comment on the change are unnecessary.

III. Regulatory Flexibility Analysis

The Board certifies that this amendment will not have a substantial effect on regulated entities because the only change is to raise the threshold for transactions requiring HOEPA disclosures.

List of Subjects in 12 CFR Part 226

Advertising, Federal Reserve System, Mortgages, Reporting and recordkeeping requirements, Truth in lending.

For the reasons set forth in the preamble, the Board amends Regulation Z, 12 CFR part 226, as set forth below:

PART 226—TRUTH IN LENDING (REGULATION Z)

1. The authority citation for part 226 continues to read as follows:

Authority: 12 U.S.C. 3806; 15 U.S.C. 1604 and 1637(c)(5).

2. In Supplement I to part 226, under § 226.32 Requirements for certain closed–end home mortgages, under Paragraph 32(a)(1)(ii), paragraph 2.viii is added as follows:

SUPPLEMENT I TO PART 226—OFFICIAL STAFF INTERPRETATIONS

* * * * *

Subpart E—Special Rules for Certain Home Mortgage Transactions

* * * * *

§ 226.32 Requirements for certain closed–end home mortgages.

32(a) Coverage

* * * * *

Paragraph 32(a)(1)(ii)

* * * * *

2. Annual adjustment of $400 amount.

* * * * *

viii. For 2003, $488, reflecting a 1.64 percent increase in the CPI–U from June 2001 to June 2002, rounded to the nearest whole dollar.

* * * * *

By order of the Board of Governors of the Federal Reserve System, acting through the Director of the Division of Consumer and Community Affairs under delegated authority, September 26, 2002.

Jennifer J. Johnson,

Secretary of the Board.

[FR Doc. 02–25037 Filed 10–1–02; 8:45 am]

BILLING CODE 6210–01–S

DEPARTMENT OF TRANSPORTATION

Federal Aviation Administration

14 CFR Part 39

[Docket No. 2000–SW–55–AD; Amendment 39–12898; AD 2002–20–03]

RIN 2120–AA64

Airworthiness Directives; Eurocopter France Model AS332C, L, L1, and L2; AS350B, BA, B1, B2, B3, and D; AS355E, F, F1, F2, and N; AS–365N2; AS 365 N3; SA330F, G, and J; SA–360C; SA–365C, C1, and C2; SA.316B and C; and SA.319B Helicopters

AGENCY: Federal Aviation Administration, DOT.

ACTION: Final rule.

SUMMARY: This amendment adopts a new airworthiness directive (AD) for the specified Eurocopter France (ECF) model helicopters that requires a one-time measurement of the electrical resistance between the ferry fuel tank (tank) electrostatic ground connector and the tank filler neck before the next refueling of an installed tank or before the first fueling after installing a tank. If the electrical resistance has a value more than 1.5 milliohms, this AD prohibits refueling the tank. This amendment is prompted by reports of an inadequate electrical bond between the electrostatic ground connector and its support on several tank installations. The actions specified by this AD are intended to prevent refueling a tank that is not adequately electrically bonded, which could generate an electric arc between the refueling nozzle and the tank, causing an explosion.

DATES: Effective November 6, 2002.

FOR FURTHER INFORMATION CONTACT: Ed Cuevas, Aviation Safety Engineer, FAA, Rotorcraft Directorate, Regulations Group, Fort Worth, Texas 76193–0111, telephone (817) 222–5355, fax (817) 222–5961.

SUPPLEMENTARY INFORMATION: A proposal to amend 14 CFR part 39 to include an AD for ECF Model AS332C, L, L1, and L2; AS350B, BA, B1, B2, B3, and D; AS355E, F, F1, F2, and N; AS–365N2; AS 365 N3; SA330F, G, and J; SA–360C; SA–365C, C1, and C2; SA.316B and C; and SA.319B helicopters was published in the **Federal Register** on May 16, 2002 (67 FR 34880). That action proposed to require, before the next refueling of an installed tank or before the first fueling after installing a tank, a one-time measurement of the electrical resistance between the tank electrostatic ground connector and the tank filler neck to determine if the electrical resistance has a value more than 1.5 milliohms. If the value of the electrical resistance is more than 1.5 milliohms, the proposal would prohibit refueling the tank.

The Direction Generale de L'Aviation Civile (DGAC), the airworthiness authority for France, notified the FAA that an unsafe condition may exist on ECF Model AS332C, L, L1, and L2; AS350B, BA, B1, B2, B3, and D; AS355E, F, F1, F2, and N; AS–365N2; AS 365 N3; SA330F, G, and J; SA–360C; SA–365C, C1, and C2; SA.316B and C; and SA.319B helicopters. The DGAC advises of the absence on several tanks of an electric bond between the electrostatic ground connector and its support. During refueling of a tank, the inadequate electrical bonding could generate an electric arc between the refueling nozzle of the tanker and the tank and could cause the tank to explode.

ECF has issued Telex No. 000112 dated June 6, 2000, which specifies a one-time measurement of the electrical resistance between the tank electrostatic ground connector and the tank filler neck to determine if the value is more than 1.5 milliohms. If the value of the electrical resistance of the electrical bonding is more than 1.5 milliohms, the service telex specifies a secondary procedure for measuring the electrical resistance. If the value of the electrical resistance is more than 1.5 milliohms after the secondary measurement, the tank is unusable and the telex specifies a repair. The DGAC classified this telex as mandatory and issued AD 2000–302(A), dated July 12, 2000, to ensure the continued airworthiness of these helicopters in France.

Interested persons have been afforded an opportunity to participate in the making of this amendment. No comments were received on the proposal or the FAA's determination of the cost to the public. The FAA has determined that air safety and the public interest require the adoption of the rule as proposed.

We estimate that 736 helicopters of U.S. registry will be affected by this AD. Measuring the electrical resistance between the tank electrostatic ground connector and the tank filler neck will take approximately ½ work hour per helicopter to accomplish, and the average labor rate is $60 per work hour. Based on these figures, the total cost impact of this AD on U.S. operators is estimated to be $22,080 for the first refueling of all installed tanks.

The regulations adopted herein will not have a substantial direct effect on the States, on the relationship between the national Government and the States, or on the distribution of power and responsibilities among the various levels of government. Therefore, it is determined that this final rule does not have federalism implications under Executive Order 13132.

For the reasons discussed above, I certify that this action (1) is not a ''significant regulatory action'' under Executive Order 12866; (2) is not a ''significant rule'' under DOT Regulatory Policies and Procedures (44 FR 11034, February 26, 1979); and (3) will not have a significant economic impact, positive or negative, on a substantial number of small entities under the criteria of the Regulatory Flexibility Act. A final evaluation has been prepared for this action and it is contained in the Rules Docket. A copy of it may be obtained from the Rules Docket at the location provided under the caption **ADDRESSES.**

List of Subjects in 14 CFR Part 39

Air transportation, Aircraft, Aviation safety, Safety.

Adoption of the Amendment

Accordingly, pursuant to the authority delegated to me by the Administrator, the Federal Aviation Administration amends part 39 of the Federal Aviation Regulations (14 CFR part 39) as follows:

PART 39—AIRWORTHINESS DIRECTIVES

1. The authority citation for part 39 continues to read as follows:

Authority: 49 U.S.C. 106(g), 40113, 44701.

§ 39.13 [Amended]

2. Section 39.13 is amended by adding a new airworthiness directive to read as follows:

2002–20–03 Eurocopter France: Amendment 39–12898. Docket No. 2000–SW–55–AD.

Applicability: Model AS332C, L, L1, and L2; AS350B, BA, B1, B2, B3, and D; AS355E, F, F1, F2, and N; AS–365N2; AS 365 N3; SA330F, G, and J; SA–360C; SA–365C, C1, and C2 helicopters with a metal ferry fuel tank (tank), part number (P/N) 330A 871310.00, .01, .02, .03, or .04, installed; and Model SA.316B and C; and SA.319B helicopters with a tank, P/N 3160S 7375020, or 3160S 7375020–1, installed, certificated in any category.

Note 1: This AD applies to each helicopter identified in the preceding applicability provision, regardless of whether it has been otherwise modified, altered, or repaired in the area subject to the requirements of this AD. For helicopters that have been modified, altered, or repaired so that the performance of the requirements of this AD is affected, the owner/operator must request approval for an alternative method of compliance in

accordance with paragraph (b) of this AD. The request should include an assessment of the effect of the modification, alteration, or repair on the unsafe condition addressed by this AD; and if the unsafe condition has not been eliminated, the request should include specific proposed actions to address it.

Compliance: Required before the next refueling of an installed tank or before the first fueling after installing a tank, unless accomplished previously.

To prevent refueling a tank that is not adequately electrically bonded, which could generate an electric arc between the refueling nozzle and the tank, causing a fuel tank explosion, accomplish the following:

(a) Measure the electrical resistance between the tank electrostatic ground connector (item C) and the tank filler neck (item G) as shown in Figure 1 of this AD. If the value of the electrical resistance is more than 1.5 milliohms, refueling the tank is prohibited. See Figure 1 as follows:

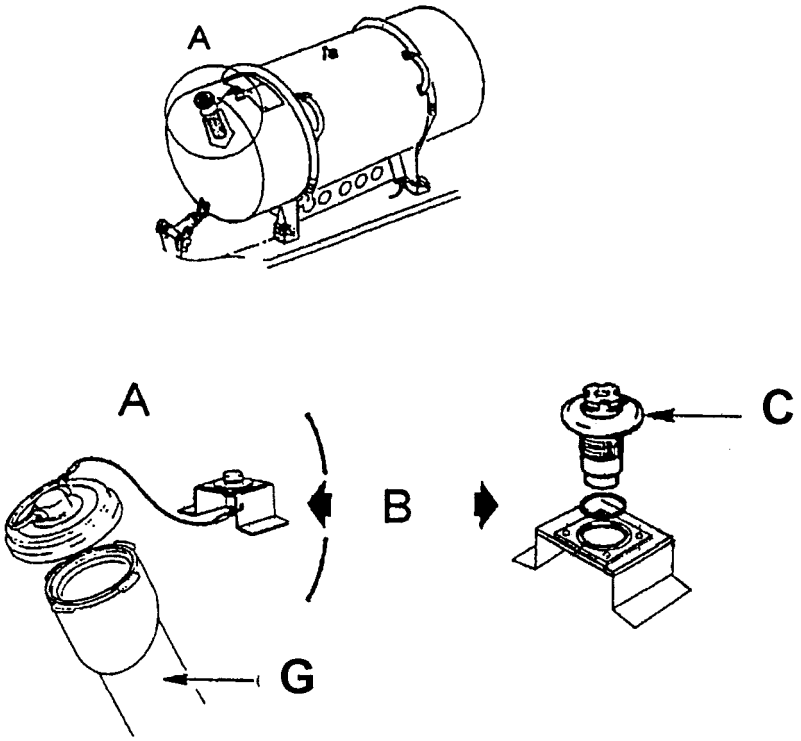

FIGURE 1 FERRY FUEL TANK

Note 2: Eurocopter Telex No. 000112 dated June 6, 2000, pertains to the subject of this AD.

(b) An alternative method of compliance or adjustment of the compliance time that provides an acceptable level of safety may be used if approved by the Manager, Regulations Group, Rotorcraft Directorate, FAA. Operators shall submit their requests through an FAA Principal Maintenance Inspector, who may concur or comment and then send it to the Manager, Regulations Group.

Note 3: Information concerning the existence of approved alternative methods of compliance with this AD, if any, may be obtained from the Regulations Group.

(c) Special flight permits will not be issued.

(d) This amendment becomes effective on November 6, 2002.

Note 4: The subject of this AD is addressed in Direction Generale De L'Aviation Civile (France) AD 2000–302(A), dated July 12, 2000.

Issued in Fort Worth, Texas, on September 19, 2002.

Eric D. Bries,

Acting Manager, Rotorcraft Directorate, Aircraft Certification Service.

[FR Doc. 02–24988 Filed 10–1–02; 8:45 am]

BILLING CODE 4910–13–P

DEPARTMENT OF TRANSPORTATION

Federal Aviation Administration

14 CFR Part 39

[Docket No. 2001–SW–41–AD; Amendment 39–12895; AD 2002–20–01

RIN 2120–AA64

Airworthiness Directives; Model HH–1K, TH–1F, TH–1L, UH–1A, UH–1B, UH–1E, UH–1F, UH–1H, UH–1L, and UH–1P; and Southwest Florida Aviation Model SW204, SW204HP, SW205, and SW205A–1 Helicopters, Manufactured by Bell Helicopter Textron, Inc. for the Armed Forces of the United States

AGENCY: Federal Aviation Administration, DOT.

ACTION: Final rule.

SUMMARY: This amendment adopts a new airworthiness directive (AD) for the

specified military surplus helicopters that requires updating the product identification, extending the application of the AD to other models, continuing the existing retirement time for certain main rotor tension-torsion (TT) straps, and adding the TT strap part numbers to the applicability. This amendment is prompted by the need to expand the applicability to additional military surplus helicopters and to add two part numbers to the applicability. The actions specified by this AD are intended to prevent failure of a TT strap, loss of a main rotor blade, and subsequent loss of control of the helicopter.

DATES: Effective November 6, 2002.

FOR FURTHER INFORMATION CONTACT: Michael Kohner, Aviation Safety Engineer, FAA, Rotorcraft Directorate, Rotorcraft Certification Office, Fort Worth, Texas 76193–0170, telephone (817) 222–5447, fax (817) 222–5783.

SUPPLEMENTARY INFORMATION: A proposal to amend 14 CFR part 39 to include an AD for Model HH–1K, TH–1F, TH–1L, UH–1A, UH–1B, UH–1E, UH–1F, UH–1H, UH–1L, and UH–1P; and Southwest Florida Aviation Model SW204, SW204HP, SW205, and SW205A–1 helicopters was published in the **Federal Register** on April 10, 2002 (67 FR 17305). That action proposed updating the product identification, extending the application of the AD to other models, continuing the existing retirement time for certain TT straps, and adding the TT strap part numbers to the applicability for the specified military surplus helicopters.

Interested persons have been afforded an opportunity to participate in the making of this amendment. Due consideration has been given to the comments received.

One commenter states that Model AH–1 series helicopter should be added to the applicability section of the AD, because Model AH–1 series helicopters are currently being operated in experimental and restricted categories, and have identical TT straps as the HH–1K and UH–1L helicopter that are included in the applicability of the AD. The commenter also states that the FAA should evaluate TT strap, part number 204–310–101–101, because ''this current production TT strap is life-limited * * * to 1,200 hours of operation or a calendar time of two years'' when installed on standard category type certificated Bell products.

The FAA concurs, however the intent of AD's, Docket Numbers 2001–SW–41–AD and 2001–SW–42–AD, was to update the model applicability and type certificate holders of AD 80–17–09 for the Model UH–1 military surplus helicopters. If we were to add the additional helicopter models or part numbers as proposed by the commenter, we would need to issue a Supplemental Notice of Proposed Rulemaking. To avoid further delay in the effectivity of the published proposals, we are issuing this final rule as proposed. The comments suggesting an expansion of these AD provisions to additional model helicopters and TT strap part numbers will be further evaluated and may be incorporated into a subsequent AD.

After careful review of the available data, including the comments noted above, the FAA has determined that air safety and the public interest require the adoption of the rule as proposed.

The FAA estimates that 75 helicopters of U.S. registry will be affected by this AD, that it will take approximately 8 work hours per helicopter to accomplish the required actions, and that the average labor rate is $60 per work hour. Required parts will cost approximately $10,484 per helicopter. Based on these figures, the total cost impact of the AD on U.S. operators is estimated to be $822,300.

The regulations adopted herein will not have a substantial direct effect on the States, on the relationship between the national Government and the States, or on the distribution of power and responsibilities among the various levels of government. Therefore, it is determined that this final rule does not have federalism implications under Executive Order 13132.

For the reasons discussed above, I certify that this action (1) is not a ''significant regulatory action'' under Executive Order 12866; (2) is not a ''significant rule'' under DOT Regulatory Policies and Procedures (44 FR 11034, February 26, 1979); and (3) will not have a significant economic impact, positive or negative, on a substantial number of small entities under the criteria of the Regulatory Flexibility Act. A final evaluation has been prepared for this action and it is contained in the Rules Docket. A copy of it may be obtained from the Rules Docket at the location provided under the caption **ADDRESSES.**

List of Subjects in 14 CFR Part 39

Air transportation, Aircraft, Aviation safety, Safety.

Adoption of the Amendment

Accordingly, pursuant to the authority delegated to me by the Administrator, the Federal Aviation Administration amends part 39 of the Federal Aviation Regulations (14 CFR part 39) as follows:

PART 39—AIRWORTHINESS DIRECTIVES

1. The authority citation for part 39 continues to read as follows:

Authority: 49 U.S.C. 106(g), 40113, 44701.

§ 39.13 [Amended]

2. Section 39.13 is amended by adding a new airworthiness directive to read as follows:

2002–20–01 Arrow Falcon Exporters, Inc. (previously Utah State University); Firefly Aviation Helicopter Services (previously Erickson Air-Crane Co.); Garlick Helicopters, Inc.; Global Helicopter Technology, Inc.; Hagglund Helicopters, LLC (previously Western International Aviation, Inc.); Hawkins and Powers Aviation, Inc.; International Helicopters, Inc.; Robinson Air Crane, Inc.; Smith Helicopters; Southern Helicopter, Inc.; Southwest Florida Aviation; Tamarack Helicopters, Inc. (previously Ranger Helicopter Services, Inc.); U.S. Helicopter, Inc.; and Williams Helicopter Corporation (previously Scott Paper Co.): Amendment 39–12895. Docket No. 2001–SW–41–AD.

Applicability: Model HH–1K, TH–1F, TH–1L, UH–1A, UH–1B, UH–1E, UH–1F, UH–1H, UH–1L, and UH–1P; and Southwest Florida Aviation Model SW204, SW204HP, SW205, and SW205A–1 helicopters, manufactured by Bell Helicopter Textron, Inc. (BHTI) for the Armed Forces of the United States, with main rotor tension-torsion (TT) strap, part number (P/N) 204–012–122–1, 204–012–122–5, 2601399, or 2606650, installed, certificated in any category.

Note 1: This AD applies to each helicopter identified in the preceding applicability provision, regardless of whether it has been otherwise modified, altered, or repaired in the area subject to the requirements of this AD. For helicopters that have been modified, altered, or repaired so that the performance of the requirements of this AD is affected, the owner/operator must request approval for an alternative method of compliance in accordance with paragraph (b) of this AD. The request should include an assessment of the effect of the modification, alteration, or repair on the unsafe condition addressed by this AD; and if the unsafe condition has not been eliminated, the request should include specific proposed actions to address it.

Compliance: Required before further flight, unless accomplished previously.

To prevent failure of a TT strap, loss of a main rotor blade, and subsequent loss of control of the helicopter, accomplish the following:

(a) Remove and replace any TT strap with 1,200 hours time-in-service (TIS) or 24 months since the initial installation, whichever occurs first.

(b) An alternative method of compliance or adjustment of the compliance time that provides an acceptable level of safety may be used if approved by the Manager, Rotorcraft Certification Office, Rotorcraft Directorate, FAA. Operators shall submit their requests through an FAA Principal Maintenance Inspector, who may concur or comment and

then send it to the Manager, Rotorcraft Certification Office.

Note 2: Information concerning the existence of approved alternative methods of compliance with this AD, if any, may be obtained from the Rotorcraft Certification Office.

(c) Special flight permits will not be issued.

(d) This amendment becomes effective on November 6, 2002.

Issued in Fort Worth, Texas, on September 18, 2002.

Eric Bries,

Acting Manager, Rotorcraft Directorate, Aircraft Certification Service.

[FR Doc. 02–24993 Filed 10–1–02; 8:45 am]

BILLING CODE 4910–13–P

DEPARTMENT OF HEALTH AND HUMAN SERVICES

Food and Drug Administration

21 CFR Part 101

[Docket No. 01Q–0313]

Food Labeling: Health Claims; Soluble Dietary Fiber From Certain Foods and Coronary Heart Disease

AGENCY: Food and Drug Administration, HHS.

ACTION: Interim final rule.

SUMMARY: The Food and Drug Administration (FDA) is amending the regulation authorizing a health claim on the relationship between beta-glucan soluble fiber from whole oat sources and reduced risk of coronary heart disease (CHD). The amendment adds as an additional eligible source of whole oat beta-glucan soluble fiber, the soluble fraction of alpha-amylase hydrolyzed oat bran or whole oat flour with a beta-glucan soluble fiber content of up to 10 percent on a dry weight basis (dwb) and not less than that of the starting material (dwb). We (FDA) are taking this action in response to a petition jointly filed by the Quaker Oats Co. and Rhodia, Inc. (the petitioners). We concluded previously that there was significant scientific agreement that a relationship exists between the beta-glucan soluble fiber of certain whole oat sources and the reduction of risk of CHD by lowering blood cholesterol levels. We now have concluded, based on the publicly available scientific evidence that, in addition to rolled oats, oat bran, and whole oat flour, the soluble fraction of alpha-amylase hydrolyzed oat bran or whole oat flour with a beta-glucan content up to 10 percent (dwb) and not less than that of the starting material (dwb) is an appropriate source of beta-glucan soluble fiber for the health claim. Therefore, we are amending the regulation that authorizes a health claim on the relationship between soluble fiber from whole oats and reduced risk of CHD to include this additional source of beta-glucan soluble fiber.

DATES: This interim final rule is effective October 2, 2002. Submit written or electronic comments by December 16, 2002.

ADDRESSES: Submit written comments to the Dockets Management Branch (HFA–305), Food and Drug Administration, 5630 Fishers Lane, rm. 1061, Rockville, MD 20852. Submit electronic comments to *http://www.fda.gov/dockets/ecomments*.

FOR FURTHER INFORMATION CONTACT: James E. Hoadley, Center for Food Safety and Applied Nutrition (HFS–830), Food and Drug Administration, 5100 Paint Branch Pkwy., College Park, MD, 20740–3835, 301–436–1450.

SUPPLEMENTARY INFORMATION:

I. Background

A. The Nutrition Labeling and Education Act of 1990

The Nutrition Labeling and Education Act of 1990 (the 1990 amendments) (Public Law 101–535) amended the Federal Food, Drug, and Cosmetic Act (the act) in a number of important ways, including confirming FDA's authority to regulate health claims on food labels and in food labeling.

We issued several new regulations in 1993 that implemented the health claim provisions of the 1990 amendments. Among these were § 101.14 (21 CFR 101.14) (58 FR 2478, January 6, 1993), which set out the rules for the authorization and use of health claims, and § 101.70 (21 CFR 101.70) (58 FR 2478, January 6, 1993), which established a process for petitioning the agency to authorize health claims about a substance-disease relationship and set out the types of information that any such petition must include. Each of these regulations became effective on May 8, 1993.

In addition, we conducted extensive reviews of the evidence on the 10 substance-disease relationships listed in the 1990 amendments, including dietary fiber and reduced risk of cardiovascular disease (CVD). As a result of our review, we have authorized claims that relate to 8 of these 10 relationships.

B. 1990 to 1993 Dietary Fiber and Cardiovascular Disease Health Claim Evaluation

During 1990 to 1993, we conducted an extensive review of the relationship between dietary fiber and CVD. We examined the then current state of scientific opinion regarding the role of total dietary fiber in general, without focusing on any particular dietary fiber. Although we denied the use of a health claim relating total dietary fiber to reduced risk of CVD (58 FR 2552, January 6, 1993), we authorized a health claim relating fruits, vegetables, and grain products that contain dietary fiber, particularly soluble dietary fiber, to reduced risk of CHD, one of the more common serious forms of CVD (58 FR 2552, January 6, 1993).

We concluded that, based on the totality of publicly available scientific evidence, there was significant scientific agreement that the evidence supported an association between diets low in saturated fat and cholesterol and high in fruits, vegetables, and grain products (i.e., foods that are low in saturated fat and cholesterol and that are good sources of dietary fiber) and reduced risk of coronary heart disease (58 FR 2552 at 2572). We therefore authorized a health claim in part 101 (21 CFR part 101) in § 101.77 on the association between diets low in saturated fat and cholesterol and high in vegetables, fruit, and grain products that contain soluble fiber and a reduced risk of CHD.

In the 1993 dietary fiber and CVD final rule, in response to a comment regarding the apparent hypocholesterolemic properties of specific food fibers, e.g., oat bran, we agreed that the effectiveness of naturally occurring fibers in foods may be documented for specific food products (e.g., oat bran meeting specified parameters) (58 FR 2552 at 2567). We further stated that if a manufacturer could document, through appropriate studies, that dietary consumption of the soluble fiber in its particular food has the effect of lowering low density lipoprotein (LDL)-cholesterol, and has no adverse effects on other heart disease risk factors (e.g., high density lipoprotein (HDL)-cholesterol), it should petition for a health claim for its particular product (58 FR 2552 at 2567).

C. 1997 Soluble Fiber From Whole Oats and Coronary Heart Disease Health Claim

We subsequently received a petition for, and authorized, a health claim on the relationship between soluble fiber from whole oats and reduced risk of CHD (the soluble fiber from whole oats final rule) (62 FR 3584, January 23, 1997; modified at 62 FR 15343, March 31, 1997). We initially proposed to authorize a health claim on the association between oat bran and oatmeal and reduced risk of CHD (the oats proposed rule) (61 FR 296, January

4, 1996). However, we concluded in the final rule that the type of soluble fiber found in whole oats, i.e., beta-glucan soluble fiber, is the component primarily responsible for the hypocholesterolemic effects associated with consumption of whole oat foods as part of a diet that is low in saturated fat and cholesterol (62 FR 3584 at 3585). We reached this conclusion based on evidence that there is a dose response between the level of beta-glucan soluble fiber from whole oats and the level of reduction in blood total- and LDL-cholesterol, and that intakes of beta-glucan soluble fiber at or above 3 gram (g) per day were more effective in lowering serum lipids than lower intake levels (62 FR 3584 at 3585). As such, we concluded that, rather than oat bran and rolled oats, the appropriate substance for the subject of the authorized claim is beta-glucan soluble fiber from whole oats. We further determined that the relationship is scientifically valid in that there is significant scientific agreement, based on the totality of publicly available evidence, that beta-glucan soluble fiber from whole oats, as part of a diet low in saturated fat and cholesterol, may reduce the risk of CHD (62 FR 3584 at 3598).

Several comments to the oats proposed rule suggested that products containing whole oat flour made from 100 percent oat groats also should be eligible to bear the health claim (62 FR 3584 at 3585). The reasons given included: (1) Whole oat flour contains beta-glucan soluble fiber as does oat bran and rolled oats; (2) whole oat flour is derived from the same starting material as rolled oats (i.e., whole oat groats) and, other than the smaller particle size of whole oat flour, whole oat flour possesses a chemical and physical composition virtually identical to that of rolled oats; (3) intestinal content viscosity data from rodent studies demonstrate that whole oat flour beta-glucan soluble fiber retains viscosity similar to that of the beta-glucan soluble fiber from oat bran and rolled oats during processing and digestion; and (4) data from one human clinical study and several experimental animal studies demonstrate that whole oat flour has similar effects on blood cholesterol levels as oat bran and rolled oats (62 FR 3584 at 3585).

We were persuaded that the clinical data showing the positive effects of consuming whole oat flour foods on blood cholesterol, and comments showing compositional similarities between whole oat flour and rolled oats, provided sufficient evidence for us to conclude that whole oat flour has the same effects relative to reduced risk of CHD as do oat bran and rolled oats (62 FR 3584 at 3586). Further, this conclusion was corroborated by evidence from the rodent intestinal contents studies. These studies demonstrate that the beta-glucan soluble fiber from whole oat flour retains the same level of viscosity in the rodent digestive tract as does that from rolled oats (62 FR 3584 at 3586). The whole oats final rule concluded that beta-glucan soluble fiber was the appropriate substance for the subject of the health claim, and that the three eligible sources of this substance were oat bran, rolled oats, and whole oat flour.

D. 1998 Amendment to Broaden the Claim to ''Soluble Fiber From Certain Foods and CHD''

In the soluble fiber from whole oats final rule, we acknowledged the likelihood that consumption of other sources of beta-glucan soluble fiber, as well as other sources and types of soluble fibers, will affect blood lipid levels, and thus, the risk of heart disease (62 FR 3584 at 3587). At that time, FDA considered structuring the final rule as an umbrella regulation authorizing the use of a claim for ''soluble fiber from certain foods'' and risk of CHD. Such action would have allowed flexibility in expanding the claim to other specific food sources of soluble fiber when consumption of those foods has been demonstrated to help reduce the risk of heart disease. However, the agency concluded that it was premature to do so inasmuch as FDA had not reviewed the totality of evidence on other, nonwhole oat sources of soluble fiber (62 FR 3584 at 3588). In 1998, FDA announced that, in response to a health claim petition and on the totality of the available scientific evidence, it had concluded that soluble fiber from psyllium seed husk, similar to beta-glucan soluble fiber from whole oats, may reduce the risk of CHD by lowering blood cholesterol levels (63 FR 8103, February 18, 1998). In that action, FDA broadened § 101.81 to include soluble fiber from psyllium seed husk, and also modified the heading in § 101.81 from, ''* * * Soluble fiber from whole oats and risk of coronary heart disease'' to ''* * * Soluble fiber from certain foods and risk of coronary heart disease (CHD).''

II. Petition To Amend § 101.81 by Adding an Additional Eligible Source of Beta-Glucan Soluble Fiber From Whole Oats

A. Background

The Quaker Oats Co. and Rhodia, Inc. (the petitioners), jointly submitted a health claim petition to FDA on April 21, 2001, under section 403(r)(4) of the Federal Food, Drug, and Cosmetic Act (the act) (21 U.S.C. 343(r)(4)). The petition requested that the agency amend the ''Soluble fiber from certain foods and coronary heart disease health claim'' at § 101.81 to include a fourth source of beta-glucan soluble fiber eligible for the claim. The petitioners requested that this amendment be made ''* * * with specific reference to the Quaker-Rhodia group Oatrim, known as Oatrim (BETATRIM).'' The petition notes that ''[n]ot all Oatrims have been tested for cholesterol-lowering efficacy; hence we are limiting our petition to the subgroup Oatrim (BETATRIM), Oatrims with demonstrated cholesterol-lowering efficacy'' (Ref. 1). FDA filed the petition for comprehensive review in accordance with section 403(r)(4) of the act on July 20, 2001 (Ref. 2).

The petitioners' description of the substance that is the subject of the health claim is broader than what the available evidence supports. We have determined that the evidence supports specifying the substance that is the subject of the claim as the beta-glucan-containing soluble fraction of alpha-amylase hydrolyzed oat bran or whole oat flour with a beta-glucan soluble fiber content up to 10 percent (dwb) and not less than that of the starting material (dwb), also known as oatrim (Ref. 3). This oatrim substance is produced by the methods described by Inglett and Newman, 1994 (Ref. 3). In brief, the manufacturing method consists of first preparing a 10 to 40 percent slurry of a milled oat product (specifically, oat bran or whole oat flour) in water containing 25 to 50 parts per million calcium to stabilize the subsequently added alpha-amylase enzyme, and with a pH adjusted between 5.5 and 7.5. Then the starch of the oat product is liquefied by adding a thermostable alpha-amylase enzyme and processing at a temperature (70 to 100 °C) and time (10 to 60 minutes) determined by the desired product properties. After completion of the enzymatic hydrolysis of the starch, the enzyme is inactivated and the water-soluble fraction consisting of soluble oat fiber and maltooligosaccharides is separated from the water-insoluble residue by centrifugation (Ref. 3). For brevity, we will refer to this substance as oatrim, which is the substance that is the subject of the claim in this interim final rule. Oatrim was developed by George Inglett, Agriculture Research Service, U.S. Department of Agriculture (USDA) (Ref. 3).

The petition describes the substance that is the subject of the health claim to

be ''oatrim (BETATRIM),'' a source of ''oat beta-glucan soluble fiber and oat starch obtained by enzymatic and/or acid-base hydrolysis of whole oat flour or oat bran.'' Thus, the substance as described by the petition includes, in addition to solubilized beta-glucan-containing oat products produced by the enzymatic hydrolysis method, solubilized beta-glucan-containing oat products produced by an acid-base chemical hydrolysis method. In addition, BETATRIM is the petitioners' brand-name for a group of beta-glucan-containing food ingredients. The petitioners have noted that the products they include under their brand-name are ''oatrims'' processed by either alpha-amylase enzymes or by acid/base hydrolysis, and having a beta-glucan soluble fiber content ranging between 4 and 25 percent. However, as discussed later in this preamble, we are limiting the substance that is the subject of the health claim to the soluble fraction of alpha-amylase hydrolyzed oat bran or whole oat flour with a beta-glucan soluble fiber content of up to 10 percent (dwb) and not less than that of the starting material (dwb).

B. Review of Preliminary Requirements for a Health Claim

1. The Substance Is Associated With a Disease for Which the U.S. Population Is at Risk

CHD continues to be a disease that has a large impact on mortality and morbidity in the general adult U.S. population. As explained in the existing beta-glucan soluble fiber from whole oats health claim (§ 101.81), FDA recognizes the CHD risk reduction benefit resulting from effects on blood total and LDL-cholesterol associated with certain foods that are sources of soluble dietary fiber. While age-adjusted CHD mortality rates in the United States had been steadily decreasing since approximately 1960, recent evidence has suggested that the decline in CHD mortality has slowed (Ref. 4). CVD accounts for more than 900,000 U.S. deaths annually and has been recognized as the dominant cause of death in the United States for at least the last 50 years (Ref. 4). Based on these facts, FDA concludes that, as required in § 101.14(b)(1), CHD is a disease for which the U.S. population is at risk.

2. The Substance Is a Food

Oatrim is to be consumed at ''other than decreased dietary levels,'' and contributes nutritive value when used at a level providing at least 0.75 g beta-glucan soluble fiber per serving, in a variety of food products. The term ''nutritive value'' is defined in § 101.14(a)(3) as ''value in sustaining human existence by such processes as promoting growth, replacing loss of essential nutrients, or providing energy.'' The petitioners provided three examples of food categories (bars, beverages and beverage mixes) in which oatrim could be used as an ingredient at a level providing 0.75 g beta-glucan soluble fiber per serving, the level necessary to justify the claim (Ref. 1, Table 3: Some Uses of Oatrim (BETATRIM)). At this level, oatrim provides nutritive value because it provides a consequential source of calories and soluble fiber. Therefore, the preliminary requirement of § 101.14(b)(3)(i) is satisfied.

3. The Substance Is Safe and Lawful

The petition states that oatrim has been used as a food ingredient in a variety of food products. The petition also notes that oatrim-containing foods including cereals, frozen foods, dairy products, beverages, baked products, mixes, and meat and poultry products have been consumed by the public for a number of years. The agency therefore is satisfied that the substance is a food, food ingredient, or a component of a food ingredient.

The petitioners assert that the basis for safe and lawful use of oatrim in food as a food ingredient, at levels necessary to justify the health claim, is that such food use of oatrim is GRAS (generally recognized as safe) by GRAS self-determination. In addition, the petitioners declare that BETATRIM derived from either oat bran or whole oat flour, and subjected to hydrolysis by treatment with safe and suitable food grade enzymes and/or GRAS listed food grade acids or bases, is GRAS through scientific procedures for use as a fat substitute in a variety of foods. The petitioners also declare that over the last several years, Quaker Oats and Rhodia have sold BETATRIM with a concentration of 4 to 6 percent beta-glucan soluble fiber, which has been incorporated by food manufacturers into a number of foods, including low-fat pancakes, muffins, biscuits, a low-fat, high-fiber nutrition bar, and fat-free frankfurters (Ref. 1). The petitioners submitted documentation of a 1992 GRAS self-determination for oatrim by The Quaker Oats Co. (Ref. 1, Appendix 3), a 1991 GRAS self-determination for oatrim by ConAgra (Ref. 1, Appendix 4), and an individual opinion regarding the GRAS status of purified forms of beta-glucan soluble fiber from oats (Ref. 1, Appendix 5) as evidence that oatrim meets the safe and lawful requirement.

The 1992 Quaker Oats Co. documentation of GRAS self-determination (Ref. 1, Appendix 3) characterized oatrim as the water soluble, partially enzymatically hydrolyzed starch fraction of whole oat flour. Oatrim was described as representing about 60 percent of the whole oat flour starting material, and containing 4 to 6 percent beta-glucan soluble fiber and 6.9 percent total dietary fiber. The Quaker Oats Co. determined that the use of oatrim as a fat replacer in fresh ground and processed meats and poultry products, salad dressings, baked goods, baking mixes, processed cheese, yogurt, ice cream and frozen desserts, snack foods, vegetable oil spreads, icings and frostings, frozen entrees, and confections was GRAS. The basis of the safety determination was the similarity of oatrim to oat starch and maltodextrin, two food ingredients that are generally recognized as safe for food use.

The 1991 ConAgra Specialty Grain Products Co. documentation of GRAS self-determination (Ref. 1, Appendix 4) characterized the processing of oatrim as ''oat flour or oat bran that is pre-gelatinized and enzyme thinned, by alpha-amylase, to facilitate separation and recovery of the soluble fraction.'' It noted that the basis of the safety determination was the similarity of oatrim to other existing cereal adjuncts, such as pre-cooked flours, pre-cooked bran, and starches.

The petitioners also submitted a letter from Joseph F. Borzelleca, Consultative Services, Medical College of Virginia & Toxicology and Pharmacology, Inc. (Ref. 1, Appendix 5), stating his opinion that beta-glucan soluble fiber extracted from oat bran or oat flour through enzymatic or by acid/base hydrolysis and containing a maximum concentration of beta-glucan of 25 percent is GRAS when used as a water-binder, humectant, or texture modifier. However, the substance that is the subject of this opinion letter is beta-glucan soluble fiber; the letter mentions neither oatrim nor BETATRIM, and does not describe a manufacturing process that would identify clearly the subject of the letter as oatrim.

The documentation of GRAS self-determination (Ref. 1, Appendices 3 and 4) includes oatrim produced by alpha-amylase hydrolysis and with a beta-glucan content of up to approximately 10 percent. The petition suggests that the Borzelleca Consultative Services' opinion on the GRAS status of beta-glucan soluble fiber extends to the petitioners' BETATRIM products that are manufactured by hydrolysis with

suitable acids or bases and that have a beta-glucan content of up to 25 percent.

FDA is not challenging the petitioners' determination that the beta-glucan-containing soluble fraction of hydrolyzed oat bran or whole oat flour produced by treatment with either alpha-amylase enzymes or with suitable acids or bases is GRAS. However, the scientific evidence submitted, as discussed in section III of this document, only supports a relationship between oatrim, i.e., the soluble fraction of alpha-amylase hydrolyzed oat bran or whole oat flour with beta-glucan soluble fiber content up to 10 percent (dwb) and not less than that of the starting material (dwb), and a reduced risk of CHD. The substance that is the subject of this health claim does not include the soluble fraction of hydrolyzed oat bran or whole oat flour solubilized by acids or bases or containing a beta-glucan content of over 10 percent or with less beta-glucan than that of the starting material. FDA has evaluated the petitioner's position that the use of oatrim at a level providing 0.75 g beta-glucan soluble fiber per serving is safe and lawful. Based on its review, FDA concludes that the petitioners have satisfied the preliminary requirement of § 101.14(b)(3)(ii) to demonstrate, to FDA's satisfaction, that the use of oatrim, as described previously, is safe and lawful as a food ingredient at levels necessary to justify a claim (Ref. 5).

The agency has not made its own determination regarding the GRAS status of either oatrim or other BETATRIM products. Moreover, an agency determination of the GRAS status of these other BETATRIM products would not be relevant to the substance that we are authorizing for this health claim, i.e., oatrim, because such BETATRIM is different from the oatrim that is the subject of this health claim and there is insufficient evidence before the agency to support a finding on the relationship between these other BETATRIM products and a reduced risk of CHD. The agency notes that authorization of a health claim for a substance should not be interpreted as affirmation that the substance is GRAS.

III. Review of Scientific Evidence of the Substance-Disease Relationship

A. Basis for Evaluating the Relationship Between Oatrim and CHD

As previously noted, in the 1997 soluble fiber from whole oats final rule the agency was persuaded that whole oat flour has the same effects relative to reduced risk of CHD as do oat bran and rolled oats. The agency based its conclusion on: (1) Data from a clinical study and several experimental animal studies demonstrating that consumption of whole oat flour had similar effects on blood cholesterol levels as does consumption of oat bran or rolled oats and (2) compositional similarities between whole oat flour and rolled oats (62 FR 3584 at 3586). This conclusion was corroborated by evidence that the beta-glucan soluble fiber from whole oat flour retains the same level of viscosity in the digestive tract as does that from rolled oats. Accordingly, the soluble fiber from whole oats final rule included whole oat flour, along with oat bran and rolled oats, as eligible sources of beta-glucan soluble fiber for the health claim. We now are applying those same criteria to evaluate the petitioned request to add oatrim and other BETATRIM products to the sources of beta-glucan soluble fiber listed in § 101.81(c)(2)(ii)(A).

B. Review of Scientific Evidence of the Substance-Disease Relationship

1. Scientific Evidence of Efficacy in Cholesterol Reduction

a. *Human serum lipid studies of oatrim.* The criteria that the agency used to identify studies pertinent to the current review were the same as those previously used when reviewing evidence supporting the relationship between reduced risk of CHD and consumption of soluble fiber from whole oat products (61 FR 296 at 298) and consumption of psyllium husk soluble fiber (62 FR 28234 at 28237, May 22, 1997). These criteria are: (1) Include an adequate presentation of data, study design, and methods; (2) be available in English; (3) include estimates, or enough information to estimate, soluble dietary fiber intakes; (4) include direct measurement of blood total cholesterol and other blood lipids related to CHD; and (5) be conducted in persons who represent the general U.S. population. Further, factors that exclude human studies from review are: (1) Reports published only in abstract form, (2) studies using special population groups, and (3) secondary prevention studies (i.e., subjects who already have had a myocardial infarction). In addition, in this current evaluation of the relationship between beta-glucan soluble fiber from oatrim and reduced risk of CHD, the agency has included only those studies in which the substance tested was identified to be oatrim or other BETATRIM products.

Reports of five human clinical studies with data on serum lipids were submitted with this petition (Refs. 6 to 10). The study of Braaten et al., 1994 (Ref. 7) and that of Beer et al., 1995 (Ref. 8) both investigated the effects of oat gum on serum cholesterol levels in humans. The study of Torronen et al., 1992 (Ref. 6) and that of Pick et al., 1996 (Ref. 9) both investigated the effects of oat bran concentrate products on serum cholesterol levels in humans. While oat gums and oat bran concentrate are sources of oat beta-glucan soluble fiber, the subject of the petition is oatrim and other BETATRIM products, the beta-glucan-containing soluble fraction from hydrolyzed oat bran or whole oat flour. Neither oat gum nor oat bran concentrates are produced through an extraction process analogous to the process for producing oatrim. As none of these four studies utilized the substance that is the subject of the petition, they were not relevant to the present consideration and were excluded from review.

The study reported in Behall et al., 1997 (Ref. 10) investigated the effects on blood lipids of adding an oat fiber extract, identified as the oatrim developed by George Inglett, Agriculture Research Service, USDA, to diets of mildly hypercholesterolemic subjects. The oat fiber extracts had either 1.6 percent or 10.2 percent by weight beta-glucan soluble fiber (low beta-glucan and high beta-glucan, respectively). Both oat fiber extracts (high and low) were provided by Quaker Oats Co. and by ConAgra, Inc. The petitioners comment in the petition that all of the oatrim that was used in this study had been processed by the enzymatic methods licensed from George Inglett. The oat fiber extracts were added to test diets, replacing 5 percent of the fat energy with a corresponding amount of carbohydrate energy, resulting in beta-glucan soluble fiber consumption of approximately 0.8 g/day (maintenance diet, no oat fiber extract addition), 1.6 to 2.0 g/day (low beta-glucan extract added), or 5.1 to 7.6 g/day (high beta-glucan extract added). The oat fiber extracts were added to the diet in several foods including fruit juice, applesauce, muffins, cookies, cake, brownies, waffles, gelatin, yogurt, spaghetti sauce and meat loaf. The study included 23 mildly hypercholesterolemic adult subjects (age 38 to 61 years) (mean serum total-cholesterol 212 ± 7 mmole/dL; mean LDL-cholesterol 141 ± 6 mmole/dL). The maintenance diet was fed for 1 week followed by diets containing one of the oat fiber extracts for two 5-week periods in a crossover pattern. In comparison to basal serum lipid levels measured following the initial maintenance diet week, serum total-cholesterol was statistically significantly lower ($p < 0.05$) by 9.5 percent (low beta-glucan

extract) and by 14.8 percent (high beta-glucan extract) following the oat fiber extract supplemented diet periods. The mean serum total-cholesterol levels were also statistically different ($p < 0.05$) between the two beta-glucan extract-supplemented diet periods. Likewise, for oat fiber extract-supplemented diets, statistically significant decreases ($p < 0.05$) of serum LDL-cholesterol levels of 14.8 percent (low beta-glucan extract) and by 20.8 percent (high beta-glucan extract) were observed, compared to the maintenance diet period. Serum LDL-cholesterol levels were not significantly different between the two oat fiber extract-supplemented diets. Serum HDL-cholesterol levels were not significantly different among the maintenance, low beta-glucan, or high beta-glucan diet periods.

The results of Behall et al., 1997 (Ref. 10), the only available study that evaluated the effects of oatrim on human serum lipid levels, demonstrate that consumption of a variety of foods containing oatrim produced by the enzymatic method, in amounts providing sufficient beta-glucan soluble fiber to qualify for the health claim, may contribute to statistically significant reductions in serum total- and LDL-cholesterol levels. Further, there appears to be a positive dose-response of the amount of beta-glucan soluble fiber from oatrim and the beneficial effect on serum total cholesterol.

b. *Animal serum lipid studies of oatrim.* The petition included reports from nine studies that investigated the effects of processed oat bran products on cholesterol metabolism in experimental animal models (Refs. 3, and 11 to 18). Among these were studies in which the oat products tested were oat gums (Refs. 11, 12, 14, and 15) or processed oat bran concentrate (Refs. 13 and 17). Results from these six studies were not directly relevant to the consideration of oatrim or other BETATRIM products as a source of beta-glucan soluble fiber eligible for the health claim, and were thus excluded from review. Three of the nine studies investigated effects of oatrim products on blood cholesterol level in experimental animals (Refs. 3, 16, and 18). Preliminary data from Inglett and Newman 1994 (Ref. 3) suggested reductions of plasma total- and LDL-cholesterol associated with the addition of oatrim containing 10-percent beta-glucan to the diet in a hypercholesterolemic chick model. These results were confirmed by Inglett et al., 1994 (Ref. 16) in a followup study with a larger sample of chicks and with an oatrim containing 8.6-percent beta-glucan. Oatrim did not affect plasma HDL-cholesterol levels in either of the above two studies (Refs. 3 and 16).

Yokoyama et al., 1998 (Ref. 18) reported on the effects of oatrim on cholesterol levels in a hypercholesterolemic hamster model. The hamster diets were supplemented with one of four oat flour products, or with cellulose. The oat flour products included a beta-glucan-enriched oat flour, a 5-percent beta-glucan oatrim, a 10-percent beta-glucan oatrim, and a beta-glucan-free hydrolyzed oatrim. All diets, except for the cellulose control and the beta-glucan-free hydrolyzed oatrim, contained equivalent amounts of beta-glucan. The two oatrim-containing diets and the beta-glucan-free oatrim hydrolyzate diet, were effective in showing statistically significant decreases ($p < 0.05$) in plasma total- and LDL-cholesterol levels relative to that of the cellulose-containing diet. The beta-glucan enriched oat flour-containing diet reduced neither plasma total- nor LDL-cholesterol levels. Statistically significant reductions ($p < 0.05$) in the plasma HDL-cholesterol level, relative to that of the cellulose-containing control diet, occurred with the two oatrim-containing diets and with the enriched oat flour-containing diet, but not with the oatrim hydrolyzate-containing diet.

Consistent with the clinical study, data from three animal models corroborate the finding that oatrim products containing beta-glucan soluble fiber lower blood total- and LDL-cholesterol levels. Furthermore, with the exception of the study employing a hamster model (Ref. 18), HDL-cholesterol levels were not significantly altered.

2. Composition of Oatrim Relative to Whole Oat Products

As discussed previously, a key factor in our decision to add whole oat flour to the food sources of beta-glucan soluble fiber eligible for the health claim was evidence that, other than being milled to a smaller particle size, the composition of whole oat flour and rolled oats is the same (62 FR 3584 at 3586). Oat bran differs from whole oat flour in that a portion of the starch-rich endosperm of whole oat flour has been removed whereas the outer soluble fiber-rich layers of the oat groat are retained. Although oatrim is derived from two of the same eligible food sources of beta-glucan soluble fiber currently authorized for the health claim, i.e., whole oat flour and oat bran, the composition of oatrim differs from each. Oatrim differs from oat bran and whole oat flour in that, in the manufacturing of oatrim, much of the starch present in the whole oat flour or remaining in the oat bran has been converted to soluble amylodextrins, and nonwater soluble components of the starting milled oat products are removed by centrifugation. However, like oat bran, the oatrim fraction produced from the manufacturing methods of Inglett and Newman, 1994 (Ref. 3) retains most of the beta-glucan soluble fiber and fiber-associated substances found in whole oat products.

3. Rat Intestinal Viscosity Studies

As explained in the soluble fiber from whole oats final rule, the viscosity of intestinal contents is known to be a critical factor in the ability of soluble dietary fiber to reduce the risk of CHD, and soluble dietary fiber viscosity is affected in unpredictable ways by food processing, or following ingestion, by the digestive system (62 FR 3584 at 3586). Therefore, evidence demonstrating that the level of viscosity in the digestive tract of the beta-glucan-containing oatrim is similar to the level of viscosity of rolled oats, oat bran, and whole oat flour is an important factor in our decision to add oatrim as an additional source of oat beta-glucan soluble fiber eligible for the health claim. As noted in the soluble fiber from whole oats final rule (62 FR 3584 at 3587), there are no generally accepted or validated criteria for predicting which sources or processed forms of beta-glucan soluble fiber beyond oat bran, rolled oats, and whole oat flour are capable of reducing blood total- and LDL-cholesterol levels. Therefore, FDA must evaluate data that are relevant to each source of beta-glucan soluble fiber and compare these data to other authorized sources. FDA considered evidence demonstrating that the processed sources of beta-glucan soluble fiber retain the same level of viscosity in the digestive tract as soluble fiber from rolled oats to determine whether the processed forms can provide the same benefits as rolled oats (62 FR 3584 at 3586).

The petitioners submitted results of animal tests to show that beta-glucan soluble fiber from oatrim or other BETATRIM products retains the viscosity characteristics of soluble fiber in whole oat products (rolled oats, oat bran, and whole oat flour) in the rodent digestive tract (Refs. 19 to 22). Gallaher et al., 1999 (Ref. 21) reported data on rat intestinal contents supernatant viscosity (ICSV) resulting from rats consuming an oat product meal. Rats that had been fasted overnight were meal-fed a whole oat-based cereal (Cheerios, cooked and uncooked oatmeal, or cooked oat bran).

Two hours later, the intestinal contents were collected, then centrifuged, and the viscosities of the resultant supernatants were determined. Differences in resultant mean ICSV values among the whole oat-based cereals tested were not statistically significant ($p > 0.05$). Gallaher et al., 1999 (Ref. 21) did not report data regarding the beta-glucan content of the whole oat-based cereals tested; however, based on information provided in the study report we have estimated that the whole oat-based cereal test meals contained approximately 0.12 g (Cheerios) to 0.22 g (oat bran) of beta-glucan per meal.

The ICSV data from Gallaher et al., 1999 (Ref. 21) were subsequently compared to ICSV data for the petitioners' enzymatically processed BETATRIM, also tested by Gallaher under the same test protocol (Ref. 22). The BETATRIM tested included a 4-percent beta-glucan BETATRIM, a 20-percent beta-glucan BETATRIM, and a blend of the two containing 12-percent beta-glucan. The petition identified the BETATRIM products used in this study as all having been produced with the alpha-amylase process. These test meals provided between 0.02 g and 0.10 g beta-glucan per meal. The blended 12-percent beta-glucan test meal (0.06 g beta-glucan/meal) yielded a mean ICSV value comparable to that of 0.12 to 0.22 g beta-glucan/meal from whole oat-based cereals. The mean ICSV value resulting from the high beta-glucan BETATRIM (0.10 g beta-glucan/meal) was approximately four times greater than that of 0.12 to 0.22 g beta-glucan/meal from whole oat-based cereals. These data indicate that the enzymatic processing of whole oat products into BETATRIM, and the subsequent digestion in the rat gastrointestinal tract, do not degrade the viscosity of oat beta-glucan soluble fiber relative to that of whole oat products.

The petitioners provided a report of a third viscosity study that was conducted to compare the viscosity of BETATRIM processed by the acid/base chemical method to that of BETATRIM enzymatically processed (Ref. 22). This viscosity study was conducted with the same test protocol as before, and using two sources of 20-percent beta-glucan content BETATRIM, one enzymatically processed and the other acid/base processed. The mean ICSV values for the two sources of 20-percent beta-glucan content BETATRIM were not statistically significantly different and were comparable to that of the previous study. No data were provided with respect to comparative ICSV values of enzymatic and acid/base processed BETATRIM products with beta-glucan content less than 20 percent.

The ICSV data demonstrate that the viscosity characteristics of beta-glucan soluble fiber in intact whole oat products is not degraded in the beta-glucan-containing soluble fraction of alpha-amylase hydrolyzed whole oat products. Further, the type of hydrolysis treatment, alpha-amylase enzymatic or acid/base, does not appear to have an effect on viscosity characteristics in products with beta-glucan content of 20 percent.

C. Physiochemical Properties

As noted previously, there are no generally accepted or validated criteria for predicting which sources or processed forms of beta-glucan soluble fiber are capable of reducing blood LDL-cholesterol, and therefore have an effect on CHD risk. Comments to the original soluble fiber from the whole oats proposed rule (62 FR 3584 at 3591) suggested that the effect on blood lipids from consumption of beta-glucan soluble fiber is related to both the molecular weight and the solution viscosity of the beta-glucan. The comments stated that processing methods can alter the molecular structure of the beta-glucan molecule and may cause it to lose its effect on blood cholesterol levels. The comments suggested that to ensure that the processed oat-containing food product will provide the effects associated with beta-glucan soluble fiber in the starting material, i.e., oat bran, rolled oats, and whole oat flour, the finished oat product should be tested to determine whether its beta-glucan soluble fiber has retained the physical properties, such as molecular weight, that it had in the starting material. FDA was not convinced, at the time of our initial soluble fiber from whole oats and CHD risk health claim rulemaking, that there was a need to require molecular weight or viscosity testing of foods containing oat bran, rolled oats, or whole oat flour. Although processing of whole oat substances could result in extensive depolymerization of the beta-glucan, there was clinical evidence demonstrating that most oat bran or rolled oats products processed as ready-to-eat cereals, muffins, breads, or other foods, whether they were consumed hot or cold, were effective in significantly lowering blood lipids when consumed as part of an appropriate diet.

Some studies failed to find blood lipid lowering effectiveness associated with consumption of highly processed oat gum extracts, but such studies were not relevant to FDA's analysis because FDA was authorizing the health claim for whole oat products only. As we are now proposing to extend eligible beta-glucan sources to include a processed extract of oat bran and whole oat flour, we also need to reconsider the utility of physiochemical measures of the beta-glucan soluble fiber sources that would be predictive of effectiveness in lowering blood lipids. However, we are unaware of clinical data that establish a direct correlation of any physiochemical measures (e.g., molecular weight, or viscosity) and of beta-glucan soluble fiber sources and effects on blood lipids.

Viscosity data from the ex vivo rat intestinal model of Gallaher et al. (Ref. 21) have been considered as corroborating evidence that the processing of whole oat flour or of oatrim does not significantly affect viscosity properties of the whole oat starting material from which it is made. However, we have no direct clinical evidence demonstrating the applicability of this model to predicting blood lipid-lowering effect in humans. Further, there are many methods of measuring the complex viscosity properties and the result is dependent upon the conditions of measurement. Although we do not recognize a standard method for measuring soluble viscosity applicable to a range of conditions, we do accept that soluble fiber viscosity is a major physiochemical property responsible for physiological effects of consuming soluble fiber, e.g., lowering blood lipids, and that viscosity is related to polymer size of the soluble fiber. For example, a study of viscosity as a variable in effectiveness of beta-glucan in altering blood glucose and insulin responses to an oral glucose load (Ref. 23) found a significant correlation between peak blood glucose and a combination of beta-glucan concentration and molecular weight. The agency is requesting comment and scientific data on the potential of using a molecular weight or other physiochemical properties as a predictive parameter of the ability of beta-glucan soluble fiber from highly processed sources to be effective in lowering blood lipids.

Lacking direct evidence correlating physicochemical properties of a substance with cholesterol-lowering efficacy in humans, we continue to rely on clinical intervention studies demonstrating effectiveness of a beta-glucan source in LDL-cholesterol reduction when we authorize additional eligible sources of beta-glucan soluble fiber. For this health claim, we were able to determine that a beta-glucan source from oat bran or whole oat flour (the starting materials), combined with limitations on the manufacturing

process (the alpha-amylase process used to manufacture the oatrim substance tested by Behall et al. (Ref. 10)) and on the beta-glucan content of the finished product, are sufficient to ensure an adequate description of the substance that is the subject of this claim. The substance that is the subject of the claim, i.e. oatrim, is that which was used in the Behall et al. study (Ref. 10) that demonstrated a reduction in risk of CHD. Parties considering variations of the processing method used to produce the oatrim used in the Behall et al. clinical trial (Ref. 10) would need to demonstrate the bioequivalence in cholesterol reduction of their products to those oat beta-glucan sources listed in § 101.81(c)(2)(ii)(A), and submit these data to FDA in a petition to amend the health claim regulation to include such processing variations in the definition of oatrim.

IV. Decision To Amend the Health Claim: Soluble Fiber From Whole Oats and Reduced Risk of CHD to Include Oatrim as an Eligible Source of Oat Beta-Glucan Soluble Fiber

Results from Behall et al., 1997 (Ref. 10) indicate that, like the effects of consuming rolled oats, oat bran, and whole oat flour, the beta-glucan-containing soluble fraction from alpha-amylase hydrolyzed oat bran and whole oat flour with a beta-glucan soluble fiber content up to 10 percent is effective in reducing blood total- and LDL-cholesterol levels, which in turn may reduce the risk of heart disease. Three studies employing various animal models also demonstrate a relationship between consumption of oatrim and a reduction in cholesterol levels. Furthermore, results from an experimental animal model of intestinal viscosity indicate that oatrim yields intestinal contents supernatant viscosity similar to that of beta-glucan soluble fiber in whole oat products. These data provide evidence of a physiological equivalence of beta-glucan soluble fiber from oatrim and beta-glucan soluble fiber from whole oat sources such as oat bran and rolled oats. Thus, these data support FDA's previous determination that, based on the totality of publicly available evidence, there is significant scientific agreement that a relationship exists between consumption of certain beta-glucan soluble fiber sources and reduced risk of CHD.

The petition requested that the amendment specifically reference Quaker-Rhodia BETATRIM brand-name products because they are the only sources with demonstrated blood cholesterol-lowering efficacy and retention of the whole oat product viscosity characteristics. We note, however, that the substance tested in the clinical cholesterol-lowering efficacy study, i.e., alpha-amylase hydrolyzed oat bran or whole oat flour, with not more than 10 percent beta-glucan content, was manufactured both by the Quaker Oats Co. and by ConAgra, Inc. Because the data upon which this health claim is based is not limited to petitioners' brand name products, FDA will not limit the health claim to these products. Instead, the health claim will be available to any substances that meet FDA's definition of oatrim, as specified previously.

Moreover, the substance tested in the clinical cholesterol-lowering efficacy study did not include acid-base hydrolyzed products or products with beta-glucan content exceeding 10 percent. Therefore, as previously discussed, the agency is not including substances other than oatrim, defined as the beta-glucan containing soluble fraction from alpha-amylase hydrolyzed oat bran or whole oat flour with a beta-glucan soluble fiber content up to 10 percent (dwb) and not less than that of the starting material (dwb), as an eligible source of beta-glucan for this health claim. Based on the information before us, we are persuaded that the clinical evidence of positive effects on blood cholesterol of consuming this oatrim substance, provides sufficient evidence for the agency to conclude that oatrim has the same effects relative to reduced risk of CHD as do rolled oats, oat bran and whole oat flour. Further, this conclusion is corroborated by evidence from rat intestinal contents studies that demonstrate that processing of such oatrim does not degrade the viscosity characteristics of beta-glucan soluble fiber relative to the viscosity characteristics of the whole oat sources from which it is produced. The available clinical study demonstrated efficacy of oatrim on reducing serum cholesterol with oatrim added to the diet by incorporating it into a variety of foods including fruit juice, applesauce, muffins, cookies, cake, brownies, waffles, gelatin, yogurt, spaghetti sauce, and meat loaf. These foods cover a range of viscosities, densities, and textures (Ref. 10). The foods were functional, and the petitioners did not note any matrix effects on beta-glucan availability. Therefore, we conclude that the health claim for oatrim need not be restricted to any particular food category or type (Ref. 5).

In conclusion, we find that there is sufficient evidence to amend § 101.81(c)(2)(ii)(A) by adding the beta-glucan-containing soluble fraction from alpha-amylase hydrolyzed oat bran or whole oat flour with a beta-glucan content up to 10 percent (dwb) and not less than that of the starting material (dwb) as the fourth source of beta-glucan soluble fiber. We are not restricting the eligible substance to the Quaker-Rhodia BETATRIM brand-name, so that all foods that meet the eligibility requirements for oatrim under § 101.81 may use the claim. To this end, we are amending § 101.81, as discussed in section V of this document, to include beta-glucan soluble fiber from oatrim.

We have also concluded that there is insufficient evidence at this time to include beta-glucan-containing acid/base hydrolyzed oat products as a substance eligible for the health claim. Although there are direct clinical data and corroborating animal plasma lipids and viscosity data to support addition of oatrim with a beta-glucan content up to 10 percent, the only available data regarding hydrolyzed oat bran or whole oat flour with a beta-glucan content over 10 percent and that is manufactured using acid/base hydrolysis, are from a single experiment comparing viscosity of two oat products containing 20-percent beta-glucan. In one oat product, the hydrolysis treatment was alpha-amylase; in the other oat product, the hydrolysis treatment was acid/base (Ref. 22). In section II.B.3 of this document, we discussed whether oatrim used at levels necessary to justify a claim has been demonstrated to be a safe and lawful substance. FDA is not challenging the petitioners' contention that BETATRIM products produced from oat bran and whole oat flour treated with either alpha-amylase, or suitable acids or bases, and containing up to 25-percent beta-glucan, are GRAS. Hence, our decision not to include hydrolyzed oat products with a beta-glucan content of more than 10 percent and beta-glucan-containing acid/base hydrolyzed oat products, as substances which may be used in a food to make the food eligible to bear a claim about such sources of soluble fiber and reduced risk of CHD, rests on the lack of sufficient data to demonstrate such a relationship. We will evaluate any clinical data submitted in response to this interim final rule to demonstrate, by validated measures, that a relationship exists between consumption of hydrolyzed oat products with beta-glucan content over 10 percent and of acid/base hydrolyzed oat products and a reduced risk of CHD, to determine whether such data warrant a modification to this rule.

V. Description of Modifications to § 101.81

A. Nature of the Substance; Eligible Sources of Soluble Fiber

Section 101.81(c)(2)(ii) (nature of the substance; eligible sources of soluble fiber) lists the types and sources of soluble fiber that have been demonstrated to FDA's satisfaction to have a relationship to the reduced risk of CHD. Section 101.81(c)(2)(ii)(A) lists beta-glucan soluble fiber from whole oat sources, along with a method of analysis for beta-glucan soluble fiber by the Association of Official Analytical Chemists. Section 101.81(c)(2)(ii)(A)(*1*) through (c)(2)(ii)(A)(*3*) identifies the whole oat products that are eligible sources of beta-glucan, i.e., oat bran, rolled oats, and whole oat flour.

The nature of the substance for which we have concluded there is sufficient evidence to justify its addition to the list of eligible oat sources of beta-glucan is more narrowly circumscribed than that of the BETATRIM products requested by the petitioners. Oatrim, the substance to be added as an eligible oat source of beta-glucan soluble fiber is defined by the specific manufacturing process described by Newman and Inglett, 1994 (Ref. 3), by the limitations on the starting material from which the oatrim is extracted (i.e., oat bran or whole oat flour as defined in § 101.81(c)(2)(ii)(A)), and by the limitations on the beta-glucan content of the finished product (i.e., not less than that of the starting material and not more than 10 percent (dwb)).

In this interim final rule, we are amending § 101.81(c)(2)(ii)(A) by adding § 101.81(c)(2)(ii)(A)(4) which will specify the beta-glucan-containing soluble fraction of alpha-amylase hydrolyzed oat bran and whole oat flour, with a beta-glucan content up to 10 percent (dwb) and not less than that of the starting material (dwb), as a source of beta-glucan soluble fiber eligible to be the subject of this claim. Since the processing of oat bran and whole oat flour into oatrim involves only a liquefaction of starch and separation of insoluble components without alteration of the beta-glucan soluble fiber present in the starting material, we are specifying that the beta-glucan content of the oatrim product is not less than that of the starting material (dwb). New § 101.81(c)(2)(ii)(A)(4) specifies:

Oatrim. The soluble fraction of alpha-amylase hydrolyzed oat bran or whole oat flour, also known as oatrim. Oatrim is produced from either oat bran as defined in paragraph (c)(2)(ii)(A)(*1*) of this section, or whole oat flour as defined in paragraph (c)(2)(ii)(A)(*3*) of this section by solubilization of the starch in the starting material with an alpha-amylase hydrolysis process, and then removal by centrifugation of the insoluble components consisting of a high portion of protein, lipid, insoluble dietary fiber, and the majority of the flavor and color components of the starting material. Oatrim shall have a beta-glucan soluble fiber content up to 10 percent (dwb) and not less than that of the starting material (dwb).

B. Nature of the Food Eligible to Bear the Claim

Section 101.81(c)(2)(iii)(A)(*1*) currently specifies that a food eligible to bear the health claim shall include one or more of the whole oat foods from paragraph (c)(2)(ii)(A) of this section (i.e., oat bran, rolled oats, whole oat flour), and that the whole oat food shall contain at least 0.75 g of soluble fiber per reference amount customarily consumed of the food product. We are concerned that expanding the eligible sources of beta-glucan soluble fiber from the current three whole oat sources to include oatrim, which is an extract of whole oat sources and has a character more as a food ingredient than as a whole oat food, may render current paragraph (c)(2)(iii)(A)(*1*) open to different interpretations as to the contribution of soluble fiber from oatrim-containing foods to meet the 0.75 g requirement. Oatrim-containing foods could contain sources of soluble dietary fiber other than oatrim. Although such foods may meet the criteria in § 101.81(c)(2)(iii)(A)(*1*) to bear the health claim (e.g., include a whole oat product listed in paragraph (c)(2)(ii)(A) and contain at least 0.75 g of soluble fiber), they would not necessarily contain sufficient beta-glucan soluble fiber from the oatrim ingredient to contribute in a meaningful way to the 3 g or more per day of beta-glucan fiber from whole oats necessary to reduce the risk of CHD.

The ''Nature of the Food'' section of the whole oats health claim originally was worded: ''The food shall contain at least 0.75 gram (g) per reference amount customarily consumed of whole oat soluble fiber from the eligible sources listed in paragraph (c)(2)(ii) of this section * * *''

However, when proposing to amend this regulation to broaden the health claim to the proposed rule on ''Soluble Fiber from Certain Foods and CHD'' and to add psyllium seed husk as an additional source of soluble dietary fiber eligible for the claim (62 FR 28234, May 22, 1997) the wording of § 101.81(c)(2)(iii)(A) was unintentionally changed to the present form that requires ''* * * 0.75 gram (g) of soluble fiber per reference amount customarily consumed of the food product * * *'' The phrase used initially, ''whole oat soluble fiber,'' was intended to mean beta-glucan soluble fiber from whole oats (62 FR 3584 at 3588). This was based on information that the soluble fiber content of whole oats is predominantly (approximately 87 percent or more) beta-glucan. Thus, the total soluble fiber content of whole oats significantly reflects the beta-glucan present. Moreover, the agency thought the term ''soluble fiber'' would be more familiar to consumers than ''beta-glucan,'' because soluble fiber can be declared on the nutrition label; whereas, beta-glucan is a technical term that may not be widely understood. However, because of the possibility that oatrim-containing foods bearing the health claim could have insufficient amounts of beta-glucan, the specific type of soluble fiber that is the subject of this interim final rule, FDA is redesignating current § 101.81(c)(2)(iii)(A)(*2*), and adding new paragraph (c)(2)(iii)(A)(*2*) specifying that the oatrim-containing food bearing the health claim contain at least 0.75 g of beta-glucan per reference amount customarily consumed. FDA also is specifying that current paragraph (c)(2)(iii)(A)(*1*) refer to the three oat products previously authorized (i.e., oat bran, rolled oats, and whole oat flour).

In addition, FDA intends to consider in a future separate rulemaking the advisability of amending paragraph § 101.81(c)(2)(iii)(A)(*1*) to clarify that any food eligible for the health claim on the basis of containing a whole oat food must contain at least 0.75 g of beta-glucan soluble fiber from the whole oat source rather than 0.75 g of soluble fiber of unspecified type.

C. Other Requirements

All other requirements in § 101.81(c)(1) through (c)(2)(i) must be met before any health claim involving an oatrim-containing product can be utilized. FDA is providing that any or all of the optional information in § 101.81(d) may apply to oatrim.

D. Model Health Claims

This interim final rule to amend existing § 101.81(c)(2) does not affect the model health claims specified in paragraph (e) of § 101.81.

VI. Issuance of an Interim Final Rule and Immediate Effective Date

We are issuing this rule as an interim final rule, effective immediately, with an opportunity for public comment. Section 403(r)(7) of the act authorizes us to make proposed regulations issued under section 403(r) of the act effective

upon publication pending consideration of public comment and publication of a final regulation, if the agency determines that such action is necessary. This authority enables us to act promptly on petitions that provide information that is necessary to: (1) Enable consumers to develop and maintain healthy dietary practices, (2) enable consumers to be informed promptly and effectively of important new knowledge regarding nutritional and health benefits of food, or (3) ensure that scientifically sound nutritional and health information is provided to consumers as soon as possible. Interim final regulations made effective upon publication under this authority are deemed to be final agency action for purposes of judicial review. The legislative history indicates that such regulations should be issued as interim final rules (H. Conf. Rept. No. 105–399, at 98 (1997)).

The petitioners have submitted requests for the agency to consider making any proposed regulation on the petitioned health claim effective upon publication of an interim final rule (Ref. 1). We acknowledge that all three of the eligible criteria in section 403(r)(7)(A) of the act have been met in the petition submitted by Quaker Oats and Rhodia, Inc. The health claim will provide consumers with important health information on the package label regarding the role of oatrim products in lowering cholesterol and reducing the risk of heart disease. The health claim also will provide consumers with scientifically sound information on the nutritional and health benefits of foods containing oatrim and will enable consumers to develop and maintain healthy dietary practices that include the incorporation of foods containing hydrolyzed oat products into their diets. Therefore, we are granting petitioners' requests for issuance of an interim final rule for this health claim.

VII. Analysis of Impacts

A. Regulatory Impact Analysis

We have examined the economic implications of this interim final rule as required by Executive Order 12866 and the Regulatory Flexibility Act (5 U.S.C. 601–612), and the Unfunded Mandates Reform Act of 1995. Executive Order 12866 directs agencies to assess all costs and benefits of available regulatory alternatives and, when regulation is necessary, to select regulatory approaches that maximize net benefits (including potential economic, environmental, public health and safety, and other advantages; distributive impacts; and equity). Executive Order 12866 classifies a rule as significant if it meets any one of a number of specified conditions, including: Having an annual effect on the economy of $100 million or more, or adversely affecting in a material way a sector of the economy, competition, or jobs. A regulation also is considered a significant regulatory action if it raises novel legal or policy issues. We have determined that this interim final rule is not a significant regulatory action as defined by Executive Order 12866.

This interim final rule will not generate any compliance costs relative to the status quo, because it does not require anyone to undertake any new activity. No firm will choose to use the claim allowed by this rule unless the firm believes that doing so will increase its profits. Because it specifies the manner in which a health claim can be made in product labeling, this rule imposes restrictions that may lead to social costs compared with alternative requirements for making the claim. The costs of making the claim under the specified requirements, however, would not differ significantly from the costs under plausible alternative requirements.

This interim final rule will generate social benefits because it provides for new information in the market regarding the relationship between soluble fiber and the risk of CHD. We have already authorized a health claim on beta-glucan soluble fiber from certain other whole oat sources and psyllium seed husk as sources of soluble fiber and the risk of CHD. Amending the existing health claim to include oatrim as an eligible source of beta-glucan soluble fiber will allow firms to inform consumers of the benefits of soluble fiber from oatrim. The provisions of this information in this format will signal to consumers that we have found the claim to be truthful, not misleading, and scientifically valid. Because it specifies the conditions under which a health claim can be made, this rule may lead to benefits that are greater or smaller than under alternative requirements for making the claim. The benefits of allowing the relevant claim, however, would not differ significantly from the benefits under plausible alternative requirements.

B. Regulatory Flexibility Analysis

We have examined the economic implications of this interim final rule as required by the Regulatory Flexibility Act (5 U.S.C. 601–612). If a rule has a significant economic impact on a substantial number of small entities, the Regulatory Flexibility Act requires the agency to analyze regulatory options that would minimize the economic impact of the rule on small entities.

As previously explained, this interim final rule will not generate any compliance costs for any small entities, because it does not require small entities to undertake any new activity. No small business will choose to use the soluble fiber from oatrim and CHD claim allowed by this rule unless it believes that doing so will increase its profits. Accordingly, we certify that this interim final rule will not have a significant economic impact on a substantial number of small entities. Under the Regulatory Flexibility Act, no further analysis is required.

C. Unfunded Mandates

Title II of the Unfunded Mandates Reform Act of 1995 (Public Law 104–4) requires cost-benefit and other analyses before any rulemaking if the rule would include a ''Federal Mandate that may result in the expenditure by State, local, and tribal governments, in the aggregate, or by the private sector, of $100,000,000 or more (adjusted annually for inflation) in any 1 year.'' We have determined that this interim final rule does not constitute a significant regulatory action under the Unfunded Mandates Reform Act.

VIII. Environmental Impact

The agency has determined under 21 CFR 25.32(p) that this action is of a type that does not individually or cumulatively have a significant effect on the human environment. Therefore, neither an environmental assessment nor an environmental impact statement is required.

IX. Paperwork Reduction Act

FDA concludes that the labeling provisions of this interim final rule are not subject to review by the Office of Management and Budget because they do not constitute a ''collection of information'' under the Paperwork Reduction Act of 1995 (44 U.S.C. 3501–3520). Rather, the food labeling health claim on the association between oatrim and reduced risk of CHD is a ''public disclosure of information originally supplied by the Federal government to the recipient for the purpose of disclosure to the public'' (5 CFR 1320.3(c)(2)).

X. Federalism

We have analyzed this interim final rule in accordance with the principles set forth in Executive Order 13132. We have determined that the rule does not contain policies that have substantial direct effects on the States, on the relationship between the National

Government and the States, or on the distribution of power and responsibility among the various levels of government. Accordingly, we have concluded that the interim final rule does not contain policies that have federalism implications as defined in the Executive order and consequently, a federalism summary impact statement is not required.

XI. Comments

Interested persons may submit to the Dockets Management Branch (see **ADDRESSES**) written or electronic comments regarding this interim final rule by [see **DATES**]. Two copies of any written comments are to be submitted, except that individuals may submit one copy. Submit one electronic copy. Comments are to be identified with the docket number found in brackets in the heading of this document. Received comments may be seen in the Dockets Management Branch office between 9 a.m. and 4 p.m., Monday through Friday.

XII. References

The following references have been placed on display in the Dockets Management Branch (see **ADDRESSES**) and may be seen by interested persons between 9 a.m. and 4 p.m., Monday through Friday.

1. The Quaker Oats Co. and Rhodia, Inc., ''Oatrim (BetaTrim™) Health Petition,'' HCN1, vol. 1, Docket No. 01Q–0313, April 12, 2001.

2. Letter from Lynn Larsen, Center for Food Safety and Applied Nutrition, FDA, to Priscilla Samuel and Robert Murray, The Quakers Oats Co., Let 1, Docket No. 01Q–0313 and James T. Elfstrum, Rhodia, Inc., Let 2, Docket No. 01Q–0313, July 20, 2001.

3. Inglett, G.E., and R. K. Newman, ''Oat Beta-Glucan-Amylodextrins: Preliminary Preparations and Biological Properties,'' *Plant Foods for Human Nutrition*, 45:53–61, 1994.

4. Cooper, R., J. Cutler, P. Desvigne-Nickens, S. P. Fortmann, L. Friedman, R. Havlik, G. Hogelin, J. Marler, P. McGovern, G. Morosco, L. Mosca, T. Pearson, Jeremiah Stamler, D. Stryer, and T. Thom, ''Trends and Disparities in Coronary Heart Disease, Stroke, and Other Cardiovascular Diseases in the United States. Findings of the National Conference on Cardiovascular Disease Prevention,'' *Circulation*, 102:3137–3147, 2000.

5. Memorandum to the record concerning oatrim beta-glucan health claim petition, prepared by Michael A. Adams, FDA, June 28, 2002.

6. Torronen, R., L. Kansanen, M. Uusitupa, O. Hanninen, O. Myllymaki, H. Harkonen, and Y. Malkki, ''Effects of an Oat Bran Concentrate on Serum Lipids in Free-Living Men with Mild to Moderate Hypercholesterolemia,'' *European Journal of Clinical Nutrition*, 46:621–627, 1992.

7. Braaten, J. T., P. J. Wood, F. W. Scott, M. S. Wolynetz, M. K. Lowe, P. Bradley-White, and M. W. Collins, ''Oat Beta-Glucan Reduces Blood Cholesterol Concentration in Hypercholesterolemic Subjects,'' *European Journal of Clinical Nutrition*, 48:465–474, 1994.

8. Beer, M. U., E. Arrigoni, and R. Amado, ''Effects of Oat Gum on Blood Cholesterol Levels in Healthy Young Men,'' *European Journal of Clinical Nutrition*, 49:517–522, 1995.

9. Pick, M. E., Z. J. Hawrysh, M. I. Gee, E. Toth, M. L. Garg, and R. T. Hardin, ''Oat Bran Concentrate Bread Products Improve Long-Term Control of Diabetes: A Pilot Study,'' *Journal of the American Dietetic Association*, 96:1254–1261, 1996.

10. Behall, K. M., D. J. Scholfield, and J. Hallfrisch, ''Effect of Beta-Glucan Level in Oat Fiber Extracts on Blood Lipids in Men and Women,'' *Journal of the American College of Nutrition*, 16:46–51, 1997.

11. Chen, W.-J. L, J. A. Anderson, and M. R. Gould, ''Effects of Oat Bran, Oat Gum and Pectin on Lipid Metabolism of Cholesterol-Fed Rats,'' *Nutrition Reports International*, 24:1093–1098, 1981.

12. Welch, R. W., D. M. Peterson, and B. Schrmaka, ''Hypocholesterolemic and Gastrointestinal Effects of Oat Bran Fractions in Chick,'' *Nutrition Reports International*, 38:551–561, 1988.

13. Ranhotta, G. S., J. A. Gelroth, K. Astroth, and C. S. Rao, ''Relative Lipidemic, Responses in Rats Fed Oat Bran or Oat Bran Concentrate,'' *Cereal Chemistry*, 67:509–511, 1990.

14. Oda, T., S. Aoe, S. H. Sanda, and Y. Ayano, ''Effects of Soluble Fiber Preparations Isolated from Oat, Barley, and Wheat on Liver Cholesterol Accumulation in Cholesterol-Fed Rats,'' *Journal of Nutritional Science and Vitaminology*,'' 39:73–79, 1993.

15. Oda, T., S. Aoe, S. Imanishi, Y. Kanazawa, H. Sandra, and Y. Ayano, ''Effects of Dietary Oat, Barley, and Guar Gums on Serum and Lipid Concentrations in Diet-Induced Hyper-triglyceridemic Rats,'' *Journal of Nutritional Science and Vitaminology*,'' 40:213–217, 1994.

16. Inglett, G. E., K. Warner, and R. K. Newman, ''Sensory and Nutritional Evaluations of Oatrim,'' *Cereal Foods World*, 39:775–759, 1994.

17. Malkki, Y., K. Pelkon, O. Myllymaki, R. Torronen, O. Hanninen, and K. Syrjanen, ''Effects of Oat Bran Concentrate on Rat Serum Lipids and Liver Fat Infiltration,'' *European Journal of Clinical Nutrition*, 49:S321–S324, 1995.

18. Yokoyama W. H., B. E. Knuckles, A. Stafford, and G. Inglett, ''Raw and Processed Oat Ingredients Lower Plasma Cholesterol in the Hamster,'' *Journal of Food Science*, 63:713–715, 1998.

19. Freiburger, L. M., and D. D. Gallaher, ''Association Between Intestinal Contents Viscosity and Cholesterol Lowering in Rats Fed Fermentable and non-Fermentable Dietary Fibers,''*Federation of American Societies for Experimental Biology Journal*, 14: A291, 2000.

20. Freiburger, L. M., and D. D. Gallaher, ''Mechanism of Cholesterol Lowering in Rats Fermentable and non-Fermentable Dietary Fibers,'' *Federation of American Societies for Experimental Biology Journal*, 15: A290, 2001.

21. Gallaher, D. D., K. J. Wood, C. M. Gallaher, L. F. Marquart, and A. M. Engstrom, ''Intestinal Contents Supernatant Viscosity of Rats Fed Oat-Based Muffins and Cereal Products,'' *Cereal Chemistry*, 76:21–24, 1999.

22. Gallaher, D. D., ''Intestinal Contents Supernatant Viscosity of Rats Meal-Fed Oatrim and Its Cholesterol Lowering Effect in Rats,'' (Sup 1, Docket No. 01Q–0313) 1999.

23. Wood, P. J., M. V. Beer, and G. Butler, ''Evaluation of the Role of Concentration and Molecular Weight of Oat Beta-Glucan in Determining Effect of Viscosity on Plasma Glucose and Insulin Following an Oral Glucose Load,'' *British Journal of Nutrition*, 84:19–23, 2000.

List of Subjects in 21 CFR Part 101

Food labeling, Nutrition, Reporting and recordkeeping requirements.

Therefore, under the Federal Food, Drug, and Cosmetic Act and under authority delegated to the Commissioner of Food and Drugs, 21 CFR part 101 is amended as follows:

PART 101—FOOD LABELING

1. The authority citation for 21 CFR part 101 continues to read as follows:

Authority: 15 U.S.C. 1453, 1454, 1455; 21 U.S.C. 321, 331, 342, 343, 348, 371; 42 U.S.C. 243, 264, 271.

2. Section 101.81 is amended by adding paragraph (c)(2)(ii)(A)(*4*), by revising paragraph (c)(2)(iii)(A)(*1*), by redesignating paragraph (c)(2)(iii)(A)(*2*) as paragraph (c)(2)(iii)(A)(*3*), and by adding new paragraph (c)(2)(iii)(A)(*2*) to read as follows:

§ 101.81 Health claims: Soluble fiber from certain foods and risk of coronary heart disease (CHD).

* * * * *

(c) * * *

(2) * * *

(ii) * * *

(A) * * *

(*4*) *Oatrim*. The soluble fraction of alpha-amylase hydrolyzed oat bran or whole oat flour, also known as oatrim. Oatrim is produced from either oat bran as defined in paragraph (c)(2)(ii)(A)(*1*) of this section or whole oat flour as defined in paragraph (c)(2)(ii)(A)(*3*) of this section by solubilization of the starch in the starting material with an alpha-amylase hydrolysis process, and then removal by centrifugation of the insoluble components consisting of a high portion of protein, lipid, insoluble dietary fiber, and the majority of the flavor and color components of the starting material. Oatrim shall have a beta-glucan soluble fiber content up to 10 percent (dwb) and not less than that of the starting material (dwb).

* * * * *

(iii) * * *

(A) * * *

(*1*) One or more of the whole oat foods from paragraphs (c)(2)(ii)(A)(*1*), (c)(2)(ii)(A)(*2*), and (c)(2)(ii)(A)(*3*) of this section, and the whole oat foods shall contain at least 0.75 gram (g) of soluble fiber per reference amount customarily consumed of the food product; or

(2) The food containing the oatrim from paragraph (c)(2)(ii)(A)(*4*) of this section shall contain at least 0.75 g of beta-glucan soluble fiber per reference amount customarily consumed of the food product; or

* * * * *

Dated: September 27, 2002.

Margaret M. Dotzel,

Associate Commissioner for Policy.

[FR Doc. 02–25067 Filed 9–27–02; 4:39 pm]

BILLING CODE 4160–01–S

DEPARTMENT OF HEALTH AND HUMAN SERVICES

Food and Drug Administration

21 CFR Part 173

[Docket No. 02F–0042]

Secondary Direct Food Additives Permitted in Food for Human Consumption

AGENCY: Food and Drug Administration, HHS.

ACTION: Final rule.

SUMMARY: The Food and Drug Administration (FDA) is amending the food additive regulations to provide for the safe use of a mixture of peroxyacetic acid, octanoic acid, acetic acid, hydrogen peroxide, peroxyoctanoic acid, and 1-hydroxyethylidene-1,1-diphosphonic acid as an antimicrobial agent on meat carcasses, parts, trim, and organs. This action is in response to a petition filed by Ecolab, Inc.

DATES: This rule is effective October 2, 2002. Submit written or electronic objections and requests for a hearing by November 1, 2002.

ADDRESSES: Submit written objections to the Dockets Management Branch (HFA–305), Food and Drug Administration, 5630 Fishers Lane, rm. 1061, Rockville, MD 20852. Submit electronic objections to *http://www.fda.gov/dockets/ecomments*.

FOR FURTHER INFORMATION CONTACT: Andrew D. Laumbach, Center for Food Safety and Applied Nutrition (HFS–265), Food and Drug Administration, 5100 Paint Branch Pkwy., College Park, MD 20740, 202–418–3071.

SUPPLEMENTARY INFORMATION: In a notice published in the **Federal Register** of February 11, 2002 (67 FR 6265), FDA announced that a food additive petition (FAP 2A4731) had been filed by Ecolab Inc., Ecolab Center, 370 N. Wabasha St., St. Paul, MN 55102, proposing to amend the food additive regulations in Part 173 *Secondary Direct Food Additives Permitted in Food for Human Consumption* (21 CFR part 173) to provide for the safe use of a mixture of peroxyacetic acid, octanoic acid, acetic acid, hydrogen peroxide, peroxyoctanoic acid, and 1-hydroxyethylidene-1,1-diphosphonic acid as an antimicrobial agent on meat parts, trim, and organs.

The agency has previously approved the use of the subject mixture on red meat carcasses (§ 173.370(b)(1)) in response to an earlier petition submitted by Ecolab, Inc. In the evaluation that led to that regulation, the agency considered ''red meat'' to include the species cattle, swine, sheep, goats, and equine. The United States Department of Agriculture's Food Safety and Inspection Service (FSIS) uses the term ''meat'' to refer to these species (9 CFR 301.2). Thus, FDA is removing the term ''red'' as a descriptor for ''meat carcasses'' in § 173.370(b)(1) to make its terminology consistent with FSIS.

FDA has evaluated data in the petition and other relevant material. Based on this information, the agency concludes that the proposed use of the additive is safe and the additive will achieve its intended technical effect as an antimicrobial agent on meat carcasses, parts, trim, and organs.

Therefore, FDA is approving the use of a mixture of peroxyacetic acid, octanoic acid, acetic acid, hydrogen peroxide, peroxyoctanoic acid, and 1-hydroxyethylidene-1, 1-diphosphonic acid as an antimicrobial agent on meat carcasses, parts, trim, and organs. Accordingly, § 173.370 is amended as set forth below.

In accordance with § 171.1(h) (21 CFR 171.1(h)), the petition and the documents that FDA considered and relied upon in reaching its decision to approve the petition are available for inspection at the Center for Food Safety and Applied Nutrition by appointment with the contact person (see **FOR FURTHER INFORMATION CONTACT**). As provided in § 171.1(h), the agency will delete from the documents any materials that are not available for public disclosure before making the documents available for inspection.

In the notice of filing, FDA gave interested parties an opportunity to submit comments on the petitioner's environmental assessment. FDA received no comments in response to that notice.

The agency has carefully considered the potential environmental effects of this action. FDA has concluded that the action will not have a significant impact on the human environment, and that an environmental impact statement is not required. The agency's finding of no significant impact and the evidence supporting that finding, contained in an environmental assessment, may be seen in the Dockets Management Branch (*see* **ADDRESSES**) between 9 a.m. and 4 p.m., Monday through Friday.

This final rule contains no collection of information. Therefore, clearance by the Office of Management and Budget under the Paperwork Reduction Act of 1995 is not required.

Any person who will be adversely affected by this regulation may at any time file with the Dockets Management Branch (see **ADDRESSES**) written or electronic objections. Each objection shall be separately numbered, and each numbered objection shall specify with particularity the provisions of the regulation to which the objection is made and the grounds for the objection. Each numbered objection on which a hearing is requested shall specifically so state. Failure to request a hearing for any particular objection shall constitute a waiver of the right to a hearing on that objection. Each numbered objection for which a hearing is requested shall include a detailed description and analysis of the specific factual information intended to be presented in support of the objection in the event that a hearing is held. Failure to include such a description and analysis for any particular objection shall constitute a waiver of the right to a hearing on the objection. Three copies of all documents are to be submitted and are to be identified with the docket number found in brackets in the heading of this document. Any objections received in response to the regulation may be seen in the Dockets Management Branch between 9 a.m. and 4 p.m., Monday through Friday.

List of Subjects in 21 CFR Part 173

Food additives.

Therefore, under the Federal Food, Drug, and Cosmetic Act and under authority delegated to the Commissioner of Food and Drugs and redelegated to the Director, Center for Food Safety and Applied Nutrition, 21 CFR part 173 is amended as follows:

PART 173—SECONDARY DIRECT FOOD ADDITIVES PERMITTED IN FOOD FOR HUMAN CONSUMPTION

1. The authority citation for 21 CFR part 173 continues to read as follows:

Authority: 21 U.S.C. 321, 342, 348.

2. Section 173.370 is amended by revising paragraph (b)(1) to read as follows:

§ 173.370 Peroxyacids.

* * * * *

(b)(1) The additive is used as an antimicrobial agent on meat carcasses, parts, trim, and organs in accordance with current industry practice where the maximum concentration of peroxyacids is 220 parts per million (ppm) as peroxyacetic acid, and the maximum concentration of hydrogen peroxide is 75 ppm.

* * * * *

Dated: September 18, 2002.

L. Robert Lake,

Director, Office of Regulations and Policy, Center for Food Safety and Applied Nutrition.

[FR Doc. 02–25078 Filed 10–1–02; 8:45 am]

BILLING CODE 4160–01–S

ENVIRONMENTAL PROTECTION AGENCY

40 CFR Part 52

[CA–084–FON; FRL–7387–9]

Finding of Failure To Submit State Implementation Plan Revisions for Ozone (1-Hour Standard), California—San Joaquin Valley

AGENCY: Environmental Protection Agency (EPA).

ACTION: Final rule.

SUMMARY: EPA is taking final action to find that California failed to submit state implementation plan (SIP) revisions required under the Clean Air Act (CAA or Act) for the severe San Joaquin Valley Ozone Nonattainment Area (the San Joaquin Valley or the Valley). The required revisions are an attainment demonstration, a reasonable further progress demonstration, a reasonably available control technology (RACT) rule for lime kilns, an inventory and contingency measures. California was required to submit these revisions by May 31, 2002.

This action triggers the 18-month clock for mandatory application of sanctions and 2-year clock for a Federal implementation plan (FIP) under the Act. This action is consistent with the CAA mechanism for assuring SIP submissions.

EFFECTIVE DATE: This action was effective as of September 18, 2002.

FOR FURTHER INFORMATION CONTACT: Doris Lo, U. S. Environmental Protection Agency, Region 9, Air Division (AIR–2), 75 Hawthorne Street, San Francisco, CA 94105–3901, Telephone: (415) 972–3959; *lo.doris@epa.gov.*

SUPPLEMENTARY INFORMATION:

I. Background

The San Joaquin Valley Ozone Nonattainment Area includes the following counties in California's central valley: San Joaquin, part of Kern,[1] Fresno, Kings, Madera, Merced, Stanislaus and Tulare.

When the CAA was amended in 1990, each area of the Country that was designated nonattainment for the 1-hour ozone standard, including the San Joaquin Valley, was classified by operation of law as ''marginal,'' ''moderate,'' ''serious,'' ''severe'' or ''extreme'' depending on the severity of the area's air quality problem. CAA sections 107(d)(1)(C) and 181(a). Each of these CAA classifications has different requirements, with the most stringent requirements for ''extreme'' areas. Based on its air quality during the 1987–1989 period, the San Joaquin Valley nonattainment area was initially classified as serious with an attainment date of no later than November 15, 1999. *See* 56 FR 56694 (November 6, 1991) and CAA section 181(a)(1).

On June 19, 2000, EPA proposed to find that the San Joaquin Valley had failed to attain the 1-hour ozone national ambient air quality standards (NAAQS) by the serious area attainment date of November 15, 1999. 65 FR 37926. A final finding of failure to attain was published on October 23, 2001 (66 FR 56476) and the Valley was thus reclassified by operation of law as a severe ozone nonattainment area (effective December 10, 2001). Along with the severe classification, the Valley became subject to new planning requirements under section 182(d) of the CAA. Under section 182(d), severe area plans must meet the requirements for serious area plans in addition to those for severe areas. Moreover, the severe area plan revisions for the area must also meet the more general nonattainment provisions of section 172(c). In its final reclassification action, EPA set May 31, 2002 as the due date for submittal of plan revisions addressing these requirements. 66 FR 56481.

On June 18 and August 6, 2002, California submitted plan revisions addressing several of the severe area requirements for the San Joaquin Valley (revised title V operating permit and new source review programs to address the new lower 25 ton per year major source cutoff for volatile organic compounds (VOCs) and oxides of nitrogen (NO_X) and the offset ratio of 1.3:1; rule requiring fees for major sources should the area fail to attain by 2005; and RACT rules for most sources subject to the lower major source applicability threshold). Furthermore, on September 6, 2002, California submitted San Joaquin Valley Air Pollution Control District commitments to adopt new and revised control measures.

II. Final Action

A. Finding of Failure To Submit Required SIP Revisions

While California's submittals address several of the severe area requirements for the San Joaquin Valley and help ensure progress towards clean air, there are still requirements which have not been addressed. Specifically, the State has not submitted a demonstration of attainment of the ozone NAAQS by no later than 2005 (sections 181(a) and 182(c)(2)(A)), a demonstration (known as reasonable further progress or rate of progress) of creditable emission reductions of ozone precursors of at least 3% per year until the attainment year (section 182(c)(2)(B)), a RACT rule for lime kilns addressing the 25 ton per year major source cutoff (section 182(b)(2)(C)), an inventory (section 172(c)(3)) and contingency measures (section 172(c)(9)). Thus, EPA is today making a finding of failure to submit SIP revisions addressing these CAA required elements.

If California does not submit the required plan revisions within 18 months of the effective date of today's rulemaking, pursuant to CAA section 179(a) and 40 CFR 52.31, the offset sanction identified in CAA section 179(b) will be applied in the affected area. If the State has still not made a complete submittal 6 months after the offset sanction is imposed, then the highway funding sanction will apply in the affected area, in accordance with 40 CFR 52.31.[2] The 18-month clock will

[1] *See* 66 FR 56476 (November 8, 2001)(boundary change for the San Joaquin Valley establishing the eastern portion of Kern County as its own nonattainment area).

[2] In a 1994 rulemaking, EPA established the Agency's selection of the sequence of these two sanctions: The offset sanction under section 179(b)(2) shall apply at 18 months, followed 6 months later by the highway sanction under section 179(b)(1) of the Act. EPA does not choose to deviate

stop and the sanctions will not take effect if, within 18 months after the date of the finding, EPA finds that the State has made a complete submittal addressing these severe area ozone requirements for the San Joaquin Valley. In addition, CAA section 110(c)(1) provides that EPA must promulgate a federal implementation plan (FIP) no later than 2 years after a finding under section 179(a) unless EPA takes final action to approve the submittal within 2 years of EPA's finding.

B. Effective Date Under the Administrative Procedures Act

This final action is effective on September 18, 2002. Under the Administrative Procedures Act (APA), 5 U.S.C. 553(d)(3), an agency rulemaking may take effect before 30 days after the date of publication in the **Federal Register** if an agency has good cause to mandate an earlier effective date. Today's action concerns SIP revisions that are already overdue and the State has been aware of applicable provisions of the CAA relating to overdue SIPs. In addition, today's action simply starts a ''clock'' that will not result in sanctions for 18 months, and that the State may ''turn off'' through the submission of a complete SIP submittal. These reasons support an effective date prior to 30 days after the date of publication.

C. Notice-and-Comment Under the Administrative Procedures Act

This final agency action is not subject to the notice-and-comment requirements of the APA, 5 U.S.C. 533(b). EPA believes that because of the limited time provided to make findings of failure to submit regarding SIP submissions, Congress did not intend such findings to be subject to notice-and-comment rulemaking. However, to the extent such findings are subject to notice-and-comment rulemaking, EPA invokes the good cause exception pursuant to the APA, 5 U.S.C. 553(d)(3). Notice and comment are unnecessary because no EPA judgment is involved in making a nonsubstantive finding of failure to submit SIPs required by the CAA. Furthermore, providing notice and comment would be impracticable because of the limited time provided under the statute for making such determinations. Finally, notice and comment would be contrary to the public interest because it would divert Agency resources from the critical substantive review of submitted SIPs. See 58 FR 51270, 51272, note 17 (October 1, 1993); 59 FR 39832, 39853 (August 4, 1994).

III. Administrative Requirements

A. Executive Order 12866

The Office of Management and Budget has exempted this regulatory action from Executive Order 12866, entitled ''Regulatory Planning and Review.''

B. Executive Order 13211

This rule is not subject to Executive Order 13211, ''Actions Concerning Regulations That Significantly Affect Energy Supply, Distribution, or Use'' (66 FR 28355 (May 22, 2001)) because it is not a significant regulatory action under Executive Order 12866.

C. Executive Order 13045

Executive Order 13045, entitled Protection of Children from Environmental Health Risks and Safety Risks (62 FR 19885, April 23, 1997), applies to any rule that: (1) Is determined to be ''economically significant'' as defined under Executive Order 12866, and (2) concerns an environmental health or safety risk that EPA has reason to believe may have a disproportionate effect on children. If the regulatory action meets both criteria, the Agency must evaluate the environmental health or safety effects of the planned rule on children, and explain why the planned regulation is preferable to other potentially effective and reasonably feasible alternatives considered by the Agency. This rule is not subject to Executive Order 13045 because it does not involve decisions intended to mitigate environmental health or safety risks.

D. Executive Order 13132

Executive Order 13132, entitled Federalism (64 FR 43255, August 10, 1999) revokes and replaces Executive Orders 12612, Federalism and 12875, Enhancing the Intergovernmental Partnership. Executive Order 13132 requires EPA to develop an accountable process to ensure ''meaningful and timely input by State and local officials in the development of regulatory policies that have federalism implications.'' ''Policies that have federalism implications'' is defined in the Executive Order to include regulations that have ''substantial direct effects on the States, on the relationship between the national government and the States, or on the distribution of power and responsibilities among the various levels of government.'' Under Executive Order 13132, EPA may not issue a regulation that has federalism implications, that imposes substantial direct compliance costs, and that is not required by statute, unless the Federal government provides the funds necessary to pay the direct compliance costs incurred by State and local governments, or EPA consults with State and local officials early in the process of developing the proposed regulation. EPA also may not issue a regulation that has federalism implications and that preempts State law unless the Agency consults with State and local officials early in the process of developing the proposed regulation.

This rule will not have substantial direct effects on the States, on the relationship between the national government and the States, or on the distribution of power and responsibilities among the various levels of government, as specified in Executive Order 13132, because it does not alter the relationship or the distribution of power and responsibilities established in the Clean Air Act. Thus, the requirements of section 6 of the Executive Order do not apply to this rule.

E. Executive Order 13175

Executive Order 13175, entitled ''Consultation and Coordination with Indian Tribal Governments'' (65 FR 67249, November 6, 2000), requires EPA to develop an accountable process to ensure ''meaningful and timely input by tribal officials in the development of regulatory policies that have tribal implications.'' ''Policies that have tribal implications'' is defined in the Executive Order to include regulations that have ''substantial direct effects on one or more Indian tribes, on the relationship between the Federal government and the Indian tribes, or on the distribution of power and responsibilities between the Federal government and Indian tribes.''

This final rule does not have tribal implications. It will not have substantial direct effects on tribal governments, on the relationship between the Federal government and Indian tribes, or on the distribution of power and responsibilities between the Federal government and Indian tribes, as specified in Executive Order 13175. Thus, Executive Order 13175 does not apply to this rule.

F. Regulatory Flexibility Act

The Regulatory Flexibility Act (RFA) generally requires an agency to conduct a regulatory flexibility analysis of any rule subject to notice and comment rulemaking requirements unless the agency certifies that the rule will not

from this presumptive sequence in this instance. For more details on the timing and implementation of the sanctions, see 59 FR 39832 (August 4, 1994), promulgating 40 CFR 52.31, ''Selection of sequence of mandatory sanctions for findings made pursuant to section 179 of the Clean Air Act.''

have a significant economic impact on a substantial number of small entities. Small entities include small businesses, small not-for-profit enterprises, and small governmental jurisdictions.

This final rule will not have a significant impact on a substantial number of small entities because findings of failure to submit required SIP revisions do not by themselves create any new requirements. Therefore, I certify that this action will not have a significant economic impact on a substantial number of small entities.

G. Unfunded Mandates

Under section 202 of the Unfunded Mandates Reform Act of 1995 (''Unfunded Mandates Act''), signed into law on March 22, 1995, EPA must prepare a budgetary impact statement to accompany any proposed or final rule that includes a Federal mandate that may result in estimated costs to State, local, or tribal governments in the aggregate; or to private sector, of $100 million or more. Under section 205, EPA must select the most cost-effective and least burdensome alternative that achieves the objectives of the rule and is consistent with statutory requirements. Section 203 requires EPA to establish a plan for informing and advising any small governments that may be significantly or uniquely impacted by the rule.

EPA has determined that today's action does not include a Federal mandate that may result in estimated costs of $100 million or more to either State, local, or tribal governments in the aggregate, or to the private sector. The CAA provision discussed in this notice requires states to submit SIPs. This notice merely provides a finding that California has not met that requirement. Accordingly, no additional costs to State, local, or tribal governments, or to the private sector, result from this action.

H. National Technology Transfer and Advancement Act

Section 12 of the National Technology Transfer and Advancement Act (NTTAA) of 1995 requires Federal agencies to evaluate existing technical standards when developing a new regulation. To comply with NTTAA, EPA must consider and use ''voluntary consensus standards'' (VCS) if available and applicable when developing programs and policies unless doing so would be inconsistent with applicable law or otherwise impractical. EPA believes that VCS are inapplicable to today's action because it does not require the public to perform activities conducive to the use of VCS.

I. Submission to Congress and the Comptroller General

The Congressional Review Act, 5 U.S.C. 801 *et seq.*, as added by the Small Business Regulatory Enforcement Fairness Act of 1996, generally provides that before a rule may take effect, the agency promulgating the rule must submit a rule report, which includes a copy of the rule, to each House of the Congress and to the Comptroller General of the United States. EPA will submit a report containing this rule and other required information to the U.S. Senate, the U.S. House of Representatives, and the Comptroller General of the United States prior to publication of the rule in the **Federal Register**. A major rule cannot take effect until 60 days after it is published in the **Federal Register**. This rule is not a ''major'' rule as defined by 5 U.S.C. 804(2).

J. Petitions for Judicial Review

Under section 307(b)(1) of the Clean Air Act, petitions for judicial review of this action must be filed in the United States Court of Appeals for the appropriate circuit by December 2, 2002. Filing a petition for reconsideration by the Administrator of this final rule does not affect the finality of this rule for the purposes of judicial review nor does it extend the time within which a petition for judicial review may be filed, and shall not postpone the effectiveness of such rule or action. This action may not be challenged later in proceedings to enforce its requirements. (*See* section 307(b)(2).)

List of Subjects in 40 CFR Part 52

Environmental protection, Air pollution control, Intergovernmental relations, Particular matter, Reporting and recordkeeping requirements.

Authority: 42 U.S.C. 7401 *et seq.*

Dated: September 18, 2002.

Wayne Nastri,

Regional Administrator, Region IX.

[FR Doc. 02–24912 Filed 10–1–02; 8:45 am]

BILLING CODE 6560–50–P

ENVIRONMENTAL PROTECTION AGENCY

40 CFR Parts 52 and 81

[FRL–7387–5]

Approval and Promulgation of Implementation Plans; Louisiana; Baton Rouge Nonattainment Area; Ozone; 1–Hour Ozone Attainment Demonstration; Attainment Date Extension, and Withdrawal of Nonattainment Determination and Reclassification

AGENCY: Environmental Protection Agency (EPA).

ACTION: Final rule.

SUMMARY: Pursuant to the Clean Air Act (Act), EPA is approving the Louisiana 1-hour ozone attainment demonstration State Implementation Plan (SIP) for the Baton Rouge serious ozone nonattainment area. In conjunction with its approval of the attainment demonstration, EPA is: approving Louisiana's transport demonstration and extending the ozone attainment date for the Baton Rouge ozone nonattainment area to November 15, 2005, while retaining the area's current classification as a serious ozone nonattainment area; withdrawing EPA's June 24, 2002, rulemaking determining nonattainment and reclassification of the Baton Rouge ozone nonattainment area; finding that the Baton Rouge ozone nonattainment area meets the reasonably available control measures (RACM) requirements of the Act; approving the State's enforceable commitment to perform a mid-course review and submit a SIP revision to EPA by May 1, 2004; approving the motor vehicle emissions budget (MVEB) and an enforceable commitment to submit revised budgets using MOBILE6; and approving an enforceable transportation control measure (TCM).

This action also approves SIP submittals relating to corrections to the 1990 Base Year Emissions Inventory, the 9% Rate-of-Progress Plan (ROPP), and the 15% ROPP.

DATES: This rule is effective October 2, 2002. The amendment to § 81.319 which published on June 24, 2002 (67 FR 42688) and were revised on August 20, 2002 (67 FR 53882) are withdrawn.

ADDRESSES: Copies of documents relevant to this action are available for public inspection during normal business hours at the following addresses: U.S. Environmental Protection Agency, Region 6, Air Planning Section, 1445 Ross Avenue, Dallas, Texas 75202–2733; Louisiana

Department of Environmental Quality, 7920 Bluebonnet Boulevard, Baton Rouge, Louisiana 70884. Please contact the appropriate office at least 24 hours in advance.

FOR FURTHER INFORMATION CONTACT: Ms. Maria L. Martinez, Air Planning Section (6PD–L), EPA Region 6, 1445 Ross Avenue, Dallas, Texas 75202–2733, telephone (214) 665–2230.

SUPPLEMENTARY INFORMATION: Throughout this document whenever ''we,'' ''us,'' or ''our'' is used, we mean EPA.

Background

A notice of proposed rulemaking was published on this action on August 2, 2002 (67 FR 50391). EPA has also published a notice regarding the Baton Rouge area's potential eligibility for an attainment date extension on May 9, 2001 (66 FR 23646). EPA received comments on these proposals. EPA has also published a related notice: the ''Extension of Attainment Dates for Downwind Transport Areas,'' 64 FR 14441 (March 25, 1999). That notice announced EPA's interpretation of the Act regarding the possibility of extending attainment dates for ozone nonattainment areas that had been classified as moderate or serious for the 1-hour ozone standard and which are downwind of areas that have interfered with their ability to demonstrate attainment. In that notice EPA also noted that we intended to finalize our interpretation only when we applied this policy in the context of individual rulemakings addressing specific attainment demonstrations and requests for attainment date extensions. We have received comments on our application of this policy to the Baton Rouge area. Therefore, in this final rule, EPA responds to adverse comments on these proposed rulemakings and notices. For details on the SIP submittals and EPA's analysis of the submittals, refer to the notices of the proposed rules referenced above in this paragraph, and the technical support documents for the August 2, 2002, and May 9, 2001, proposals.

EPA is making this final rulemaking effective immediately. Section 553(d) of the Administrative Procedure Act generally provides that rules may not take effect earlier than 30 days after they are published in the **Federal Register**. However, if an Agency identifies a good cause, section 553(d)(3) allows a rule to take effect earlier, provided that the Agency publishes its reasoning in the final rule. EPA is making this action effective immediately because the effective date of the nonattainment determination and reclassification (which is being withdrawn as a result of this final rule) is imminent. In addition, EPA finds good cause for making this action effective immediately because, in part, it relieves a restriction that would otherwise go into effect.

Information

This section provides additional information by addressing the following questions:

I. What Louisiana SIP revisions are the topic of this action?
II. What previous actions have been taken regarding the Baton Rouge area attainment demonstration and attainment date?
III. What MVEBs are we approving?
IV. What revisions concerning the 1990 Base Year Emissions Inventory, the 9% ROPP, and the 15% ROPP are we approving?
V. Implementation of RACM.
VI. What are the requirements for full approval of the attainment demonstration?
VII. Did Louisiana fulfill these requirements for full approval?
VIII. What are the criteria for an attainment date extension?
IX. How did Louisiana satisfy the criteria for an attainment date extension?
X. What action is EPA taking regarding the Determination of Nonattainment as of November 15, 1999, and Reclassification published on June 24, 2002?
XI. What comments were received on the proposals covered by this final action, and on the March 25, 1999, publication of the attainment date extension policy, and how has EPA responded to those?
XII. What action is EPA taking regarding the State submittals addressed by this final rule?

I. What Louisiana SIP Revisions Are the Topic of This Action?

The Baton Rouge ozone nonattainment area encompasses the East Baton Rouge, West Baton Rouge, Ascension, Iberville, and Livingston Parishes (40 CFR 81.319). The State of Louisiana made several submittals to us relating to the ozone attainment demonstration and their request for an extension of the attainment date for the Baton Rouge ozone nonattainment area. The submittals listed below relate directly to EPA's final action described in this document:

(a) On December 31, 2001, LDEQ submitted an ozone attainment demonstration and transport SIP revision. The SIP revision included:

i. A revision to the 15% ROPP for the control of Volatile Organic Compounds (VOC) emissions in the Baton Rouge area. The 15% Rate ROPP was approved by EPA on October 22, 1996 (61 FR 54737).

ii. Revisions to the 1990 base year emissions inventory. The inventory was approved on July 2, 1999 (64 FR 35930).

iii. Revisions to the Post-1996 ROPP. The Post-1996 ROPP, also referred to as the 9% ROPP, was approved on July 2, 1999 (64 FR 35930).

iv. Revisions to the Inspection and Maintenance (I/M) program.

v. Attainment MVEBs for 2005 for VOCs and Nitrogen Oxides (NO_X).

vi. An enforceable commitment to submit revised MVEBs within 24 months after the release of MOBILE6.

vii. An enforceable commitment for mid-course review.

viii. An enforceable transportation control measure referred to as the Advanced Transportation Management System.

ix. An emissions control strategy that incorporates federal, state, and local control measures.

x. Revisions to Louisiana's New Source Review (NSR) rules.

xi. Substitute contingency measures.

(b) On February 27, 2002, LDEQ submitted final rules for the emission reductions credit banking program.

(c) On February 27, 2002, LDEQ also submitted final revisions to the contingency measures proposed in the December 31, 2002, SIP submittal.

(d) On May 20, 2002, LDEQ submitted a letter concerning the revisions to the rulemaking dealing with VOC emissions from industrial wastewater.

(e) On July 25, 2002, the Governor submitted Louisiana's final rule for the control of emissions of nitrogen oxides. Prior to that, on February 1, 2002, LDEQ had submitted changes to the proposed rule for control of NO_X emissions and on April 8, 2002, LDEQ had submitted a letter requesting parallel processing of revisions to the State's NO_X regulations.

EPA has taken separate final actions on other parts of the Baton Rouge SIP, including the I/M Program, NO_X regulations, NSR, emissions reductions credit banking, and Contingency Measures. EPA also approved SIP revisions dealing with VOC emissions from industrial wastewater which are published at 67 FR 41840 (June 20, 2002). In this final rulemaking the following are considered: The ozone attainment demonstration plan and its associated MVEBs; the transport SIP related materials; the RACM analysis; the revisions to the 1990 base year inventory, the 15% ROPP, and the Post-1996 ROPP, the attainment date extension, and a withdrawal of nonattainment determination and reclassification.

II. What Previous Actions Have Been Taken Regarding the Baton Rouge Area Attainment Demonstration and Attainment Date?

On May 9, 2001 (66 FR 23646), EPA proposed to find that the Baton Rouge ozone nonattainment area had not attained the 1-hour ozone national ambient air quality standard (NAAQS) by the attainment date for serious nonattainment areas (November 15, 1999). Also in that notice, EPA issued a notice of the Baton Rouge area's potential eligibility for an attainment date extension, pursuant to EPA's, ''Guidance on Extension of Air Quality Attainment Dates for Downwind Transport Areas' (hereinafter referred to as the attainment date extension policy) (Richard D. Wilson, Acting Assistant Administrator for Air and Radiation) issued on July 16, 1998. In the May 9, 2001, **Federal Register**, EPA proposed to finalize the reclassification of the Baton Rouge nonattainment area only after the area had an opportunity to qualify for an attainment date extension under the attainment date extension policy.

Subsequent to our May 9, 2001, proposed rulemaking, a relevant court decision was issued which affected EPA's proposed rulemaking for the Baton Rouge area. EPA was in the process of reviewing the Attainment Plan/Transport SIP when the United States District Court for the Middle District of Louisiana entered a Judgment on March 7, 2002, ordering EPA to determine, by June 5, 2002, whether the Baton Rouge area had attained the applicable ozone standard under the CAA. *LEAN* v. *Whitman*, No. 00–879–A. In compliance with the Court's Order, EPA signed on June 5, 2002, and published in the **Federal Register** on June 24, 2002, (67 FR 42688) our determination that the Baton Rouge area did not attain the 1-hour ozone standard by November 15, 1999 in the **Federal Register** (67 FR 42688). By operation of law, that determination would result in the Baton Rouge area being reclassified from a serious to a severe nonattainment area on the effective date of that rule. EPA concurrently proposed to extend the effective date of our determination from August 23, 2002, to October 4, 2002 (67 FR 42697, June 24, 2002). On August 20, 2002, we published an action finalizing the modification of the effective date of our June 24, 2002, final reclassification from August 23, 2002, until October 4, 2002.

In the June 24, 2002, proposed rulemaking, EPA also set forth its intent to withdraw the final determination and reclassification, if EPA granted the State an attainment date extension before the effective date of the determination and reclassification rule.

On August 2, 2002 (67 FR 50391), EPA proposed to approve Louisiana's 1-hour ozone attainment demonstration SIP for the Baton Rouge ozone nonattainment area. Also, in that notice we proposed to approve an extension of the ozone attainment date for the Baton Rouge area to November 15, 2005, while retaining the area's classification as a serious ozone nonattainment area if EPA took final action to approve the State's ozone attainment demonstrations. EPA also proposed other related actions in the August 2, 2002, proposal.

Additionally, EPA has taken separate actions on other related revisions to the Baton Rouge SIP, including the I/M Program (proposed at 67 FR 44410, July 2, 2002), NO_X regulations (proposed at 67 FR 30638, May 7, 2002, and 67 FR 48095, July 23, 2002), NSR (proposed at 67 FR 48090, July 23, 2002), emissions reductions credit banking (proposed at 67 FR 48083, July 23, 2002), Contingency Measures (proposed at 67 FR 35468, May 20, 2002), and SIP revisions dealing with VOC emissions from industrial wastewater (67 FR 41840, June 20, 2002). Please see the related final actions which published in the **Federal Register** on September 26, September 27, and September 30, 2002.

EPA has received comments on portions of our May 9, 2001; June 24, 2002; and August 2, 2002, proposed rules. The Tulane Environmental Law Clinic and the Louisiana Environmental Action Network (LEAN) submitted adverse comments on portions of the May 9, 2001; June 24, 2002; and August 2, 2002, proposed rules. Earthjustice submitted adverse comments on portions of the August 2, 2002, proposed rule. Louisiana Generating, LLC and Big Cajun I and II (LAGen), submitted adverse comments on Section 4.2.1 of the SIP in response to our August 2, 2002, proposed approval. All other comments on the proposals supported EPA's proposed actions. In this final rule, EPA responds to the adverse comments received in response to the relevant proposals. EPA also responds to relevant adverse comments on its March 25, 1999, notice of interpretation regarding the attainment date extension policy (64 FR 14441).

III. What MVEBs Are We Approving?

On December 31, 2001, Louisiana submitted motor vehicle emissions budgets for the 2005 attainment year for the Baton Rouge area in their SIP. The attainment year MVEBs established by this plan that we are approving are 15.48 tons per day for VOC and 34.26 tons per day for NO_X for the Baton Rouge area. These budgets were posted on the EPA website for public comment. No comments were received by EPA (67 FR 46970). EPA is approving these MVEBs because they are consistent with the control measures in the SIP, and the SIP as a whole demonstrates attainment of the 1-hour ozone standard. The rationale for our approval is detailed in the August 2, 2002, proposed action. Louisiana has committed to revise its 2005 MVEBs within two years after the release of MOBILE6. Louisiana has committed to not performing transportation conformity determinations during the second year following the release of MOBILE6 unless and until the State submits an MVEB which is developed using MOBILE6 and which we find adequate.

All States whose attainment demonstrations include the effects of the Tier 2/sulfur program have committed to revise and resubmit their MVEBs after we release MOBILE6. If a state fails to meet its commitment to submit revised budgets using MOBILE6, EPA could make a finding of failure to implement the SIP, which would start a sanctions clock under section 179 of the Act.

The final approval action we are taking today will be effective for conformity purposes only until revised MVEBs are submitted and we have found them adequate. In other words, the budgets we are approving today will apply for conformity purposes only until there are new, adequate budgets consistent with the State's commitments to revise the budgets. The new budgets will apply for conformity purposes after we find them adequate.

We are limiting the duration of our approval in this manner because we are only approving the attainment demonstration and the budgets based on the State's commitment to revise them. Therefore, if we confirm that the revised budgets are adequate, they will be more appropriate than the budgets we are approving for conformity purposes now.

If the revised budgets raise issues about the sufficiency of the attainment demonstration, we will work with the State to address the issues. If the revised budgets show that motor vehicle emissions are lower than the budgets we approve, a reassessment of the attainment demonstration's analysis will be necessary before reallocating the emission reductions or assigning them to the MVEB as a safety margin. In other words, the State must assess how its original attainment demonstration is impacted by using MOBILE6 v MOBILE5 before they reallocate any apparent motor vehicle emission

reductions resulting from the use of MOBILE6.

IV. What Revisions Concerning the 1990 Base Year Emissions Inventory, the 9% ROPP, and the 15% ROPP Are We approving?

Under the 1990 Clean Air Act Amendments (CAAA), States have the responsibility to inventory emissions contributing to NAAQS nonattainment, to track these emissions over time, and to ensure that control strategies are being implemented that reduce emissions and move areas towards attainment. The CAAA require ozone nonattainment areas designated as moderate, serious, severe, and extreme to submit a plan within three years of 1990 to reduce VOC emissions by 15 percent within six years after 1990. The baseline level of emissions, from which the 15 percent reduction is calculated, is determined by adjusting the base year inventory to exclude biogenic emissions and to exclude certain emission reductions not creditable towards the 15 percent. The 1990 base year emissions inventory is the primary inventory from which the periodic inventory, the Reasonable Further Progress projection inventory, and the modeling inventory are derived.[1] The base year inventory plays an important role in modeling demonstrations for areas classified as moderate and above.

States containing ozone nonattainment areas classified as marginal to extreme were required under section 182(a)(1) of the 1990 CAAA to submit a final, comprehensive, accurate, and current inventory of actual ozone season, weekday emissions from all sources by November 15, 1992. This inventory is for calendar year 1990 and is denoted as the base year inventory. It includes both anthropogenic and biogenic sources of VOC, NO_X, and carbon monoxide (CO).

Section 182(c)(2)(B) of the Act requires each State having one or more ozone nonattainment areas classified as serious or higher to develop a plan by November 15, 1994, that provides for additional actual VOC reductions of at least three percent per year, averaged over each consecutive three year period, beginning six years after enactment of the Act, until such time as these areas have attained the NAAQS for ozone. EPA approved the revisions to the 9% ROPP for the Baton Rouge area on July 2, 1999 (64 FR 35930).

The revisions we are approving today consist of revisions to the 1990 Base Year Emissions Inventory, the 15% ROPP, and the 9% ROPP, which were submitted as part of the December 31, 2001, Attainment Plan/Transport SIP. Specifically, they were submitted as part of the substitute contingency measures. The substitute contingency measures are the subject of a separate EPA rulemaking action which published in the **Federal Register** on September 26, 2002.

The revisions consisted of emission reductions resulting from the installation of VOC emission controls at the Trunkline Gas Company—Patterson Compressor Station (hereinafter referred to as Trunkline or Trunkline facility) in St. Mary Parish. The Trunkline facility is located approximately 40 kilometers from the Baton Rouge ozone nonattainment area. In 1997, EPA issued a policy allowing 1-hour ozone nonattainment areas to take credit in their Post-1996 ROPP[2] for emission reductions obtained from sources outside the designated nonattainment area, provided the sources are no farther away than 100 km (for VOC sources) or 200 km (for NO_X sources) away from the nonattainment area.[3]

The Trunkline Gas Company had not accounted for 13.4 tons per day of VOC emissions. As a result, the VOC emissions from this facility had not been included in the point source emissions inventory for 1990. Emissions reported in a corrected 1992 annual emissions inventory submitted to LDEQ on June 6, 1997, are the best estimate of the source's 1990 base year emissions. These emissions were added back to the 1990 base year emissions inventory. The revised 1990 VOC base year inventory that included these Trunkline emissions (*i.e.*, 13.4 tons per day) would result in a total of 204.6 tons per day revised 1990 base year inventory.

An additional 2.0 tons per day of emission reductions required were identified in the 15% ROPP revisions. The additional 2.0 tons per day were offset by 1.4 tons per day ''surplus'' 9% ROPP reduction from the Trunkline permit plus 0.6 tons per day of point source reductions (163 tons per year or 0.45 tons per day of VOCs from the Dow Chemical permit and 56 tons per year or 0.15 tons per day of VOCs from the BASF Corporation permit).

There were also an additional 1.2 tons per day of reductions required for the 9% ROPP identified in the revisions. These were taken from the 13.0 tons per day Trunkline emissions reductions that were netted from the post-90 emissions growth.

For additional detailed discussions on the above mentioned revisions please see our August 2, 2002, rulemaking (67 FR 50396). EPA received adverse comments concerning these revisions. Those comments are addressed elsewhere in this notice.

V. Implementation of RACM

Section 172(c)(1) of the Act requires attainment demonstration SIPs to provide for the implementation of all RACM as expeditiously as practicable. EPA has previously provided guidance interpreting the RACM requirements of 172(c)(1). (See 57 FR 13498, 13560.) We also discussed the RACM requirements in our August 2, 2002, **Federal Register** proposal. EPA has reviewed the state's submitted analyses, the process used to review and select transportation control measures, the state's evaluation of potential stationary source control measures, and the attainment year emissions inventories for the Baton Rouge area. While the Act requires nonattainment areas to implement available RACM measures, EPA does not believe that section 172(c)(1) requires implementation of potential RACM measures that either require intensive and costly implementation efforts or that produce relatively small emissions reductions that will not accelerate attainment of the ozone standard.

Analyses conducted by LDEQ concluded that the additional set of evaluated measures are not reasonably available for the Baton Rouge area, because: (a) Some would require an intensive and costly effort for numerous small area sources, and (b) the measures would not produce emission reductions sufficient to advance the attainment date in the Baton Rouge area. Therefore, the measures were rejected as possible RACM.

EPA received adverse comments on our proposed finding that Louisiana has satisfied the RACM requirements of the Act. Those comments are addressed below. EPA believes that the reductions from the measures rejected by the State would not accelerate attainment of the ozone NAAQS. Based upon EPA's

[1] Further information on these inventories and their purpose can be found in the ''Emission Inventory Requirements for Ozone State Implementation Plans,'' U.S. Environmental Protection Agency, Office of Air Quality Planning and Standards, Research Triangle Park, North Carolina, March 1991.

[2] EPA has historically allowed a surplus emission reduction in ROPP to be credited towards meeting the section 172 and section 182 requirements. EPA's rationale is that not allowing excess emission reductions to be used as contingency measures discourages areas from reducing emissions ''as expeditiously as practicable'' and is, therefore, inconsistent with section 172 of the CAA.

[3] EPA memorandum, ''Guidance for Implementing the 1-Hour Ozone and Pre-Existing PM_{10} NAAQS,'' from Richard D. Wilson, Acting Assistant Administrator for Air and Radiation, December 29, 1997.

review of the State's analysis and submission, the explanation provided in our August 2, 2002, proposed rule (67 FR 50391) and our interpretation of the Act, EPA is approving Louisiana's RACM analysis.

VI. What Are the Requirements for Full Approval of the Attainment Demonstration?

The attainment demonstration SIP must meet applicable criteria as detailed in the Act. The specific requirements of the Act for serious ozone nonattainment areas are found in section 182(c). Section 172 provides the general requirements for nonattainment plans. Refer to our August 2, 2002, proposal (67 FR 50391) for further details of requirements for attainment demonstrations.

VII. Did Louisiana Fulfill These Requirements for Full Approval?

EPA guidance published in 1996 provides that states may rely on a modeled attainment demonstration supplemented with additional weight of evidence (WOE) to demonstrate attainment (''Guidance on the Use of Modeled Results to Demonstrate Attainment of the Ozone NAAQS,'' EPA–454/B–95–007, June 1996). In our August 2, 2002, **Federal Register** notice we listed documents containing many of EPA's guidelines affecting the content and review of ozone attainment demonstration submittals. (67 FR 50394.) In that notice, we also described in detail the modeling requirements for an attainment demonstration as well as the additional analyses that may be considered when the deterministic approach, as described in EPA guidance, does not show attainment (67 FR 50394–50395). In the same **Federal Register** document, EPA details the statistical and modeling data presented in the state's attainment demonstration that support the validity of the ozone modeling results and the adequacy of the adopted ozone attainment strategies. The State concludes, and EPA concurs, that the modeling system performs at an acceptable level because it satisfactorily reproduces peak ozone concentrations relative to the monitored peak ozone concentrations. The modeling system adequately simulates the observed magnitude and spatial and temporal patterns of monitored ozone concentrations. Furthermore, the modeling results accurately differentiate between days with marginal ozone levels and days with elevated ozone concentrations. Therefore, based on the modeling and WOE results presented by the State which confirm the adequacy of the adopted emission control strategy, EPA is approving the State's attainment demonstration. EPA also finds that the appropriate attainment date is November 15, 2005, based on the attainment demonstration. EPA received adverse comments regarding the State's modeled attainment demonstration. These comments and our responses are summarized elsewhere in this notice.

VIII. What Are the Criteria for an Attainment Date Extension?

EPA's policy regarding an extension of the ozone attainment date for the Baton Rouge area was set forth in EPA's notice of proposed rulemakings dated May 9, 2001 (66 FR 23646, 23650–23651) and August 2, 2002 (67 FR 50391). On July 16, 1998, a guidance memorandum entitled ''Extension of Attainment Dates for Downwind Transport Areas'' was issued by EPA and was published in a notice of interpretation on March 25, 1999 (64 FR 12221). In it, EPA set forth its interpretation of the Act regarding the extension of attainment dates for ozone nonattainment areas that have been classified as moderate or serious for the 1-hour ozone standard, and which are downwind of areas that have interfered with the moderate and serious nonattainment areas's attainment of the ozone standard by dates prescribed in the Act. EPA stated that it will consider extending the attainment date for an area or a state that:

1. Has been identified as a downwind area affected by transport from either an upwind area in the same state with a later attainment date or an upwind area in another state that significantly contributes to downwind ozone nonattainment;

2. Has submitted an approvable attainment demonstration with any necessary, adopted local measures, and with an attainment date that shows it will attain the 1-hour standard no later than the date that the emission reductions are expected from upwind areas in the final NO_X SIP call and/or the statutory attainment date for upwind nonattainment areas, *i.e.*, assuming the boundary conditions reflecting those upwind emission reductions;

3. Has adopted all applicable local measures required under the area's current ozone classification and any additional emission control measures demonstrated to be necessary to achieve attainment, assuming the emission reductions occur as required in the upwind areas; and

4. Has provided that it will implement all adopted measures as expeditiously as practicable, but no later than the date by which the upwind reductions needed for attainment will be achieved.

IX. How Did Louisiana Satisfy the Criteria for an Attainment Date Extension?

Louisiana satisfied the criteria for an attainment date extension as follows:

1. EPA finds that Louisiana has demonstrated that it is a downwind area affected by transport from the Houston area and that Houston contributes to the Baton Rouge area's ozone nonattainment;

2. As explained elsewhere in this notice, EPA finds that the State of Louisiana has submitted an approvable attainment demonstration that provides for attainment no later than the date emissions reductions are expected from the upwind area. Furthermore, all of the control measures needed for attainment have been adopted and submitted to EPA. These measures include all serious area requirements under section 182(c).

3. EPA has determined that Louisiana has adopted local measures required by the Act for the area's current classification as a serious nonattainment area. See Louisiana's SIP submittals and 67 FR 50391 (August 2, 2002) and the references cited therein for a discussion of the local measures adopted by the State.

4. With respect to implementation of all adopted measures as expeditiously as practicable but no later than the time upwind controls are expected, Louisiana has demonstrated to EPA that all control measures would be in place by November 15, 2005. This is two years in advance of the Houston, Texas, upwind area that is contributing to the Baton Rouge area's nonattainment. Since the local measures adopted by Louisiana necessary for attainment will be implemented no later than 2005 and EPA finds that they will be implemented as expeditiously as practicable, the State has shown that this element of the attainment date extension policy has been satisfied.

EPA therefore concludes, consistent with the attainment date extension policy, the State has met the criteria for an attainment date extension. EPA is thus extending the attainment date for the Baton Rouge area to November 15, 2005, to allow the upwind reductions to occur before attainment is required. Additional background information on EPA's attainment date extension policy can be found in the following **Federal Register** notices:

64 FR 14441 (March 25, 1999)
64 FR 12284 (March 18, 1999)
64 FR 18864 (April 16, 1999)
64 FR 27734 (May 21, 1999)
64 FR 70459 (December 16, 1999)
65 FR 20404 (April 17, 2000)
66 FR 585 (January 3, 2001)

66 FR 634 (January 3, 2001)
66 FR 666 (January 3, 2001)
66 FR 17647 (April 3, 2001)
66 FR 20122 (April 19, 2001)
66 FR 26913 (May 15, 2001)
66 FR 33996 (June 26, 2001)
67 FR 30574 (May 7, 2002)

EPA received comments regarding the basis for and application of the extension policy in granting the Baton Rouge ozone nonattainment area an attainment date extension. Those comments and our responses to comments are summarized elsewhere in this document.

X. What Action Is EPA Taking Regarding the Determination of Nonattainment as of November 15, 1999, and Reclassification Published on June 24, 2002?

On May 10, 2000, the Governor of Louisiana requested an attainment date extension for the Baton Rouge area. On May 9, 2001, EPA proposed its finding that the Baton Rouge area did not attain the 1-hour ozone NAAQS by the applicable attainment date (66 FR 23646). In that proposed action, we also stated that Louisiana was seeking an extension of its attainment date pursuant to EPA's attainment date extension policy. EPA proposed to take final action on the determination of nonattainment and reclassification of the Baton Rouge area only after the area had received an opportunity to qualify for an attainment date extension under the attainment date extension policy. Louisiana submitted an Attainment Plan/Transport SIP on December 31, 2001, for the Baton Rouge area. EPA was in the process of reviewing the Attainment Plan/Transport SIP when, on March 7, 2002, the United States District Court for the Middle District of Louisiana entered a Judgment ordering EPA to determine, by June 5, 2002, whether the Baton Rouge area had attained the applicable ozone standard under the CAA. *LEAN* v. *Whitman*, No. 00–879–A. In compliance with the Court's Order, EPA signed on June 5, 2002, and published in the **Federal Register** on June 24, 2002, (67 FR 42688) our determination that the Baton Rouge area did not attain the 1-hour ozone standard by November 15, 1999.

On June 24, 2002, EPA published its ''Determination of Nonattainment as of November 15, 1999, and Reclassification of the Baton Rouge Ozone Nonattainment Area; State of Louisiana; Final Rule'' (67 FR 42688). The effective date of that Determination and Reclassification was initially set at August 23, 2002. However, in a separate notice the same day (67 FR 42697), EPA proposed to extend the effective date of the Determination and Reclassification until October 4, 2002. On August 20, 2002 (67 FR 53882), EPA finalized the modification of the effective date of the Determination of Nonattainment as of November 15, 1999, and Reclassification of the Baton Rouge Ozone Nonattainment Area, extending it until October 4, 2002.

In our August 2, 2002, **Federal Register** document (67 FR 50391), EPA proposed to withdraw the Notice of Determination of Nonattainment and Reclassification if we approved an attainment date extension prior to the effective date of the Determination of Nonattainment. As noted in our August 2, 2002, proposal, EPA believes this is appropriate for a number of reasons.

Since we are today granting an extension until November 15, 2005, for attainment of the 1-hour ozone standard, EPA's obligation under section 181(b)(2)(A) of the Act to determine attainment is thereby shifted into the future. As a result, we are hereby withdrawing the published nonattainment determination and the consequent reclassification, which has not yet gone into effect. Therefore, the Baton Rouge area retains its classification as a serious ozone nonattainment area. As stated previously, comments on our proposal to extend the attainment date are addressed below. In today's action, we are withdrawing the Notice of Nonattainment Determination and Reclassification, prior to its becoming effective. EPA received adverse comments relating to our proposal to withdraw the nonattainment determination and consequent reclassification in the event we granted an attainment date extension. Those adverse comments are addressed below in this document.

XI. What Comments Were Received on the Proposals Covered by This Final Action, and on the March 25, 1999, Publication of the Attainment Date Extension Policy, and How Has EPA Responded to Those?

EPA received comments from the public on the Notices of Proposed Rulemaking published on May 9, 2001; June 24, 2002; and August 2, 2002, for the proposed approval of the Baton Rouge's ozone attainment demonstration and attainment date extension. EPA received adverse comments from Tulane and LEAN for our May 9, 2001 and the August 2, 2002, proposals. We received adverse comments from Earthjustice on our August 2, 2002, proposal. EPA also received comments in support of the proposals from 24 commenters.

EPA sets forth below in this section our responses to adverse comments received on these notices which are relevant to this rulemaking. EPA also received comments relating to the proposal to determine that the Baton Rouge area did not attain the ozone standard by November 15, 1999. These comments relate primarily to the necessity of making the nonattainment determinations, and the appropriate attainment date if the area were reclassified. In EPA's June 24, 2002, final rule, EPA responded to adverse comments on the proposed determination that the area did not attain the standard by November 15, 1999, and finalized the reclassification to severe nonattainment. (67 FR 42688, 42693–42695). The effective date of that action was extended to October 4, 2002. Today we are withdrawing our June 24, 2002, final rule.

Finally, some of the comments received in Docket A–98–47 on EPA's notice regarding ''Extension of Attainment Dates for Downwind Transport Areas'' 64 FR 12221 (March 25, 1999), are relevant to this rulemaking. EPA incorporates its responses to those comments, set forth in 66 FR 586, 66 FR 634, 66 FR 666 (January 3, 2001), and 66 FR 26913 (May 15, 2001), 66 FR 33996 (June 26, 2001), 66 FR 33996 (June 26, 2001), and 67 FR 30574 (May 7, 2002), insofar as herein relevant.

The following discussion summarizes and responds to all adverse comments:

Comments Received in Response to the May 9, 2001 (67 FR 23646), Proposal

Comment 1: Eleven comment letters were received with statements of support for EPA's proposed eligibility for a transport-based attainment date extension. Two comment letters were received in opposition to the transport-based attainment date extension. The commenters in support believed that the Baton Rouge area was affected by the transport of ozone from the Houston-Galveston, Texas, nonattainment area (hereinafter referred to as Houston). The commenters in opposition believed that either the Baton Rouge area did not meet the conditions under EPA's transport-based attainment date extension policy, that the time for making an attainment determination was overdue, and/or the Act did not give EPA the authority to grant the transport-based attainment date extension.

Response 1: In this final rule, EPA responds to the relevant adverse comments on EPA's legal authority to extend the Baton Rouge area's attainment date received in response to

that proposal. The responses to comments in a number of prior rulemakings concerning the attainment date extensions granted in Washington, DC, Springfield, Massachusetts, Greater Connecticut, Beaumont, Texas, the St. Louis area, and Atlanta, Georgia, are relevant and responsive to the comments received on Baton Rouge. In those prior rulemakings, EPA responded to similar challenges to the legality of the attainment date extension policy, and EPA therefore incorporates its responses to those comments, set forth in 66 FR 586, 66 FR 634, 66 FR 666 (January 3, 2001), 66 FR 26913 (May 15, 2001), 66 FR 33996 (June 26, 2001), and 67 FR 30574 (May 7, 2002), insofar as herein relevant.

Many of the legal arguments and other issues raised in the comments addressing the attainment date extension proposed in Baton Rouge have also been addressed in the briefs EPA has filed in litigation concerning the extensions in Washington, DC *Sierra Club* v. *Whitman,* Nos. 01–1070 (DC Cir.), St. Louis, *Sierra Club* v. *EPA* 01–2844, No. 01–2845 (7th Cir.), Sierra Club v. Whitman, Nos. 01–5123 and 01–5299 (DC Cir.), and Beaumont, *Sierra Club* v. *EPA,* No. 01–60537 (5th Cir.). These briefs have been placed in the docket for this rulemaking and are incorporated herein by reference.

Commenters cite to prior case law in support of such propositions as: a list of specific remedial provisions excludes the possibility of inferring that Congress intended any additional forms of relief; an agency cannot substitute its policy choices for those of Congress; the attainment deadlines are central to the CAA and cannot be adjusted. EPA has previously set forth its views on these issues in its prior responses and in its briefs. None of the cases or arguments cited by the commenters alters these views, or undermines EPA's authority to interpret the text of the statute in its full context so as to give effect to Congressional intent. EPA is implementing the attainment date extension not as a mere Agency policy preference, but in order to fulfill Congressional intent. Moreover, even in the absence of explicit statutory authority, EPA may grant extensions of time under the CAA where it concludes that Congress would have done the same had it foreseen the circumstances presented. *NRDC* v. *EPA, 22 F.3d 1125 (D.C. Cir. 1994).*

Please see the responses to related comments concerning Baton Rouge's eligibility for an extension in the comment section below.

Comments Received in Response to the August 2, 2002 (67 FR 50391), Proposal

Twenty-seven comment letters were received on our August 2, 2002, proposed approval rulemaking. Of these twenty-seven letters, we received four comment letters with adverse comments dealing with our proposed action.

Comment 2: One commenter contends that EPA lacks statutory authority to approve the request for an attainment date extension based on EPA's attainment date extension policy. The commenter asserts that the current classification for the Baton Rouge area is ''severe'' and not ''serious.'' The commenter contends that EPA has already determined that the area failed to attain the ozone standard within the meaning of section 181(b)(2)(A) of the Act, and that, therefore, the Baton Rouge area was reclassified by operation of law, despite EPA's refusal to acknowledge this. The commenter incorporates by reference its arguments as to the legality of the attainment date extension policy contained in its briefs in *Sierra Club* v. *EPA,* 294 F.3d 155, 160–162 (DC Cir. 2002); Opening and Reply Briefs of Sierra Club in Sierra Club v. EPA, DC Cir. 01–1070, at Part I; Earthjustice Comments dated April 26, 1999, addressing EPA's proposal entitled ''Extension of Attainment Dates for Downwind Transport Area.'' 64 Fed. Reg. 14441 (March 25, 1999); Transcript of Oral Argument in *Sierra Club* v. *EPA,* DC Cir. 01–1070 (February 4, 2002).

Response 2: EPA has responded to the contentions regarding the legality of EPA's attainment date extension policy in its responses to comments on the May 9, 2001, proposed rulemaking. As to the assertion that the classification of the Baton Rouge area is ''severe'' and not ''serious,'' EPA, prior to the Court-ordered rulemaking published on June 24, 2002, had issued no final rulemaking determining that the Baton Rouge area had not attained the standard by November 1999. Therefore, the Baton Rouge area was not reclassified to ''severe.'' Moreover, since EPA is today issuing a final attainment date extension and withdrawing its June 24, 2002, determination prior to that determination taking effect, the Baton Rouge area remains classified as a serious area. EPA incorporates its responses to the comments contained in its briefs in the cases cited above.

Comment 3: One commenter argues that the DC Circuit has decided adversely to the attainment date extension, and that similar cases are pending before the Seventh Circuit and before the Fifth Circuit, which is considering this issue in the *Sierra Club* v. *EPA,* (No. 01–60537), argued September 4, 2002. EPA should await the outcomes of those cases. The fact that the Louisiana SIP provides for RACM and ROPP does not fix the proposed rules shortfalls. The area should still be reclassified.

Response 3: While the DC Circuit has issued a decision concerning Washington, DC, EPA nevertheless believes that its approach is justified and is currently continuing to litigate the pertinent legal issues in two other Circuits. The Seventh Circuit has yet to rule on the attainment date extension issue with regard to the St. Louis area, and the Fifth Circuit, which would have jurisdiction to review EPA's rulemaking regarding Baton Rouge, has yet to rule on the attainment date extension issue in the context of Beaumont, Texas. When these Circuits issue their decisions in these cases, EPA will reevaluate its position with respect to Baton Rouge.

Comment 4: Commenters claim that on two occasions—on separate amendments offered by Senator Kasten in 1990 and Senator Levin in 1994, Congress rejected amendments to the Clean Air Act providing for attainment date extensions.

Response 4: Neither amendment cited by commenters corresponds with EPA's attainment date extension policy, and there is no evidence that either was acted upon by Congress. In its prior rulemaking notices and briefs EPA has answered the arguments that the commenters raised on the Kasten amendment. As to the Levin amendment cited by commenters, this bill did not address attainment date extensions, but rather a revision to section 182(h)(1) concerning rural transport areas that was aimed at original classifications. This proposed amendment did not propose attainment date extensions, but rather dealt with areas that made no significant contribution to their own ozone concentrations, and proposed to treat them as rural transport areas. In offering this amendment, Senator Levin expressly noted that EPA was grappling with the issue of other areas, whose air quality is affected by the area's own emissions as well as those from upwind areas. Senator Levin's bill did not address this situation, because he acknowledged EPA's plans ''to issue a new policy on ozone transport that will hold areas responsible only for that portion of the ozone problem which they cause.'' However, this new policy is expected to only correct another inequity in the act, the fact that downwind areas suffering from significant ozone and other pollution

transported from more severely polluted areas have less time to achieve attainment. The change in attainment deadlines will not address the problem of areas inappropriately designated in the first place. 140 Cong. Rec. S10538–05 (August 3, 1994).

Comment 5: Commenters contend that it is too late for Louisiana to apply for a transport extension, and that any application for an extension should be denied on the failure of the state to submit a timely application for an extension and for failure to meet the requirements of the attainment date extension in a timely fashion.

Response 5: EPA disagrees that it is too late to grant Louisiana an attainment date extension. First, Louisiana is not applying for an attainment date extension under section 181(a)(5), but in accordance with EPA's transport-based attainment date extension policy. EPA believes that the area timely applied for an attainment date extension pursuant to EPA's attainment date extension policy and that it has made the requisite showing for an extension based upon transport. In its notice of proposed rulemaking EPA set forth the history of this rulemaking action and also noted that EPA had provided additional time for the area to submit documentation in support of its request for an attainment date extension. 67 FR 50391 (August 2, 2002); 66 FR 23646 (May 9, 2001), 66 FR 38608 (July 25, 2001) (supplemental proposed rule). As EPA noted in its final rulemaking of June 24, 2002 (67 FR 42697), Footnote 3, EPA received no adverse comments on its supplemental proposal to extend Louisiana's transport SIP submission date to December 31, 2002.

Comment 6: Congress foresaw the problem of ozone transport and provided a solution under sections 110 and 126. Louisiana never petitioned EPA under section 126 for a finding that sources in Texas significantly contributed to ozone problems in Baton Rouge.

Response 6: As EPA has noted in prior rulemakings, because a functional understanding of transport was late in coming, the tools envisioned by Congress could not be deployed in time to provide the intended relief. The commenter's contention that EPA should not grant Baton Rouge an attainment date extension because Louisiana should have acted earlier to commence a section 126 petition proceeding to reduce emissions from upwind states ignores the fact that an adequate analysis and allocation of responsibility for transport did not exist in time to support relief by the area's original attainment date. EPA incorporates by reference its responses to the comments contained in its briefs in the cases cited above.

Comment 7: Commenters argue that EPA should not approve the RACM analysis for the Baton Rouge area because it does not meet the requirements of the CAA. They also argue that the State and EPA cannot lawfully limit RACM analyses to only those measures likely to advance attainment dates, nor can they lawfully apply an ''intensive and costly effort'' test. Opening and Reply Briefs of Sierra Club in *Sierra Club* v. *EPA,* DC Cir. 01–1070, at Part II. The commenter adds that even if that were not the case, *arguendo,* the states and EPA must still consider a reasonable range of potential RACM measures, and to the extent that they reject measures as allegedly not constituting RACM, must offer a reasoned and statutorily permissible explanation for doing so. Another commenter argues that control measures are clearly available. The commenters go on to state that: (1) There are many stationary VOC emissions to work with, and (2) many industries in the nonattainment area are reducing their VOC emissions from stationary sources. Since these facilities are actually making these reductions, the commenter concludes that the SIP argument that VOC reductions at this time are deemed to be technologically infeasible is clearly incorrect. The commenter further states that the LDEQ refers to computer modeling results in the SIP to imply that the requirements of RACM in the CAA can be avoided.

Response 7: Louisiana performed a RACM analysis for potential control of NO_X and VOC emission sources not included in the attainment demonstration for the Baton Rouge 1-hour ozone attainment area. Each control measure option was evaluated according to: (1) The State's authority to implement controls; (2) the amount of NO_X reductions created by the control measure; (3) the amount of VOC reductions created by the control measure; (4) whether a similar control measure is already being implemented in the SIP; (5) the cost effectiveness of the control; (6) whether SIP credit has already been taken for the measure; and (7) whether the measure can be implemented to advance the attainment date. LDEQ conducted analyses of the reductions available from control of VOC and NO_X emissions from on-road and off-road mobile sources, major stationary sources of VOC and NO_X, and VOC and NO_X area sources.

In our August 2, 2002, proposed approval, EPA referenced the methodology Louisiana employed to analyze transportation control measures (TCM) RACM for mobile sources. Louisiana's analysis is explained in Chapter 5 of the SIP. LDEQ analyzed a broad range of TCMs identified and listed in section 108(f) of the Act for RACM availability. As part of its analysis, LDEQ relied on the most recent and comprehensive TCM evaluation study that exists for the Baton Rouge area and reflects updated attainment year vehicle miles traveled (VMT) and emissions reduction estimates. Based on its analysis, LDEQ included in the SIP an enforceable TCM to implement an advanced transportation management system and a vehicle I/M program. Relative to the total NO_X reductions required to demonstrate attainment of the 1-hour ozone NAAQS in the Baton Rouge area, additional NO_X reductions from other TCMs in the Baton Rouge area that might be implemented constitute a very small percentage (approximately 1%) of the total reductions required for attainment. Thus, LDEQ concluded, an EPA agrees, that for RACM purposes implementation of additional TCMs would not produce emissions reductions sufficient to the advance the attainment date.

Louisiana also analyzed control options as RACM for major stationary sources of VOC and NO_X. Louisiana has implemented Reasonable Available Control Technology (RACT) for major stationary sources of NO_X and VOC. As the commenter notes, many industries in the Baton Rouge area are already reducing their VOC emissions from stationary sources to meet the VOC RACT requirements of the Act. The 24% rate-of-progress VOC emissions reductions required under the Act have already been achieved in the Baton Rouge area. Modeling analysis for the Baton Rouge area indicates that a 30% ''across the board'' reduction in VOC emissions yields less than a 1 ppb decrease in the ozone peak for all three modeled episodes. Based on its analysis, LDEQ concluded that VOC reductions beyond those already in place would not be sufficient to bring the area into attainment sooner than 2005 and were not technologically feasible or cost effective at this time. Furthermore, the modeled attainment demonstration shows that the Baton Rouge area relies upon emissions reductions from outside of the attainment area and from federal rules with implementation dates that will not occur until 2005. LDEQ performed a similar analysis for NO_X RACM. EPA has reviewed and agrees with the State's RACM analysis. For further details concerning Louisiana's

RACM analysis please refer to the RACM TSD and LDEQ's RACM analysis.

The EPA's approach toward the RACM requirement is grounded in the language of the CAA. Section 172(c)(1) states that a SIP for a nonattainment area must meet the following requirement: ''In general.—Such plan provisions shall provide for the implementation **of all reasonably available control measures as expeditiously as practicable** (including such reductions in emissions from existing sources in the area as may be obtained through the adoption, at a minimum, of reasonably available control technology) and **shall provide for attainment of the national primary ambient air quality standards**.'' [Emphasis added.] The EPA interprets this language as tying the RACM requirement to the requirement for attainment of the national primary ambient air quality standard. The CAA provides that the attainment date shall be ''as expeditiously as practicable but no later than * * *'' the deadlines specified in the CAA. EPA believes that the use of the same terminology in conjunction with the RACM requirement serves the purpose of specifying RACM as the way of expediting attainment of the NAAQS in advance of the deadline specified in the CAA. As stated in the ''General Preamble'' (57 FR 13498 at 13560, April 16, 1992), ''The EPA interprets this requirement to impose a duty on all nonattainment areas to consider all available control measures and to adopt and implement such measures **as are reasonably available for implementation in the area** as components of the area's attainment demonstration.'' [Emphasis added.] In other words, because of the construction of the RACM language in the CAA, EPA does not view the RACM requirement as separate from the attainment demonstration requirement. Therefore, EPA believes that the CAA supports its interpretation that measures are not RACM if they do not advance the attainment date. In addition, EPA believes that it would not be reasonable to require implementation of measures that would not in fact advance attainment (see 57 FR 13560). EPA has historically taken this interpretation and consistently implemented it through guidance since 1979 (see 44 FR 20372, 20375, April 4, 1979).

The term ''reasonably available control measure'' is not actually defined in the CAA. Therefore, the EPA interpretation that potential measures are not to be RACM if they require an intensive and costly effort for numerous small area sources is based on the common sense meaning of the phrase, ''reasonably available.'' A measure that is reasonably available is one that is technologically and economically feasible and that can be readily implemented. Ready implementation also includes consideration of whether emissions from small sources are relatively small and whether the administrative burden, to the States and regulated entities, of controlling such sources was likely to be considerable. As stated in the General Preamble, EPA believes that States can reject potential measures based on local conditions including cost. 57 FR 13561.

When EPA presented this statutory argument in support of its RACM policy to the U.S. Court of Appeals for the DC Circuit in defense of its approval of the Washington DC ozone SIP, the DC Circuit found reasonable EPA's interpretation that measures must advance attainment to be RACM. *Sierra Club* v. *EPA,* 294 F.3d 155, 162 (DC Cir. 2002). Specifically, the Court found that:

> EPA reasonably concluded that because the Act 'use[s] the same terminology in conjunction with the RACM requirement' as it does in requiring timely attainment, *compare* 42 U.S.C. 7502(c)(1) (requiring implementation of RACM 'as expeditiously as practicable but no later than' the applicable attainment deadline), *with id.* § 7511(a)(1) (requiring attainment under same constraints), the RACM requirement is to be understood as a means of meeting the deadline for attainment.

Id. Moreover, the DC Circuit rejected, as a ''misreading of both text and context,'' Sierra Club's arguments that EPA's interpretation of RACM conflicts with the Act's text and purpose and lacks any rational basis.

Also, LDEQ's analysis indicates that the development of rules for a large number of very different source categories of small sources for which little control information may exist will likely take much longer than development of rules for source categories for which control information exists or that comprise a smaller number of larger sources. It is less likely that the emission reductions from such additional rules in the nonattainment area would advance the attainment date more than emission reductions achieved from controls on major stationary sources, mobile sources, and federal rules in the Baton Rouge area. Thus, it is of greater value and more expeditious for the State to expend the administrative effort and costs to pursue larger reductions from a smaller number of sources.

When EPA presented this statutory argument in support of its RACM policy to the DC Circuit in defense of its approval of the Washington DC ozone SIP, the DC Circuit also found reasonable EPA's interpretation that it could consider costs in a RACM analysis and that measures may be rejected if they would require an intensive and costly effort for regulation of many small sources. *Sierra Club* v. *EPA,* 294 F.3d at 162, 163.

Finally, the SIP does not, as the commenter claims, imply that the requirements of RACM in the CAA can be avoided in the nonattainment area based on the attainment modeling. The SIP merely notes that the attainment modeling along with the proposed NO_X reductions from major stationary sources, mobile sources and federal rules are shown to be sufficient for the Baton Rouge area to meet the NAAQS for ozone by 2005, and that there are no additional RACM to advance the attainment date. We do not consider measures as RACM for the Baton Rouge area if they do not advance the attainment date, as recently upheld by the DC Circuit Court. We are still requiring the State to demonstrate that all local measures that are RACM are implemented as expeditiously as practicable.

Comment 8: A commenter states that EPA cannot lawfully approve SIPs which lack rate of progress reductions for the full period by the CAA—which includes not just the reductions required during the period up to November 15, 1999, but also 9% VOC reductions from November 15, 1999 to November 15, 2002, and another 9% reductions from November 15, 2002 to November 15, 2005. Another commenter states that the SIP must include reductions until the area achieves its attainment date. The commenter concludes that since the attainment date is extended, the reasonable further progress demonstration required in Section 182(c)(2)(B) must be included in any approvable SIP. A commenter asserts that the CAA does not allow for the revisions to the 15% ROPP, the 1990 Base Year Emission Inventory, nor the Post-1996 ROPP because the CAA does not allow ROPP reductions to occur outside the nonattainment area. Additionally, the commenter states that in order for Louisiana to take credit for the emission reductions outside the nonattainment area the State must prove that the reductions would result in actual reductions in ozone within the attainment area. The commenter concludes that LDEQ did not specifically model emissions reductions from Trunkline and therefore should not be allowed to include these credits in its ROPP. Finally, the commenter argues

that the reductions have already occurred and since the area remains in nonattainment after these reductions then the reductions obviously are not going to solve the ozone problem and can not be considered progress. The commenter also incorporates by reference comments submitted by LEAN on EPA's proposed approval of Louisiana's contingency measures dated May 20, 2002.

Response 8: EPA's guidance did not interpret the period of time after granting the attainment date extension based on transport as requiring additional rate of progress increments from the downwind area, since we determined that the reason the area had not attained was due to upwind transport. Consistent with the purposes of the attainment date extension policy, EPA believes it would be inequitable to require areas in which attainment is affected by transport to meet additional local ROPP requirements. EPA believes it would be unreasonable to require the downwind area into such progress requirement reductions from local sources, when the combination of local reductions with upwind area source emission reductions is what will bring the area into attainment. In any event, to the extent that it should be determined otherwise, and that any ROPP required should be imposed on the downwind area, this would not be required until EPA grants the attainment date extension and provides the area with a later attainment date. Since the requirement was not previously due, fulfilling the requirement, if any is deemed to exist, is not a condition of receiving the attainment date extension. Responses to Louisiana's contingency measures are being addressed in the **Federal Register** final action for that component of the SIP.

In reference to the comment concerning the modeling of the emission reductions from Trunkline, the commenter is referred to the above mentioned December 29, 1997, EPA guidance document. Pages 5 and 6 of the guidance document discuss EPA's guidance on ROPP. EPA's guidance ''* * * only requires that an area in nonattainment for the 1-hour NAAQS should be allowed to take credit for emissions reductions obtained from sources outside the designated nonattainment area for the post-1999 ROP requirement as long as the sources are no farther than 100 km (for VOC sources) or 200 km (for NO_X sources) away from the nonattainment area.'' The guidance does not indicate that modeling of ROPP emissions should be conducted for EPA to allow the use of ROPP emissions within 100km (VOC) and 200km (NO_X) of the nonattainment area. Trunkline's emissions changes are included in the overall modeling analysis, and the results show that emission reductions are necessary in the surrounding attainment parishes for the Baton Rouge nonattainment area to demonstrate attainment. Domain-wide modeling, rather than source specific modeling of facility emission changes such as Trunkline's, is used to tell us what level of reductions are needed for the nonattainment area to demonstrate attainment.

Comment 9: One commenter asserts that EPA cannot lawfully approve SIPs that lack contingency measures. The commenter further states that as shown in the commenter's *Sierra Club* v. *EPA* briefs, contingency measures must be additional measures that activate in the event of a contingency, not surplus reductions from measures being implemented anyway (*e.g.*, as part of the attainment rate-of-progress SIP). *Sierra Club,* 294 F.3d at 164; Opening and Reply Briefs of Sierra Club in *Sierra Club* v. *EPA,* DC Cir. 01–1070, at Part IV.

Response 9: EPA has found the contingency measures in the SIP to be surplus, permanent and federally enforceable. EPA is approving these contingency measures in a separate action which published in the **Federal Register** on September 26, 2002. See EPA's final action on the contingency measures for responses to related comments.

Comment 10: A commenter states that EPA should not withdraw its June 24, 2002, rulemaking determining that Baton Rouge was in nonattainment and reclassifying it from ''serious'' to ''severe'' because to do so would be against both the plain language of the CAA and Congressional intent.

Response 10: EPA is withdrawing its June 24, 2002, rulemaking relating to the Baton Rouge reclassification based on Louisiana fulfilling EPA's attainment date extension policy and EPA's approval of their attainment demonstration and transport SIP. See related responses on EPA's attainment date extension policy above.

Comment 11: The commenter indicates that it is a poor idea to adopt contingency measures that require emission reductions outside the nonattainment area.

Response 11: The CAA gives the states considerable latitude and discretion in adopting state implementation plans. The CAA also recognizes that addressing ozone nonattainment within a given area may involve regulation of emissions from sources outside of the nonattainment area. See CAA sections concerning international pollution (42 U.S.C. 7415), interstate transport commissions (42 U.S.C. 7506a), and interstate pollution abatement (the so-called ''good neighbor'' section, 42 U.S.C. 7426). Since a state may petition the EPA to regulate sources beyond the state's boundaries in order to address a nonattainment area within the state, the state is certainly free to regulate precursor emissions outside the nonattainment area, but still within the state, that impact the nonattainment area. Furthermore, LDEQ did conduct a modeling sensitivity run (Run LA–1) to evaluate the effectiveness of a 30% NO_X reduction in low-level and elevated sources in Grid D. This modeling sensitivity run demonstrated that additional reduction in the simulated ozone concentrations and 1-hour ozone exceedance exposure within the 5 parish nonattainment area is obtained from NO_X emission reductions within Grid D from parishes that are outside the nonattainment area.

Comment 12: One commenter suggests that the Classification and Regression Tree (CART) analysis does not demonstrate that there is a significant problem with ozone transport. Another commenter indicated that the state used an insufficient amount of data (5 years vs. 20 years) in determining the ranking system to calculate expected ozone exceedances (ExEx), leading to uncertainty about the reliability of the conclusions reached based on these data.

Response 12: The CART analysis was conducted to support the episode selection portion of the Baton Rouge local modeling analysis. The CART analysis that was done for the local modeling analysis was not specifically designed to identify regional transport conditions. In addition to a transport analysis, the attainment demonstration must address whether or not local measures are needed for attainment. If the attainment demonstration indicates that local control measures are required, the demonstration must quantify the level of the needed local emission reductions. For the local portion of the attainment demonstration, the episodes modeled were to be primarily ''home-grown,'' rather than dominated by transport. Thus, the meteorological and air quality data used in the CART analysis to characterize potential modeling episodes were all *local* Baton Rouge data. (The only non-Baton Rouge data was the upper air data obtained from near-by Slidell, Louisiana, which has the closest radar profiler.) This particular CART analysis did not consider other parameters that may have been more indicative of regional

transport (*e.g.* surface winds at Calcasieu, Lafayette, etc.).

Although the use of *local* Baton Rouge data alone is not sufficient to fully characterize regional transport conditions in Louisiana and neighboring states, the CART analysis approach was a component relied upon, to demonstrate the frequency of transport. Meteorological and air quality data for a five-year period (1996–2000) were also characterized and analyzed. The results indicated that 7 percent of the Baton Rouge exceedance days (*i.e.*, 2 out of 28 exceedance days) were potentially associated with transport of ozone and/or precursor pollutants from the Houston area. EPA believes these data demonstrate a sufficient impact from Houston to satisfy the criteria of our attainment date extension policy. Another CART analyses of frequently occurring meteorological conditions during ozone exceedances for a 10 year period (1989–1998) indicated that a ''Gulf-High'' regime was associated with 30% of the Baton Rouge exceedance days during that period. A ''Gulf-High'' existed in the modeled August 19, 1993 episode. This modeling demonstrated that transport of emissions from the Houston area to the Baton Rouge area. The impact from the Houston area upon the Baton Rouge area's ozone concentration was 2–6 ppb.

We disagree that the State used insufficient data in determining the ranking system. The CART analysis approach to characterizing episodes and ranking them on the basis of severity is an alternate approach that has been accepted by EPA for other 1-hour ozone SIP modeling applications. These include Atlanta, Georgia, Birmingham, Alabama, and Louisville, Kentucky. The approach provided in EPA guidance (Cox and Chu) uses meteorological data of a twenty-year record. Under the same meteorological conditions, expected ozone concentrations would possibly be very different if the magnitude or ratios of the VOC and NO_X emissions are different. Over the last 20 years the effect of Federal and state regulations have resulted in changes in ratios/quantities of VOC and NO_X anthropogenic emissions in the Baton Rouge area. Thus, the CART approach applied in the Baton Rouge SIP modeling analysis takes into account only the most recent 5 years of data. This approach is followed in an attempt to avoid potential complications inherent in assessing correlations between meteorological conditions and the observed concentrations when a major influencing variable (*i.e.* emissions inventory) has likely changed over a longer period, such as twenty years.

Comment 13: The ''gulf-high'' conditions associated with transport do not demonstrate that the Baton Rouge area is suffering from transport from the Houston-Galveston area.

Response 13: We disagree. The August 19, 1993, episode was a ''Gulf-High'' regime day, and the modeling results demonstrated that the Houston area significantly contributed to the Baton Rouge area. This modeling showed an impact of 2–6 ppb on ozone concentrations in the Baton Rouge area. CART analysis approach also characterized this episode as ''Gulf-High'' regime. We agree that the relative positioning of the center of the high pressure zone in the Gulf of Mexico as well as the strength of circulation winds determine whether or not transport from the Houston area occurs and the level of impact of the transported emissions when transport occurs. Because of these considerations,transport from Houston to Baton Rouge does not always occur under all conditions labeled ''gulf-high''.

Even so, the important point is that on many exceedance days, the Baton Rouge and surrounding areas have experienced meteorological conditions under which transport from Houston could have contributed to the exceedance. Some 30% of the exceedances in a ten-year period, and some 7% of the exceedances in a 5-year period, were associated with ''Gulf-High'' days. It is reasonable to conclude that some appreciable portion of the gulf-high days were conducive to transport from Houston.

Similarly, other meteorological regimes may be conducive to transport from Houston. These include ''coastal return'' days and ''continental high'' days as discussed further in the Technical Support Document. These meteorological regimes may also allow for transport from Houston. Because they are common regimes, it is reasonable to assume that some occurred on exceedance days. Further, it is reasonable to assume that on some of those days, transport from Houston occurred.

This information concerning the meteorological regimes must be considered together with modeling that specifically identifies transport from Houston, as discussed elsewhere.

Accordingly, although the data is insufficient to quantify specifically the number of exceedance days with meteorological regimes conducive to transport from Houston, and the number of days in which transport from Houston actually occurred, EPA believes that the data is sufficient to support a conclusion that transport from Houston occurred frequently enough, since the Baton Rouge area is only allowed 3 exceedances in a 3-year period, to adversely affect the area's ability to attain. Thus for Baton Rouge to attain, controls in Houston area, as well as in Louisiana, are necessary. Louisiana has demonstrated that during some Baton Rouge area exceedances, ozone levels are influenced by emissions from the Houston area, and that the Houston area emissions affect the Baton Rouge area's ability to meet attainment of the 1-hour ozone standard by November 15, 1999.

Comment 14: Modeling used by the State (based on August 19, 1993) does not demonstrate that the Baton Rouge area is suffering from ozone transport. Another commenter indicated that EPA's own data do not show a significant effect on Baton Rouge from Houston's air pollution.

Response 14: We disagree. The August 19, 1993, modeling results demonstrated that the Houston area significantly contributed to the Baton Rouge area. This modeling showed an impact of 2–6 ppb on ozone concentrations in the Baton Rouge area when the Houston area emissions are zeroed out. A ''Gulf-High'' existed during the modeled August 19, 1993 episode. The August 1993 episode occurred during the Gulf of Mexico Air Quality Study (GMAQS) field program and the modeling of that episode benefitted from intensive, enhanced ground level, upper-air, and aircraft measurements. The episode consisted of a ramp up day on August 18th and a primary episode day on August 19th. Due to the influence of the initial and boundary conditions, EPA guidance does not recommend the State to take the ramp-up day (*i.e.*, August 18th) into consideration in developing a control strategy. The observed regional conditions, including the additional meteorology measurements from the field study, during this period were found to be conducive for potential transport of pollutants from the Houston area to the Baton Rouge 5-parish nonattainment area. CART analyses indicate that transport conditions have occurred historically and one episode (the August 19, 1993) has been modeled to demonstrate transport.

In addition, a modeling run was conducted for a period in 1997 (8/30–31) in which not only Houston area emissions, but also Beaumont Port-Arthur emissions were zeroed out. This run indicated impacts from the zero-out in a north-northeasterly direction from southeast Texas, with a 10 ppb impact in Little Rock which is approximately

twice the distance from southeast Texas to Baton Rouge. The run lends support to the conclusion that Houston contributes to exceedances in the Baton Rouge area. A relatively small shift in the direction of the winds during the period modeled may have resulted in a bigger impact in the Baton Rouge area, which supports the conclusion that some of the exceedances in the Baton Rouge area experienced contributions from Houston. The commenter refers to EPA's ''own data'' in the proposed notice where it states that 7% of the ozone exceedances in a five year period were associated with ''gulf-high'' met regime with high level westerly winds. This statement was derived from the Baton Rouge SIP's record. It is only one component of the information that EPA has looked at in determining that the Baton Rouge area is impacted by transport for Houston area emissions. EPA has made a judgement that the frequency of occurrence for transport of Houston's air pollution is significant enough to be of concern in Baton Rouge. Baton Rouge's ability to attain is affected by the impact on it from the Houston area, as documented above. For further information, see the Technical Support Document and the State's submittals.

Comment 15: Table 1–3 of Louisiana's SIP shows that the model drastically over-predicts the amount of ozone that was actually formed on August 18 and 19, 1993, in the Baton Rouge area based upon the ''Unpaired accuracy of the peak concentration'' metric.

Response 15: The model does not drastically over-predict taking into account all of the metrics and graphics. Unpaired accuracy of the peak concentration is just one of the metrics used to evaluate model performance and the August 18 day is the only day outside the EPA guidance value of ±20 percent. The August 18 day was the model ramp-up day and the August 19 day was the primary episode day. As previously noted, due to the influence of the initial and boundary conditions, EPA guidance does not recommend the State to take the ramp-up day (*i.e.*, August 18th) into consideration in developing a control strategy. The August 19 day is within the EPA guidance value for this metric. This metric is a domain wide peak and the model may be predicting for the August 18 day, a peak at a location that did not have a monitor. Another metric evaluated is the Normalized Bias, which measures the model's ability to replicate observed patterns during the times of day when available monitoring and modeled data are most likely to represent similar spatial scales. The EPA guidance value for Normalized Bias is ±15 percent and the values for the August 18 and 19 days are −1.9% and −0.2%. This indicates that the model is doing a very good job in predicting concentrations similar to the observed monitored concentrations. For further analyses that support approval of this episode (without the zero out run), EPA utilized the Technical Support Document (June 1996) and submittals from LDEQ for the previous attainment demonstration SIP. EPA relied upon the complete package of analyses submitted by LDEQ in approving the Baton Rouge SIP.

Comment 16: One commenter asserts that the model over predicts ozone and that this error could be due to errors in the models input that also produce a result of transport from Houston to Baton Rouge. The commenter then indicates that this is only one possible interpretation for the over-prediction of the modeled ozone values.

Response 16: The August 1993 episode occurred during the Gulf of Mexico Air Quality Study (GMAQS) field program and the modeling of that episode benefitted from intensive, enhanced ground level, upper-air, and aircraft measurements. The observed regional conditions during this period were found to be conducive for potential transport of pollutants from the Houston area to the Baton Rouge 5-parish nonattainment area. It occurred in the ''Gulf-High'' regime, and the results demonstrate that emissions from the Houston area are to contributing significantly to the Baton Rouge area exceedances. The modeling runs removing all of the anthropogenic emissions in the Houston area showed significant changes in ozone concentration in the Baton Rouge area. The meteorological model showed that some air masses were coming from the Houston area. Therefore the meteorological modeling indicated that some air masses, and their pollution concentrations, were transported from the Houston area to the Baton Rouge area during this 1993 episode. The fact that the 1993 modeling is predicted ozone concentrations in the domain that are higher than the monitored values does not lead to a conclusion that there is an error in the modeling that would result in an erroneous determination in the magnitude of the impact of transport from Houston to Baton Rouge. Where there are monitors, the modeling has predicted comparable ozone concentrations for the overall Grid D domain. The modeling indicated ozone concentrations higher than values monitored in the Grid D domain in grid cells where monitors did not exist. It is not unusual for modeling to generate higher values in grid cells without monitors, since there are many more grid cells without corresponding ozone monitored values than there are grid cells with monitored values. This is an artifact of modeling and does not, in any way, mean that the transport modeling over-predicts the impacts.

Comment 17: One commenter indicates that the SIP erroneously indicates that the modeling results indicate that the Houston area has an impact on the Baton Rouge design value as high as 6 parts per billion (ppb). The expected impact on the design value can only be the average impact contributing to transport not the maximum value.

Another commenter said that even subtracting the State's estimate that between 2 and 6 parts per billion of ozone is being transported from Houston, the Baton Rouge area is still in nonattainment and therefore not sufficiently ''affected by transport'' to qualify for an extension. This commenter then went on to say that Louisiana has indicated that if the 2–6 ppb were taken into account that Baton Rouge would be in attainment, which is not correct.

Response 17: The 2–6 ppb is a range of potential influence that was estimated based on one set of meteorological conditions. The effect of the 2–6 ppb from transport indicated by the August 19, 1993, modeling impacts upon the current 1-hour design value is difficult, if not impossible, to infer. To use the average impact, as the commenter indicates, or to analyze the exact impact of transport of Houston area emissions/ozone on the Baton Rouge design value would be misleading and inappropriate. The ozone design value is driven by the 4th high value recorded at a monitor within a 3 year period. The monitored values are impacted by transport some of the time, so it is safe to conclude that the monitored values that drive the design value also are affected by transport some of the time (Please see other related responses to comments for more details on the transport discussion). To this extent the design value is impacted. The commenter is correct that the Baton Rouge area showed it needed additional local NO_X emission reductions to attain; therefore, even eliminating the transported emissions from Texas would not bring the Baton Rouge area into attainment. That the Baton Rouge area needs local emission reductions to attain, does not mean that the area is not impacted by transport from Houston or that the area does not satisfy the criteria of our attainment date extension policy.

Comment 18: Louisiana shouldn't be using the BEIS2 data to set biogenic emissions. These data are known to be incorrect. Once the BEIS2 data are used the computer model will always give the result that controlling NO_X will be preferable to controlling hydrocarbon emissions. This is an artifact of BEIS2 data and is not an accurate reflection of reality. The commenter included references to two reports and indicated that BEIS2 is inaccurate and should have not been used for the attainment demonstration. The commenter then requested that a new attainment demonstration be made using more accurate biogenics data.

Response 18: BEIS2 is the EPA-approved method for estimating biogenic emissions. Louisiana followed EPA's guidelines while applying BEIS2. At the time that LDEQ conducted the modeling, the BEIS–2 model was (and remains) the EPA-recommended model for developing biogenic emission estimates for 1-hour attainment demonstration SIP modeling. The report *Biogenic Sources Preferred Methods, May 1996,* indicates that BEIS–2 is the model recommended to be used for estimating biogenic emissions at the time the emissions were being developed for the Baton Rouge SIP modeling. Although EPA is currently developing a third version of the model (BEIS–3), it has not been given to the public for use in formal SIP modeling applications. However, in recent discussions with EPA developers, all indications are that the magnitude of the emissions will likely change very little with BEIS–3 compared to the large changes encountered between BEIS and BEIS–2. Small changes in the magnitude of biogenic emission estimates would not significantly change the overall strategy contained in the Baton Rouge area ozone SIP. BEIS–2 was also used to support the recent 1-hour ozone attainment demonstration SIP modeling for Atlanta, Georgia and Birmingham, Alabama. The two reports that the commenter lists seem to indicate some potential issues for refinement in the state-of-science of estimating biogenic emissions. The state-of-the-science continues to improve in multiple areas of ozone modeling, and the regulatory authorities have to use the best tools at the time to perform ozone modeling. It is unrealistic to require the use of modeling tools (*i.e.*, BEIS3) that become available after the modeling was initially conducted and formally submitted for approval.

Comment 19: On commenter states that Louisiana relies on computer modeling to determine that only NO_X controls, and not stationary VOC source controls, will advance attainment in the Baton Rouge area. This position is a change from only six years ago when EPA approved Louisiana's SIP that relied on computer modeling results to avoid the very NO_X control requirements of Section 182(c), that are now being touted as the only solution. While computer modeling can be used for general conclusions on potential strategies, it should not be relied upon to release industries with controllable emissions from the requirements of 172(c)1.

Response 19: EPA disagrees with the commenter's assertion that LDEQ used computer modeling to release industries from the requirements of section 172(c)(1) of the Act. The state-of-the-science of ozone modeling, both the modeling tools and the understanding of how ozone is generated, continues to evolve. Louisiana's current SIP control strategy is a direct result of these types of improvements. Louisiana conducted numerous sensitivity runs and they showed that additional VOC controls were not very beneficial and that NO_X controls were beneficial in reducing ozone concentrations in the Baton Rouge area. Computer modeling is routinely utilized to determine if control strategies are beneficial and also to rank control strategies based on resulting decreases in ozone.

When EPA granted Louisiana NO_X exemptions under section 182(f) of the Act on January 26, 1996 (61 FR 2438), EPA reserved the right to reverse the approval of the exemptions if subsequent modeling data demonstrated an ozone attainment benefit from NO_X emission controls. Photochemical grid modeling recently conducted for the Baton Rouge area SIP indicates control of NO_X sources will help the area attain the ozone NAAQS. Louisiana therefore requested that the EPA rescind the NO_X exemption based on this new modeling on September 24, 2001. In our proposed approval of the rescission of the NO_X waiver (May 7, 2002, 67 FR 30638), we stated that we believed that the State had adequately demonstrated that additional NO_X reductions would contribute to attainment of ozone NAAQS. Louisiana is not the only state that has requested that the EPA rescind its NO_X waiver based on updated photochemical grid modeling information. Seven years elapsed between the LDEQ's previous modeling demonstration that additional NO_X reductions would not contribute to area attainment, and the most recent modeling events demonstrating that additional NO_X reductions would help the Baton Rouge area attain. As noted above, pollution control technology, including air modeling, is a dynamic and evolving field. The model used by LDEQ to support its request for approval of the NO_X waiver in 1996 was Urban Airshed Model (UAM) IV, which was an EPA-approved photochemical grid model. The model used by LDEQ to support its recent request for rescission of the NO_X waiver was UAM V, a more recently EPA-approved Photochemical Grid Model. This represents a significant refinement in modeling technology.

Comments From LAGen

Adverse comments on our proposed approval for the Baton Rouge SIP were also received from LAGen. The commenter supports EPA's proposal to approve the attainment demonstration, extend the attainment date and withdraw the reclassification, however, they take exception to the proposed Control Strategy Element in the SIP's Section 4.2.1., ''Permitting of NO_X Sources.'' The commenter contends that these SIP revisions could effectively and unnecessarily result in the imposition of the equivalent of a nonattainment rule in an attainment area without first promulgating a rule to establish and implement the new requirements. The commenter also provides detailed comments concerning the SIP revisions. The following are a summary of those detailed comments and EPA's responses.

Comment 20: The commenter requests that EPA not approve Section 4.2.1 of the SIP revisions, which describes the permitting of sources of NO_X in Louisiana. Although the commenter fully supports Louisiana's newly promulgated NO_X RACT regulations, the commenter contends that Section 4.2.1 results in the imposition of nonattainment rules in an attainment area without the required opportunity for notice and comment rulemaking. The commenter argues that EPA's rules applicable to approval of SIP revisions requires public notice of such provisions and prohibits EPA from approving components of SIP revisions that were neither noticed to the public nor prepared in accordance with state law. The commenter contends that Section 4.2.1 constitutes an unlawful delegation of legislative authority under state law because LDEQ did not provide proper opportunity for public notice and comment of this section of the SIP. The commenter also contends that approval of Section 4.2.1 would impose additional and significant requirements beyond those currently required by state law and that EPA's approval of this provision is an ''action concerning regulations that significantly affect

energy supply, distribution or use.'' The commenter also claims that EPA's approval of Section 4.2.1 constitutes a ''significant regulatory action'' and an ''unfunded mandate.'' Therefore, according to the commenter, EPA's approval of Section 4.2.1 requires review by the Office of Management and Budget.

Response 20: EPA disagrees with the commenter's characterization of Section 4.2.1 of the SIP. As noted in its plain language, Section 4.2.1 is not intended as new policy or guidance. We disagree with the commenter's interpretation that Section 4.2.1 of Louisiana's SIP imposes nonattainment rules in an attainment area. Section 4.2.1 provides the State's acknowledgment of the requirements of sections 110(j) and 165(a)(3) of the Act, which prohibit the permitting of emissions from the construction or operation of sources that will cause, or contribute to, air pollution in excess of any national ambient air quality standard in any air quality control region, or any other applicable emission standard or standard of performance under the Act. Thus, Section 4.2.1 is a recitation of existing requirements under state and Federal law. This action merely approves state law as meeting Federal requirements and imposes no additional requirements beyond those imposed by state law. This action is not a ''significant regulatory action,'' nor is it an ''unfunded mandate.'' Therefore EPA's approval of the SIP, including Section 4.2.1, is not subject to review by the Office of Management and Budget. For this reason, this action is also not subject to Executive Order 13211, ''Actions Concerning Regulations That Significantly Affect Energy Supply, Distribution, or Use'' (66 FR 28355, May 22, 2001).

EPA also disagrees with the commenter regarding public participation. LDEQ provided notice of the SIP revisions in several area newspapers and in the Louisiana Register on October 20, 2001 (Louisiana Register, Vol. 27, No. 10). LDEQ also conducted a public hearing November 26, 2001, at which a representative from LAGen was present. Any changes made to section 4.2.1 before LDEQ submitted the SIP to EPA for approval were made in response to comments LDEQ received on its proposed SIP revisions and do not add any new requirements under state or federal law. EPA believes LDEQ properly followed the requirements under state law and under 40 CFR Part 51 in promulgating these SIP revisions. For additional information about the permitting of NO_X sources, please see EPA's recent approval of Louisiana's NO_X RACT regulations and revisions to Louisiana's nonattainment New Source Review program. For these reasons, EPA is approving the SIP as submitted.

Comment 21: LAGen indicated that it is very difficult to evaluate the UAM-V modeling in regard to emissions inputs rendering the regulated community without direct access to the inputs on a facility by facility basis prior to submission of the SIP revisions. Louisiana Generating indicated that they were not previously able to review emission values assigned to individual facilities to evaluate the inputs. Since the submission of the SIP Revisions, LAGen has been informed that the inputs, or base case inventory, included approximately 4,000 tons per year (TPY) of NO_X emissions that did not exist during the base case year and much of which may not be available for use as emission reduction credits. In addition, the model inputs included an inflated value of approximately 6,600 TPY of VOC emissions and probably the majority of these will not be creditable. The use of inflated emissions values in the modeling raises the question of whether the results support all of the control strategies and especially permitting.

In another section of its comment letter, LAGen indicated that the base year inventory used as emissions data inputs for modeling of the Baton Rouge area is believed to be considerably inflated (4,000 TPY of NO_X and 6,600 TPY of VOC) through inclusion of emissions that were eliminated in years before the modeling took place. LAGen claims that the year chosen for inclusion of facility by facility emissions data resulted in inflated emissions values. Therefore, the results of modeling exercises are overestimated and the Control Strategies chosen are based on inflated episode values rendering portions of the SIP revisions more stringent than justified by the data. As submitted to EPA, the State's Attainment Plan/Transport SIP unnecessarily punishes primarily undeveloped parishes in the Region of Influence by limiting their economic development options through the requirement to provide offsets.

Response 21: We disagree. The State provided public notice and a hearing to receive comments on all aspects of the attainment demonstration SIP modeling, including the inventories and approaches used to develop them. As required, the State must make all of these materials available to the public upon request. Moreover, all modeling inputs as well as modeling processes used in the State attainment demonstration SIP were presented and discussed at the monthly Technical Oversight Committee meetings, which included representatives from private industries, local citizens, State, EPA, etc. EPA understands that the State has made all model inputs available to the public for review and comment. In addition, the State instructed it's modeling contractor to provide the public access to this information.

Comment 22: LAGen indicated that the inputs for the modeling include overestimated NO_X emissions and VOC emissions. LaGen further stated that these ''excess'' emissions will not be available for use as offsets and should not have been included in the model.

Response 22: LAGen did not provide any explanation of how the values provided were derived and what is the source of these ''inflated'' emissions. The basecase emission inventory inputs, as well as the meteorological inputs, were utilized to replicate historical ozone exceedance episodes. The State used emission inventories that were acquired from the LDEQ annual emission inventory submittal from the industrial facilities themselves, and various local, state, and federal agencies. As required, the State has made all these information available to the public upon request. LDEQ also utilized other sources for the SIP modeling that were developed with EPA approved emission modeling tools or techniques. Once the base case UAM–V modeling were completed, these emission inventories were then projected to a future year for the development of an emission control strategy. As outlined by EPA guidance and procedures, LDEQ's projected emission inventories accounted for future growth and control. Specifically, LDEQ included the change in emissions due to emission offsets, emission controls, emission growth, and emission reduction credits. While the claimed 4,000 TPY of NO_X is a sizeable amount of emissions, it is only equivalent to approximately 2% of the Grid D domain total NO_X emissions on a daily basis. Sensitivity modeling runs indicated that a decrease in VOC emissions of 30% domain wide, would only result in a few ppb change. The commenter indicated that the basecase inventory was inflated by 6,600 TPY of VOC, which corresponds to approximately 1% of the Grid D domain. Therefore, if excess emissions at the levels the commenter indicated were included in this modeling, the resulting change in the domain's ozone values would likely be in the ''noise'' of the model.

Comment 23: LAGen also indicated that the inflated emission inputs resulted in overestimation in the model, which resulted in more NO_X controls

than are actually needed and, therefore, LDEQ should not need to obtain offsets for ''new'' sources in the surrounding area.

Response 23: The commenter's conclusion is based upon the underlying premise that the model overestimates emissions, and results in an over prediction of ozone concentrations. Furthermore, the commenter's remark that the year chosen for facility emissions in the basecase modeling is not representative of today's emission levels is inaccurate. The purpose of the basecase modeling is to use an emission inventory that reflects the facility's emissions during the ozone episode being modeled (1997 and 1999), not current day (2002) emission levels. To use 2002 emission levels would not be appropriate for 1997 and 1999 episodes. The model inputs represent the best estimates that reflect actual emissions, taking into account requirements for ''banked'' reductions potentially available for future offsets. The modeled results demonstrated attainment for two of the three episodes and the other episode used weight of evidence. For most of the days modeled in the three episodes the modeling seemed to under predict at paired monitor vs. observed values. The ''Average Accuracy of the Peak'' the ''Normalized Bias'' metrics seem to indicate that the model was either less that 3% over or was under predicting within the Grid D domain for most of the modeled days of the three episodes (20 out of 25 days for the Average Accuracy of the Peak and 19 out of 25 days for the Normalized Bias). Both of these metrics compare monitored values with modeled values to evaluate the model performance. Model runs conducted by LDEQ clearly demonstrated the impact of large increases in ''new'' emissions in the area of influence. Such increases, without a one-to-one offset, clearly impacted the attainment demonstration. Furthermore, the state is free to adopt a more stringent control strategy if the state wishes (Section 116 of the CAA).

XII. What Action Is EPA Taking Regarding the State Submittals Addressed by This Final Rule?

EPA is taking the following actions on the state submittals addressed by this final rule:

1. EPA is approving the ground-level 1-hour ozone attainment demonstration SIP for the Baton Rouge, Louisiana, ozone nonattainment area.

2. EPA is approving the State's Transport Demonstration and is granting the State's request for extension, and extending the date for attaining the 1-hour ozone standard to November 15, 2005, while retaining the area's current classification as a serious ozone nonattainment area.

3. EPA is approving the 2005 on-road MVEBs for Louisiana. EPA is also approving Louisiana's enforceable commitment to revise its 2005 MVEBs based on MOBILE6 within two years of its release. No conformity determinations will be made during the second year following the release of MOBILE6 unless and until the MVEBs have been recalculated using MOBILE6 and approved by EPA.

4. EPA is approving an enforceable TCM.

5. EPA is approving the revisions to the 1990 base year emissions inventory, the 15% ROPP, and the Post-1996 ROPP.

6. EPA finds that the Baton Rouge area meets the requirements pertaining to RACM under the Act.

7. EPA is approving Louisiana's enforceable commitment for a mid-course review.

8. EPA is withdrawing our June 24, 2002, rulemaking action entitled ''Determination of Nonattainment as of November 15, 1999, and Reclassification.'' For the reasons stated above in the ''Background'' portion of this notice, EPA is making this final action immediately effective.

Administrative Requirements

Under Executive Order 12866 (58 FR 51735, October 4, 1993), this action is not a ''significant regulatory action'' and therefore is not subject to review by the Office of Management and Budget. For this reason, this action is also not subject to Executive Order 13211, ''Actions Concerning Regulations That Significantly Affect Energy Supply, Distribution, or Use'' (66 FR 28355, May 22, 2001). This action merely approves state law as meeting Federal requirements and imposes no additional requirements beyond those imposed by state law. Accordingly, the Administrator certifies that this rule will not have a significant economic impact on a substantial number of small entities under the Regulatory Flexibility Act (5 U.S.C. 601 *et seq.*). Because this rule approves pre-existing requirements under state law and does not impose any additional enforceable duty beyond that required by state law, it does not contain any unfunded mandate or significantly or uniquely affect small governments, as described in the Unfunded Mandates Reform Act of 1995 (Public Law 104–4).

This rule also does not have tribal implications because it will not have a substantial direct effect on one or more Indian tribes, on the relationship between the Federal Government and Indian tribes, or on the distribution of power and responsibilities between the Federal Government and Indian tribes, as specified by Executive Order 13175 (65 FR 67249, November 9, 2000). This action also does not have Federalism implications because it does not have substantial direct effects on the States, on the relationship between the national government and the States, or on the distribution of power and responsibilities among the various levels of government, as specified in Executive Order 13132 (64 FR 43255, August 10, 1999). This action merely approves a state rule implementing a Federal standard, and does not alter the relationship or the distribution of power and responsibilities established in the CAA. This rule also is not subject to Executive Order 13045 ''Protection of Children from Environmental Health Risks and Safety Risks'' (62 FR 19885, April 23, 1997), because it is not economically significant.

In reviewing SIP submissions, EPA's role is to approve state choices, provided that they meet the criteria of the CAA. In this context, in the absence of a prior existing requirement for the State to use voluntary consensus standards (VCS), EPA has no authority to disapprove a SIP submission for failure to use VCS. It would thus be inconsistent with applicable law for EPA, when it reviews a SIP submission, to use VCS in place of a SIP submission that otherwise satisfies the provisions of the CAA. Thus, the requirements of section 12(d) of the National Technology Transfer and Advancement Act of 1995 (15 U.S.C. 272 note) do not apply. This rule does not impose an information collection burden under the provisions of the Paperwork Reduction Act of 1995 (44 U.S.C. 3501 *et seq.*).

The Congressional Review Act, 5 U.S.C. 801 *et seq.*, as added by the Small Business Regulatory Enforcement Fairness Act of 1996, generally provides that before a rule may take effect, the agency promulgating the rule must submit a rule report, which includes a copy of the rule, to each House of the Congress and to the Comptroller General of the United States. EPA will submit a report containing this rule and other required information to the U.S. Senate, the U.S. House of Representatives, and the Comptroller General of the United States prior to publication of the rule in the **Federal Register**. A major rule cannot take effect until 60 days after it is published in the **Federal Register**. This action is not a ''major rule'' as defined by 5 U.S.C. 804(2).

Under section 307(b)(1) of the CAA, petitions for judicial review of this action must be filed in the United States Court of Appeals for the appropriate circuit by December 2, 2002. Filing a petition for reconsideration by the Administrator of this final rule does not affect the finality of this rule for the purposes of judicial review nor does it extend the time within which a petition for judicial review may be filed, and shall not postpone the effectiveness of such rule or action. This action may not be challenged later in proceedings to enforce its requirements. (See section 307(b)(2).)

List of Subjects

40 CFR Part 52

Environmental protection, Air pollution control, Carbon monoxide, Hydrocarbons, Intergovernmental relations, Lead, Nitrogen dioxide, Ozone, Particulate matter, Reporting and recordkeeping requirements, Sulfur oxides.

40 CFR Part 81

Environmental protection, Air pollution control, National parks, Ozone, Wilderness areas.

Dated: September 24, 2002

Gregg A. Cooke,

Regional Administrator, Region 6.

Chapter I, title 40 of the Code of Federal Regulations is amended as follows:

PART 52—[AMENDED]

1. The authority citation for part 52 continues to read as follows:

Authority: 42 U.S.C. 7401 *et seq.*

Subpart T–Louisiana

2. The table in § 52.970(e) entitled ''EPA Approved Louisiana Nonregulatory and Quasi-Regulatory Measures'' is amended by:

a. removing the entries for: ''Revision to SIP, 15% ROP Plan;'' ''Post–1996 ROP Plan;'' ''Attainment Demonstration for the 1–Hour Ozone NAAQS;'' ''1999 Motor Vehicle Emissions Budgets;'' and ''Revised 1990 Base Year VOC Emissions Inventory'' and

b. adding entries to the end of the table.

The additions read as follows:

§ 52.970 Identification of Plan.

* * * * *

(e) * * *

EPA APPROVED LOUISIANA NONREGULATORY AND QUASI-REGULATORY MEASURES

Name of SIP provision	Applicable geographic or nonattainment area	State submittal date/effective date	EPA approval date	Explanation
*	*	*	*	*
Attainment Demonstration for the 1-Hour Ozone NAAQS.	Baton Rouge, LA	12/31/2001	October 2, 2002 [67 FR 61786].	
Ozone Attainment Date Extension to 11/15/05	Baton Rouge, LA	12/31/2001	October 2, 2002 [67 FR 61786].	
2005 Motor Vehicle Emissions Budgets	Baton Rouge, LA	12/31/2001	October 2, 2002 [67 FR 61786].	
Enforceable Transportation Control Measure Appendix F.	Baton Rouge, LA	12/31/2001	October 2, 2002 [67 FR 61786].	
Enforceable commitment to perform a mid-course review and submit a SIP and revision by 05/01/04.	Baton Rouge, LA	12/31/2001	October 2, 2002 [67 FR 61786].	
Post 1996 Rate of Progress Plan Revisions	Baton Rouge, LA	12/31/2001	October 2, 2002 [67 FR 61786].	
15% Rate of Progress Plan Revisions	Baton Rouge, LA	12/31/2001	October 2, 2002 [67 FR 61786].	
1990 VOC Base Year Inventory Revisions	Baton Rouge, LA	12/31/2001	October 2, 2002 [67 FR 61786].	
Reasonable Available Control Measure Analysis	Baton Rouge, LA	12/31/2001	October 2, 2002 [67 FR 61786].	

PART 81—[AMENDED]

1. The authority citation for part 81 continues to read as follows:

Authority: 42 U.S.C. 7401 *et seq.*

2. The amendment to § 81.319 which published on June 24, 2002 (67 FR 42688) and were revised on August 20, 2002 (67 FR 53882) to become effective on October 4, 2002, are withdrawn. The table in § 81.319 entitled ''Louisiana—Ozone (1-Hour Standard)'' is amended by revising the entry for the Baton Rouge area to read as follows:

§ 81.319 Louisiana.

* * * * *

LOUISIANA-OZONE

[1-Hour Standard]

Designated area	Designation		Classification	
	Date [1]	Type	Date [1]	Type
Baton Rouge area:				
Ascension Parish	11/15/90	Nonattainment	11/15/90	Serious.
East Baton Rouge Parish	11/15/90	Nonattainment	11/15/90	Serious.
Iberville Parish	11/15/90	Nonattainment	11/15/90	Serious.
Livingston Parish	11/15/90	Nonattainment	11/15/90	Serious.
West Baton Rouge Parish	11/15/90	Nonattainment	11/15/90	Serious.

LOUISIANA-OZONE—Continued

[1–Hour Standard]

Designated area	Designation		Classification	
	Date [1]	Type	Date [1]	Type
* * * *	*	*	*	

[1] This date is October 18, 2000, unless otherwise noted.

* * * * *

[FR Doc. 02–24763 Filed 10–1–02; 8:45 am]

BILLING CODE 6560–50–P

ENVIRONMENTAL PROTECTION AGENCY

40 CFR Part 300

[FRL–7383–9]

National Oil and Hazardous Substance Pollution Contingency Plan; National Priorities List

AGENCY: Environmental Protection Agency.

ACTION: Direct final notice of deletion of a portion of the Department of Energy (DOE) Mound Superfund Site from the National Priorities List.

SUMMARY: The Environmental Protection Agency (EPA), Region V is publishing a direct final notice of deletion of Parcel 4 of the Department of Energy (DOE) Mound Superfund Site (Mound Site), located in Miamisburg, Ohio, from the National Priorities List (NPL).

The NPL, promulgated pursuant to section 105 of the Comprehensive Environmental Response, Compensation, and Liability Act (CERCLA) of 1980, as amended, is appendix B of 40 CFR part 300, which is the National Oil and Hazardous Substances Pollution Contingency Plan (NCP). This direct final deletion is being published by EPA with the concurrence of the State of Ohio, through the Ohio Environmental Protection Agency (OEPA), because EPA and the OEPA have determined that the Department of Energy has implemented all appropriate response actions required with respect to Parcel 4. This deletion does not preclude future actions under Superfund or relieve DOE of their Long-Term Stewardship or Operation and Maintenance responsibilities.

DATES: This direct final notice of partial deletion will be effective December 2, 2002 unless EPA receives adverse comments by October 31, 2002. If adverse comments are received, EPA will publish a timely withdrawal of the direct final notice of deletion in the **Federal Register** informing the public that the deletion will not take effect.

ADDRESSES: Comments may be mailed, telephoned, or e-mailed to: Timothy Fischer, Remedial Project Manager at (312) 886–5787, *Fischer.Timothy@EPA.Gov* or Gladys Beard, State NPL Deletion Process Manager at (312) 886–7254, *Beard.Gladys@EPA.Gov*, Superfund Division, U.S. EPA Region, 5, 77 W. Jackson Blvd. (SR–6J), Chicago, IL 60604.

Information Repositories: Comprehensive information about the Site is available for viewing and copying at the Site information repositories located at: EPA Region V Library, 77 W. Jackson Boulevard, Chicago, Il 60604, (312) 353–5821, Monday through Friday 8 a.m. to 4 p.m.; The CERCLA Public Reading Room, Miamisburg Senior Adult Center, 305 Central Avenue, Miamisburg, OH 45342.

FOR FURTHER INFORMATION CONTACT: Timothy Fischer, Remedial Project Manager at (312) 886–5787, *Fischer.Timothy@EPA.GOV* or Gladys Beard, State NPL Deletion Process Manager at (312) 886–7253, *Beard.Gladys@EPA.Gov* or 1–800–621–8431, EPA Region V, 77 W. Jackson Boulevard, Mail Code SR–6J, Chicago, IL 60604.

SUPPLEMENTARY INFORMATION:

Table of Contents

I. Introduction
II. NPL Deletion Criteria
III. Deletion Procedures
IV. Basis for Partial Site Deletion
V. Deletion Action

I. Introduction

EPA Region V is publishing this direct final notice of deletion of a portion of the Department of Energy Mound Superfund Site (Mound Site), from the NPL.

EPA identifies sites that appear to present a significant risk to public health or the environment and maintains the NPL as the list of those sites. As described in section 300.425(e)(3) of the NCP, sites deleted from the NPL remain eligible for remedial actions if conditions at a deleted site warrant such action.

Because EPA considers this action to be non-controversial and routine, EPA is taking it without prior publication of a notice of intent to delete. This action will be effective December 2, 2002 unless EPA receives adverse comments by November 1, 2002 on this document. If adverse comments are received within the 30-day public comment period on this document, EPA will publish a timely withdrawal of this direct final deletion before the effective date of the deletion and the deletion will not take effect. EPA will, as appropriate, prepare a response to comments and continue with the deletion process on the basis of the notice of intent to delete and the comments already received. There will be no additional opportunity to comment.

Section II of this document explains the criteria for deleting sites from the NPL. Section III discusses procedures that EPA is using for this action. Section IV discusses Parcel 4 of the DOE Mound Superfund Site and demonstrates how a portion of the Site meets the deletion criteria. Section V discusses EPA's action to delete a portion of the Site from the NPL unless adverse comments are received during the public comment period.

II. NPL Deletion Criteria

Section 300.425(e) of the NCP provides that releases may be deleted from the NPL where no further response is appropriate. In making a determination to delete a release from the NPL, EPA shall consider, in consultation with the State, whether any of the following criteria have been met:

i. Responsible parties or other persons have implemented all appropriate response actions required;

ii. All appropriate Fund-financed (Hazardous Substance Superfund Response Trust Fund) responses under CERCLA have been implemented, and no further response action by responsible parties is appropriate; or

iii. The remedial investigation has shown that the release poses no significant threat to public health or the environment and, therefore, the taking of remedial measures is not appropriate.

Even if a site or portions of a site are deleted from the NPL, where hazardous

substances, pollutants, or contaminants remain at the deleted site above levels that allow for unlimited use and unrestricted exposure, CERCLA section 121(c), 42 U.S.C. 9621(c), requires that a subsequent review of the site be conducted at least every five years after the initiation of the remedial action at the deleted site to ensure that the action remains protective of public health and the environment. If new information becomes available which indicates a need for further action, DOE or EPA may initiate remedial actions. Whenever there is a significant release from a site deleted from the NPL, the deleted site may be restored to the NPL without application of the hazard ranking system.

III. Deletion Procedures

The following procedures apply to the partial deletion of this Site:

(1) The EPA consulted with Ohio on the partial deletion of the Site from the NPL prior to developing this direct final notice of deletion.

(2) Ohio concurred with the partial deletion of the Site from the NPL.

(3) Concurrently with the publication of this direct final notice of partial deletion, a notice of intent to partially delete is published today in the ''Proposed Rules'' section of the **Federal Register**, as well as in a major local newspaper of general circulation at or near the Site, and is being distributed to appropriate federal, state, and local government officials and other interested parties. The newspaper notice announces the 30-day public comment period concerning the notice of intent to partially delete the Site from the NPL.

(4) The EPA placed copies of documents supporting the partial deletion in the site information repositories identified above.

(5) If adverse comments are received within the 30-day public comment period on this document EPA will publish a timely notice of withdrawal of this direct final notice of partial deletion before its effective date and will prepare a response to comments and continue with a decision on the partial deletion based on the notice of intent to partially delete and the comments already received.

Deletion or partial deletion of a site from the NPL does not itself create, alter, or revoke any individual's rights or obligations. Deletion or partial deletion of a site from the NPL does not in any way alter EPA's right to take enforcement actions, as appropriate. The NPL is designed primarily for informational purposes and to assist EPA management. Section 300.425(e)(3) of the NCP states that the deletion of a site from the NPL does not preclude eligibility for future response actions should future conditions warrant such actions.

IV. Basis for Partial Site Deletion

The following information provides EPA's rationale for deleting Parcel 4 of the Mound Site from the NPL and EPA's finding that the criteria in 40 CFR 300.425(e) are satisfied:

Site Location

The Mound Site is located in Miamisburg, Ohio, about 10 miles south of Dayton and 45 miles north of Cincinnati. The 306-acre site consists of a number of industrial buildings in the northern portion of the Mound Site, and open land in the southern portion. The Mound Site is located near an ancient Indian mound; hence the name of the DOE facility—the Mound Plant. Parcel 4 is generally bound to the north by the operational area of the plant, to the east by off-site residences, to the south by Benner Road, and to the west by the Miami-Erie Canal. A legal description of Parcel 4 is included in the Record of Decision for Parcel 4, and in the administrative record for the partial deletion decision.

Site History

Most of the Site is owned by the United States Department of Energy, which began operations there in 1948 involving the manufacture of triggering devices for nuclear weapons. As a result of past disposal practices and contaminant releases to the environment, including radioactive contaminants, the Mound Site was listed on the NPL on November 21, 1989 (54 FR 48184). DOE signed a CERCLA Section 120 Federal Facility Agreement (FFA) with EPA in October, 1990. In 1993, this agreement was modified and expanded to include OEPA. DOE serves as the lead agency for CERCLA-related activities at the Mound Site.

Remedial Investigation and Feasibility Study (RI/FS)

DOE, EPA, and OEPA originally planned to address the Mound Site's environmental restoration issues under a set of Operable Units(OUs), each of which would include a number of Potential Release Sites (RRSs). For each OU, the site would follow the traditional CERCLA Process: A Remedial Investigation/Feasibility Study (RI/FS), followed by a Record of Decision (ROD) and Remedial Design/Remedial Action (RD/RA). In 1995, after beginning remedial investigations for several OUs, DOE and its regulators concluded that the OU approach was inefficient for Mound due to the number and variety of contaminants on the Site. DOE, EPA, and OEPA agreed that it would be better to evaluate each PRS or building separately, use removal action authority to remediate each one as needed, and establish a goal of no additional remediation other than institutional controls for the final remedy. Following completion of removal actions, a residual risk evaluation would be conducted to ensure that industrial use of the block or building would be safe. DOE, EPA, and OEPA called this approach the ''Mound 2000 Process.''

The Mound 2000 Process established a Core Team consisting of representatives of DOE, EPA, and OEPA. The Core Team evaluates each of the potential contamination problems at the Mound Site and recommends the appropriate response. It uses information gathered from site visits, existing data, and knowledge of Mound Plant processes to determine whether or not any action is warranted for potential release sites. If a decision cannot be made based on the information on hand, the Core Team identifies the specific, additional information needed. The Core Team also receives input from technical experts and from the public. Thus, all stakeholders have an opportunity to express their opinions or suggestions for each potential problem area.

In February 2001, DOE conducted a residual risk evaluation for Parcel 4 of the Mound Site. The purpose of the risk evaluation was to assess risks associated with levels of contamination that exist after completion of removal action. The residual risk evaluation method was consistent with the CERCLA baseline risk assessment method to ensure that future users of the land would not be exposed to contaminant levels that would pose unacceptable risks. The residual risk assessment for Parcel 4 determined that limiting use of Parcel 4 to industrial/commercial uses was protective of human health and the environment.

Record of Decision Finding

The ROD was signed for Parcel 4 of the Mound Site on March 8, 2001. The selected remedy included institutional controls in the form of deed restrictions on future land and groundwater use. DOE, or its successors, as the lead agency for this ROD, has the responsibility to monitor, maintain and enforce these institutional controls. In order to maintain protection of human health and the environment at Parcel 4 in the future, the institutional controls ensure:

1. Maintenance of industrial/commercial land use;
2. Prohibition against residential use;
3. Prohibition against the use of groundwater;
4. Site access for federal and state agencies for the purpose of sampling and monitoring; and
5. Prohibition against removal of Parcel 4 soils from the DOE Mound property boundary (as owned in 1998) without approval from the Ohio Department of Health (ODH) and the Ohio Environmental Protection Agency (OEPA).

ROD Implementation

DOE has implemented the ROD for Parcel 4 by placing restrictions in the deed for the Parcel. DOE conveyed Parcel 4 to the Miamisburg Mound Community Improvement Corporation (MMCIC) on April 19, 2001. Because the restrictions have been placed in a Quit Claim Deed for Parcel 4 and that deed has been executed with the transfer of the land to the MMCIC, the restrictions are enforceable and the remedy is considered ''implemented'.

While EPA does not believe that any future response actions for Parcel 4 will be needed, if future conditions warrant such action, this area of the Mound Site would be eligible for Fund-financed response actions. This partial deletion affects Parcel 4 only. The remainder of the Site, save for those portions deleted in a previous action (see 66 FR 10371–10374), remain on the NPL.

Operation and Maintenance of Institutional Controls

Under the ROD signed on March 8, 2001, the Department of Energy committed itself to monitor and maintain the institutional controls for Parcel 4 required by the ROD, and to enforce them if necessary. The ROD also required DOE to provide U.S. EPA and Ohio EPA with periodic compliance assessments. Deletion of Parcel 4 from the NPL does not alter in any way DOE's Operation and Maintenance or Long-Term Stewardship obligations under the Parcel 4 ROD. A Long-Term Stewardship Plan is under development for the DOE Mound Plant. Long-Term Stewardship (LTS) is defined as ''the physical controls, institutions, information and other mechanisms needed to ensure protection of people and the environment at sites where DOE has completed or plans to complete 'cleanup' (*e.g.*, landfill closures, remedial actions, removal actions, and facility stabilization). This concept of long-term stewardship includes, inter alia, land use controls, monitoring, maintenance, and information management (This definition of long-term stewardship comes from the 1998 settlement agreement DOE entered into; *NRDC, et al.* v. *Richardson, et al.*, Civ. No. 97–963).'' The LTS Plan for DOE Mound covers all the above concepts and refers to the processes set up to ensure the effectiveness of the institutional controls. For more information, contact Dann Bird, Miamisburg Mound Community Improvement Corporation, at (937) 865–4266 or Sue Smiley, Department of Energy, at (937) 865–3984.

Five-Year Review

Because the remedy for Parcel 4 does not allow unlimited use of and unrestricted exposure to the property, DOE is required by Section 121(c) of CERCLA to review the remedy to assure that it continues to protect human health and the environment. While CERCLA requires a review at least once every 5 years after the initiation of remedial action, DOE committed itself to conduct such reviews annually. DOE also committed itself to consult with U.S. EPA, Ohio EPA, and the Ohio Department of Health on these reviews. The first Five-Year Review of the Mound Plant was completed on September 28, 2001. It concluded that the Parcel 4 remedy remains protective of human health and the environment. An additional walkover inspection of the Parcel 4 property was accomplished on May 21, 2002, and no violations of the deed restrictions were documented.

Community Involvement

Public participation activities with respect to any response actions in Parcel 4 have been satisfied as required in CERCLA section 113(k), 42 U.S.C. 9613(k), and CERCLA section 117, 42 U.S.C. 9617. Documents in the deletion docket which EPA relied on for recommendation of the partial deletion of this Site from the NPL are available to the public in the information repositories.

Federal Facility Agreement

Deletion of Parcel 4 from the NPL in no way alters the obligations of the Department of Energy under the Federal Facility Agreement under CERCLA Section 120, signed by U.S. EPA, Ohio EPA, and DOE in 1993, including Long-Term Stewardship or Operation and Maintenance responsibilities.

V. Deletion Action

The EPA, with concurrence of the State of Ohio, has determined that the Department of Energy has implemented all appropriate response actions required, and that no further CERCLA response is appropriate to provide protection of human health and the environment. Therefore, EPA is deleting Parcel 4 of the Site from the NPL.

Because EPA considers this action to be non-controversial and routine, EPA is taking it without prior publication. This action will be effective December 2, 2002, unless EPA receives adverse comments by November 1, 2002. If adverse comments are received within the 30-day public comment period, EPA will publish a timely withdrawal of this direct final notice of deletion before the effective date of the deletion and it will not take effect. EPA will prepare a response to comments and as appropriate continue with the deletion process on the basis of the notice of intent to delete and the comments already received. There will be no additional opportunity to comment.

List of Subjects in 40 CFR Part 300

Environmental protection, Air pollution control, Chemicals, Hazardous waste, Hazardous substances, Intergovernmental relations, Penalties, Reporting and recordkeeping requirements, Superfund, Water pollution control, Water supply.

Dated: September 17, 2002.

Norman Niedergang,

Acting Regional Administrator, Region V.

For the reasons set out in this document, 40 CFR part 300 is amended as follows:

PART 300—[AMENDED]

1. The authority citation for part 300 continues to read as follows:

Authority: 33 U.S.C. 1321(c)(2); 42 U.S.C. 9601–9657; E.O. 12777, 56 FR 54757, 3 CFR, 1991 Comp., p. 351; E.O. 12580, 52 FR 2923, 3 CFR, 1987 Comp., p. 193.

Appendix B—[Amended]

2. Table 2 of Appendix B to Part 300 is amended under Ohio ''OH'' by revising the entry for ''Mound Plant (USDOE)'' and the city ''Miamisburg.''

TABLE 2.—FEDERAL FACILITIES SECTION

State	Site name	City/County	(Notes) [a]
* * * * *	*		*
OH	Mound Plant (USDOE)	Miamisburg	P
* * * * *	*		*

([a])
P=Sites with partial deletion(s).

* * * * *

[FR Doc. 02–24641 Filed 10–1–02; 8:45 am]

BILLING CODE 6560–50–U

DEPARTMENT OF HEALTH AND HUMAN SERVICES

Centers for Medicaid & Medicare Services

42 CFR Part 482

[CMS–3018–N]

RIN 0938–AL15

Medicare and Medicaid Programs; Hospital Conditions of Participation: Clarification of the Regulatory Flexibility Analysis for Patients' Rights

AGENCY: Centers for Medicare & Medicaid Services (CMS), HHS.

ACTION: Interim final rule; clarification of regulatory flexibility analysis.

SUMMARY: On July 2, 1999, we published an interim final rule with comment period introducing a new Patients' Rights Condition of Participation (CoP) that hospitals must meet to be approved for, or to continue participation in, the Medicare and Medicaid programs. Several aspects of that interim final rule with comment period were challenged, including its regulatory flexibility analysis (RFA). As a result of this action, a Federal court, without enjoining continued enforcement of the rule, ordered the Secretary of the Department Health and Human Services (DHHS) to complete a compliant RFA to accompany the interim final rule with comment period. This document addresses the court's order.

FOR FURTHER INFORMATION CONTACT: Jeannie Miller, RN, (410) 786–3164.

SUPPLEMENTARY INFORMATION:

I. Background

A. General

In the December 19, 1997 **Federal Register** (62 FR 66726), we published a proposed rule that detailed our plans to revise all of the hospital conditions of participation (CoPs), emphasizing lessening Federal regulations to eliminate unnecessary structural and process requirements, focus on outcomes of care, allow greater flexibility to hospitals and practitioners to meet quality standards, and place a stronger emphasis on quality assessment and performance improvement. The proposed rule introduced our intent to include a new Patients' Rights CoP for hospitals. We solicited comments and received strong support for the establishment of the new CoP from the public, mental health advocacy groups, the media, and the Congress.

After the proposed rule was published, reports of injuries and deaths associated with the use of restraints and seclusion increased our concern about patient safety. State surveyors, patient advocacy groups, the media, and the public also brought complaints about hospital violations of patients' rights to our attention. These violations included denying or frustrating patients' access to care, denying patients' full involvement in their treatment, disregarding patients' advance directives, and denying patients access to their records. In the July 2, 1999 **Federal Register** (64 FR 36070), we published an interim final rule with comment period to address these concerns and assure patient safety. The rule set forth requirements supporting and protecting patients' rights in the hospital setting, specifically, the right to be free from the inappropriate use of seclusion and restraint, with requirements to protect the patient when use of either intervention is necessary.

B. Legal Challenge of the Interim Final With Comment Period

The interim final rule with comment period was challenged in United States District Court for the District of Columbia by the National Association of Psychiatric Health Systems, the American Hospital Association, the Sheppard and Enoch Pratt Foundation, Incorporated, and Acadia Hospital. (*See National Association of Psychiatric Health Sys.* v. *Shalala*, 120 F.Supp.2d 33 (D.D.C. 2000).) Plaintiffs challenged one provision of the new CoP, the requirement that hospitals must provide for an in-person evaluation of a patient by a physician or other licensed independent practitioner (LIP) within 1 hour of initiating the use of restraint or placing the patient in seclusion to address the patients' violent or aggressive behavior. (*See* § 482.13(f)(3)(ii)(C).)

On September 14, 2000, the Court ruled in favor of the Secretary with respect to the plaintiffs' challenge under the Administrative Procedures Act; however, the Court ruled against the Secretary with respect to the plaintiffs' claim that the rule failed to fulfill certain requirements of the Regulatory Flexibility Act (RFA). In its decision, the Court noted that the RFA requires—

- A succinct statement of the need for and objectives of the rule;
- A summary of and response to the significant issues raised by public comments to the RFA assessment in the notice of proposed rulemaking;
- A description and estimate of the number of small entities to which the rule will be applied;
- A description of the projected reporting and recordkeeping requirements of the rule, including an estimate of the effect that the recordkeeping requirements will have on small entities; and
- A description of the efforts the agency has taken to minimize the significant economic impact of the rule on small businesses, including a discussion of the less restrictive alternatives considered and rejected.

The Court, noting that the Secretary had not made a ''reasonable good faith effort to canvass major options and weigh their probable effects,'' concluded that the agency failed to satisfy the fifth element of the Regulatory Flexibility Act. The case was remanded to the Department of Health and Human Services for completion of a compliant RFA without enjoining continued enforcement of the requirements of the

interim final rule with comment period. Accordingly, we are publishing this notice to discuss the alternatives that we considered when developing the July 2, 1999 interim final rule with comment period.

II. Revised Regulatory Impact Analysis of the July 2, 1999 Rule

A. Introduction

When we published the July 2, 1999 interim final rule with comment period, we lacked critical factual reports, studies, and data that would have aided in the development of specific cost or savings estimates. This factor continues to be an obstacle in providing cost estimates on the impact of some of the requirements.

At the time of the publication of the July 2, 1999 interim final rule with comment period, at least 80 percent of the 6,116 inpatient hospitals that participate in the Medicare or Medicaid programs were subject to existing accreditation requirements pertaining to the use of restraints and seclusion. While the pre-1999 Joint Commission for the Accreditation of Healthcare Organizations (JCAHO) requirements did not contain all elements addressed by the interim final rule with comment period, many parallel standards were in place. There were two major differences between JCAHO's standards and our standards. The first is that JCAHO did not require the 1-hour face-to-face assessment but instead required a phone call to the LIP. The second is that JCAHO's monitoring requirements were more stringent than ours. It is worth noting that JACHO is enforcing all of our requirements, including the 1-hour rule, when conducting accreditation surveys. Accredited hospitals operated in an atmosphere that emphasized the elimination of unnecessary restraint, monitoring use, and reporting sentinel events to the JCAHO. Therefore, we approximated that 4,893 facilities were already subject to restraint and seclusion requirements. The remaining 1,223 facilities (non-profit, proprietary, and government-funded) would be subject to any existing state laws concerning the use of restraint and seclusion. Additionally, at least two States (New York and Pennsylvania) had established detailed regulations and policies regarding the use of restraint and seclusion in State-run and private facilities. Therefore, we concluded that the majority of hospitals were already affected by restraint and seclusion-related requirements, even if they were not equal in all points to the requirements specified in the interim final rule with comment period. Thus, although Medicare- and Medicaid-participating hospitals have diverse characteristics, many are accredited; and therefore, could be assumed to have been meeting pre-existing accreditation standards at the time the interim final rule with comment period was published.

Furthermore, with the increasing amount of research and literature identifying the potential hazards associated with restraint use, some hospitals were already engaged in efforts to reduce the use of restraints. The variations among hospitals, the lack of data on the prevalence of restraint or seclusion use in hospitals, and the trend of restraint use reduction efforts created problems in the formulation of a specific estimate for the interim final rule with comment period. While these were obstacles to the formulation of an estimate for the interim final rule with comment period, we invite hospital feedback on these points so that we may use this information in formulation of the final rule and its impact estimate.

B. Anticipated Effects and Options Considered

1. Effects on Hospitals

a. Restraint and Seclusion (§ 482.13(e) and (f))

Our regulations in § 482.13(e) and (f) prohibit the use of restraint and seclusion for purposes of coercion, discipline, convenience or retaliation by staff. These regulations also establish procedures that apply when hospitals use restraint or seclusion.

We considered developing one set of general requirements regulating restraint and seclusion use in all hospitals. However, based on public comments and recent concern regarding the risks associated with restraint and seclusion use for behavior management situations, we concluded that one set of requirements did not afford patients with adequate protections. Moreover, we believe that it is important to maintain consistency between Federal and accreditation standards. Therefore, we adopted an approach to restraints and seclusion similar to the existing standards that JCAHO created (for example, differentiating between situations when a restraint is being used to manage behavior and the concept of time limited orders). Accordingly, we made a distinction between restraint use in the provision of acute medical and postsurgical care (§ 482.13(e)) and restraint and seclusion use for the management of aggressive or violent behavior (§ 482.13(f)).

b. Training (§§ 482.13(e)(5) and (f)(6))

Section 482.13(e)(5) requires that staff with direct patient contact (that is, staff who may be involved either with the application of a restraint or the monitoring, assessment, or reevaluation of a restrained or secluded patient's condition) are provided with ongoing education and training in the proper and safe use of restraints. Section 482.13(f)(6) parallels these requirements and adds that staff involved in the application of a physical restraint or seclusion to manage aggressive or violent behavior must receive additional training in alternative methods for handling behavior, symptoms, and situations that have been traditionally treated using restraints or seclusion.

When writing the interim final rule with comment period, we considered the burden of requiring training on the use of restraints and seclusion for all staff members with direct patient contact. We believed that some persons inaccurately construed the requirement to entail the training of dietary, administrative, housekeeping, and other types of staff who are not involved in the application or use of restraints or seclusion. (*See* Tag A797, Appendix A of the State Operations Manual, HCFA Pub. No. 7, page A196.)

Most hospitals that participate in Medicare or Medicaid already have some type of training program; therefore, we believed that these requirements refine existing programs rather than mandate new ones. JCAHO's standards are applicable to accredited hospitals (currently 80 percent of Medicare- and Medicaid-participating hospitals) and require a similar training program for staff involved with the application of restraints or seclusion. (See JCAHO's 2000 Comprehensive Accreditation Manual for Hospitals standard TX 7.1.1.3 (which indicates that staff orientation and education create a culture emphasizing prevention and appropriate use of restraint or seclusion as well as encouraging alternatives) and standard TX 7.1.3.1.4 (which requires that restraint or seclusion is only used correctly by competent, trained staff)).

Lastly, we considered no training requirements; however, the *Hartford Courant* newspaper series indicated that training programs are a key ingredient in assuring a reduction in patient injuries and deaths associated with the use of restraints and seclusion. To omit this requirement in the interim final rule with comment period would have been to leave a critical gap in the strategy to improve patient care and assure patient safety.

c. Face-to-Face Monitoring (§ 482.13(f)(4))

The hospital CoPs require continuous face-to-face monitoring of a patient who is simultaneously physically restrained and secluded to address violent or aggressive behavior. As an alternative, continuous monitoring may occur through the use of both video and audio equipment, with the monitoring occurring in close proximity to the patient to allow quick intervention when needed.

We agree that this requirement may incur costs for hospitals, depending on their current practice. However, we believed that the training required by the July 2, 1999 interim final rule with comment period equipped staff with alternative methods for handling violent or aggressive patient behavior thereby reducing overall use of restraint or seclusion.

We did not require that this monitoring be done by a registered nurse. It could be performed by a nursing assistant or other staff member who has completed the required training.

We considered only requiring periodic monitoring when the two interventions are used simultaneously. However, we concluded that the instances meriting dual use of restraint or seclusion would be so rare and extreme that they would indicate a need for greater staff vigilance. Restraint and seclusion can actually increase the patient's agitation, and staff should be available to help the patient regain self control, thus ending one intervention or both as quickly as possible. Leaving a distressed patient alone for half an hour or longer, not understanding what is happening to him or her, does not facilitate the patient's recovery of his or her self-control. We concluded that uninterrupted monitoring assures that if the patient becomes more distressed by the intervention, staff can assist quickly.

d. One-Hour Evaluation (§ 482.13(f)(3)(ii)(C))

The interim final rule with comment period requires face-to-face assessment, by a physician or other LIP within one hour of the initiation of the intervention, of a patient who has been restrained or secluded to manage his or her violent or aggressive behavior. We considered whether this requirement was impossible to fulfill because of the lack of available personnel, geographic barriers, and costs associated with this degree of coverage. We also considered whether a required onsite evaluation by a physician or LIP is too costly or without a demonstrable benefit in many cases.

When the interim final rule with comment period was published in July 1999, we were not aware of any data regarding the appropriateness of the 1-hour timeframe and we solicited, but did not receive, comments providing data undercutting this requirement.

In including the 1-hour provision, we considered that hospitals are required to have 24-hour physician coverage. Section 482.12(c)(3) requires that the governing body of the hospital must ensure that a doctor of medicine or osteopathy is on duty or on call at all times. The interim final with comment period did not change this requirement or require hiring of new staff or having a physician onsite at all times. When staff are trained in alternatives to restraint or seclusion, prevalence of use should decline so that restraint or seclusion is used only as a last resort. We understand that for certain patient populations, such as for those who have self mutilating behaviors, a requirement for recurring onsite visits to assess the use of a restraint that is part of the patient's treatment plan may not be needed or appropriate. We plan to address these uses in forthcoming interpretive guidelines. Additionally, we reiterate that uses of restraint that occur in conjunction with an acute care need do not trigger the need for evaluation of the patient by a physician or other LIP within one hour. These uses may include, for example, a patient who is attempting self-extubation or tearing at lines whose behavior cannot be handled through less restrictive means.

In establishing this requirement, we considered onsite physician-only assessment within half an hour, which is the policy in one State's mental health system. However, we believed that this timeframe would not be reasonable in rural or remote areas, and therefore; we did not impose this requirement.

We also considered less prescriptive approaches. For example, we could have drafted regulations that remained silent on this point. However, various sources of information, including the press indicated that the patient is at high risk for injury when being restrained or secluded in an effort to manage his or her violent or aggressive behavior. (*See* ''Deadly Restraint: A Hartford Courant Investigative Report,'' with articles from October 11 through 15, 1998). Often patients are medically complex, with concomitant medical and psychiatric symptoms and conditions. When staff must resort to restraint or seclusion to protect the patient or others, it is essential to examine: (1) The immediate situation, that is whether the patient has been injured by the intervention; (2) the patient's reaction to the intervention; (3) the patient's overall medical and psychiatric condition; and (4) whether the behavior may stem from a condition that can be remedied quickly. Such a determination is a medical decision that requires the integration of many pieces of information, and therefore; merits a physician's or other LIP's attention.

We also considered other options that may be perceived as less burdensome. We could have drafted regulations that remained silent on the timeframe for a physician's or other LIP's assessment of a restrained or secluded patient. This alternative may be feasible for the types or uses of restraint described in § 482.13(e). In these types of situations, we left to the physician's or other LIP's discretion the decision of whether immediate, inperson assessment is required. In an instance when an armboard is applied to prevent accidental dislodging of an intravenous needle, arguably the application of the restraint does not represent a significant change in the patient's status, nor does the armboard pose a grave hazard to the patient's health or safety. In contrast, a patient's attempt to self-extubate could warrant immediate physician attention, depending on the patient and whether this behavior represents a marked change in status. However, we believed that requiring an inperson assessment within 1 hour for the variety of restraint uses under § 482.13(e) was not feasible because of the wide range of circumstances covered by that standard.

On the other hand, § 482.13(f) is more focused. We considered whether immediate attention was necessary when restraint or seclusion was used to manage a patient's violent or aggressive behavior. We recognized that the types of behavior that warrant the patient's placement in seclusion or the application of restraint often create a situation in which both the patient and staff are at risk for injury. The patient who is resisting staff restraint in this situation is unlike the noncombative patient who had an armboard applied. This patient has transitioned from seemingly calm behavior into a state at which an extreme measure has been undertaken to protect him or her. As discussed in the preamble to the interim final rule with comment period, we concluded that quick, medical involvement is warranted to assure safety and to develop a plan to avert or diminish further conflict. We believed that the maximum timeframe of 1 hour

established by this rule is a reasonable one.

We also considered permitting a staff member to perform a patient assessment through telephone consultation with a physician or other LIP. Given the complexity of the patient population, we did not select this option. Physicians and LIPs are extensively trained in assessment of symptoms and behaviors, in physical examination and formulation of diagnoses and resulting treatment strategies. Staff who are onsite may have widely disparate assessment skills. Some hospitals may staff patient care areas with licensed practical nurses or other available staff. We are not persuaded that these staff members have the physical and psychiatric assessment skills that correspond to the medical complexity of a patient in crisis. Accordingly, we opted not to permit patient assessment through telephone consultation.

2. Effect on Beneficiaries

The implementation of the Patients' Rights CoP served to protect not only Medicare and Medicaid beneficiaries, but all patients receiving care in any of the 6,166 Medicare- and Medicaid-participating hospitals (that is, acute care, psychiatric, rehabilitation, long-term care, children's, and alcohol-drug) including small rural hospitals. Our goal is to safeguard against the mistreatment of all patients in these facilities including, but not limited to— (1) Deaths due to inappropriate restraint or seclusion use; (2) violation of patients' privacy and confidentiality in various aspects of the healthcare delivery process; and (3) systematic frustration of the patients' efforts to acquire his or her medical records. Patients benefit from the hospitals' focus on patients' rights. Through these protections, patient care can be delivered in an atmosphere of respect for an individual patient's comfort, dignity, and privacy. The interim final rule with comment period emphasizes the importance of staff training, adequate monitoring and assessment, and prompt evaluation of restrained or secluded patients. As these factors, lack of training, evaluation, monitoring, and assessment were involved in the deaths reported by the media, we believed that implementation of the Patients' Rights CoP would lead to a reduction in the number of restraint- and seclusion-related injuries and deaths in hospitals. The following chart represents the data that we have received from providers regarding deaths that may have been related to restraint or seclusion use:

Year	Number of Deaths
August 1999—December 1999 [1]	14
2000	34
2001	22
January 2002–March 2002 [2]	5
Total from August 1999–March 2002	75

[1] The interim final rule with comment period was published on July 2, 1999 and effective on August 2, 1999. Therefore, no data on deaths related to restraint or seclusion use was submitted by providers before August 1999.

[2] The latest data available is through March 2002.

3. Effects on the Medicare and Medicaid Programs

We did not expect the implementation of the new Patients' Rights CoP to generate significant costs to the Medicare or Medicaid programs. We did not believe that there would be any additional costs to the survey and certification program as compliance with this new CoP either would be reviewed through a routine, nonaccredited hospital survey, a validation survey or as part of a complaint survey.

C. Conclusion

The Patients' Rights CoP introduced new Federal requirements that in many instances reflected existing State, accreditation or professional standards. These new Federal requirements are set forth in six standards to ensure minimum protections of each patient's physical and emotional health and safety. These standards address the patients' right to—

- Be notified of his or her rights;
- Exercise his or her rights in regard to his or her care;
- Privacy and safety;
- Confidentiality of and access to his or her medical records;
- Freedom from restraints used in the provision of acute medical and postsurgical care unless clinically necessary; and
- Freedom from restraint and seclusion use to manage violent or aggressive behavior unless clinically necessary.

(Catalog of Federal Domestic Assistance Programs No. 93.773, Medicare—Hospital Insurance and No. 93.778, Medical Assistance Program)

Dated: September 24, 2002.

Thomas A. Scully,

Administrator, Centers for Medicare and Medicaid Services.

Dated: September 26, 2002.

Tommy G. Thompson,

Secretary of Health and Human Services.

[FR Doc. 02–24857 Filed 9–27–02; 9:51 am]

BILLING CODE 4120–01–P

DEPARTMENT OF HEALTH AND HUMAN SERVICES

Centers for Medicare & Medicaid Services

42 CFR Parts 482, 483, and 484

[CMS–3160–FC]

RIN 0938–AM00

Medicare and Medicaid Programs; Conditions of Participation: Immunization Standards for Hospitals, Long-Term Care Facilities, and Home Health Agencies

AGENCY: Centers for Medicare & Medicaid Services (CMS), HHS.

ACTION: Final rule with comment period.

SUMMARY: The provisions of this final rule will remove the Federal barrier related to the requirement for a physician to order influenza and pneumococcal immunizations in Medicare and Medicaid participating hospitals, long-term care facilities, and home health agencies. This final rule will affect vaccine-preventable diseases and will help improve adult vaccination coverage rates. It will facilitate the delivery of appropriate vaccinations in a timely manner, increase the levels of vaccination coverage, and decrease the morbidity and mortality rate of influenza and pneumococcal diseases.

DATES: *Effective date:* These regulations are effective on October 2, 2002.

Comment date: Comments will be considered if we receive them at the appropriate address, as provided below, no later than 5 p.m. on December 2, 2002.

ADDRESSES: In commenting, please refer to file code CMS–3160–FC. Because of staff and resource limitations, we cannot accept comments by facsimile (FAX) transmission or e-mail.

Mail written comments (one original and three copies) to the following address only: Centers for Medicare & Medicaid Services, Department of Health and Human Services, Attention: CMS–3160–FC, P.O. Box 8013, Baltimore, MD 21244–8013.

Please allow sufficient time for mailed comments to be received timely in the event of delivery delays.

If you prefer, you may deliver (by hand or courier) your written comments (one original and three copies) to one of the following addresses: Room 445–G, Hubert H. Humphrey Building, 200 Independence Avenue, SW., Washington, DC 20201, or Room C5–14–03, 7500 Security Boulevard, Baltimore, MD 21244–1850. (Because access to the interior of the HHH Building is not readily available to persons without Federal Government identification, commenters are encouraged to leave their comments in the CMS drop slots located in the main lobby of the building. A stamp-in clock is available for commenters wishing to retain a proof of filing by stamping in and retaining an extra copy of the comments being filed.) Comments mailed to the addresses indicated as appropriate for hand or courier delivery may be delayed and could be considered late.

For information on viewing public comments, see the beginning of the **SUPPLEMENTARY INFORMATION** section.

FOR FURTHER INFORMATION CONTACT: Anita Panicker, RN, MS, LCSW, (410) 786–5646. Jeannie Miller, RN, (410) 786–3164.

SUPPLEMENTARY INFORMATION:

Inspection of Public Comments

Comments received timely will be available for public inspection as they are received, generally beginning approximately three weeks after publication of a document, at the headquarters of the Centers for Medicare & Medicaid Services, 7500 Security Boulevard, Baltimore, Maryland 21244, Monday through Friday of each week from 8:30 a.m. to 4 p.m. To schedule an appointment to view public comments, call (410) 786–7197.

Copies

To order copies of the **Federal Register** containing this document, send your request to: New Orders, Superintendent of Documents, P.O. Box 371954, Pittsburgh, PA 15250–7954. Specify the date of the issue requested and enclose a check or money order payable to the Superintendent of Documents, or enclose your Visa or Master Card number and expiration date. Credit card orders can also be placed by calling the order desk at (202) 512–1800 (or toll-free at 1–888–293–6498) or by faxing to (202) 512–2250. The cost for each copy is $10. As an alternative, you can view and photocopy the **Federal Register** document at most libraries designated as Federal Depository Libraries and at many other public and academic libraries throughout the country that receive the **Federal Register**.

This **Federal Register** document is also available from the **Federal Register** online database through *GPO Access,* a service of the U.S. Government Printing Office. The Web site address is: *http://www.access.gpo.gov/nara/index.html.*

I. Background

A. Conditions of Participation: Immunization Standards for Hospitals, Long-Term Care Facilities, and Home Health Agencies

1. Influenza and Related Conditions

Influenza and pneumonia combined represent the fifth leading cause of death in the elderly. The 1999 RAND report prepared for the Centers for Medicare & Medicaid Services (CMS), ''Interventions that Increase the Utilization of Medicare-Funded Preventive Services for Persons Age 65 and Older,'' states that ''influenza and consequent respiratory diseases are common causes of morbidity and mortality in the United States each year, with 20,000 to 40,000 deaths reported for each influenza epidemic. Over 90 percent of these deaths occur among those age 65 or older.'' The report also states that influenza vaccination ''has been shown to be efficacious in the elderly, decreasing hospitalizations by 27 percent to 57 percent and deaths by 27 percent to 30 percent.'' (*http://www.cms.hhs.gov/healthyaging/2a.asp*.)

The Center for Health Research, a part of the Kaiser Permanente managed care organization, studied the cost-effectiveness of influenza vaccination over nine flu seasons in its northwest region in a study published in 1993. The study examined experiences of some 69,000 elderly members of the health maintenance organization who experienced 3,105 outpatient pneumonia and influenza episodes, 894 hospitalizations, and 113 pneumonia and influenza deaths. The estimated cost of providing a vaccination was $7.11; average medical care costs for outpatient and inpatient episodes were $106 and $5,730, respectively, for high-risk elderly patients, and $141 and $4,477 for non-high-risk elderly patients. A similar study examined the cost-effectiveness of vaccinating elderly members of a Minnesota health plan against influenza over three seasons beginning in 1990. The plan, Group Health Inc. of Minneapolis, vaccinated 45 percent to 58 percent of its members over age 64. Vaccinated individuals had lower hospitalization rates for flu, pneumonia, congestive heart failure, and other illness, for an average savings of $117 per vaccinated member. (''The costly toll of vaccine-preventable disease.'' Business and Health; Montvale; 1995; (13)(3)16; Leavenworth, Geoffrey.)

Despite the availability of safe and effective vaccines and substantial progress in reducing vaccine-preventable diseases, improving the delivery of the vaccines is vital to further reduce and eliminate vaccine-preventable causes of morbidity and mortality. The administration of influenza and pneumococcal polysaccharide vaccines per standing orders, governed by the physician-approved policies and procedures of the facility or agency, after assessments for contraindications, is the most consistently effective method for increasing adult vaccination rates and the least burdensome to implement.

Influenza vaccine is the primary method for preventing influenza and its more severe complications. The Advisory Committee on Immunization Practices (ACIP) reported in 2002 that the primary target group for influenza vaccination includes persons who are at high risk for serious complications from influenza, including approximately 35 million persons who are more than 65 years of age, and approximately 33 to 39 million persons less than 65 who have chronic underlying medical conditions. Beginning with the 2000 to 2001 influenza season, the ACIP has added persons aged 50 to 64 years to the primary target group for annual influenza vaccination. This age group was added because a substantial proportion of persons aged 50 to 64 years (estimated at between 24 percent and 32 percent of the total population) have one or more chronic medical conditions that place them at high risk for influenza-related hospitalization and death. Rates of influenza-related excess hospitalization among adults younger than age 65 years old with one or more high-risk conditions have been estimated at 392 to 635 per 100,000 persons compared with 13 to 23 per 100,000 among those without high-risk conditions. There are minimal adverse reactions or side effects related to influenza vaccines because, as the Morbidity and Mortality Weekly Report (MMWR) states, ''inactivated influenza vaccine contains noninfectious killed viruses and cannot cause influenza.'' The most frequent side effect of vaccination is soreness at the vaccination site that lasts less than 2 days. Fever, malaise, myalgia, and other systemic symptoms can occur but recent placebo-controlled trials demonstrate that among older persons and healthy

young adults, administration of split-virus influenza vaccine is not associated with higher rates of such systemic symptoms when compared with placebo injections. The potential benefits of influenza vaccination in preventing serious illness, hospitalization, and death greatly outweigh the vaccine reactions. (''Prevention and control of influenza: recommendations of the Advisory Committee on Immunization Practices (ACIP).'' MMWR 51; RR03, (April 12, 2002) (''ACIP Recommendations'')). The availability of safe and effective vaccines and substantial progress in the direction of reducing vaccine-preventable diseases has not produced the expected outcome, due to the lack of proper delivery in a timely manner to the targeted populations.

The Centers for Medicare & Medicaid Services and the Centers for Disease Control and Prevention (CDC) recognize the major impact of both influenza and pneumococcal disease on the residents of long-term care facilities, and the effectiveness of vaccines in reducing health care costs by preventing illness and hospitalization, and have collaborated to improve immunization coverage through standing orders. The goal is to immunize at least 90 percent of the institutionalized population to meet our Healthy People 2010 objectives through a national quality improvement program and to promote standing orders for immunization programs to ensure that all nursing facility residents are assessed for and offered influenza and pneumococcal vaccinations. (For more information on our Healthy People 2010 immunization goals and health objectives for the nation, in general, please *see http://www.health.gov/healthypeople*.) Standing orders programs authorize licensed practitioners, where allowed by State law, to administer vaccinations, after assessment for contraindications, according to a physician-approved facility or agency policy without the need for a physician's order. One of the key findings of the 1999 RAND report is that organizational changes are effective in improving the delivery of preventive services. Standing orders are a type of organizational change that allow appropriate non-physician staff to offer vaccinations, after assessment for contraindications, without an individual physician order, according to the facility or agency policy. The ACIP recommends implementing standing orders in nursing homes and hospitals. We have included home health agencies (HHAs) in this rule as providing vaccines in settings accessible to adults is critical and the need to use transportation to reach a health-care provider is a barrier to receiving preventive services. This barrier may be eliminated by offering vaccines in such convenient locations as homes, where HHAs already provide other services.

2. Why a Change in the Conditions of Participation Is Needed

The Conditions of Participation (CoPs) are Federal requirements that establish basic health and safety standards that providers of health care services, such as hospitals and LTCFs, must meet in order to participate in the Medicare and Medicaid programs. However, the protection afforded by the Medicare and Medicaid CoPs apply to all patients regardless of payer source. Although the goal of the changes to the CoPs is to increase adult immunizations, the changes brought about by this rule could also be used by hospitals, HHAs, and LTCFs to implement immunization policies to improve flu and pneumonia immunization rates for children and adolescents.

The provisions of the final rule will remove the Federal barrier related to the physician's order requirement for influenza and pneumococcal immunizations in Medicare and Medicaid participating hospitals, long-term care facilities (LTCFs), and HHAs. Preventing morbidity and mortality due to severe influenza and its complications is one of the goals of this regulation. During the influenza season, hospitalization rates for high-risk populations increase two to five-fold, depending on the age group. Influenza-associated mortality is a major concern for persons with chronic diseases; this mortality increase is most marked in persons 65 years of age or older, with more than 90 percent of the deaths attributed to pneumonia and influenza occurring in persons of this age group. (''Prevention and Control of Influenza Indications for Influenza Vaccine.'' Disease Prevention News, Vol. 57, No. 20, September 20, 1997.) The proportion of elderly persons in the U.S. population is increasing, and age and its associated chronic diseases can increase the severity of influenza illness. Unless control measures are more vigorously implemented, the number of deaths from influenza and its complications is expected to increase.

According to the article, each year, more people die of pneumococcal pneumonia alone than die of breast cancer and AIDS combined. According to the CDC, an estimated 40,000 deaths annually in the United States are attributed to pneumococcal infection. Immunization of high-risk persons could prevent up to half of these deaths. As of 1993, Medicare began reimbursing providers for influenza vaccine and its administration (*http://cms.hhs.gov/preventiveservices/2a.asp*). However, only 23 percent of one of the highest-risk groups, persons aged 65 years and older, had received vaccination against pneumococcal disease. Section 4107 of the Balanced Budget Act of 1997 ''extended the influenza and pneumococcal vaccination campaign conducted by CMS in conjunction with CDC and the National Coalition for Adult Immunization through fiscal year 2002, authorizing $8 million for each fiscal year from 1998 to 2002.'' Even with these changes in Medicare reimbursements, the rates of immunization did not improve as anticipated. A tragic example of these national trends occurred in Texas. In January 1997, a local health department alerted the Texas Department of Health to three laboratory-confirmed *Streptococcal pneumoniae* infections at a Northeast Texas nursing home with 90 residents. Pneumococcal vaccine had been administered to only 10 (11 percent) of the residents before the outbreak. The remaining nursing home residents were promptly vaccinated and given antibiotics to prevent further cases. However, two of the three patients with laboratory-confirmed infections died. A decade of use has confirmed the efficacy and safety of the current vaccine against pneumococcal disease. Moreover, the vaccine is inexpensive, and Medicare reimburses its cost.

In summary, immunizations save lives and can help avoid needless suffering and unnecessary costs caused by complications from various infectious diseases, and, as many family members and health care workers know, they can prevent the infection of others. However, despite the availability of safe and effective vaccines, substantial portions of susceptible adults are not being immunized. Our report in 2000 on the 1999 data indicate that 35 percent of the population age 65 or older has received the pneumococcal vaccine and 45 percent of the population age 65 or older has been immunized against the flu (*http://cms.hhs.gov/preventiveservices/2d.asp*). To reduce the morbidity and mortality rates, delivering appropriate vaccinations in a timely manner is vital. Maintaining high levels of vaccination coverage and low rates of vaccine-preventable diseases is the goal of this final rule. Standing orders will decrease vaccine-preventable diseases and improve adult

vaccination rates because they are the most consistently effective method for increasing adult vaccination rates and are easy to implement.

The report on ''Use of Standing Orders Programs to Increase Adult Vaccination Rates'' (MMWR 2000/49 RR01 15–26, March 24, 2000) (Standing Orders Report)), briefly reviews the evidence on the effectiveness of standing orders programs, describes standards for program implementation, and recommends initiating these programs to improve immunization coverage in several traditional and nontraditional settings. The report states that in recent years, a rapid emergence of antimicrobial resistance among pneumococci, especially to penicillin, has occurred. Increasing pneumococcal vaccination rates could help prevent invasive pneumococcal disease caused by vaccine-type, multidrug-resistant pneumococci. Outbreaks of pneumococcal disease caused by a single drug-resistant pneumococcal serotype have occurred in institutional settings, including nursing homes. The same MMWR report states that in 1999, because of concerns about pneumococcal antimicrobial resistance and underuse of pneumococcal vaccine, the American Medical Association and several partner organizations issued a Quality Care Alert that supports ACIP's recommendations for pneumococcal vaccination.

II. Provisions of the Final Rule

A. Conditions of Participation: Immunization Standards for Hospitals, Long-Term Care Facilities, and Home Health Agencies

The provisions of the final rule will remove the Federal barrier related to the physician's order requirement for influenza and pneumococcal immunizations in Medicare and Medicaid participating hospitals, LTCFs and HHAs, that have such a requirement. In developing a facility or agency policy for immunizing patients/residents, there must be input from the medical director or a physician. We discuss examples of core aspects of facility policy under the direction of the medical director or a physician below. However, this policy is not limited to these examples, and the specific circumstances of each beneficiary must be taken into account.

The most basic and vital aspect of facility policy must be patient assessment. Patient assessment is a mandatory element of professional practice standards for any procedure performed. This requirement, therefore, is not an exception, or a new practice even though we wish to emphasize its importance here. Assessment of possible contraindications must be carried out before vaccines are administered. Inactivated influenza vaccine should not be administered, for example, to persons known to have anaphylactic hypersensitivity to eggs, or to other components of the influenza vaccine, without first consulting a physician. Prophylactic use of antiviral agents is an option for preventing influenza among these persons. However, persons who have a history of anaphylactic hypersensitivity to vaccine components but who are also at high risk for complications from influenza can benefit from the vaccine after appropriate allergy evaluation and desensitization. Information regarding vaccine components can be found in package inserts from each manufacturer. Similarly, persons with acute febrile illness usually should not be vaccinated until their symptoms have abated. However, minor illnesses with or without fever do not contraindicate the use of the influenza vaccine, particularly among children with mild upper respiratory tract infection or allergic rhinitis (ACIP Recommendations). The Standing Orders Report states that standing orders protocols should also specify that vaccines be administered by healthcare professionals trained to (a) screen patients for contraindications to vaccination, (b) administer vaccines, and (c) monitor patients for adverse events, in accordance with State and local regulations.

1. Hospitals

We are changing the current requirements in the first sentence of our condition of participation for hospitals, at 42 CFR. 482.23(c)(2), to read ''All orders for drugs and biologicals must be in writing and signed by the practitioner or practitioners responsible for the care of the patient as specified under § 482.12(c) with the exception of influenza and pneumococcal polysaccharide vaccines, which may be administered per physician-approved hospital policy after an assessment for contraindications.''

The September 2000 issue of the Journals of Gerontology includes an article that refers to a study that reviewed hospitals' data on influenza vaccination rates among hospitalized older adults that showed that in-hospital influenza vaccination rates for older adults were well below 5 percent (''Standing Orders for Influenza Vaccination Increased Vaccination Rates in Inpatient Settings Compared with Community Rates.'' The Journals of Gerontology; Washington; Sep 2000; Vol. 55A; 9; M522–M526; Fiona Lawson; Vicki Baker; Dick Au; Janet E. McElhaney). The main barrier to vaccination was the requirement for a physician's order; other issues were that most of the medical staff did not view vaccination as a priority, or were concerned that vaccination might not be effective or might complicate the patient's course of treatment while in the hospital. Because an educational program was predicted to be ineffective for changing in-hospital practices of the attending staff, an influenza immunization program using a standing order under the principal investigator for the study was designed. The purpose of the study was to increase vaccination rates in this very high-risk group of hospitalized older adults. The result after implementation of the inpatient immunization program was an increase of 22 percent in the immunization rate. The study also found that in spite of many unvaccinated patients indicating that they would be vaccinated after discharge, only 1 percent were vaccinated in the community after discharge from the hospital.

Specific recommendations for hospital-based immunization were first published by ACIP in the 1980s—for influenza vaccine in 1986, and for pneumococcal vaccine in 1989. These recommendations were included in the Standards of Adult Immunization Practice that were issued by the National Coalition for Adult Immunization in 1990, and appeared in the second edition of the American College of Physicians' Guide for Adult Immunization (1990). Soon thereafter, hospital-based influenza and pneumococcal vaccination was recommended in the National Vaccine Advisory Committee's report on adult immunization and in a critical report published by the General Accounting Office. Subsequently, this strategy was included in the action plan for adult immunizations developed by the CDC and CMS, and was later endorsed by the Task Force on Community Preventive Services. It also was emphasized in a comprehensive report prepared for CMS by the RAND Corporation to provide evidence-based recommendations for increasing the use of Medicare-funded preventive-care services. (''Hospital-Based Influenza and Pneumococcal Vaccination: Sutton's Law Applied to Prevention,'' David S. Fedson, MD; Peter Houck, MD; Dale Bratzler, DO, MPH, Infection Control and Hospital Epidemiology, Volume 21(11) (692–699), November 2000.) (Fedson).

The most remarkable example of success with hospital-based

immunization is the program that was conducted at the Minneapolis Veterans Affairs Medical Center since 1984. This hospital-wide program initially focused on influenza vaccination of outpatients and used a combination of administrative, organizational, and patient oriented interventions. No specific attempts were made to involve physicians. Instead, the program was implemented by nurses according to a hospital policy that allowed them to vaccinate patients without a signed physician's order. By 1987, the program was vaccinating 60 percent of the hospital's elderly outpatients; by the late 1990s, almost 90 percent were regularly receiving influenza vaccine, most of them through the hospital's program.

Among successful programs for hospital-based influenza and pneumococcal vaccinations, a standing order is probably the most important feature. The ACIP has specifically recommended that standing orders be used to increase adult vaccination rates in all settings. Furthermore, none of the successful programs described thus far in the literature has depended on active physician participation. Instead, nurses or pharmacists have been responsible for their implementation. (Fedson, 692–699).

2. Long-Term Care Facilities

We are changing our current regulations in the Conditions of Participation for LTCFs at § 483.40 (b)(3) to read ''the physician must sign and date all orders with the exception of orders for the administration of influenza and pneumococcal polysaccharide vaccines, which may be administered per physician-approved facility policy after an assessment for contraindications.''

There were 1,590,763 individuals over 65 years of age in LTCFs in the United States in 1990, and the number is estimated to grow to 2.9 million by 2020. (''Increasing Pneumococcal Vaccination Rates Among Residents of Long-Term Care Facilities: Provider-Based Improvement Strategies Implemented by Peer-Review Organizations in Four Western States.'' Kurt B. Stevenson, MD; John W. McMahon, Sr, MD; Jan Harris, MSHA, CHE; J. Richard Hillman, MD; Steven D. Helgerson, MD, MPH. Infection Control and Hospital Epidemiology, Volume 21 (11) (705–710) November 2000). (Stevenson). A substantial increase in vaccination rates among such a large population will prevent a significant number of cases of influenza and pneumococcal bacteremia and related deaths. Standing orders appear to be one intervention effective in sustaining successful vaccination efforts.

3. Home Health Agencies

We are changing the first sentence of the current requirements in the CoPs at § 484.18(c) for HHAs to read ''drugs and treatments are administered by agency staff only as ordered by the physician, with the exception of influenza and pneumococcal polysaccharide vaccines, which may be administered per agency policy developed in consultation with a physician, and after an assessment for contraindications.'' HHA staff must include the immunization information on the patient's plan of care, although a physician's order is not required for influenza and pneumoccal vaccines.

Providing vaccines in settings readily accessible to adults who are most in need of the services is critical. For many adults, the need to use transportation to reach a healthcare provider is a barrier to receiving preventive services. This barrier may be eliminated by offering preventive services (for example, administration of vaccines) in convenient locations such as the patient's home. Eliminating the need for making an appointment in advance and avoiding the waiting time often associated with a clinic or office visit are factors that also might increase the opportunities for some adults to receive needed vaccinations. (''Adult Immunization Programs in Nontraditional Settings: Quality Standards and Guidance for Program Evaluation; A Report of the National Vaccine Advisory Committee.'' MMWR 49 (RR01)1–13. March 24, 2000.)

The 1999 RAND report states that the proportion of the U.S. population over age 65 has increased from 5 percent in 1900 to 13 percent in 1997. This change in demographics, combined with an increase in average life expectancy, has highlighted the importance of preventive care services for older individuals. According to an October 1997 JAMA article, vaccination of elderly people against pneumococcal bacteremia is one of the few interventions that have been found to both improve health and save medical costs. (''Cost-effectiveness of Vaccination Against Pneumococcal Bacteremia Among Elderly People.'' *JAMA;* Chicago; Oct 22–Oct 29, 1997; 278;16; Jane E Sisk; Alan J Moskowitz; William Whang; Jean D Lin; *et al.*)

III. Response to Comments

Because of the large number of items of correspondence we normally receive on **Federal Register** documents published for comment, we are not able to acknowledge or respond to them individually. We will consider all comments we receive by the date and time specified in the **DATES** section of this preamble, and, when we proceed with a subsequent document, we will respond to the comments in the preamble to that document.

IV. Waiver of Proposed Rulemaking

We ordinarily publish a notice of proposed rulemaking in the **Federal Register** and invite public comment on the proposed rule. The notice of proposed rulemaking includes a reference to the legal authority under which the rule is proposed, and the terms and substance of the proposed rule or a description of the subjects and issues involved. This procedure can be waived, however, if an agency finds good cause that a notice-and-comment procedure is impracticable, unnecessary, or contrary to the public interest, and incorporates a statement of the finding and its reasons in the rule issued.

The delay in publishing this rule would be extremely detrimental to the health of beneficiaries, as epidemics of influenza typically occur during the winter months and are responsible for an average of approximately 20,000 to 40,000 deaths per year in the United States. Influenza viruses also can cause pandemics, during which rates of illness and death from influenza-related complications can increase dramatically. Rates of infection are highest among children, but rates of serious illness and death are highest among persons older than 65 years of age and persons of any age who have medical conditions that place them at increased risk for complications from influenza and pneumonia. Vaccines are the most effective means to protect against many complications related to influenza and pneumonia. The ACIP recommendations for 2002 to 2003 to decrease the risk of influenza state that the optimal time for influenza vaccinations is October through November. Therefore, it is imperative that this rule is published as a final rule immediately and the immunization process be implemented without delay this year so that influenza-related complications can be prevented. The goal of CMS and CDC, to immunize at least 90 percent of the adult population to meet the Healthy People 2010 objectives, can be attained earlier if the barrier requiring a physician's order is removed as soon as possible. Even though pneumococcal vaccines can be administered throughout the year the percentage of patients and or residents immunized remains low. Therefore, this final rule will be a vehicle to improve

coverage and will be consistent with the Healthy People 2010 objectives.

V. Waiver of Effective Date

We believe that a continued delay in implementation of this final rule would greatly hinder increased immunizations of beneficiaries in the affected facilities before the onset of this year's flu season. As a result, we have concluded that, in this instance, a notice-and-comment period, and a further delay in this rule's effective date is unnecessary and contrary to the public interest. We find, on this basis, that there is good cause for waiving the notice-and-comment period and for establishing this immediate effective date under 5 U.S.C. section 808(2).

VI. Collection of Information Requirements

This document does not impose information collection and recordkeeping requirements. Consequently, this document does not need to be reviewed by the Office of Management and Budget under the authority of the Paperwork Reduction Act of 1995.

VII. Regulatory Impact

A. Overall Impact

We have examined the impact of this rule as required by Executive Order 12866 (September 1993, Regulatory Planning and Review), the Regulatory Flexibility Act (RFA) (September 16, 1980, Pub. L. 96–354), section 1102(b) of the Social Security Act, the Unfunded Mandates Reform Act of 1995 (Pub. L. 104–4), and Executive Order 13132.

Executive Order 12866 directs agencies to assess all costs and benefits of available regulatory alternatives and, if regulation is necessary, to select regulatory approaches that maximize net benefits (including potential economic, environmental, public health and safety effects, distributive impacts, and equity). A regulatory impact analysis (RIA) must be prepared for major rules with economically significant effects ($100 million or more in any one year). This rule removes the barrier for an individual physician's order to be necessary to administer influenza and pneumococcal polysaccharide vaccines and is a requirement that has benefits in improving patient and resident health and in reducing health care spending. While it is not possible at this point to determine definitively the additional costs to the Medicare and Medicaid programs from increased immunizations resulting from this rule, we believe that the impact will be below the threshold of $100 million and will not be economically significant.

The RFA requires agencies to analyze options for regulatory relief of small businesses. For purposes of the RFA, small entities include small businesses, nonprofit organizations, and government agencies. Most hospitals and most other providers and suppliers are small entities, either by nonprofit status or by having revenues of $6 to $29 million in any one year. For purposes of the RFA, all hospitals, LTCFs, and HHAs, are considered to be small entities. Individuals and States are not included in the definition of a small entity. For these reasons, we are not preparing analyses for either the RFA or section 1102(b) of the Act because we have determined, and we certify, that this rule will not have a significant economic impact on a substantial number of small entities or a significant impact on the operations of a substantial number of small rural hospitals.

In addition, section 1102(b) of the Act requires us to prepare a regulatory impact analysis if a rule may have a significant impact on the operations of a substantial number of small rural hospitals. This analysis must conform to the provisions of section 604 of the RFA. For purposes of section 1102(b) of the Act, we define a small rural hospital as a hospital that is located outside of a Metropolitan Statistical Area and has fewer than 100 beds. This regulation does not have any impact on small rural hospitals that would be burdensome; instead rural hospitals will benefit from the implementation of the rule, as the overall cost associated with treating influenza and pneumococcal disease will be reduced.

Section 202 of the Unfunded Mandates Reform Act of 1995 also requires that agencies assess anticipated costs and benefits before issuing any rule that may result in expenditure in any one year by State, local, or tribal governments, in the aggregate, or by the private sector, of $110 million. This rule will not have any effect on the governments mentioned or on private sector costs.

Executive Order 13132 establishes certain requirements that an agency must meet when it promulgates a proposed rule (and subsequent final rule) that imposes substantial direct requirement costs on State and local governments, preempts State law, or otherwise has Federalism implications. This final rule will not have any effect on State or local governments. The costs related to the influenza and pneumococcal polysaccharide vaccines are currently a covered benefit for beneficiaries. In fact, this rule will remove the barriers that may have impacted the flexibility of State law in implementing immunization related requirements.

B. Anticipated Effects of the Immunization Standards

1. Effects on Hospitals, LTCFs, and HHAs

We expect that these providers will benefit from the implementation of this rule, as prevention of influenza and pneumonia will lower hospitalization rates, resulting in cost reductions.

2. Effects on Other Providers

We do not expect the provisions of this final rule to affect other providers.

3. Effects on the Medicare and Medicaid Programs

While it is not possible at this point to determine definitively the additional costs to the Medicare and Medicaid programs from increased immunizations resulting from this rule, we believe that, due to the low cost for the immunizations, any budget impact to these programs would be negligible. Moreover, increased immunizations may help reduce the estimated $12 billion dollars in direct and indirect costs to society annually during severe influenza epidemics. Moderate epidemics cause more than 20,000 to 40,000 hospitalizations and estimated direct costs of up to $1 billion per year. (''It Pays to Immunize Adults.'' Therese M. Droste. Business and Health; Montvale. Sep. 1998; 16; 8–11.) According to the 1997 JAMA article, the first pneumococcal polysaccharide vaccine was marketed in the United States almost 20 years ago, and two Federal studies have assessed its cost-effectiveness in preventing pneumococcal pneumonia in elderly people (JAMA; Oct 22–29, 1997; 278:1333–1339). In both analyses, vaccination was found to be cost-effective, that is, a reasonable investment for the health benefits gained. This article also states that even though savings cost is not the appropriate criterion for assessing an intervention, the issue is whether the investment in an intervention is worth the health benefits to be gained. Based on other interventions, policymakers have generally considered costs up to $50,000 or even $100,000 to be worth an extra year of healthy life. In that light, even worst-case estimates for pneumococcal vaccination through age 84 years would be deemed cost-effective.

In 2001, Medicare payments for flu and pneumococcal immunizations

totaled $145,885,773. This figure represents Medicare payments for such immunizations furnished in all settings, including, but not limited to, hospitals, nursing homes, and HHAs. Immunization experts working under contract to CMS estimate that implementation of this rule will increase immunization rates by 10 percent. Therefore, we generally estimate that broad implementation of standing orders as allowed by this rule will increase Medicare immunization expenditures by $14,588,577 above the 2001 expenditure.

These cost-effectiveness results provide a compelling case for clinical and public policy to more forcefully promote pneumococcal vaccination for elderly people in the United States. They thus add support on economic grounds to public and private efforts already under way. (JAMA; Oct 22–29; 1997; 278:16)

C. Alternatives Considered

1. Immunization Standards for Hospitals, Long-Term Care Facilities, and Home Health Agencies

An alternative would be to keep the present rules, as they are written. The current regulations, however, inhibit our ability to increase the rate of immunizations and to accomplish our goal to immunize at least 90 percent of the institutionalized population.

Another alternative would be to educate providers on the value of influenza and pneumococcal vaccines while maintaining the Federal barrier requiring a physician's order for every vaccine given in these provider types. Studies previously referred to, however, show that this has not been very effective in improving immunization rates.

D. Conclusion

Increasing the utilization of Medicare-funded preventive services is the goal of both CMS and CDC, and this final rule will facilitate the delivery of appropriate vaccinations in a timely manner, increase the levels of vaccination rate, and decrease the morbidity and mortality rate of influenza and pneumococcal diseases.

In accordance with the provisions of Executive Order 12866, this regulation was reviewed by the Office of Management and Budget.

List of Subjects

42 CFR Part 482

Grant programs-health, Hospitals, Medicaid, Medicare, Reporting and recordkeeping requirements.

42 CFR Part 483

Grant programs-health, Health facilities, Health professions, Health records, Medicaid, Medicare, Nursing homes, Nutrition, Reporting and recordkeeping requirements, Safety.

42 CFR Part 484

Health facilities, Health professions, Medicare, Reporting and recordkeeping requirements.

For the reasons set forth in the preamble, the Centers for Medicare & Medicaid Services amends 42 CFR chapter IV as set forth below:

PART 482—CONDITIONS OF PARTICIPATION FOR HOSPITALS

1. The authority citation for part 482 continues to read as follows:

Authority: Secs. 1102 and 1871 of the Social Security Act (42 U.S.C. 1302 and 1395hh).

Subpart C—Basic Hospital Functions

2. In § 482.23, the first sentence of paragraph (c)(2) is revised to read as follows:

§ 482.23 Condition of participation: Nursing services.

* * * * *

(c) * * *

(2) All orders for drugs and biologicals must be in writing and signed by the practitioner or practitioners responsible for the care of the patient as specified under § 482.12(c) with the exception of influenza and pneumococcal polysaccharide vaccines, which may be administered per physician-approved hospital policy after an assessment for contraindications. * * *

* * * * *

PART 483—REQUIREMENTS FOR STATES AND LONG-TERM CARE FACILITIES

1. The authority citation for part 483 continues to read as follows:

Authority: Secs. 1102 and 1871 of the Social Security Act (42 U.S.C. 1302 and 1395hh).

Subpart B—Requirements for Long-Term Care Facilities

2. In § 483.40, paragraph (b)(3) is revised to read as follows:

§ 483.40 Physician services.

* * * * *

(b) * * *

(3) Sign and date all orders with the exception of influenza and pneumococcal polysaccharide vaccines, which may be administered per physician-approved facility policy after an assessment for contraindications.

* * * * *

PART 484—HOME HEALTH SERVICES

1. The authority citation for part 484 continues to read as follows:

Authority: Secs. 1102 and 1871 of the Social Security Act (42 U.S.C. 1302 and 1395hh) unless otherwise indicated.

2. In § 484.18 the first sentence of paragraph (c) is revised to read as follows:

§ 484.18 Condition of participation: Acceptance of patients, plan of care, and medical supervision.

* * * * *

(c) *Standard: Conformance with physician orders.* Drugs and treatments are administered by agency staff only as ordered by the physician with the exception of influenza and pneumococcal polysaccharide vaccines, which may be administered per agency policy developed in consultation with a physician, and after an assessment for contraindications. * * *

(Catalog of Federal Domestic Assistance Program No. 93.778, Medical Assistance Program)
(Catalog of Federal Domestic Assistance Program No. 93.773, Medicare—Hospital Insurance; and Program No. 93.774, Medicare—Supplementary Medical Insurance Program)

Dated: July 23, 2002.

Thomas A. Scully,

Administrator, Centers for Medicare & Medicaid Services.

Approved: August 28, 2002.

Tommy G. Thompson,

Secretary.

[FR Doc. 02–25096 Filed 10–1–02; 8:45 am]

BILLING CODE 4120–01–P

FEDERAL COMMUNICATIONS COMMISSION

47 CFR Part 25

[IB Docket 99–67; RM 9165; FCC 02–134]

Petition of the National Telecommunications and Information Administration To Amend the Commission's Rules To Establish Emission Limits for Mobile and Portable Earth Stations Operating in the 1610–1660.5 MHz Band

AGENCY: Federal Communications Commission.

ACTION: Final rule.

SUMMARY: In this document the Commission adopts a new rule section,

that specifies limits on the permissible strength of out-of-band emissions from mobile earth stations in order to prevent interference with use of GPS or similar satellite radionavigation services for airplane guidance during approach to landing.

DATES: Effective November 1, 2002.

FOR FURTHER INFORMATION CONTACT: William Bell at (202) 418–0741 (Internet: *bbell@fcc.gov*) or Marcus Wolf at (202) 418–0736 (Internet: *mwolf@fcc.gov*), International Bureau, Federal Communications Commission, Washington, DC 20554.

SUPPLEMENTARY INFORMATION: This is a summary of the Commission's Report and Order in IB Docket No. 99–67, FCC 02–134, adopted May 2, 2002 and released on May 14, 2002. In a Notice of Proposed Rulemaking adopted in 1999, 64 FR 16687 (April 6, 1999), the Commission proposed to adopt a new rule section specifying limits on the permissible strength out-of-band emissions from mobile earth stations in order to prevent interference with use of GPS of similar satellite radionavigation services for airplane guidance during approach to landing. After considering relevant public comments, the Commission has decided to adopt the proposed new rule section. The complete text of this decision is available for inspection and copying during normal business hours in the FCC Reference Center (Room), 445 12th Street, SW., Washington, DC 20554, and also may be purchased from the Commission's copy contractor, International Transcription Service, Inc. (ITS, Inc.), 1231 20th Street, NW., Washington, DC 20036, (202) 857–3800.

Paperwork Reduction

This Report and Order requires either new or modified information collections subject to the Paperwork Reduction Act of 1995 (PRA), Public Law 104–13. It will be submitted to the Office of Management and Budget (OMB) for review under the emergency processing provisions of the PRA. The Commission invites the public and other Federal agencies to comment on information collection(s) required by this Report and Order. Comments should address: (a) Whether the new or modified collection of information is necessary for the proper performance of the functions of the Commission, including whether the information shall have practical utility; (b) the accuracy of the Commission's burden estimates; (c) ways to enhance the quality, utility, and clarity of the information collected; and (d) ways to minimize the burden of the collection of information on the respondents, including the use of automated collection techniques or other forms of information technology.

Public and agency comments on the request for approval of the information collection requirements are due December 2, 2002. All comments regarding the requests for approval of the information collection should be submitted to Judy Boley Herman, Federal Communications Commission, Room 1–C804, 445 12th Street, SW., Washington, DC 20554, or via the Internet to *jbHerman@fcc.gov.* In addition, comments on the emergency request for approval of the information collections should be submitted to Jeanette Thornton, OMB Desk Officer, Room 10236 NEOB, 725 17th Street, NW., Washington, DC 20503, or via the Internet *tojthornto@mb.eop.gov.*

Final Regulatory Flexibility

The Regulatory Flexibility Act of 1980, as amended (''RFA''), requires a regulatory flexibility analysis to be prepared for notice-and-comment rulemaking proceedings, unless the agency certifies that ''the rule will not, if promulgated, have a significant economic impact on a substantial number of small entities.'' As required by the RFA, the original Notice of Proposed Rulemaking in this proceeding included an Initial Regulatory Flexibility Analysis (''IRFA''). The Commission invited written public comment on the rulemaking proposal and on the IRFA. This Final Regulatory Flexibility Analysis is also included in compliance with the RFA.

A. Need for and Objectives of This Report and Order

The purpose of this Report and Order is to adopt a rule specifying limits on the permissible strength of emissions produced by mobile earth stations outside their assigned frequency bands, in order to prevent interference with aircraft reception of satellite radionavigation signals in the 1559–1610 MHz band.

B. Summary of Significant Issues Raised by Public Comments in Response to the IRFA

None of the comments filed in this proceeding discussed the IRFA.

C. Description and Estimate of the Number of Small Entities To Which the New Rule Will Apply

The RFA directs agencies to provide a description of, and when feasible, an estimate of the number of, small ''entities'' that may be affected by the rules they adopt. The RFA generally defines the term ''small entity'' as referring to a ''small business,'' ''small organization,'' or ''small governmental jurisdiction.'' The term ''small business'' has the same meaning as the term ''small business concern'' under the Small Business Act. A ''small business concern'' is one which: (1) Is independently owned and operated; (2) is not dominant in its field of operation; and (3) satisfies any additional criteria established by the Small Business Administration (SBA).

For satellite telecommunications carriers and resellers, the SBA established a small business size standard that excludes companies with annual receipts in excess of $12.5 million. Ten companies are currently licensed for operation of 1.6 GHz mobile earth stations subject to the rule requirements we are adopting in this order. We have ascertained from published data that four of those companies are not small entities according to the SBA's definition, but we do not have sufficient information to determine which, if any, of the other six are small entities. We anticipate issuing several licenses for 2 GHz mobile earth stations subject to the requirements we are adopting here. We do not know how many of those licenses will be held by small entities, however, as we do not yet know exactly how many 2 GHz mobile-earth-station licenses will be issued or who will receive them.

D. Description of Projected Reporting, Recordkeeping, and Other Compliance Requirements for Small Entities

In this Report and Order, the Commission prescribes limits on the permissible strength of emissions in the 1559–1610 MHz frequency band that may be generated by mobile earth stations with assigned transmission frequencies between 1610 MHz and 1660.5 MHz or between 1990 MHz and 2025 MHz. Those licensed by the Commission to operate, or supervise operation of, such mobile earth stations will be obliged to ensure that the equipment covered by their licenses performs in compliance with the new emission restrictions. Some licensees may find it necessary to alter, replace, or decommission equipment currently in service in order to comply. We do not know, nor do the comments filed in this proceeding indicate, how much expense the pertinent companies may incur to achieve compliance with the new emission limits. The rule we are adopting here does not impose reporting or recordkeeping requirements.

E. Steps Taken To Minimize Significant Economic Impact on Small Entities, and Significant Alternatives Considered

The RFA requires an agency to describe any significant alternatives that it has considered that might reduce economic impact on small entities, such as: establishing different compliance or reporting requirements or timetables that take into account the resources available to small entities; clarifying, consolidating, or simplifying such requirements for small entities; using performance rather than design standards; or completely or partially exempting small entities from new requirements.

We have not considered exempting small entities from the emission limits we are adopting here or prescribing more lenient requirements or compliance timetables for small entities, as we do not believe that such measures could be effected without thwarting fulfillment of our regulatory objective of preventing interference. We have taken steps, however, to minimize adverse impact on affected licensees. Most notably, in the interest of minimizing consequent equipment obsolescence, we have decided to exempt equipment currently in service from full compliance until January 1, 2005.

Report to Congress: The Commission will send a copy of this Report and Order, including a copy of this Final Regulatory Flexibility Analysis (''FRFA''), in a report to Congress pursuant to the Congressional Review Act. The Commission will also send a copy of this Report and Order and FRFA to the Chief Counsel for Advocacy of the SBA, and a copy of the Report and Order and FRFA (or a summary thereof) will be published in the **Federal Register**.

Ordering Clauses

It is ordered that, pursuant to sections 4(i), 7(a), 303(c), 303(f), 303(g), and 303(r) of the Communications Act of 1934, as amended, 47 U.S.C. 154(i), 157(a), 303(c), 303(f), 303(g), 303(r), 307, 309(a), 310, part 25 of the Commission's rules is amended, as specified in the rule changes, effective November 1, 2002.

It is further ordered that the Commission's Consumer Information Bureau, Reference Information Center, shall send a copy of this Report and Order the Final Regulatory Flexibility Analysis, to the Chief Counsel for Advocacy of the Small Business Administration.

List of Subjects in 47 CFR Part 25

Satellite communications.

Federal Communications Commission.

Marlene H. Dortch,

Secretary.

Rule changes

For the reasons discussed in the preamble, the Federal Communications Commission amends 47 CFR part 25 as follows:

PART 25—SATELLITE COMMUNICATIONS

1. The authority citation for part 25 continues to read as follows:

Authority: 47 U.S.C. 701–744. Interprets or applies Sections 4, 301, 302, 303, 307, 309 and 332 of the Communications Act, as amended, 47 U.S.C. Sections 154, 301, 302, 303, 307, 309 and 332, unless otherwise noted.

§ 25.200 [Removed]

2. Section 25.200 is removed.

§ 25.213 [Removed and reserved]

3. Section 25.213 is amended by removing and reserving paragraph (b).

4. Add § 25.216 to read as follows:

§ 25.216 Limits on emissions from mobile earth stations for protection of aeronautical radionavigation-satellite service.

(a) The e.i.r.p. density of emissions from mobile earth stations placed in service on or before July 21, 2002 with assigned uplink frequencies between 1610 MHz and 1660.5 MHz shall not exceed −70 dBW/MHz, averaged over any 20 millisecond interval, in the band 1559–1587.42 MHz. The e.i.r.p. of discrete emissions of less than 700 Hz bandwidth generated by such stations shall not exceed −80 dBW, averaged over 20 milliseconds, in that band.

(b) The e.i.r.p. density of emissions from mobile earth stations placed in service on or before July 21, 2002 with assigned uplink frequencies between 1610 MHz and 1626.5 MHz shall not exceed −64 dBW/MHz, averaged over 20 milliseconds, in the 1587.42–1605 MHz band. The e.i.r.p. of discrete emissions of less than 700 Hz bandwidth generated by such stations shall not exceed −74 dBW, averaged over 20 milliseconds, in the 1587.42–1605 MHz band.

(c) The e.i.r.p. density of emissions from mobile earth stations placed in service after July 21, 2002 with assigned uplink frequencies between 1610 MHz and 1660.5 MHz shall not exceed −70 dBW/MHz, averaged over 20 milliseconds, in the 1559–1605 MHz band. The e.i.r.p. of discrete emissions of less than 700 Hz bandwidth from such stations shall not exceed −80 dBW, averaged over 20 milliseconds, in the 1559–1605 MHz band.

(d) As of January 1, 2005 and from then on, the e.i.r.p. density of emissions from mobile earth stations placed in service on or before July 21, 2002 with assigned uplink frequencies between 1610 MHz and 1660.5 MHz (except Standard A Inmarsat terminals used as Global Maritime Distress and Safety System ship earth stations) shall not exceed −70 dBW/MHz, averaged over 20 milliseconds, in the 1559–1605 MHz band or a level in the 1605–1610 MHz band determined by linear interpolation from −70 dBW/MHz at 1605 MHz to −10 dBW/MHz at 1610 MHz, and the e.i.r.p. of discrete emissions of less than 700 Hz bandwidth from such stations shall not exceed −80 dBW, averaged over 20 milliseconds, in the 1559–1605 MHz band.

(e) The e.i.r.p. density of emissions from mobile earth stations with assigned uplink frequencies between 1990 MHz and 2025 MHz shall not exceed −70 dBW/MHz, averaged over 20 milliseconds, in frequencies between 1559 MHz and 1610 MHz. The e.i.r.p. of discrete emissions of less than 700 Hz bandwidth from such stations shall not exceed −80 dBW, averaged over 20 milliseconds, in frequencies between 1559 MHz and 1605 MHz.

(f) Mobile earth stations placed in service after July 21, 2002 with assigned uplink frequencies in the 1610–1660.5 MHz band shall suppress the power density of emissions in the 1605–1610 MHz band to an extent determined by linear interpolation from −70 dBW/MHz at 1605 MHz to −10 dBW/MHz at 1610 MHz.

Note to § 25.216: Operation of mobile earth stations is also subject to all pertinent emissions limits specified in other sections of the Commission's rules. *See* §§ 25.202(f) and 25.213(a)(1).

[FR Doc. 02–24892 Filed 10–1–02; 8:45 am]

BILLING CODE 6712–01–P

FEDERAL COMMUNICATIONS COMMISSION

47 CFR Part 73

[MM Docket No. 00–39; FCC 02–253]

Conversion to Digital Television

AGENCY: Federal Communications Commission.

ACTION: Final rule; denial.

SUMMARY: This item denies a Petition for Reconsideration, filed by Diversified Broadcasting, Inc., of the *Memorandum Opinion and Order* in this proceeding, which addressed a number of issues related to the conversion of the nation's

broadcast television system from analog to digital television (''DTV''). This item affirms the decision made in the *Memorandum Opinion and Order* that certain NTSC applications filed prior to July 1, 1997, must be protected by later-filed DTV area expansion applications.

ADDRESSES: 445 12th Street SW., Washington, DC 20554.

FOR FURTHER INFORMATION CONTACT: Kim Matthews, Policy Division, Media Bureau, Federal Communications Commission, (202) 418–2120.

SUPPLEMENTARY INFORMATION: Diversified Broadcasting, Inc., licensee of WCJB(TV), Gainesville, Florida (''Diversified'') filed a Petition for Reconsideration of the *Memorandum Opinion and Order* (''*MO&O*'') in MM Docket No. 00–39, 66 FR 65122 (December 18, 2001), which addressed a number of issues related to the conversion of the nation's broadcast television system from analog to digital television (''DTV''). Specifically, Diversified objects to the determination in the *MO&O* that certain NTSC applications filed prior to July 1, 1997, must be protected by later-filed DTV area expansion applications. Community Television of Florida, Inc. (''CTF'') filed an Opposition to Diversified's Petition. For the reasons discussed below, the Commission denies Diversified's Petition.

The *Report and Order and Further Notice of Proposed Rule Making* (''*Report and Order*''), 66 FR 10001 (February 13, 2001), in this proceeding addressed the procedures to be used in processing mutually-exclusive applications filed by licensees seeking to expand or ''maximize'' their DTV allotments (referred to herein as ''expansion applications''). In the *Report and Order*, we gave processing and protection priority to then pending DTV expansion applications, filed on or prior to January 18, 2001, over previously filed NTSC applications except those NTSC applications that fell into one of three categories: post-auction applications, applications proposed for grant in pending settlements, and singleton applications cut off from further filings. We stated that these applications must have been accepted for filing in order to be protected from DTV expansion applications. When a pending DTV application conflicts with an NTSC application in one of these categories, we stated that we would treat the applications as mutually exclusive (''MX'') and follow the procedures adopted in the *Report and Order* for MX applications—that is, we required that parties resolve their MX conflict within 90 days or we would subsequently dismiss both applications.

In the *MO&O,* we revised the procedures for determining priority between conflicting DTV expansion applications and NTSC applications. We noted that in the *Broadcast Auctions Report and Order,* 63 FR 48615 (September 11, 1998), we had found that, by application of Section 309(l) of the Communications Act, pending NTSC application groups on file prior to July 1, 1997, are entitled to compete in an auction that does not include applications filed on or after July 1, 1997. Pursuant to that statutory directive, we concluded that we may not find DTV expansion applications (all of which were filed after June 30, 1997) to be MX with NTSC application groups on file prior to July 1, 1997. This also is the case when an NTSC application that was cut-off as part of a group of NTSC applications filed before July 1, 1997, has become a singleton because other applications in the group have been dismissed. We concluded in the *MO&O* that NTSC applications in these two categories—NTSC application groups on file prior to July 1, 1997, and any singletons remaining from such a group—should be protected against DTV expansion applications. DTV expansion applicants are permitted to file minor amendments to resolve conflicts with NTSC applications in these categories.

Diversified requests that we reconsider and reverse our decision that pending DTV expansion applications filed on or prior to January 18, 2001, must protect certain NTSC applications filed prior to July 1, 1997. Diversified argues that we should reinstate our initial decision (in the *Report and Order*) and treat these DTV expansion applications as MX with these NTSC applications so that the parties may work together to resolve interference issues. According to Diversified, under the determination in the *Report and Order,* its DTV expansion application for WCJB(TV) would have been MX with CTF's competing NTSC application for Marianna, Florida, and the parties then would have had 90 days within which to negotiate a resolution to the interference conflict. Under the revised decision in the *MO&O,* however, the NTSC application for Marianna will take priority, as it was filed prior to July 1, 1997, and was cut-off as part of a group of two competing NTSC applications filed before July 1, 1997. Diversified argues that this processing change puts DTV applicants at a severe disadvantage despite the importance of DTV to the future of television broadcasting. Diversified also argues that we incorrectly interpreted Section 309(l) of the Communications Act, which Diversified claims was intended to resolve exclusivity only among competing *analog* television applications. According to Diversified, that provision was not intended to address processing of subsequently filed DTV expansion applications, and Congress did not intend that DTV expansion applications be treated as secondary to analog station applications. In its Opposition, CTF argues that Diversified's application must be dismissed as a result of the Commission's decision in the *MO&O* according priority to NTSC applications filed prior to July 1, 1997.

We decline to revise our determination that Section 309(l) of the Communications Act entitles pending NTSC application groups on file prior to July 1, 1997, to compete in an auction that does not include applications filed on or after July 1, 1997. Section 309(l) provides:

> With respect to competing applications for initial licenses or construction permits for commercial radio or television stations that were filed with the Commission before July 1, 1997, the Commission shall—
>
> (2) treat the persons filing such applications as the only persons eligible to be qualified bidders for purposes of such proceeding* * *

Statutory construction must begin with the language employed by the statute and the assumption that the ordinary meaning of the language accurately expresses the legislative purpose. The language of Section 309(l)(2) is unambiguous that, where competing applications were filed with the Commission before July 1, 1997, ''the Commission shall * * * treat the persons filing such applications as the only persons eligible to be qualified bidders.'' The Conference Report confirms that ''[t]he Commission shall limit the class of eligible applicants who may be considered qualified bidders * * * to the persons who filed applications with the Commission before that date [July 1, 1997].''

In implementing section 309(l) the Commission determined, first, that it would resolve by competitive bidding any mutually exclusive application group not resolved by a settlement agreement and, second, that pending NTSC applications submitted for filing by September 20, 1996 constituted pre-July 1st competing applications within the meaning of section 309(l) even if the related freeze area waiver had not been processed. Except for the circumstance in which only one application (and waiver request) was ever submitted for a particular allotment, the Commission determined that it was precluded by the

unambiguous language of subsection (2) from soliciting additional potentially mutually exclusive applications, despite its earlier explicit pledge to provide the opportunity for the filing of competing applications with respect to any analog television application accepted for filing. This interpretation was upheld in *Orion Communications, Ltd* v. *FCC,* 221 F.3d 196 (D.C. Cir. 2000) (Table).

Consistent with the determination to resolve competing NTSC applications by competitive bidding and the resulting obligation to insulate such applicants from having to compete for the construction permit against post-June 30, 1997 applicants, the Commission may not require NTSC applications within the scope of section 309(l) to resolve any interference conflicts with pending DTV expansion applicants or face dismissal or otherwise direct that the rights of this category of broadcast applicants are secondary to those of DTV expansion applicants. To do so would vitiate completely the special protections Congress expressly extended to ''[c]ompeting applications * * * for commercial radio or television stations filed with the Commission before July 1, 1997.'' Congress, although clearly aware in 1997 of the impending transition to DTV, did not offer any guidance either in the statutory language or in the Conference Report as to how the Commission is to accommodate the competing spectrum needs of this group of applicants and of DTV expansion applicants. Even without such express guidance, however, the Commission must devise a solution faithfully effectuating the express protections afforded this category of competing commercial broadcast applications. Notwithstanding Diversified's contention, the Commission's original procedure, requiring the dismissal of certain NTSC applicants within the scope of section 309(l), contravened Congress's manifest intent regarding these particular applicants. Its repeal in the *MO&O* was therefore compelled by the unambiguous language of section 309(l).

Diversified has advanced no argument that leads us to a different conclusion. Diversified claims that Section 309(l) was intended to resolve mutual exclusivity among analog television applications only, and that it was not intended to determine priority among competing analog and DTV expansion applications. Nothing in the statutory text suggests that DTV expansion applications were intended to be treated differently under Section 309(l), or that they were intended to be treated as MX with applications filed prior to July 1, 1997. Elsewhere in the statute Congress did expressly provide for different treatment of digital stations when, for example, in Section 309(j)(2), it expressly excluded certain digital stations from our competitive bidding authority. Congress made no provision for disparate treatment of DTV expansion applications under Section 309(l), however, and the unambiguous language of that provision compels the result we reached in the *MO&O.*

The Petition for Reconsideration filed January 17, 2002, by Diversified Broadcasting, Inc. *is denied.*

List of Subjects in 47 CFR Part 73

Television broadcasting.

Federal Communications Commission.

Marlene H. Dortch,

Secretary.

[FR Doc. 02–25071 Filed 10–1–02; 8:45 am]

BILLING CODE 6712–01–P

DEPARTMENT OF TRANSPORTATION

Federal Motor Carrier Safety Administration

49 CFR Parts 350, 360, 365, 372, 382, 383, 386, 387, 388, 390, 391, and 393

Motor Carrier Safety Regulations; Technical Amendments

AGENCY: Federal Motor Carrier Safety Administration (FMCSA), DOT.

ACTION: Final rule.

SUMMARY: The FMCSA is amending the Federal Motor Carrier Safety Regulations (FMCSRs) to update obsolete references and make certain grammatical corrections for clarity. In addition, we are correcting an error in the final rule on Brake Performance Requirements for Commercial Motor Vehicles published on August 9, 2002 in the **Federal Register**. FMCSA is not making any substantive changes to its regulations by these technical amendments.

EFFECTIVE DATE: This final rule is effective October 2, 2002.

ADDRESSES: Ms. Janet Nunn, Office of Policy Plans and Regulation (MC–PRR), 202–366–2797, U.S. Department of Transportation, Federal Motor Carrier Safety Administration, 400 Seventh Street, SW., Washington, DC 20590. Office hours are from 7:30 a.m. to 5 p.m., e.t., Monday through Friday, except Federal holidays.

FOR FURTHER INFORMATION CONTACT: Janet Nunn, (202) 366–2797.

SUPPLEMENTARY INFORMATION:

Electronic Access

An electronic copy of this document may be downloaded by using a computer, modem and suitable communications software from the Government Printing Office's Electronic Bulletin Board Service at 202–512–1661. Internet users may also reach the Office of the Federal Register Web site: *http://www.archives.gov/federal_register*; and Government Printing Office Web page: *http://www.access.gpo.gov.*

Summary of Changes

Title 49 of the Code of Federal Regulations (CFR), chapter III, subchapter B, contains the Federal Motor Carrier Safety Regulations (FMCSRs) for truck and bus safety. This final rule corrects inaccurate references, citations, and technical errors resulting from statutory changes in laws governing interstate commerce. It also makes other editorial revisions for clarity.

In the § 360.3(f) table, a filing fee has been added for applications involving the merger, transfer, or lease of operating rights of motor passenger and property carriers, property brokers, and household goods freight forwarders under 49 U.S.C. 10321 and 10926. The ICC Termination Act of 1995 (ICCTA) sunsetted the Interstate Commerce Commission (ICC) and transferred the ICC's registration and insurance functions to the Secretary of Transportation, who delegated these functions to the Federal Highway Administration (FHWA) in 1996 and redelegated them to FMCSA in 2000. Filing fees related to these functions were initially assessed under ICC regulations codified in 49 CFR part 1002. In February 1999, FHWA adopted its own filing fee and fee collection regulations in a new part 360 (64 FR 7134, February 12, 1999). The preamble to this rule stated that ''(i)n this rulemaking proceeding the FHWA is adopting the ICC's fee regulations related to the recently transferred motor carrier functions without any substantive changes.'' However, the rule inadvertently omitted the fee for transfers of operating authority codified at 49 CFR 1002.2(f)(25). Both FHWA and FMCSA have assessed this fee since 1996. Therefore, restoring the transfer fee to the fee table will impose no new burdens on the public.

We are also amending part 360 by revising § 360.3(g)(2) to clarify that a credit card may be required in situations involving dishonored checks.

In part 365, references to water carriers have been removed because the

ICCTA did not transfer to the Secretary authority to register water carriers. The ICCTA also required the Secretary to register all freight forwarders, not just household goods freight forwarders. We have changed part 365 to reflect that fact. We have also changed § 365.105(b) to add a reference to FMCSA's do-it-yourself Web site as a means of obtaining OP–1 application forms.

In § 387.39, we have modified two motor carrier financial responsibility forms to correct numerous obsolete references. These forms have been approved by the Office of Management and Budget under control number 2126–0008. Their current expiration date is June 30, 2003.

In § 390.27, the Virgin Islands has been included in the table. In addition, two new notes have been added to direct Canadian and Mexican carriers where to obtain information.

In § 391.41(a), a footnote has been added acknowledging a reciprocity agreement between the United States and Canada that provides for a valid Canadian commercial driver's license issued by a Canadian Province or Territory to be proof of medical fitness to drive commercial motor vehicles (CMVs) in the United States, except in certain limited circumstances.

Finally, a correction has been made to a final rule published on August 9, 2002 (67 FR 51770), pertaining to brake performance requirements for CMVs.

Administrative Procedure Act

This final rule was issued without using the notice and comment procedures contained at 5 U.S.C. 553(b), because these technical amendments merely correct and clarify existing regulations. They do not impose any new requirements on the regulated industry and are not substantive changes. For the same reasons, good cause exists under 5 U.S.C. 553(d) to dispense with the 30-day delay in the effective date requirement and the FMCSA is making the rule effective upon publication in the **Federal Register**.

Executive Order 12866 (Regulatory Planning and Review) and DOT Regulatory Policies and Procedures

The FMCSA has determined that this action is not a significant regulatory action under Executive Order 12866 or within the meaning of Department of Transportation regulatory policies and procedures. Therefore, this document was not reviewed by the Office of Management and Budget.

Regulatory Flexibility Act (5 U.S.C. 601–612)

These technical amendments will not have an economically significant effect on a substantial number of small entities (*i.e.*, motor carriers), and therefore an economic analysis of this rule is not required.

Unfunded Mandates Reform Act of 1995 (2 U.S.C. 1531 *et seq.*)

This rule does not impose a Federal mandate resulting in increased expenditures either by State, local, and tribal governments, in the aggregate, or by the private sector, of $100 million or more (as adjusted for inflation) in any one year; nor does it significantly or uniquely affect small governments.

Executive Order 12988 (Civil Justice Reform)

This action meets applicable standards in section 3 of Executive Order 12988 to minimize litigation, eliminate ambiguity, and reduce burden.

Executive Order 13045 (Protection of Children From Environmental Health Risks and Safety Risks)

This rule is not an economically significant rule and does not concern an environmental risk to health or safety that may disproportionately affect children under Executive Order 13045.

Executive Order 12630 (Taking of Private Property)

This rule will not effect a taking of private property or otherwise have taking implications as specified in Executive Order 12630, governmental Actions and Interference with Constitutionally Protected Property Rights.

Executive Order 13132 (Federalism)

This final rule will not have federalism implications, as defined in Executive Order 13132, to warrant the preparation of a Federalism Assessment. It does not have substantial direct effects on the States, on the relationship between the national government and the States, or on the distribution of power and responsibilities among the various levels of governments. Nothing in this document directly preempts any State law or regulations.

Executive Order 12372 (Intergovernmental Review)

Catalog of Federal Domestic Assistance Program Number 20.217, Motor Carrier Safety. The regulations implementing Executive Order 12372 regarding intergovernmental consultation of Federal program and activities do not apply to this action.

Paperwork Reduction Act of 1995 (44 U.S.C. chapter 35)

This final rule does not contain any information collections that are subject to review by the Office of Management and Budget under the Paperwork Reduction Act.

National Environmental Policy Act

The FMCSA has analyzed this action for the purpose of the National Environmental Policy Act of 1969 (42 U.S.C. 4321 *et seq.*) and has determined that this action does not have any effect on the quality of the environment.

Small Business Regulatory Enforcement Fairness Act

This final rule is exempt from congressional review under 5 U.S.C. 801, because these amendments merely update obsolete references and make minor editorial corrections to existing regulations where applicable.

List of Subjects

49 CFR Part 350

Grant programs—transportation, Highway safety, Motor carriers, Motor vehicle safety, Reporting and recordkeeping requirements.

49 CFR Part 360

Administrative practice and procedure, Insurance, Motor carriers.

49 CFR Part 365

Administrative practice and procedure, Brokers, Buses, Freight forwarders, Motor carriers, Moving of household goods.

49 CFR Part 372

Agricultural commodities, buses, Cooperatives, Freight forwarders, Motor carriers, Moving of household goods, Seafood.

49 CFR Part 382

Alcohol abuse, Drug abuse, Drug testing, Highway safety, Motor carriers, Penalties, Safety, Transportation.

49 CFR Part 383

Administrative practice and procedure, Alcohol abuse, Drug abuse, Highway safety, Motor carriers.

49 CFR Part 386

Administrative practice and procedure, Hazardous materials transportation, Highway safety, Motor carriers, Motor vehicle safety, Penalties.

49 CFR Part 387

Buses, Freight, Freight forwarders, Hazardous materials transportation,

Highway safety, Insurance, Intergovernmental relations, Motor carriers, Motor vehicle safety, Moving of household goods, Penalties, Reporting and recordkeeping requirements, Surety bonds.

49 CFR Part 388

Highway safety, Intergovernmental relations, Motor carriers, Motor vehicle safety.

49 CFR Part 390

Highway safety, Intermodal transportation, Motor carriers, Motor vehicle safety, Reporting and recordkeeping requirements.

49 CFR Part 391

Alcohol abuse, Drug abuse, Highway safety, Motor carriers, Reporting and recordkeeping requirements, Safety, Transportation.

49 CFR Part 393

Highway safety, Motor carriers, Motor vehicle safety.

The Amendments

For the reasons set forth in the preamble, FMCSA amends Title 49 of the Code of Federal Regulations, chapter III, subchapter B, as set forth below.

PART 350—COMMERCIAL MOTOR CARRIER SAFETY ASSISTANCE PROGRAM

1. Revise the authority citation for part 350 to read as follows:

Authority: 49 U.S.C. 13902, 31100–31104, 31108, 31136, 31140–31141, 31161, 31310–31311, 31502; and 49 CFR 1.73.

§ 350.201 [Amended]

2. Amend § 350.201 as follows:

a. Amend paragraph (m) by removing ''title'' and add, in its place, ''title 23'';

b. Amend paragraph (t)(1) by removing ''parts 356 and'' and add, in its place, ''part''.

§ 350.211 [Amended]

3. Amend § 350.211 by revising the phrase ''Ensure that'' in paragraph (15) to read ''the State will ensure that''.

§ 350.213 [Amended]

4. Amend § 350.213(b) introductory text by revising the last sentence to read as follows:

§ 350.213 What must a State CVSP include?

* * * * *

(b) * * * The narrative section must include a description of how the State supports the activities identified in § 350.201(1) and (t).''

* * * * *

PART 360—FEES FOR MOTOR CARRIER REGISTRATION AND INSURANCE

5. The authority citation for part 360 continues to read as follows:

Authority: 31 U.S.C. 9701, 49 U.S.C. 13908(c) and 14504(c)(2); and 49 CFR 1.73.

§ 360.3 [Amended]

6. Amend § 360.3 as follows:

a. Amend § 360.3(a)(2) by inserting '', Insurance Compliance Division'' before ''(MC–ECI)'';

b. Amend paragraph (a)(2)(iii) introductory text by removing ''Office of Data Analysis and Information Systems, Licensing and Insurance Division'' and add, in its place, ''Office of Enforcement and Compliance, Insurance Division (MC–ECI)'';

c. Amend § 360.3(f) by adding new paragraph (8) under Part I of the table to read as follows:

§ 360.3 Filing fees.

* * * * *

(f) Schedule of filing fees.

* * * * *

Type of proceeding		Fee
Part I: Licensing:		
* *	* * * * *	
(8)	An application involving the merger, transfer, or lease of the operating rights of motor passenger and property carriers, property brokers, and household goods freight forwarders under 49 U.S.C. 10321 and 10926.	300

d. Amend § 360.3(g)(2) by revising the phrase ''or a money order'' to read '', money order, or credit card''.

PART 365—RULES GOVERNING APPLICATIONS FOR OPERATING AUTHORITY

7. The authority citation for part 365 continues to read as follows:

Authority: 5 U.S.C. 553 and 559; 16 U.S.C. 1456; 49 U.S.C. 13101, 13301, 13901–13906, 14708, 31138, and 31144; and 49 CFR 1.73.

§ 365.101 [Amended]

8. Amend § 365.101 as follows:

a. Amend § 365.101(b) by removing the words ''household goods.''

b. Amend § 365.101 by removing and reserving paragraph (c).

c. Amend § 365.101(g) by removing the words ''and water.''

§ 365.105 [Amended]

9. Amend § 365.105 as follows:

a. Amend § 365.105(a) by removing ''of household goods'' immediately following ''Form OP–1(FF) for freight forwarders'';

b. Revise § 365.105(b) to read as follows:

§ 365.105 Starting the application process; Form OP–1.

* * * * *

(b) Obtain forms at a FMCSA Division Office in each State or at one of the FMCSA Service Centers. Addresses and phone numbers for the Division Offices and Service Centers can be found at: *http://www.fmcsa.dot.gov/aboutus/fieldoffices.* The forms and information about filing procedures can be downloaded at: *http://www.fmcsa.dot.gov/factsfigs/formspubs;* and from the do-it-yourself website at: *http://www.diy.dot.gov.*

§ 365.107 [Amended]

10. Amend § 365.107 as follows:

a. Amend paragraph (e) introductory text by removing ''household goods'' before ''freight forwarder''; and by removing '', water contract carrier'';

b. Remove paragraph (f) of § 365.107;

c. Redesignate paragraph (g) as paragraph (f);

d. Amend newly designated paragraph (f) by removing ''and water.''

e. Redesignate the note at the end of § 365.107 as paragraph (g).

f. Amend newly designated paragraph (g) by inserting ''and'' after ''Form OP–1 MX for Mexican property carriers''; removing '', and Form OP–(W) for water carriers''; and removing the last sentence.

§ 365.109 [Amended]

11. Amend § 365.109(a)(7) by removing ''on file with the FMCSA and.''

§ 365.401 [Amended]

12. Amend § 365.401 as follows:

a. Remove ''water carriers,'';

b. Remove ''Interstate Commerce Commission'' and add, in its place, ''FMCSA'';

c. Remove ''1002.2(f)(25)'' and add, in its place, ''360.3(f)(8).''

§ 365.403 [Amended]

13. Amend § 365.403 as follows:

a. Amend § 365.403(b)(1) by removing ''and water'';

b. Amend § 365.403(b)(2) by removing ''household goods.''

§ 365.405 [Amended]

14. Amend § 365.405 as follows:

a. Revise § 365.405(a)(1) to read as follows:

§ 365.405 Applications.

(a) *Procedural requirements.* (1) At least 10 days before consummation, an original and two copies of a properly completed Form OP–FC–1 and any attachments (*see* paragraph (b)(1)(viii) of this section) must be filed with the Federal Motor Carrier Safety Administration, Licensing Division (MC–RIS), 400 Seventh Street, SW., Room 8214, Washington, DC 20590.

* * * * *

b. Amend § 365.405(a)(2) by removing the words ''tarriffs (if applicable),''; by removing ''1312''; and by removing the sentence ''In addition, contract carriers must comply with the FMCSA's regulations concerning contracts at 49 CFR part 1053.'';

c. Amend § 365.405(b)(1)(ii) by removing ''that portion of''.

§ 365.411 [Amended]

15. Amend § 365.411(b) by removing ''Office of the Secretary, Case Control Branch, Interstate Commerce Commission, Washington, DC 20423'' and add, in its place, 'FMCSA Licensing Division (MC–RIS), 400 Seventh Street, SW., Room 8214, Washington, DC 20590' ''

§ 365.413 [Amended]

16. Revise the heading of § 365.413 as set forth below:

§ 365.413 Procedures for changing the name or business form of a motor carrier, freight forwarder, or property broker.

PART 372—EXEMPTIONS, COMMERCIAL ZONES, AND TERMINAL AREAS

17. The authority citation for part 372 continues to read as follows:

Authority: 49 U.S.C. 13504 and 13506; and 49 CFR 1.73.

§ 372.303 [Amended]

18. Amend § 372. 303 by revising the heading as set forth below:

§ 372.303 Terminal areas of motor carriers and freight forwarders at unincorporated communities served.

PART 377—PAYMENT OF TRANSPORTATION CHARGES

19. The authority citation for part 377 continues to read as follows:

Authority: 49 U.S.C. 13101, 13301, 13701, 13702, 13706, 13707; and 14101; and 49 CFR 1.73

§ 377.215 [Amended]

20. Amend § 377.215 by removing from the heading of paragraph (c) the word ''House'' and add, in its place, ''*Household*''

PART 382—CONTROLLED SUBSTANCES AND ALCOHOL USE AND TESTING

21. The authority citation for part 382 continues to read as follows:

Authority: 49 U.S.C. 31133, 31136, 31301 *et seq.,* 31502; and 49 CFR 1.73.

§ 382.305 [Amended]

22. Amend § 382.305(i)(3) by removing the word ''testing'' immediately after the words ''shall be'' and adding, in its place, ''tested.''

§ 382.401 [Amended]

22a. Amend § 382.401(d) by removing the word ''employee's'' and adding in its place ''employer's''

PART 383—COMMERCIAL DRIVER'S LICENSE STANDARDS; REQUIREMENTS AND PENALTIES

23. Revise the authority citation for part 383 to read as follows:

Authority: 49 U.S.C. 521, 31136, 31301 *et seq.,* 31502; Sec. 214 of Pub. L. 106–159, 113 Stat. 1766; and 49 CFR 1.73.

§ 383.3 [AMENDED]

24. Amend § 383.3(f)(3)(i)(A) by removing ''383.21(b))'' and add, in its place, ''383.21''.

PART 386—RULES OF PRACTICE FOR MOTOR CARRIER, BROKER, FREIGHT FORWARDER, AND HAZARDOUS MATERIALS PROCEEDINGS

25. The authority catation for part 386 continues to read as follows:

Authority: 49 U.S.C. 113, chapters 5, 51, 59, 131–141, 145–149, 311, 313, and 315; sec. 206, Pub. L. 106–159, 113 Stat. 1763; and 49 CFR 1.45 and 1.73.

§ 386.2 [Amended]

26. Amend § 386.2 in the definition of *Civil forfeiture proceedings* by removing ''FMCSA'' and adding, in its place, ''ICC''.

§ 386.22 [Amended]

27. Amend § 386.22 by removing in the first sentence ''has filed an election not to contest under § 386.15(a), or''.

§ 386.71 [Amended]

28. Amend § 386.71 by removing ''13502'' and add, in its place, ''31502''.

§ 386.82 [Amended]

29. Amend § 386.82(a)(4) by removing ''386.72(b)(3)'' and add, in its place, ''386.72(b)(1)''

Appendix B to Part 386 [Amended]

30. Amend paragraph (f) of appendix B to part 386 by removing ''$27,500'' and by adding, in its place ''$10,000''.

PART 387—MINIMUM LEVELS OF FINANCIAL RESPONSIBILITY FOR MOTOR CARRIERS

31. The authority citation for part 387 continues to read as follows:

Authority: 49 U.S.C. 13101, 13301, 13906, 14701, 31138, and 31139; and 49 CFR 1.73.

§ 387.9 [Amended]

32. In § 387.9, amend the table under the heading ''Schedule of Limits—Public Liability,'' column 1, in paragraphs (1) through (3), by removing ''10,000'' and add, in its place, ''10,001''.

§ 387.39 [Amended]

33. In § 387.39, revise the form titled ''Endorsement For Motor Carrier Policies of Insurance for Public Liability Under Section 18 of the Bus Regulatory Reform Act of 1982'' to read as follows:

U.S. Department of Transportation
Federal Motor Carrier Safety Administration

ENDORSEMENT FOR
MOTOR CARRIER POLICIES OF INSURANCE FOR PUBLIC LIABILITY
UNDER SECTION 18 OF THE BUS REGULATORY REFORM ACT OF 1982

Form Approved:
OMB No.: 2126-0008

Issued to _____ of _____
Dated at _____ this _____ day of _____, 20 _____
Amending Policy No. _____ Effective Date _____
Name of Insurance Company _____

Countersigned by _____
Authorized Company Representative

The policy to which this endorsement is attached provides primary or excess insurance, as indicated by "[X]," for the limits shown:

[ ] This insurance is primary and the company shall not be liable for amounts in excess of $_____ for each accident.

[ ] This insurance is excess and the company shall not be liable for amounts in excess of $_____ for each accident in excess of the underlying limit of $_____ for each accident.
Whenever required by the Federal Motor Carrier Safety Administration (FMCSA), the company agrees to furnish the FMCSA a duplicate of said policy and all its endorsements. The company also agrees, upon telephone request by an authorized representative of the FMCSA , to verify that the policy is in force as of a particular date. The telephone number to call is: _____ .

Cancellation of this endorsement may be effected by the company of the insured by giving (1) thirty-five (35) days notice in writing to the other party (said 35 days notice to commence from the date the notice is mailed, proof of mailing shall be sufficient proof of notice), and (2) if the insured is subject to the FMCSA's registration requirements, by providing thirty (30) days notice to the FMCSA (said 30 days notice to commence from the date the notice is received by the FMCSA at its office in Washington, D.C.).

DEFINITIONS AS USED IN THIS ENDORSEMENT

Accident includes continuous or repeated exposure to conditions which result in Public Liability which the insured neither expected nor intended.
Bodily Injury means injury to the body, sickness, or disease to any person, including death resulting from any of these.
Motor Carrier means a for-hire carrier of passengers by motor vehicle.
Property Damage means damage to or loss of use of tangible property
Public Liability *means liability for bodily injury or property damage.*

The insurance policy to which this endorsement is attached provides automobile liability insurance and is amended to assure compliance by the insured, within the limits stated herein, as a for-hire motor carrier of passengers with Section 18 of the Bus Regulatory Reform Act of 1982 and the rules and regulations of the Federal Motor Carrier Safety Administration.

In consideration of the premium stated in the policy to which this endorsement is attached, the insurer (the company) agrees to pay, within the limits of liability described herein, any final judgment received against the insured for public liability resulting from negligence in the operation, maintenance or use of motor vehicles subject to financial responsibility requirements of Section 18 of the Bus Regulatory Reform Act of 1982 regardless of whether or not each motor vehicle is specifically described in the policy and whether or not such negligence occurs on any route or in any territory authorized to be served by the insured or elsewhere. Such insurance as is afforded, for public liability, does not apply to injury to or death of the insured's employees while engaged in the course of their employment, or property transported by the insured, designated as cargo. It is understood and agreed that no condition, provision, stipulation, or limitation contained in the policy, this endorsement, or any other endorsement thereon, or violation thereof, shall relieve the company from liability or from the payment of any final judgment, within the limits of liability herein described, irrespective of the financial condition, insolvency or bankruptcy of the insured.

However, all terms, conditions, and limitations in the policy to which the endorsement is attached shall remain in full force and effect as binding between the insured and the company. The insured agrees to reimburse the company for any payment made by the company on account of any accident, claim, or suit involving a breach of the terms of the policy, and for any payment that the company would not have been obligated to make under the provisions of the policy except for the agreement contained in this endorsement.

It is further understood and agreed that, upon failure of the company to pay any final judgment recovered again the insured as provided herein, the judgment creditor may maintain an action in any court of competent jurisdiction against the company to compel such payment.

The limits of the company's liability for the amounts prescribed in this endorsement apply separately to each accident and any payment under the policy because of any one accident shall not operate to reduce the liability of the company for the payment of final judgments resulting from any other accident.

The Bus Regulatory Reform Act of 1982 requires limits of financial responsibility according to vehicle seating capacity, it is the MOTOR CARRIER'S obligation to obtain the required limits of financial responsibility. THE SCHEDULE OF LIMITS SHOWN ON THE REVERSE SIDE DOES NOT PROVIDE COVERAGE. The limits shown in the schedule are for information purposes only.

SCHEDULE OF LIMITS

PUBLIC LIABILITY
For-hire motor carriers of passengers operating in interstate or foreign commerce

Vehicle Seating Capacity	Effective Dates	
	Nov. 19, 1983	Nov. 19, 1985
(1) Any vehicle with a seating capacity of 16 passengers or more.	$2,500,000	$5,000,000
(2) Any vehicle with a seating capacity of 15 passengers or less.	$ 750,000	$1,500,000

Form MCS-90B
(6/2003)

34. In § 387.39, revise the form titled "Motor Carrier Public Liability Surety Bond Under Section 18 of the Bus Regulatory Reform Act of 1982" to read as follows:

U.S. Department
of Transportation
Federal Motor Carrier
Safety Administration

Form Approved:
OMB No.: 2126-0008

MOTOR CARRIER PUBLIC LIABILITY SURETY BOND
UNDER SECTION 18 OF THE BUS REGULATORY REFORM ACT OF 1982

PARTIES

Surety Company and Principal Place of Business Address	Motor Carrier Principal, FMCSA Docket No., and Principal Place of Business Address
_____	_____
_____	_____
_____	_____
_____	_____

PURPOSE This is an agreement between the Surety and the Principal under which the Surety, its successors and assignees, agree to be responsible for the payment of any final judgment or judgments against the Principal for public liability and property damage claims in the sums prescribed herein, subject to the governing provisions and folloding conditions.

GOVERNING PROVISIONS (1) Section 18 of the Bus Regulatory Reform Act of 1982
(2) Rules and regulations of the Federal Motor Carrier Safety Administration (FMCSA)

CONDITIONS The Principal is or intends to become a motor carrier of passengers subject to the applicable governing provisions relating to financial responsibility for the protection of the public.

This bond assures ensures compliance by the Principal with the applicable governing provisions, and shall inure to the benefit of any person or persons who shall recover a final judgment or judgments against the Principal for public liability or property damage claims (excluding injury to or death of the Principal's employees while engaged in the course of their employment, and loss of or damage to property of the Principal, and the cargo transported by the Principal). If every final judgment shall be paid for such claims resulting from the negligent operation, maintenance, or use of motor vehicles in transportation subject to the applicable governing provisions, then this obligation shall be void, otherwise it will remain in full effect.

Within the limits described herein, the Surety extends to such losses regardless of whether such motor vehicles are specifically described herein and whether occurring on the route or in the territory authorized to be served by the Principal or elsewhere.

The liability of the Surety for each motor vehicle subject to the applicable governing provisions for each accident shall not exceed $_____, and shall be a continuing one notwithstanding any recovery thereunder.

The surety agrees, upon telephone request by an authorized representative of the FMCSA, to verify that the surety bond is in force as of a particular date. The telephone number to call is _____.

This bond is effective from _____ (12:01 a.m., standard time, at the address of the Principal as stated herein) and shall continue in force until terminated as described herein. The Principal or the Surety may at any time terminate this bond by giving (1) thirty-five (35) days notice in writing to the other party (said 35 days notice to commence from the date the notice is mailed, proof of mailing shall be sufficient proof of notice), and (2) if the Principal is subject to the FMCSA's registration requirements, by providing thirty (30) days notice to the FMCSA (said 30 days notice to commence from the date notice is received by the FMCSA at its office in Washington, D.C.). The Surety shall not be liable for the payment of any judgment or judgments against the Principal for public liability or property damage claims resulting from accidents which occur after the termination of this bond as described herein, but such termination shall not affect the liability of the Surety from the payment of any such judgment or judgments resulting from accidents which occur during the time the bond is in effect.

_____
Date

(AFFIX CORPORATE SEAL)

_____
Surety

_____ _____
City *State*

By _____

ACKNOWLEDGMENT OF SURETY

STATE OF _____ COUNTY OF _____

On this _____ day of _____, 20___, before me personally came _____, who, being by me duly sworn, did depose and say that he resides in _____; that he/she is_____ of the _____, the corporation described in and which executed the foregoing instrument; that he knows the seal of said corporation; that the seal affixed to said instrument is such corporate seal; that it was so affixed by order of the board of directors of said corporation; that he signed his name thereto by like order, and he duly acknowledged to me that he executed the same for and on behalf of said corporation.

_____

_____
Title of official administering oath

(OFFICIAL SEAL)

Surety Company File No. _____
Form MCS-82B
(6/2003)

§ 387.303 [Amended]

35. Amend § 387.303, paragraph (b)(2) table, column 1, in paragraphs (a) through (c), by removing ''10,000'' and add, in its place, ''10,001''.

PART 388—COOPERATIVE AGREEMENTS WITH STATES

36. The authority citation for part 388 continues to read as follows:

Authority: 49 U.S.C. 113 and 502; 49 CFR 1.73.

37. In part 388, remove ''Regional Director of Motor Carriers'' wherever it appears and add, in its place, ''Field Administrator''.

PART 390—FEDERAL MOTOR CARRIER SAFETY REGULATIONS; GENERAL

38. The authority citation for part 390 continues to read as follows:

Authority: 49 U.S.C. 13301, 13902, 31132–31133, 31136, 31502, 31504; sec. 204, Pub. L. 104–88, 109 Stat. 803, 941 (49 U.S.C. 701 note); sec. 217, Pub. L. 105–159, 113 Stat. 1748, 1767; and 49 CFR 1.73.

§ 390.27 [Amended]

39. In § 390.27:

a. Amend the table, in the middle column, under the heading **Territory included**, in the territory covered by the Eastern Service Center, by inserting ''Virgin Islands,'' before **WV**;

b. Amend § 390.27 by adding notes 1 and 2 at the end of the table to read as follows:

§ 390.27 Locations of motor carrier safety service centers.

* * * * *

Note 1: Canadian carriers, for information regarding proper service center, contact a FMCSA division (State office in AK, ME, MI, MT, NY, ND, VT, or WA.

Note 2: Mexican carriers, for information regarding proper service center, contact a FMCSA division (State) office in AZ, CA, NM, or TX.

PART 391—QUALIFICATIONS OF DRIVERS

40. The authority citation for part 391 continues to read as follows:

Authority: 49 U.S.C. 322, 504, 31133, 31136, and 31502; and 49 CFR 1.73.

§ 391.41 [Amended]

41. Amend § 391.41(a) by adding a footnote at the end to read as follows:

§ 391.41 Physical qualifications for drivers.

(a) * * *

* * * * *

The United States and Canada entered into a Reciprocity Agreement, effective March 30, 1999, recognizing that a Canadian commercial driver's license is proof of medical fitness to drive. Therefore, Canadian commercial motor vehicle (CMV) drivers are no longer required to have in their possession a medical examiner's certificate if the driver has been issued, and possesses, a valid commercial driver's license issued by a Canadian Province or Territory. However, Canadian drivers who are insulin-using diabetics, who have epilepsy, or who are hearing impaired as defined in § 391.41(b)(11) are not qualified to drive CMVs in the United States. Furthermore, Canadian drivers who do not meet the medical fitness provisions of the Canadian National Safety Code for Motor Carriers but who have been issued a waiver by one of the Canadian Provinces or Territories are not qualified to drive CMVs in the United States.

§ 391.49 [Amended]

42. Amend § 391.49(a) by removing ''State Director'' and adding, in its place, ''Division Administrator''.

§ 391.65 [Amended]

43. Amend § 391.65(a)(2)(vii), in the certificate, under (Signature of Driver), by removing ''391.3(c)'' and adding, in its place, ''390.5''.

PART 393—PARTS AND ACCESSORIES NECESSARY FOR SAFE OPERATION

44. The authority citation for part 393 continues to read as follows:

Authority: 49 U.S.C. 1041(b) of Pub. L. 102–240, 105 Stat. 1914, 49 U.S.C. 31136, and 31502; and 49 CFR 1.73.

§ 393.48 [Amended]

45. Amend § 393.48(c)(2) by removing the authority citation following paragraph (c)(2).

§ 393.52 [Amended]

46. Remove ''53.5'' and add, in its place, ''43.5'' in § 393.52(d)—Vehicle brake performance table, in second column, under heading ''Braking force as a percentage of gross vehicle or combination weight.''

§ 393.86 [Amended]

47. Amend § 393.86(b)(3), in the heading, by removing ''*(g)*'' and adding, in its place, ''*(b)*''.

Issued on: September 25, 2002.

Allan M. Fisher,

Associate Administrator for Administration and Chief Financial Officer.

[FR Doc. 02–24728 Filed 9–27–02; 3:15 pm]

BILLING CODE 4910–EX–M

DEPARTMENT OF COMMERCE

National Oceanic and Atmospheric Administration

50 CFR Parts 600 and 660

[Docket No. 020904208 2208–01; I.D. 082702B]

RIN 0648–AP85

Magnuson-Stevens Act Provisions; Fisheries Off West Coast States and in the Western Pacific; Pacific Coast Groundfish Fishery; Groundfish Fishery Management Measures; Corrections

AGENCY: National Marine Fisheries Service (NMFS), National Oceanic and Atmospheric Administration (NOAA), Commerce.

ACTION: Correction to emergency rule latitude/longitude coordinates for the Darkblotched Rockfish Conservation Area (DBCA) in the Pacific Coast groundfish fishery.

SUMMARY: This document contains corrections to DBCA latitude/longitude coordinates implemented by emergency rulemaking in the Pacific Coast groundfish fishery and published on September 13, 2002.

DATES: Effective September 10, 2002, through March 12, 2003.

FOR FURTHER INFORMATION CONTACT: Carrie Nordeen (Northwest Region, NMFS); phone: 206–526–6140; fax: 206–526–6736; e-mail: carrie.nordeen@noaa.gov,.

SUPPLEMENTARY INFORMATION: An emergency rule was recommended by the Pacific Fishery Management Council (Pacific Council) in consultation with Pacific Coast Treaty Tribes and the States of Washington, Oregon, and California at its June 17 - 21, 2002, meeting in Foster City, California. This emergency rule established the DBCA to protect darkblotched rockfish, an overfished species, while allowing limited entry trawl harvest of healthy groundfish stocks outside of the DBCA. The specifications and management measures for the current fishing year (January 1 - December 31, 2002) were initially published in the **Federal Register** as an emergency rule for January 1 - February 28, 2002 (67 FR 1540, January 11, 2002), and as a proposed rule for all of 2002 (67 FR 1555, January 11, 2002), then finalized effective March 1, 2002 (67 FR 10490, March 7, 2002). The final rule was subsequently amended at 67 FR 15338, April 1, 2002, at 67 FR 18117, April 15, 2002, at 67 FR 30604, May 7, 2002, at 67 FR 40870, June 14, 2002, at 67 FR

44778, July 5, 2002, at 67 FR 48571, July 25, 2002, at 67 FR 50835, August 6, 2002, at 67 FR 55166, August, 28, 2002, and at 67 FR 57973, September 13, 2002.

The new emergency rule in the Pacific Coast groundfish fishery (67 FR 57973, September 13, 2002) published latitude/longitude coordinates for the DBCA in the hundredths of a degree instead of in degrees and minutes. For consistency sake and at the request of the United States Coast Guard, this document re-publishes latitude/longitude coordinates for the DBCA in degrees and minutes.

Corrections

In the FR Doc. 02–23383 in the issue of Friday, September 13, 2002 (67 FR 57973) make the following corrections:

1. On pages 57975 - 57976, section IV (A) (22) is corrected to read as follows:

(22) Darkblotched Rockfish Conservation Area. There is hereby established a Darkblotched Rockfish Conservation Area (DBCA). The DBCA extends south from the U.S./Canada border (48°30' N. lat.) to 40°10' N. lat. The DBCA is defined along its eastern boundary by straight lines connecting all of the following points in the order stated:

48°14.00' N. lat., 125°36.00' W. long.;
48°8.00' N. lat., 125°38.00' W. long.;
47°57.00' N. lat., 125°30.00' W. long.;
48°20.00' N. lat., 125°18.00' W. long.;
48°20.00' N. lat., 125°3.00' W. long.;
48°23.00' N. lat., 124°50.00' W. long.;
48°17.00' N. lat., 124°56.50' W. long.;
48°6.00' N. lat., 125°0.00' W. long.;
48°9.00' N. lat., 125°18.00' W. long.;
48°6.00' N. lat., 125°18.00' W. long.;
47°59.00' N. lat., 125°16.00' W. long.;
47°49.00' N. lat., 125°3.00' W. long.;
47°42.00' N. lat., 125°4.50' W. long.;
47°31.00' N. lat., 124°54.00' W. long.;
47°24.00' N. lat., 124°46.00' W. long.;
47°18.50' N. lat., 124°45.00' W. long.;
47°8.50' N. lat., 124°56.00' W. long.;
47°0.50' N. lat., 124°54.50' W. long.;
47°1.00' N. lat., 124°58.50' W. long.;
46°57.00' N. lat., 124°54.50' W. long.;
47°0.00' N. lat., 124°49.00' W. long.;
46°54.00' N. lat., 124°48.00' W. long.;
46°54.50' N. lat., 124°52.50' W. long.;
46°41.50' N. lat., 124°43.00' W. long.;
46°34.50' N. lat., 124°28.50' W. long.;
46°29.00' N. lat., 124°30.00' W. long.;
46°20.00' N. lat., 124°36.50' W. long.;
46°18.00' N. lat., 124°38.00' W. long.;
46°17.00' N. lat., 124°35.50' W. long.;
46°17.00' N. lat., 124°22.50' W. long.;
46°16.00' N. lat., 124°20.00' W. long.;
46°12.00' N. lat., 124°35.00' W. long.;
46°10.50' N. lat., 124°39.00' W. long.;
46°8.91' N. lat., 124°39.11' W. long.;
46°0.97' N. lat., 124°38.56' W. long.;
45°57.05' N. lat., 124°36.42' W. long.;
45°54.29' N. lat., 124°40.02' W. long.;
45°47.19' N. lat., 124°35.58' W. long.;
45°41.75' N. lat., 124°28.32' W. long.;
45°34.16' N lat., 124°24.24' W. long.,
45°27.10' N. lat., 124°21.74' W. long.,
45°17.15' N. lat.; 124°17.85' W. long.,
44°59.52' N. lat., 124°19.34' W. long.,
44°49.31' N. lat.; 124°29.97' W. long.,
44°45.64' N. lat., 124°33.89' W. long.;
44°33.00' N. lat., 124°36.88' W. long.;
44°28.21' N. lat., 124°44.72' W. long.;
44°13.17' N. lat., 124°56.36' W. long.;
43°56.34' N. lat., 124°55.74' W. long.;
43°56.47' N. lat., 124°34.61' W. long.;
43°42.73' N. lat., 124°32.41' W. long.;
43°30.93' N. lat., 124°34.43' W. long.;
43°17.45' N. lat., 124°41.16' W. long.;
43°7.04' N. lat., 124°41.25' W. long.;
43°3.45' N. lat., 124°44.36' W. long.;
43°3.90' N. lat., 124°50.81' W. long.;
42°55.70' N. lat., 124°52.79' W. long.;
42°54.12' N. lat., 124°47.36' W. long.;
42°44.00' N. lat., 124°42.38' W. long.;
42°38.23' N. lat., 124°41.25' W. long.;
42°33.03' N. lat., 124°42.38' W. long.;
42°31.90' N. lat., 124°42.04' W. long.;
42°30.09' N. lat., 124°42.67' W. long.;
42°28.28' N. lat., 124°47.08' W. long.;
42°25.22' N. lat., 124°43.51' W. long.;
42°19.23' N. lat., 124°37.92' W. long.;
42°16.29' N. lat., 124°36.11' W. long.;
42°5.66' N. lat., 124°34.92' W. long.;
42°0.00' N. lat., 124°35.27' W. long.;
42°0.16' N. lat., 124°34.70' W. long.;
41°47.04' N. lat., 124°27.65' W. long.;
41°32.92' N. lat., 124°28.79' W. long.;
41°10.12' N. lat., 124°20.50' W. long.;
40°51.37' N. lat., 124°23.39' W. long.;
40°40.73' N. lat., 124°30.37' W. long.;
40°36.05' N. lat., 124°37.09' W. long.;
40°32.64' N. lat., 124°38.48' W. long.;
40°23.30' N. lat., 124°31.60' W. long.;
40°23.93' N. lat., 124°28.05' W. long.;
40°21.99' N. lat., 124°24.01' W. long.;
40°21.10' N. lat., 124°27.87' W. long.;
40°18.67' N. lat., 124°25.99' W. long.;
40°19.05' N. lat., 124°22.53' W. long.;
40°15.02' N. lat., 124°25.76' W. long.;
40°16.55' N. lat., 124°34.01' W. long.;
and
40°10.03' N. lat., 124°21.12' W. long.

The DBCA is defined along its western boundary by straight lines connecting all of the following points in the order stated:

48°15.00' N. lat., 125°42.50' W. long.;
48°13.00' N. lat., 125°39.00' W. long.;
48°8.50' N. lat., 125°45.00' W. long.;
48°6.00' N. lat., 125°46.50' W. long.;
48°3.50' N. lat., 125°37.00' W. long.;
48°1.50' N. lat., 125°40.00' W. long.;
47°57.00' N. lat., 125°37.00' W. long.;
47°55.50' N. lat., 125°28.50' W. long.;
47°58.00' N. lat., 125°25.00' W. long.;
48°0.50' N. lat., 125°24.50' W. long.;
48°3.50' N. lat., 125°21.00' W. long.;
48°2.00' N. lat., 125°19.50' W. long.;
48°0.00' N. lat., 125°21.00' W. long.;
47°58.00' N. lat., 125°20.00' W. long.;
47°58.00' N. lat., 125°18.00' W. long.;
47°52.00' N. lat., 125°16.50' W. long.;
47°49.00' N. lat., 125°11.00' W. long.;
47°46.00' N. lat., 125°6.00' W. long.;
47°44.50' N. lat., 125°7.50' W. long.;
47°42.00' N. lat., 125°6.00' W. long.;
47°38.00' N. lat., 125°7.00' W. long.;
47°30.00' N. lat., 125°0.00' W. long.;
47°28.00' N. lat., 124°58.50' W. long.;
47°23.00' N. lat., 124°51.00' W. long.;
47°17.00' N. lat., 124°53.00' W. long.;
47°15.00' N. lat., 125°0.00' W. long.;
47°8.00' N. lat., 124°59.00' W. long.;
47°1.00' N. lat., 125°0.00' W. long.;
46°55.00' N. lat., 125°2.00' W. long.;
46°51.00' N. lat., 124°57.00' W. long.;
46°41.00' N. lat., 124°51.00' W. long.;
46°34.00' N. lat., 124°38.00' W. long.;
46°30.50' N. lat., 124°41.00' W. long.;
46°33.00' N. lat., 124°32.00' W. long.;
46°29.00' N. lat., 124°32.00' W. long.;
46°20.00' N. lat., 124°39.00' W. long.;
46°16.00' N. lat., 124°37.00' W. long.;
46°15.50' N. lat., 124°27.00' W. long.;
46°13.17' N. lat., 124°37.87' W. long.;
46°13.17' N. lat., 124°38.75' W. long.;
46°10.50' N. lat., 124°42.00' W. long.;
46°6.21' N. lat., 124°41.85' W. long.;
46°3.02' N. lat., 124°50.28' W. long.;
45°57.00' N. lat., 124°45.52' W. long.;
45°43.44' N. lat., 124°46.03' W. long.;
45°35.82' N. lat., 124°45.72' W. long.;
45°35.70' N. lat., 124°42.89' W. long.;
45°24.45' N. lat., 124°38.21' W. long.;
45°11.68' N. lat., 124°39.38' W. long.;
44°57.94' N. lat., 124°37.02' W. long.;
44°44.28' N. lat., 124°50.79' W. long.;
44°32.63' N. lat., 124°54.21' W. long.;
44°23.20' N. lat., 124°49.87' W. long.;
44°13.18' N. lat., 124°58.81' W. long.;
43°57.92' N. lat., 124°58.29' W. long.;
43°50.12' N. lat., 124°53.36' W. long.;
43°49.53' N. lat., 124°43.96' W. long.;
43°42.76' N. lat., 124°41.40' W. long.;
43°24.00' N. lat., 124°42.61' W. long.;
43°19.74' N. lat., 124°45.12' W. long.;
43°19.63' N. lat., 124°52.95' W. long.;
43°17.41' N. lat., 124°53.02' W. long.;
42°49.15' N. lat., 124°54.93' W. long.;
42°46.74' N. lat., 124°53.39' W. long.;
42°43.76' N. lat., 124°51.64' W. long.;
42°45.41' N. lat., 124°49.35' W. long.;
42°43.92' N. lat., 124°45.92' W. long.;
42°38.87' N. lat., 124°43.38' W. long.;
42°34.78' N. lat., 124°46.56' W. long.;
42°31.47' N. lat., 124°46.89' W. long.;
42°31.00' N. lat., 124°44.28' W. long.;
42°29.22' N. lat., 124°46.93' W. long.;
42°28.39' N. lat., 124°49.94' W. long.;
42°26.28' N. lat., 124°47.60' W. long.;
42°19.58' N. lat., 124°43.21' W. long.;
42°13.75' N. lat., 124°40.06' W. long.;
42°5.12' N. lat., 124°39.06' W. long.;
41°59.99' N. lat., 124°37.72' W. long.;
41°59.33' N. lat., 124°37.68' W. long.;
41°47.93' N. lat., 124°31.79' W. long.;
41°21.35' N. lat., 124°30.35' W. long.;
41°7.11' N. lat., 124°25.25' W. long.;
41°7.12' N. lat., 124°25.05' W. long.;
40°57.37' N. lat., 124°30.25' W. long.;

40°41.03' N. lat., 124°33.21' W. long.;
40°33.70' N. lat., 124°42.50' W. long.;
40°22.72' N. lat., 124°32.06' W. long.;
40°16.97' N. lat., 124°31.51' W. long.;
40°18.68' N. lat., 124°50.44' W. long.; and
40°10.11' N. lat., 124°28.25' W. long.

The DBCA is closed to limited entry groundfish trawl fishing. Fishing with limited entry groundfish trawl gear is prohibited within the DBCA. It is unlawful to take and retain, possess, or land groundfish taken with limited entry groundfish trawl gear in the DBCA. Limited entry groundfish trawl vessels may transit through the DBCA, with or without groundfish on board, provided all groundfish trawl gear is stowed either: (1) below deck; or (2) if the gear cannot readily be moved, in a secured and covered manner, detached from all towing lines, so that it is rendered unusable for fishing. For the month of September 2002, all prohibitions that apply to the DBCA also apply to all waters inshore of the DBCA. These restrictions do not apply to Pacific whiting vessels using mid-water trawl gear to fish for their sector's primary whiting season allocation, as defined at 660.323(a)(3).

Dated: September 26, 2002.

William T. Hogarth,

Assistant Administrator for Fisheries, National Marine Fisheries Service.

[FR Doc. 02–25077 Filed 10–1–02; 8:45 am]

BILLING CODE 3510–22–S

DEPARTMENT OF COMMERCE

National Oceanic and Atmospheric Administration

50 CFR Part 679

[Docket No. 011218304–1304–01; I.D. 092402C]

Fisheries of the Exclusive Economic Zone Off Alaska; Pollock in Statistical Area 630 of the Gulf of Alaska

AGENCY: National Marine Fisheries Service (NMFS), National Oceanic and Atmospheric Administration (NOAA), Commerce.

ACTION: Closure.

SUMMARY: NMFS is prohibiting directed fishing for pollock in Statistical Area 630 in the Gulf of Alaska (GOA). This action is necessary to prevent exceeding the D season allowance of the pollock total allowable catch (TAC) for Statistical Area 630.

DATES: Effective 1200 hrs, Alaska local time (A.l.t.), October 2, 2002, until 2400 hrs, A.l.t., December 31, 2002.

FOR FURTHER INFORMATION CONTACT: Mary Furuness, 907–586–7228.

SUPPLEMENTARY INFORMATION: NMFS manages the groundfish fishery in the GOA exclusive economic zone according to the Fishery Management Plan for Groundfish of the Gulf of Alaska (FMP) prepared by the North Pacific Fishery Management Council under authority of the Magnuson-Stevens Fishery Conservation and Management Act. Regulations governing fishing by U.S. vessels in accordance with the FMP appear at subpart H of 50 CFR part 600 and 50 CFR part 679.

Within any fishing year, underage or overage of a seasonal allowance may be added to or subtracted from subsequent seasonal allowances in a manner to be determined by the Administrator, Alaska Region, NMFS (Regional Administrator), provided that the sum of the revised seasonal allowances does not exceed 30 percent of the annual TAC apportionment for the Central and Western Regulatory Areas in the GOA (§ 679.20(a)(5)(ii)(C)). For 2002, 30 percent of the annual TAC for the Central and Western Regulatory Areas is 15,187 mt. For 2002, the Regional Administrator has determined that within each area for which a seasonal allowance is established, any overage or underage of harvest from the previous season(s) shall be subtracted from or added to the seasonal allowance of the following season provided that the resulting sum of seasonal allowances in the Central and Western Regulatory Areas does not exceed 15,187 mt in any single season. The D season allowance of the pollock TAC in Statistical Area 630 is 3,803 metric tons (mt) as established by an emergency rule implementing 2002 harvest specifications and associated management measures for the groundfish fisheries off Alaska (67 FR 956, January 8, 2002 and 67 FR 34860, May 16, 2002). The C season allowance in Statistical Area 630 was exceeded by 2,855 mt, therefore the Regional Administrator, in accordance with § 679.20(a)(5)(ii)(C), is reducing the D season pollock TAC in Statistical Area 630 by 2,855 mt to 948 mt.

In accordance with § 679.20(d)(1)(i), the Regional Administrator has determined that the D season allowance of the pollock TAC in Statistical Area 630 will soon be reached. Therefore, the Regional Administrator is establishing a directed fishing allowance of 908 mt, and is setting aside the remaining 40 mt as bycatch to support other anticipated groundfish fisheries. In accordance with § 679.20(d)(1)(iii), the Regional Administrator finds that this directed fishing allowance will soon be reached. Consequently, NMFS is prohibiting directed fishing for pollock in Statistical Area 630.

Maximum retainable bycatch amounts may be found in the regulations at § 679.20(e) and (f).

Classification

This action responds to the best available information recently obtained from the fishery. The Assistant Administrator for Fisheries, NOAA, finds good cause to waive the requirement to provide prior notice and opportunity for public comment pursuant to the authority set forth at 5 U.S.C. 553(b)(B) as such requirement is contrary to the public interest. This requirement is contrary to the public interest as it would delay the closure of the fishery, lead to exceeding the TAC, and therefore reduce the public's ability to use and enjoy the fishery resource.The Assistant Administrator for Fisheries, NOAA, also finds good cause to waive the 30–day delay in the effective date of this action under 5 U.S.C. 553(d)(3). This finding is based upon the reasons provided above for waiver of prior notice and opportunity for public comment.This action is required by § 679.20 and is exempt from review under Executive Order 12866.

Authority: 16 U.S.C. 1801 *et seq.*

Dated: September 26, 2002.

Virginia M. Fay,

Acting Director, Office of Sustainable Fisheries, National Marine Fisheries Service.

[FR Doc. 02–25065 Filed 9–27–02; 4:12 pm]

BILLING CODE 3510–22–S

DEPARTMENT OF COMMERCE

National Oceanic and Atmospheric Administration

50 CFR Part 679

[Docket No. 011218304–1304–01; I.D. 092602C]

Fisheries of the Exclusive Economic Zone Off Alaska; Reallocation of Pacific Cod in the Bering Sea and Aleutian Islands Management Area (BSAI)

AGENCY: National Marine Fisheries Service (NMFS), National Oceanic and Atmospheric Administration (NOAA), Commerce.

ACTION: Reallocation.

SUMMARY: NMFS is reallocating the projected unused amount of Pacific cod from vessels using trawl and jig gear to vessels using hook-and-line or pot gear

in the BSAI. These actions are necessary to allow the 2002 total allowable catch (TAC) of Pacific cod to be harvested.

DATES: Effective September 27, 2002, until 2400 hours, A.l.t., December 31, 2002.

FOR FURTHER INFORMATION CONTACT: Mary Furuness, 907–586–7228.

SUPPLEMENTARY INFORMATION: NMFS manages the groundfish fishery in the BSAI exclusive economic zone according to the Fishery Management Plan for the Groundfish Fishery of the Bering Sea and Aleutian Islands Area (FMP) prepared by the North Pacific Fishery Management Council under authority of the Magnuson-Stevens Fishery Conservation and Management Act. Regulations governing fishing by U.S. vessels in accordance with the FMP appear at subpart H of 50 CFR part 600 and 50 CFR part 679.

The emergency rule implementing the 2002 harvest specifications and associated management measures for the groundfish fisheries off Alaska (67 FR 956, January 8, 2002, and 67 FR 34860, May 16, 2002) established the amount of the 2002 BSAI Pacific cod TAC as 185,000 metric tons (mt) after subtraction of the community development quota (CDQ) reserves and apportionment of the reserve. Pursuant to § 679.20(a)(7)(i)(A), 3,700 mt was allocated to vessels using jig gear, 94,350 mt to vessels using hook-and-line or pot gear, and 86,950 mt to vessels using trawl gear. The share of the Pacific cod TAC allocated to trawl gear was further allocated 50 percent to catcher vessels and 50 percent to catcher/processor vessels (§ 679.20(a)(7)(i)(B)). The share of the Pacific cod TAC allocated to hook-and-line or pot gear was further allocated (i) 80 percent to catcher/processor vessels using hook-and-line gear; (ii) 0.3 percent to catcher vessels using hook-and-line gear; (iii) 18.3 percent to vessels using pot gear; and (iv) 1.4 percent to catcher vessels less than 60 ft length overall (18.3 m) that use either hook-and-line or pot gear (§ 679.20(a)(7)(i)(C)).

As of September 7, 2002, the Administrator, Alaska Region, NMFS (Regional Administrator), has determined that trawl catcher/processors will not be able to harvest 3,000 mt and trawl catcher vessels will not be able to harvest 1,000 mt of Pacific cod allocated to those vessels under § 679.20(a)(7)(i)(B). Therefore, in accordance with § 679.20(a)(7)(ii)(C), NMFS apportions 4,000 mt of Pacific cod from trawl gear to vessels using hook-and-line or pot gear.

The Regional Administrator also has determined that vessels using jig gear will not harvest 3,400 mt of their Pacific cod allocation by the end of the year. Therefore, in accordance with § 679.20(a)(7)(ii)(C), NMFS is reallocating the unused amount of 3,400 mt of Pacific cod allocated to vessels using jig gear to vessels using hook-and-line or pot gear.

In accordance with § 679.20(a)(7)(ii)(C)(1), 200 mt of the combined reallocation of unused Pacific cod from trawl and jig gear is apportioned to catcher vessels using hook-and-line gear. In accordance with § 679.20(a)(7)(ii)(C)(2), the remaining combined reallocation of unused Pacific cod from trawl and jig gear, 7,200 mt, is apportioned so that catcher/processor vessels using hook-and-line gear will receive 95 percent and vessels using pot gear will receive 5 percent of the reallocation.

The harvest specifications for Pacific cod established by the emergency rule implementing 2002 harvest specifications and associated management measures for the groundfish fisheries off Alaska (67 FR 956, January 8, 2002, and 67 FR 34860, May 16, 2002) are revised as follows: 300 mt to vessels using jig gear, 81,920 mt to catcher processor vessels using hook-and-line gear, 482 mt to catcher vessels using hook-and-line gear, 17,535 mt to pot gear, 40,475 mt to trawl catcher/processors, and 42,475 mt to trawl catcher vessels.

Classification

This action responds to the best available information recently obtained from the fishery. The Assistant Administrator for Fisheries, NOAA, finds good cause to waive the requirement to provide prior notice and opportunity for public comment pursuant to the authority set forth at 5 U.S.C. 553(b)(B) as such requirement is contrary to the public interest. This requirement is contrary to the public interest as it would delay the implementation of these measures in a timely fashion in order to allow full utilization of the Pacific cod TAC, and therefore reduce the public's ability to use and enjoy the fishery resource.

The Assistant Administrator for Fisheries, NOAA, also finds good cause to waive the 30–day delay in the effective date of this action under 5 U.S.C. 553(d)(3). This finding is based upon the reasons provided above for waiver of prior notice and opportunity for public comment.

This action is taken under 50 CFR 679.20 and is exempt from OMB review under Executive Order 12866.

Authority: Authority: 16 U.S.C. 1801 *et seq.*

Dated: September 26, 2002.

Virginia M. Fay,

Acting Director, Office of Sustainable Fisheries, National Marine Fisheries Service.

[FR Doc. 02–25064 Filed 9–27–02; 4:12 pm]

BILLING CODE 3510–22–S

DEPARTMENT OF COMMERCE

National Oceanic and Atmospheric Administration

50 CFR Part 679

[Docket No. 011218304–1304–01; I.D. 092702A]

Fisheries of the Exclusive Economic Zone Off Alaska; Atka Mackerel in the Central Aleutian District

AGENCY: National Marine Fisheries Service (NMFS), NationalOceanic and Atmospheric Administration (NOAA), Commerce.

ACTION: Closure.

SUMMARY: NMFS is prohibiting directed fishing for Atka mackerel in the Central Aleutian District of the Bering Sea and Aleutian Islands management area (BSAI). This action is necessary to prevent exceeding the 2002 Atka mackerel total allowable catch (TAC) in this area.

DATES: Effective 1200 hrs, Alaska local time (A.l.t.) September 27, 2002, until 2400 hrs, A.l.t., December 31, 2002.

FOR FURTHER INFORMATION CONTACT: Mary Furuness, 907–586–7228.

SUPPLEMENTARY INFORMATION: NMFS manages the groundfish fishery in the BSAI exclusive economic zone according to the Fishery Management Plan for the Groundfish Fishery of the Bering Sea and Aleutian Islands Area (FMP) prepared by the North Pacific Fishery Management Council under authority of the Magnuson-Stevens Fishery Conservation and Management Act. Regulations governing fishing by U.S. vessels in accordance with the FMP appear at subpart H of 50 CFR part 600 and 50 CFR part 679.

The 2002 Atka mackerel TAC in the Central Aleutian District of the BSAI is 22,015 metric tons (mt) as established by an emergency rule implementing 2002 harvest specifications and associated management measures for the groundfish fisheries off Alaska (67 FR 956, January 8, 2002, and 67 FR 34860, May 16, 2002).

In accordance with § 679.20(d)(1)(i), the Administrator, Alaska Region, NMFS (Regional Administrator), has determined that the 2002 Atka mackerel TAC in the Central Aleutian District

will be reached. Therefore, the Regional Administrator is establishing a directed fishing allowance of 21,615 mt, and is setting aside the remaining 400 mt as bycatch to support other anticipated groundfish fisheries. In accordance with § 679.20(d)(1)(iii), the Regional Administrator finds that this directed fishing allowance will soon be reached. Consequently, NMFS is prohibiting directed fishing for Atka mackerel in the Central Aleutian District of the BSAI.

Maximum retainable bycatch amounts may be found in the regulations at § 679.20(e) and (f).

Classification

This action responds to the best available information recently obtained from the fishery. The Assistant Administrator for Fisheries, NOAA, finds good cause to waive the requirement to provide prior notice and opportunity for public comment pursuant to the authority set forth at 5 U.S.C. 553(b)(B) as such requirement is contrary to the public interest. This requirement is contrary to the public interest as it would delay the closure of the fishery, lead to exceeding the TAC, and therefore reduce the public's ability to use and enjoy the fishery resource.

The Assistant Administrator for Fisheries, NOAA, also finds good cause to waive the 30–day delay in the effective date of this action under 5 U.S.C. 553(d)(3). This finding is based upon the reasons provided above for waiver of prior notice and opportunity for public comment.

This action is required by section 679.20 and is exempt from review under Executive Order 12866.

Authority: Authority: 16 U.S.C. 1801 *et seq.*

Dated: September 27, 2002.

John H. Dunnigan,

Director, Office of Sustainable Fisheries, National Marine Fisheries Service.

[FR Doc. 02–25063 Filed 9–27–02; 4:12 pm]

BILLING CODE 3510–22–S

Proposed Rules

Federal Register
Vol. 67, No. 191
Wednesday, October 2, 2002

This section of the FEDERAL REGISTER contains notices to the public of the proposed issuance of rules and regulations. The purpose of these notices is to give interested persons an opportunity to participate in the rule making prior to the adoption of the final rules.

SMALL BUSINESS ADMINISTRATION

13 CFR Part 121

RIN 3245–AE98

Small Business Size Standards; Tour Operators

AGENCY: U.S. Small Business Administration (SBA).

ACTION: Proposed rule.

SUMMARY: The Small Business Administration (SBA) proposes to modify the way average annual receipts are calculated for firms in the Tour Operators industry (North American Industry Classification System (NAICS) 561520). This would exclude funds received in trust for unaffiliated third parties from the calculation of a tour operator's receipts. SBA would retain the size standard figure of $6.0 million.

DATES: Comments must be received on or before November 1, 2002.

ADDRESSES: Comments to Gary M. Jackson, Assistant Administrator for Size Standards, 409 3rd Street, SW., Mail Code 6530, Washington, DC 20416; or via email to *SIZESTANDARDS@sba.gov.* Upon request, SBA will make all public comments available.

FOR FURTHER INFORMATION CONTACT: Robert Ray, Office of Size Standards, (202) 205–6618.

SUPPLEMENTARY INFORMATION: SBA has received requests from tour operators and an industry association to review the size standard for the Tour Operators industry (NAICS 561520). These organizations request that SBA exclude from the calculation of a tour operator's average annual receipts monies passed through to suppliers of travel components (*i.e.*, meals; ground, air, and rail transportation; lodging; and sightseeing and entertainment). These monies typically account for a majority of a tour operator's receipts.

Under SBA's Small Business Size Regulations (13 CFR 121.104), the receipts of a firm are based on information reported on a firm's Federal tax returns. Generally, receipts reported to the Internal Revenue Service (IRS) include a firm's gross receipts from the sale of goods and services. The petitioners, however, believe that receipts collected for payment to the actual transportation and lodging providers that are reimbursed by a tour operator should not be included in the calculation of average annual receipts for purposes of determining the size of a tour operator.

SBA has evaluated this issue and agrees that certain types of receipts should be excluded from the calculation of size for firms in this industry. Related to this issue is whether the current size standard is appropriate if a significant proportion of receipts is excluded from a firm's gross receipts. Based on a review of industry data discussed below, SBA believes the current size standard is appropriate if size is measured on an adjusted basis rather than by gross receipts.

Accordingly, SBA proposes a revision to the size standard for the Tour Operators industry by excluding funds received in trust for unaffiliated third parties while retaining the size standard of $6 million in average annual receipts.

Calculation of Average Annual Receipts

SBA reviews requests to exclude receipts of certain business activities on a case-by-case basis. The structure of this review is consistent with past proposed rules on this issue (*e.g.*, freight forwarders, 65 FR 48601, dated August 9, 2000, and conference management planners, 60 FR 57982, dated January 31, 1996). These reviews identify and evaluate five industry characteristics under which it might be appropriate to exclude certain funds received and later transmitted to an unaffiliated third party as follows:

1. A broker or agent-like relationship exists between a firm and a third party provider which is a dominant or crucial activity of firms in the industry;

2. The pass-through funds associated with the broker or agent-like relationship are a significant proportion of the firm's total receipts;

3. Consistent with the normal business practice of firms in the industry, a firm's income remaining after the pass-through funds are remitted to a third party is typically derived from a standard commission or fee;

4. Firms in this industry do not normally consider billings that are reimbursed to other firms as their own income, preferring instead to count only receipts that are retained for their own use; and,

5. Federal Government agencies which engage in the collection of statistics and other industry analysts typically represent receipts of the industry's firms on an adjusted receipts basis.

SBA's review of information obtained on the Tour Operators industry finds that these characteristics exist in the industry. The prevalence of these characteristics supports the proposal to exclude funds received in trust for unaffiliated third parties from the calculation of a tour operator's receipts for size standard purposes. The following discussion summarizes these findings:

1. Agent-Like Relationship

The North American Industry Classification System Manual (1997) states that this industry encompasses establishments primarily engaged in arranging and assembling tours. The tours are sold through travel agencies or tour operators. These firms act as agents, ensuring that transportation, accommodation and facility providers, and lecturers (for whom the funds are collected) are paid. Therefore, the dominant activity in this industry involves a broker or agent-like relationship with the tour operator passing through funds from customers to providers.

2. Pass-Through Funds Are a Significant Proportion of Total Receipts

It is a normal practice in this industry for the client's bill to include charges of the various providers of services and facilities which are temporarily held in trust by the tour operator for remittance to the third party providers. The charges by the other providers are incorporated in the bill to the customer or client. Moreover, these remitted funds are typically much larger in size than the tour operator's own earnings for arranging the tour. Estimates of these pass-through funds range from 80 percent to 95 percent of total revenues received by tour operators.

3. Remaining Income Is Derived From a Standard Commission or Fee

The tour operator earns income as the balance after compensating service providers. This arrangement effectively involves a commission or fee for putting together the tour.

4. Firms in This Industry Only Count Receipts Retained for Their Own Use

Firms in this industry do not consider funds collected for third parties as their own funds. As discussed above, the role of tour operator is to set up the tour, linking customers with the necessary services for a successful tour including facilitating the bill, fees, and services associated with transportation, accommodation, food servicing, and guide information that are paid on behalf of the customer. Furthermore, some states, such as California, place restrictions on a tour operator's use of funds collected and owed to providers. This information indicates that charges for a tour are mostly not those of the tour operator.

5. Federal Agencies and Industry Analysts Typically Represent Receipts of These Firms on an Adjusted Receipts Basis

Data from the U.S. Bureau of the Census (Census Bureau) addressing how to count receipts in this industry show firm receipts as the ''DIFFERENCE between the selling price of their tours and the amount paid to suppliers' (see Census Form SV–7305). This adjusted receipts basis is equivalent to reporting receipts on a commission or fee basis. Thus, the Census Bureau recognizes that the normal arrangement in this industry is to handle money for others, retaining a fraction on an adjusted receipts basis equivalent to a commission or fee. Similarly, the credit reporting firm of Dun and Bradstreet also reports receipts for firms in this industry by using adjusted income, not gross billings.

Based on these findings, SBA believes that it is appropriate to exclude amounts collected on behalf of third parties when calculating receipts of businesses in the Tour Operators industry, as SBA presently does for real estate agencies, travel agencies, freight forwarders, conference management planners, and advertising agencies. More specifically, any charges for transportation, food servicing, lodging and other direct fees associated with tours for which the tour operator holds money in trust for an unaffiliated third party, and to which the tour operator does not have a claim of right, would be excluded from gross receipts. Only the difference between the selling price of the tour and the amount paid the suppliers would be attributable to the tour operator. All other sources of income, such as selling merchandise, must also be included in the calculation of a tour operator's receipts.

Size Standard for the Tour Operators Industry

The changed definition of receipts would effectively increase the current $6.0 million size standard. A firm with receipts exclusive of pass-throughs to third parties of $6.0 million would be equivalent to a firm with gross billings of $30 million (assuming 80 percent of billings were paid to third parties). Accordingly, SBA believes it is necessary to review the size standard along with its proposal to allow exclusions for pass-through funds. The following discussion describes SBA's size standards methodology and the evaluation of data on the Tour Operators industry, as well as other industries for comparison purposes.

Size Standards Methodology

Industry Analysis: The Small Business Act requires that size standards vary by industry to the extent necessary to reflect differing industry characteristics (Section 3(a)(3)). SBA has in place two ''base or anchor size standards'' that apply to most industries—500 employees for manufacturing industries and $6 million for nonmanufacturing industries. SBA established 500 employees as the anchor size standard for the manufacturing industries at SBA's inception in 1953 and shortly thereafter established a $1 million size standard for the nonmanufacturing industries. The receipts-based anchor size standard for the nonmanufacturing industries has been periodically adjusted for inflation so that, currently, the anchor size standard for the nonmanufacturing industries is $6 million. Anchor size standards are presumed to be appropriate for an industry unless its characteristics indicate that larger firms have a much greater significance within that industry than for the typical industry with an anchor size standard.

When evaluating a size standard, the characteristics of the specific industry under review are compared to the characteristics of a group of industries, referred to as a comparison group. A comparison group is a large number of industries grouped together to represent the typical industry. It can be comprised of all industries, all manufacturing industries, all industries with receipt-based size standards, or some other logical grouping. If the characteristics of a specific industry are similar to the average characteristics of the comparison group, then the anchor size standard is considered appropriate for the industry. If the specific industry's characteristics are significantly different from the average characteristics of the comparison group, a size standard higher or, in rare cases, a size standard lower than the anchor size standard may be considered appropriate. The larger the differences between the specific industry's characteristics and the comparison group, the larger the difference between the appropriate industry size standard and the anchor size standard. Only when all or most of the industry characteristics are significantly smaller than the average characteristics of the comparison group, or other industry specific considerations strongly suggest the anchor size standard would be an unreasonably high size standard for the industry under review, will SBA adopt a size standard below the anchor size standard.

In 13 CFR 121.102 (a) and (b), evaluation factors are listed which are the primary factors describing the structural characteristics of an industry—average firm size, distribution of firms by size, start-up costs, and industry concentration. The analysis also often examines a fifth factor—the possible impact of a size standard revision on SBA's programs. The SBA generally considers these five factors to be the most important evaluation factors in establishing or revising a size standard for an industry. However, it will also consider and evaluate other information that it believes relevant to the decision on a size standard as the situation warrants for a particular industry. Public comments submitted on proposed size standards are also an important source of additional information that SBA closely reviews before making a final decision on a size standard. Below is a brief description of each of the five evaluation factors.

1. Average firm size is simply total industry receipts (or number of employees) divided by the number of firms in the industry. If the average firm size of an industry is significantly higher than the average firm size of a comparison industry group, this fact would be viewed as supporting a size standard higher than the anchor size standard. Conversely, if the industry's average firm size is similar to, or significantly lower than that of the comparison industry group, it would be a basis to adopt the anchor size standard or, in rare cases, a lower size standard.

2. The distribution of firms by size examines the proportion of industry receipts, employment or other economic

activity accounted for by firms of different sizes in an industry. If the preponderance of an industry's economic activity is by smaller firms, this tends to support adoption of the anchor size standard. The opposite is the case for an industry in which the distribution of firms indicates that economic activity is concentrated among the largest firms in an industry. In this rule, the SBA is comparing the size of firm within an industry to the size of firm in the comparison group at which predetermined percentages of receipts are generated by firms smaller than a particular size firm. For example, for tour operators, 50 percent of total industry receipts are generated by firms of $4.4 million in adjusted receipts and less. This contrasts with the comparison group (composed of industries having a $6 million size standard) in which firms of $5.8 million or less in receipts on average generated 50 percent of total industry receipts. Viewed in isolation, this somewhat (but not significantly) lower figure for tour operators suggests that a nonmanufacturer anchor size standard of $6.0 million may be warranted. Other size distribution comparisons in the industry analysis include 40 percent, 60 percent and 70 percent, as well as the 50 percent comparison discussed above.

3. Start-up costs affect a firm's initial size because entrants into an industry must have sufficient capital to start and maintain a viable business. To the extent that firms entering into an industry have greater financial requirements than firms in other industries, the SBA is justified in considering a higher size standard. In lieu of direct data on start-up costs, SBA is using a proxy measure to assess the financial burden for entry-level firms. SBA is using nonpayroll costs per establishment as a proxy measure for start-up costs. This is derived by first calculating the percent of receipts in an industry that are either retained or expended on costs other than payroll costs. (The figure comprising the numerator of this percentage is mostly composed of capitalization costs, overhead costs, materials costs, and the costs of goods sold or inventoried.) This percentage is then applied to the average receipts of an establishment (a business entity operating at a single location) to arrive at nonpayroll costs per establishment. An industry with a significantly higher level of nonpayroll costs per establishment than that of the average of the comparison group is likely to have higher start-up costs that would tend to support a size standard higher than the anchor size standard. Conversely, if the industry showed the same, or somewhat lower nonpayroll costs per establishment when compared to the comparison group of anchor size standard industries, the anchor size standard would be considered the appropriate size standard.

4. Industry competition is assessed by measuring the proportion or share of industry receipts obtained by firms that are among the largest firms in an industry. In this rule, the SBA compared the proportion of industry receipts generated by the four largest firms in the industry—generally referred to as the ''four-firm concentration ratio—with the average four-firm concentration ratio of industries in the comparison groups. If a significant proportion of economic activity within the industry is concentrated among a few relatively large producers, SBA tends to set a size standard higher than the anchor size standard to assist firms in a broader size range to compete with firms that are larger and more dominant in the industry. In general, however, SBA does not consider this to be an important factor in assessing a size standard if the four-firm concentration ratio falls below 40 percent for an industry under review.

5. Competition for Federal procurements and SBA Financial Assistance. SBA also evaluates the possible impact of a size standard on its programs to determine whether small businesses defined under the existing size standard are receiving a reasonable level of assistance. This assessment most often focuses on the proportion or share of Federal contract dollars awarded to small businesses in the industry in question. In general, the lower the share of Federal contract dollars awarded to small businesses in an industry which receives significant Federal procurement revenues, the greater is the justification for a size standard higher than the existing one.

As another factor to evaluate the impact of a size standard on SBA programs, the volume of guaranteed loans within an industry and the size of firms obtaining loans in its financial assistance programs is sometimes assessed to determine whether the current size standard may restrict the level of financial assistance to firms in that industry. If small businesses receive ample assistance through these programs, or if the financial assistance is provided mainly to small businesses much lower than the size standard, a change to the size standard (especially, if it is already above the anchor size standard) may not be appropriate.

Evaluation of Industry Size Standard

Industry Structure Considerations: The two tables below show the characteristics for the Tour Operators industry and for the comparison group. (The data for the Tour Operators Industry is based on Census data using adjusted receipts in which pass-through receipts are excluded.) The comparison group is comprised of all industries with a $6 million receipts-based size standards (referred to as the nonmanufacturing anchor group). Since SBA's size standards analysis is assessing whether the tour operators size standard should be higher than the nonmanufacturing anchor size standard, this is the most logical set of industries to group together for the industry analysis. The data on this comparison group provide an additional perspective on the size of firms in related industries and their industry structure. SBA examined economic data on these industries from a special tabulation of the 1997 Economic Census prepared under contract by the U.S. Bureau of the Census, SBA internal loan data bases, and Federal contract award data for fiscal years 1999–2000 from the Federal Procurement Data Center.

Table 1 below examines the size distribution of firms. For this factor, SBA is evaluating the size of firm that accounts for predetermined percentages of total industry receipts (40 percent, 50 percent, 60 percent and 70 percent). (The size of firm in the Tour Operators Industry using Census data derived for the SBA, is based on adjusted receipts in which pass-through revenues are excluded.) The table shows firms up to a specific size that, along with smaller firms, accounts for a specific percentage of total industry receipts. For example, tour operators of $2.7 million or less in receipts obtained 40 percent of total industry receipts. This contrasts with the nonmanufacturing anchor group in which firms of $3.2 million or less in receipts obtained 40 percent of total industry receipts in the average industry.

TABLE 1.—SIZE DISTRIBUTIONS OF FIRMS IN THE TOUR OPERATORS INDUSTRY AND THE NONMANUFACTURING ANCHOR GROUP

[Data in millions of dollars]

Category	Size of firm at 40 percent	Size of firm at 50 percent	Size of firm at 60 percent	Size of firm at 70 percent
Tour Operators	$2.7	$4.4	$8.2	$17.2
Nonmanufacturing Anchor Group	$3.2	$5.8	$11.8	$28.0

These data indicate that $6.0 million (exclusive of pass-through receipts) is an appropriate size standard for the industry of tour operators. At a given coverage level, using pass-through excluded receipts for tour operators, the size of firm for the Tour Operators industry is moderately lower than the comparison group. Generally, the tour operator's figures are about 75 percent to 85 percent of the averages for the nonmanufacturer anchor group of industries. These relatively small differences between the characteristics of the Tour Operators industry and nonmanufacturer anchor group are not sufficient, however, to warrant a size standard lower than $6 million.

Table 2 lists three other evaluation factors for the Tour Operators industry and the comparison group. These include comparisons of average firm size, start-up costs (as measured by nonpayroll receipts per establishment), and the four-firm concentration ratio.

TABLE 2.—INDUSTRY CHARACTERISTICS OF THE TOUR OPERATORS INDUSTRY AND THE NONMANUFACTURING ANCHOR GROUP

Category	Average firm size		Non-payroll receipts per establishment (million)	Four-firm concentration ratio
	Receipts (millions)	Employees		
Tour Operators	$0.86	12.0	$0.49	7.2%
Nonmanufacturing Anchor Group	$0.95	10.6	$0.56	14.4%

For tour operators, average firm size in receipts (exclusion of pass through receipts) is only slightly lower than the nonmanufacturing anchor group while its average firm size in employees is slightly higher. These differences with the comparison group are insignificant and support a size standard at the nonmanufacturer anchor level of $6.0 million. Its nonpayroll receipts per establishment indicator is only slightly smaller than the comparison group while its four-firm concentration ratio is low, indicating that the industry is not dominated by large businesses, similar to the general pattern of the nonmanufacturing anchor group. The latter two factors support the other factors in indicating that the nonmanufacturer anchor size standard is appropriate for tour operators. Overall, all of the industry factors reviewed support an anchor size standard of $6 million.

SBA Program Considerations: SBA also reviews its size standards from the relationship with its programs. Tour operators have received SBA financial assistance in two programs. Under SBA's 7(a) loan program, tour operators obtained 18 loans for $3 million in fiscal year (FY) 1999, 25 loans for $4.3 million in FY 2000, and 17 loans for $1.3 million in FY 2001. All but three of these loans were to Tour Operators with fewer than 20 employees, a size that SBA estimates is less than $1 million in receipts using adjusted receipts as a measure. As a result of the terrorist attacks of September 11, 95 tour operators obtained Economic Injury Disaster Assistance loans (EIDL) amounting to $8.6 million. SBA declined, however, 11 EIDL applications from tour operators due to their exceeding the current size standard based on average annual receipts, but without the exclusion for pass-through revenues proposed in this rule. In the case of Federal procurements to tour operators, there were no Federal procurements in either FY 1999 or FY 2000. Given the low incidence of lending activity in these two programs and the absence of Federal procurement for tour services, no special consideration beyond the industry analysis is needed on the tour operators size standard.

Overview: Based on a review of the evaluation factors, SBA is proposing a $6 million adjusted receipts size standard. All of the five industry evaluation factors support a size standard at the size of the nonmanufacturing anchor size standard.

Dominant in Field of Operation: Section 3(a) of the Small Business Act defines a small concern as one that is (1) independently owned and operated, (2) not dominant in its field of operation and (3) within detailed definitions or size standards established by the SBA Administrator. The SBA considers as part of its evaluation of a size standard whether a business concern at or below a size standard would be considered dominant in its field of operation. This assessment generally considers the market share of firms at the proposed or final size standard, or other factors that may show whether a firm can exercise a major controlling influence on a national basis in which significant numbers of business concerns are engaged.

SBA has determined that no firm at or below this size standard for the Tour Operators industry would be of a sufficient size to dominate its field of operation. The largest firm at the size standard level generates less than 0.2 percent of total industry receipts. This level of market share effectively precludes any ability for a firm at or below the size standard from exerting a controlling effect on this industry.

Alternative Size Standards: SBA considered as an alternative size standard the $3 million size standard presently proposed for the related Travel Agencies industry (see 67 FR 11881, date March 15, 2002). That size standard uses adjusted receipts to measure the size of a travel agency. As discussed above, all evaluation factors pointed to a size standard at the nonmanufacturer anchor size standard

of $6 million. SBA's policy is to adopt a size standard below $6 million for a nonmanufacturing industry in rare cases and only when all or most of the industry characteristics are significantly smaller than the average characteristics of the comparison group, or other industry specific considerations strongly suggest the anchor size standard would be an unreasonably high size standard for the industry under review. In comparison to a travel agency, tour operators generate most of their receipts from packaging tours, which have significantly higher receipts per transaction than ticketing travel accommodations by travel agencies. Tour packages for clients quite often are made for 40 to 60 individuals and involve a combination of travel, lodging, entertainment and other tourist activities. Thus, SBA considers a $3 million size standard too low for the Tour Operators industry.

The SBA welcomes public comments on its size standard for the Tour Operators industry. Comments on alternatives, including the option of retaining the size standard at $6 million measured in gross receipts as discussed above, should present the reasons that would make them preferable to the size standard.

Compliance With Executive Orders 12866, 12988, and 13132, the Paperwork Reduction Act (44 U.S.C. chapter 35), and the Regulatory Flexibility Act (5 U.S.C. 601–612)

The Office of Management and Budget (OMB) has determined that this proposed rule is a ''significant'' regulatory action for purposes of Executive Order 12866. Size standards determine which businesses are eligible for Federal small business programs. This is not a major rule under the Congressional Review Act, 5 U.S.C. 800. For the purpose of the Paperwork Reduction Act, 44 U.S.C. Ch. 35, SBA has determined that this rule would not impose new reporting or record keeping requirements, other than those required of SBA. For purposes of Executive Order 13132, SBA has determined that this rule does not have any federalism implications warranting the preparation of a Federalism Assessment. For purposes of Executive Order 12988, SBA has determined that this rule is drafted, to the extent practicable, in accordance with the standards set forth in that order. Our Regulatory Impact Analysis follows.

Regulatory Impact Analysis

i. Is There a Need for the Regulatory Action?

SBA is chartered to aid and assist small businesses through a variety of financial, procurement, business development, and advocacy programs. To effectively assist intended beneficiaries of these programs, SBA must establish distinct definitions of which businesses are deemed small businesses. The Small Business Act (15 U.S.C. 632(a)) delegates to the SBA Administrator the responsibility for establishing small business definitions. It also requires that small business definitions vary to reflect industry differences. The supplementary information to this proposed rule explains the approach SBA follows when analyzing a size standard for a particular industry. Based on that analysis, SBA believes that a change in the way receipts are measured for businesses in the Tour Operators industry is needed to better reflect their size and activities.

ii. What Are the Potential Benefits and Costs of This Regulatory Action?

The most significant benefit to businesses obtaining small business status as a result of this rule is eligibility for Federal small business assistance programs. Under this rule, 238 additional firms generating 21 percent of sales in the industry will obtain small business status and become eligible for these programs. These include SBA's financial assistance programs, economic injury disaster loans and Federal procurement preference programs for small businesses, 8(a) firms, small disadvantaged businesses, small businesses located in Historically Underutilized Business Zones (HUBZone), women-owned small businesses, and veteran-owned and service disabled veteran-owned small businesses, as well as those awarded through full and open competition after application of the HUBZone or small disadvantaged business price evaluation preference or adjustment. Through the assistance of these programs, small businesses may benefit by becoming more knowledgeable, stable, and competitive businesses.

Other Federal agencies also use SBA size standards for a variety of regulatory and program purposes. However, discussions with industry representatives identified no other uses of SBA' tour operators size standard. If such a case exists where SBA's size standard is not appropriate, an agency may establish its own size standards with the approval of the SBA Administrator (see 13 CFR 121.801).

The benefits of a size standard increase to a more appropriate level would accrue to three groups: (1) Businesses that benefit by gaining small business status from the higher size standards that also use small business assistance programs; (2) growing small businesses that may exceed the current size standards in the near future and who will retain small business status from the higher size standard; and (3) Federal agencies that award contracts under procurement programs that require small business status. Although there may be some procurements that are awarded tour operators, SBA's research for the last two completed fiscal years was unable to find any Federal contracting activity in this industry.

Newly defined small businesses would benefit from the SBA's 7(a) Guaranteed Loan Program. SBA estimates that three loans totaling approximately $0.6 million in new Federal loan guarantees would be made to these newly defined small businesses. This represents 21 percent (the percentage increase in coverage of sales in the industry by firms under the higher ''real'' size standard) of the $2.9 million yearly average in loans that were guaranteed by the SBA in this industry under these two financial programs from FY 1999 to FY 2001. These additional loan guarantees, because of their limited magnitude, will have virtually no impact on the overall availability of loans for SBA's loan programs, which have averaged about 50,000 loans totaling more than $12 billion per year in recent years.

The newly defined small businesses would also benefit from SBA's Economic Injury Disaster Loan (EIDL) Program. Since this program is contingent upon the occurrence and severity of a disaster, no meaningful estimate of benefits can be projected from future disasters. However, for the terrorist attacks of September 11, SBA has declined 11 applicants based on size. Many of these companies would likely qualify if pass-through receipts were excluded from a firm's measure of size in this industry. In addition, out of the newly eligible tour operators, eight more loans would likely be approved. Based on an analysis of September 11 EIDL assistance, this rule may result in $1.4 million to $2.7 million in additional loans.

Federal agencies may benefit from the higher size standards if the newly defined and expanding small businesses compete for more set-aside procurements. However, the last two

fiscal years have seen no Federal contracting in the Tour Operators industry and there will be no procurement gains from a higher size standard in this industry for Federal agencies if this pattern continues.

To the extent that up to 238 additional firms could become active in Federal small business programs, this may entail some additional administrative costs to the Federal government associated with additional bidders for Federal small business procurement programs, additional firms seeking SBA guaranteed lending programs, and additional firms eligible for enrollment in SBA's PRO-Net data base program. Among businesses in this group seeking SBA assistance, there could be some additional costs associated with compliance and verification of small business status and protests of small business status. These costs are likely to generate minimal incremental administrative costs since administrative mechanisms are currently in place to handle these administrative requirements.

The costs to the Federal Government may be higher on some Federal contracts as a result of this rule. However, any analysis of costs is dependent on contracting in this industry and the last two fiscal years have had no federal contracting in this industry. SBA is assuming that this trend will continue and there will be no contracting activity in this industry in the near future.

SBA believes that there will be no distributional effects among large and small businesses, nor will there be any equity or uncertainty considerations as a result of this rule. With a small amount of lending to tour operators discussed above, it is unlikely that they would be denied SBA financial assistance due to a larger pool of eligible small businesses. Also, there is little or no Federal contracting in this industry to affect current businesses.

The revision to the current size standard for tour operators is consistent with SBA's statutory mandate to assist small business. This regulatory action promotes the Administration's objectives. One of SBA's goals in support of the Administration's objectives is to help individual small businesses succeed through fair and equitable access to capital and credit, Government contracts, and management and technical assistance. Reviewing and modifying size standards, when appropriate, ensures that intended beneficiaries have access to small business programs designed to assist them. Size standards do not interfere with State, local, and tribal governments in the exercise of their government functions. In a few cases, State and local governments have voluntarily adopted SBA's size standards for their programs to eliminate the need to establish an administrative mechanism to develop their own size standards.

Initial Regulatory Flexibility Analysis

Under the Regulatory Flexibility Act (RFA), this rule, if finalized, may have a significant impact on a substantial number of small entities engaged in the Tour Operators industry. As described in the Regulatory Impact Analysis, this rule may impact small entities seeking SBA (7a) Guaranteed Loans or Economic Impact Disaster Loans, but it is unlikely to affect SBA's procurement preference programs because of the absence of Federal contracting. Newly defined small businesses would benefit from the SBA's 7(a) Guaranteed Loan Program. SBA estimates that three additional loans totaling approximately $0.7 million in new Federal loan guarantees could be made to these newly defined small businesses. This represents 21 percent (the percentage increase in coverage of sales in the industry by firms under the higher ''real'' size standard) of the $3.7 million yearly average in loans that were guaranteed by the SBA in this industry under these two financial programs in FY 1999 and FY 2000. These additional loan guarantees, because of their limited magnitude, will have virtually no impact on the overall availability of loans for SBA's loan programs, which have averaged about 50,000 loans totaling more than $12 billion per year in recent years.

The size standard may also affect small businesses participating in programs of other agencies that use SBA size standards. As a practical matter, however, SBA cannot estimate the impact of a size standard change on each and every Federal program that uses its size standards. However, discussions with a major tour operators association indicated that there are no Federal laws or regulations using SBA's size standards for defining small tour operators. In cases where an SBA size standard is not appropriate, the Small Business Act and SBA's regulations allow Federal agencies to develop different size standards with the approval of the SBA Administrator (13 CFR 121.902). For purposes of a regulatory flexibility analysis, agencies must consult with SBA's Office of Advocacy when developing different size standards for their programs. (13 CFR 121.902(b)(4)).

Immediately below, SBA sets forth an initial regulatory flexibility analysis (IRFA) of this rule on the Tour Operators industry addressing the following questions: (1) What is the need for and objective of the rule, (2) what is SBA's description and estimate of the number of small entities to which the rule will apply, (3) what is the projected reporting, recordkeeping, and other compliance requirements of the rule, (4) what are the relevant Federal rules which may duplicate, overlap or conflict with the rule and (5) what alternatives will allow the Agency to accomplish its regulatory objectives while minimizing the impact on small entities?

(1) What Is the Need for and Objective of the Rule?

The revision to the size standard for tour operators to exclude third party reimbursements more accurately measures the magnitude of operations of a tour operator. SBA developed five criteria to assess whether businesses in an industry should be allowed to exclude funds held in trust for third parties. SBA found that tour operators act as agents for their clients by arranging travel and related activities provided by third parties. Well over a majority of a tour operator's receipts collected from clients are provided to third party providers. Therefore, a size standard allowing for the exclusion of third party reimbursements is a better measure of a tour operator's size than gross receipts.

(2) What Is SBA's Description and Estimate of the Number of Small Entities to Which the Rule Will Apply?

Within the Tour Operators industry, 2,722 businesses out of 3,222 (84.5 percent) are currently defined as small. Only a small proportion of businesses in this industry utilizes SBA programs, almost exclusively in the area of financial assistance. For FY 1999 and 2000, only 43 loans totaling $7.2 million were made under SBA's 7(a) Program. As a result of the terrorist attacks of September 11, SBA made 95 Economic Injury Disaster Loans totaling $8.6 million.

SBA estimates 238 additional tour operators would be considered small as a result of this rule based on the U.S. Census Bureau's special tabulation of the 1997 Economic Census for SBA's Office of Size Standards. These businesses would be eligible to seek available SBA assistance provided that they meet other program requirements. Firms becoming eligible for SBA assistance as a result of this rule cumulatively generate $600 million in this industry out of a total of $2.8 billion in annual receipts. The small business

coverage in this industry would increase by 21 percent of total industry receipts and by 7.2 percent of the total number of tour operators.

(3) What Are the Projected Reporting, Recordkeeping, and Other Compliance Requirements of the Rule and an Estimate of the Classes of Small Entities Which Will Be Subject to the Requirements?

A new size standard does not impose any additional reporting, recordkeeping or compliance requirements on small entities. Increasing size standards expands access to SBA programs that assist small businesses, but does not impose a regulatory burden as they neither regulate nor control business behavior.

(4) What Are the Relevant Federal Rules Which May Duplicate, Overlap or Conflict With the Rule?

This proposed rule overlaps other Federal rules that use SBA's size standards to define a small business. Under § 3(a)(2)(C) of the Small Business Act, 15 U.S.C. 632(a)(2)(c), unless specifically authorized by statute, Federal agencies must use SBA's size standards to define a small business. In 1995, SBA published in the **Federal Register** a list of statutory and regulatory size standards that identified the application of SBA's size standards as well as other size standards used by Federal agencies (60 FR 57988–57991, dated November 24, 1995). SBA is not aware of any Federal rule that would duplicate or conflict with establishing size standards. Furthermore, in discussions with a major tour operators association, it was not aware of any Federal laws or regulations using SBA's size standards for defining small tour operators.

(5) What Alternatives Will Allow the Agency To Accomplish Its Regulatory Objectives While Minimizing the Impact on Small Entities?

SBA considered two alternatives to the proposed rule. First, as discussed in the preamble, SBA considered as an alternative the $3 million size standard proposed for the Travel Agencies industry that SBA also measures on an adjusted receipts basis. However, an analysis of all of the size standards evaluation factors pointed to a size standard at the anchor size standard of $6 million. This analysis takes into consideration the characteristics of all tour operators and provides SBA with a range of sizes that identify the smaller segment of businesses in the industry. In light of the meager amount of financial assistance to currently defined small tour operators, a size standard higher than $3 million will not limit access to credit through SBA's financial programs for those tour operators.

Second, SBA considered retaining gross receipts to measure the size of a tour operator and adjusting the size standard to a higher level. While possible, SBA believed this action would harm small businesses. Under SBA's size regulations (13 CFR 121.104), gross receipts are taken from the Federal tax returns reported to the Internal Revenue Service (IRS). Many tour operators report gross receipts to the IRS. However, some report only commissions and fees. For this industry, two tour operators with the same amount of gross receipts could be treated differently for small business status due solely to how they report receipts on their Federal tax returns. To avoid this inequity, allowing exclusions for third party reimbursements will treat all tour operators in the same manner regardless of how they file their Federal tax returns.

SBA welcomes comments on other alternatives that minimize the impact of this rule on small businesses and achieve the objectives of this rule. Those comments should describe the alternative and explain why it is preferable to this proposed rule.

List of Subjects in 13 CFR Part 121

Administrative practice and procedure, Government procurement, Government property, Grant programs—business. Loan programs—business, Small businesses.

For the reasons set forth in the preamble, part 121 of title 13 of the Code of Federal Regulations is proposed to be amended as follows:

PART 121—SMALL BUSINESS SIZE REGULATIONS

1. The authority citation for part 121 continues to read as follows:

Authority: 15 U.S.C. 632(a), 634(b)(6), 637(a), 644(c) and 662(5) and Sec. 304, Pub. L. 103–403, 108 Stat. 4175, 4188.

2. In § 121.201, in the table under ''Small Business Size Standards by NAICS Industry,'' under the heading Subsector 561—Administrative and Support Services, revise the entry 561520 to read as follows:

§ 121.201 What size standards has SBA identified by North American Industry Classification System codes?

* * * * *

SMALL BUSINESS SIZE STANDARDS BY NAICS INDUSTRY

NAICS codes	NAICS industry descriptions	Size standards in number of employees or million of dollars
*	* * * * * *	
	Subsector 561—Administrative and Support Services	
*	* * * * * *	
561520	Tour Operators	[10] $6
*	* * * * * *	

* * * * *

3. In § 121.201, in the table under ''Small Business Size Standards by NAICS Industry,'' footnote 10 is revised to read as follows:

10. NAICS codes 488510 (part), 531210, 541810, 561510, 561520, and 561920—as measured by total revenues, but excluding funds received in trust for an unaffiliated third party, such as bookings or sales subject to

commissions. The commissions received are included as revenues.

Hector V. Barreto,

Administrator.

[FR Doc. 02–24919 Filed 10–1–02; 8:45 am]

BILLING CODE 8025–01–P

DEPARTMENT OF TRANSPORTATION

Federal Aviation Administration

14 CFR Part 25

[Docket No. FAA–2002–13438; Notice No. 02–15]

RIN 2120–AH40

Trim Systems and Protective Breathing Equipment

AGENCY: Federal Aviation Administration (FAA), DOT.

ACTION: Notice of proposed rulemaking.

SUMMARY: The Federal Aviation Administration proposes to amend the airworthiness standards for transport category airplanes concerning trim systems. For trim systems, the minimum design standard would be established. The FAA proposes to amend the airworthiness standards for transport category airplanes concerning protective breathing equipment (PBE). For PBE, the proposed standard would define design and installation requirements for portable and stationary protective breathing equipment. Adopting these proposals would eliminate regulatory differences between the airworthiness standards of the U.S. and the Joint Aviation Requirements of Europe, without affecting current industry design practices.

DATES: Send your comments on or before December 2, 2002.

ADDRESSES: Address your comments to Dockets Management System, U.S. Department of Transportation Dockets, Room Plaza 401, 400 Seventh Street SW., Washington, DC 20590–0001. You must identify the docket number FAA–2002–13438 at the beginning of your comments, and you should submit two copies of your comments. If you wish to receive confirmation that the FAA has received your comments, please include a self-addressed, stamped postcard on which the following statement is made: ''Comments to Docket No. ____.'' We will date-stamp the postcard and mail it back to you.

You also may submit comments electronically to the following Internet address: *http://dms.dot.gov.*

You may review the public docket containing comments to this proposed regulation at the Department of Transportation (DOT) Dockets Office, located on the plaza level of the Nassif Building at the above address. You may review the public docket in person at this address between 9 a.m. and 5 p.m., Monday through Friday, except Federal holidays. Also, you may review the public dockets on the Internet at *http://dms.dot.gov.*

FOR FURTHER INFORMATION CONTACT: Kenneth Frey, FAA, Systems and Equipment Branch, ANM–130S, Aircraft Certification Service, 1601 Lind Avenue SW., Renton, WA 98055–4056; telephone 425–227–2673; facsimile 425–227–1320, e-mail *kenneth.frey@faa.gov,* or

Kathi Ishimaru, FAA, Propulsion/Mechanical Systems Branch, ANM–112, Transport Airplane Directorate, Aircraft Certification Service, 1601 Lind Avenue SW., Renton, WA 98055–4056; telephone 425–227–2674; facsimile 425–227–1320, e-mail *kathi.ishimaru@faa.gov.*

SUPPLEMENTARY INFORMATION:

How Do I Submit Comments to This NPRM?

Interested persons are invited to participate in the making of the proposed action by submitting such written data, views, or arguments, as they may desire. Comments relating to the environmental, energy, federalism, or economic impact that might result from adopting the proposals in this document are also invited. Substantive comments should be accompanied by cost estimates. Comments must identify the regulatory docket number and be submitted in duplicate to the DOT Rules Docket address specified above.

All comments received, as well as a report summarizing each substantive public contact with FAA personnel concerning this proposed rulemaking, will be filed in the docket. The docket is available for public inspection before and after the comment closing date.

We will consider all comments received on or before the closing date before taking action on this proposed rulemaking. Comments filed late will be considered as far as possible without incurring expense or delay. The proposals in this document may be changed in light of the comments received.

How Can I Obtain a Copy of This NPRM?

You may download an electronic copy of this document using a modem and suitable communications software from the FAA regulations section of the Fedworld electronic bulletin board service (telephone: 703–321–3339); the Government Printing Office's (GPO) electronic bulletin board service (telephone: 202–512–1661); or, if applicable, the FAA's Aviation Rulemaking Advisory Committee bulletin board service (telephone: 800–322–2722 or 202–267–5948).

Internet users may access recently published rulemaking documents at the FAA's web page at *http://faa.gov/avr/arm/index.cfm* or the *GPO's* web page at *http://www.gpo.gov/su_docs/aces/aces140.html.*

You may obtain a copy of this document by submitting a request to the Federal Aviation Administration, Office of Rulemaking, ARM–1, 800 Independence Avenue, SW., Washington, DC 20591; or by calling 202–267–9680. Communications must identify the docket number of this NPRM.

Any person interested in being placed on the mailing list for future rulemaking documents should request from the above office a copy of Advisory Circular 11–2A, ''Notice of Proposed Rulemaking Distribution System,'' which describes the application procedure.

Background

What Are the Relevant Airworthiness Standards in the United States?

In the United States, the airworthiness standards for type certification of transport category airplanes are contained in Title 14, Code of Federal Regulations (CFR) part 25. Manufacturers of transport category airplanes must show that each airplane they produce of a different type design complies with the appropriate part 25 standards. These standards apply to:

- Airplanes manufactured within the U.S. for use by U.S.-registered operators, and
- Airplanes manufactured in other countries and imported to the U.S. under a bilateral airworthiness agreement.

What Are the Relevant Airworthiness Standards in Europe?

In Europe, the airworthiness standards for type certification of transport category airplanes are contained in Joint Aviation Requirements (JAR)–25, which are based on part 25. These were developed by the Joint Aviation Authorities (JAA) of Europe to provide a common set of airworthiness standards within the European aviation community. Twenty-three European countries accept airplanes type certificated to the JAR–25 standards, including airplanes manufactured in the U.S. that are type

certificated to JAR–25 standards for export to Europe.

What Is ''Harmonization'' and How Did It Start?

Although part 25 and JAR–25 are very similar, they are not identical in every respect. When airplanes are type certificated to both sets of standards, the differences between part 25 and JAR–25 can result in substantial additional costs to manufacturers and operators. These additional costs, however, frequently do not bring about an increase in safety. In many cases, part 25 and JAR–25 may contain different requirements to accomplish the same safety intent. Consequently, manufacturers are usually burdened with meeting the requirements of both sets of standards, although the level of safety is not increased correspondingly.

Recognizing that a common set of standards would not only benefit the aviation industry economically, but also maintain the necessary high level of safety, the FAA and the JAA began an effort in 1988 to ''harmonize'' their respective aviation standards. The goal of the harmonization effort is to ensure that:

- Where possible, standards do not require domestic and foreign parties to manufacture or operate to different standards for each country involved; and
- The standards adopted are mutually acceptable to the FAA and the foreign aviation authorities.

The FAA and JAA have identified a number of significant regulatory differences (SRD) between the wording of part 25 and JAR–25. Both the FAA and the JAA consider ''harmonization'' of the two sets of standards a high priority.

What Is ARAC and What Role Does It Play in Harmonization?

After initiating the first steps towards harmonization, the FAA and JAA soon realized that traditional methods of rulemaking and accommodating different administrative procedures was neither sufficient nor adequate to make appreciable progress towards fulfilling the goal of harmonization. The FAA then identified the Aviation Rulemaking Advisory Committee (ARAC) as an ideal vehicle for assisting in resolving harmonization issues, and, in 1992, the FAA tasked ARAC to undertake the entire harmonization effort.

The FAA had formally established ARAC in 1991 (56 FR 2190, January 22, 1991), to provide advice and recommendations concerning the full range of the FAA's safety-related rulemaking activity. The FAA sought this advice to develop better rules in less overall time and using fewer FAA resources than previously needed. The committee provides the FAA firsthand information and insight from interested parties regarding potential new rules or revisions of existing rules.

There are 64 member organizations on the committee, representing a wide range of interests within the aviation community. Meetings of the committee are open to the public, except as authorized by section 10(d) of the Federal Advisory Committee Act.

The ARAC establishes working groups to develop recommendations for resolving specific airworthiness issues. Tasks assigned to working groups are published in the **Federal Register**. Although working group meetings are not generally open to the public, the FAA solicits participation in working groups from interested members of the public who possess knowledge or experience in the task areas. Working groups report directly to the ARAC, and the ARAC must accept a working group proposal before ARAC presents the proposal to the FAA as an advisory committee recommendation.

The activities of the ARAC will not, however, circumvent the public rulemaking procedures; nor is the FAA limited to the rule language ''recommended'' by ARAC. If the FAA accepts an ARAC recommendation, the agency proceeds with the normal public rulemaking procedures. Any ARAC participation in a rulemaking package is fully disclosed in the public docket.

Under this program, the FAA provides ARAC with an opportunity to review, discuss, and comment on the FAA's draft NPRM. In the case of this rulemaking, ARAC recommended a number of editorial changes to the NPRM for §§ 25.677(b) and 25.1439 with which we agree, and one change to NPRM § 25.1439 with which we disagree. The ARAC recommended change and the FAA reason for disagreeing are described below in the Discussion of the Proposal.

Discussion of the Proposal

What Is the Underlying Safety Issue Addressed by the Current Standards?

- For § 25.677(b)

This requirement for § 25.677(b) establishes the minimum design standard for trim indication systems. The intent of this standard is to provide the flightcrew with accurate direction and position indication in relation to the airplane motion when the trim system is in operation.

- For § 25.1439

For § 25.1439, smoke, excessive carbon dioxide, or toxic gases on the flight deck can inhibit or prevent the flightcrew from performing their duties, which can lead to unsafe conditions. Also, the unavailability of sufficient fire fighting equipment on the flight deck or in accessible compartments can lead to unsafe conditions. Part 25 and the JAR define design and installation requirements for portable and stationary protective breathing equipment to ensure safe operation if a fire or adverse environment develops.

What Are the Current 14 CFR and JAR Standards?

- *The current text of 14 CFR 25.677(b) is:*

(b) There must be means adjacent to the trim control to indicate the direction of the control movement relative to the airplane motion. In addition, there must be clearly visible means to indicate the position of the trim device with respect to the range of adjustment.

- *The current text of JAR–25.677(b) (Change 15) is:*

(b) There must be means adjacent to the trim control to indicate the direction of the control movement relative to the aeroplane motion. In addition, there must be clearly visible means to indicate the position of the trim device with respect to the range of adjustment. The indicator must be clearly marked with the range within which it has been demonstrated that take-off is safe for all centre of gravity position approved for take-off.

- *The current text of 14 CFR 25.1439 is:* Section 25.1439 Protective Breathing Equipment.

(a) If there is a class A, B, or E cargo compartment, protective breathing equipment must be installed for the use of appropriate crewmembers. In addition, protective breathing equipment must be installed in each isolated separate compartment in the airplane, including upper and lower lobe galleys, in which crewmember occupancy is permitted during flight for the maximum number of crewmembers expected to be in the area during any operation.

(b) For protective breathing equipment required by paragraph (a) of this section or by any operating rule of this chapter, the following apply:

(1) The equipment must be designed to protect the flight crew from smoke, carbon dioxide, and other harmful gases while on flight deck duty and while combating fires in cargo compartments

(2) The equipment must include—

(i) Masks covering the eyes, nose, and mouth; or

(ii) Masks covering the nose and mouth, plus accessory equipment to cover the eyes.

(3) The equipment, while in use, must allow the flight crew to use the radio equipment and to communicate with each other, while at their assigned duty stations.

(4) The part of the equipment protecting the eyes may not cause any appreciable adverse effect on vision and must allow corrective glasses to be worn.

(5) The equipment must supply protective oxygen of 15 minutes duration per crewmember at a pressure altitude of 8,000 feet with a respiratory minute volume of 30 liters per minute BTPD. If a demand oxygen system is used, a supply of 300 liters of free oxygen at 70°F. and 760mm Hg. pressure is considered to be of 15-minute duration at the prescribed altitude and minute volume. If a continuous flow protective breathing system is used (including a mask with a standard rebreather bag) a flow rate of 60 liters per minute at 8,000 feet (45 liters per minute at sea level) and a supply of 600 liters of free oxygen at 70° F. and 760 mm. Hg. pressure is considered to be of 15-minute duration at the prescribed altitude and minute volume. BTPD refers to body temperature conditions (that is, 37° C., at ambient pressure, dry).

(6) The equipment must meet the requirements of paragraphs (b) and (c) of § 25.1441.

• *The current text of JAR 25.1439 (Change 15) is:* JAR 25.1439 Protective Breathing Equipment.

(a) Protective breathing equipment must be installed for use of appropriate crew members. Such equipment must be located so as to be available for use in compartments accessible in flight.

(b) For protective breathing equipment required by JAR 25.1439 (a) or by the National Operating Regulations, the following apply:

(1) The equipment must be designed to protect the appropriate crew member from smoke, carbon dioxide, and other harmful gases while on flight deck duty or while combating fires.

(2) The equipment must include—

(i) Masks covering the eyes, nose and mouth, or

(ii) Masks covering the nose and mouth, plus accessory equipment to cover the eyes.

(3) Equipment, including portable equipment, while in use must allow communication with other crew members. Equipment available at flight crew assigned duty stations must enable the flight crew to use radio equipment.

(4) The part of the equipment protecting the eyes may not cause any appreciable adverse effect on vision and must allow corrective glasses to be worn.

(5) Each dispensing equipment must supply protective oxygen of 15 minutes duration at a pressure altitude of 8000 feet with a respiratory minute volume of 30 liters per minute BTPD. The equipment and system must be designed to prevent any leakage to the inside of the mask and any significant increase in the oxygen content of the local ambient atmosphere. (See ACJ 25.1439 (b)(5).)

(6) The equipment must meet the requirements of JAR 25.1441.

What Are the Differences in the Standards and What Do Those Differences Result In?

• For § 25.677(b)

The JAR imposes one additional requirement not found in part 25. The JAR adds a requirement to clearly mark a range on the trim indication system where take-off is safe for all center of gravity positions.

• For § 25.1439

Paragraph (a): Section 25.1439 requires Protective Breathing Equipment (PBE) if there is a class A, B, or E cargo compartment. It also requires PBE in each isolated separate compartment where crewmember occupancy is permitted during flight for the maximum number of crewmembers expected to occupy that area during any operation. JAR 25.1439 requires PBE to be available for use in any compartment that is accessible in flight, regardless of compartment classification, or isolation.

Paragraph (b): Section 25.1439 and the JAR are essentially the same, with both regulations referring to paragraph (a) and the operating regulations.

Paragraph (b)(1): Section 25.1439 specifies that the equipment must be designed to protect the flightcrew while on duty and while combating fires in cargo compartments. The JAR specifies protection for the appropriate crewmember (not just flightcrew) and does not limit the fire combating to cargo compartments.

Paragraph (b)(2): There are no differences between the regulations.

Paragraph (b)(3): Section 25.1439 and the JAR list essentially the same requirements for communication to other crewmembers and allowing use of radio equipment. The only difference is that the JAR clarifies that the standard applies to both stationary and portable equipment.

Paragraph (b)(4): There are no differences between the regulations.

Paragraph (b)(5): Both part 25 and the JAR state that the equipment must supply protective oxygen of 15-minute duration per crewmember at a pressure of 8,000 feet with a respiratory minute volume of 30 liters per minute BTPD (body temperature). Part 25 includes interpretive material for a 15-minute duration using demand or continuous flow systems, and defines BTPD. The JAR refers to ACJ 25.1439(b)(5) for the interpretive material, which describes the 15-minute duration using a demand system.

• The current text of ACJ 25.1439(b)(5) is: ACJ 25.1439(b)(5) Protective Breathing Equipment (Interpretative Material And Acceptable Means Of Compliance) See JAR 25.1439(b)(5)

1. If a demand system is used, a supply of 300 litres of free oxygen at 70° and 760 mm Hg pressure is considered to be of 15 minutes duration at the prescribed altitude and minute volume. (Interpretative Material.)

2. Any other system such as a continuous flow system is acceptable provided that it does not result in any significant increase in the oxygen content of the local ambient atmosphere above that which would result from the use of a demand oxygen system. (Interpretative Material.)

3. A system with safety over-pressure would be an acceptable means of preventing leakage. (Acceptable Means of Compliance.)

4. A continuous flow system of the closed circuit rebreather type is an acceptable system (Acceptable Means of Compliance.).

The JAR includes additional design requirements to prevent internal leakage and to prevent increased oxygen content of the local atmosphere due to external leakage.

Paragraph (b)(6): The JAR specifies that the equipment must meet all paragraphs of § 25.1441 (not just (b) and (c) as in part 25).

Note: § 25.1441 and JAR 25.1441 are not identical, but are essentially the same.

What, If Any, Are the Differences in the Means of Compliance?

• For § 25.677(b)

The JAR means of compliance requires the applicant to mark safe take-off limits on the trim indication system. Currently, part 25 does not have this requirement.

• For § 25.1439

There is no difference in the means of compliance for the stationary type of PBE. All aircraft are equipped with a demand oxygen system for the flightcrew, consisting of a high pressure gaseous oxygen supply (minimum of 300 liters of free oxygen per person), pressure/flow regulation, distribution tubing, and masks (or mask and goggle combination if separate) that meet TSO–C99 and JTSO–C99.

The means of compliance for the quantity and location of portable type PBE is slightly different. The JAA certified aircraft have at least one PBE installed in/near the flight deck and in/near each compartment accessible in flight. Some, but not all, FAA certified aircraft have portable PBE installed on the flight deck. The FAA certified aircraft have PBE installed in/near each class A, B, and E cargo compartments (as defined by § 25.857). Also, PBE is installed in/near each isolated separate compartment for the maximum number of crewmembers expected to be in the area. These compartments include, but are not limited to, upper and lower lobe galleys. The JAA certified aircraft may not be equipped with as many PBE as there may be crewmembers in isolated compartments.

Of course those compartments or areas with special conditions against them are not discussed in this proposal. The requirements and means of compliance are documented separately.

What Is the Proposed Action?

• For § 25.677(b)

The proposed action would adopt the more stringent JAR requirement, which adds the requirement to mark the safe take-off limits on the trim indication system.

• For § 25.1439

The proposed action is to merge the requirements of both part 25 and JAR standards, and to develop a baseline set of standards and an acceptable means of compliance that would satisfy all authorities. The merged standard would combine the requirements of § 25.1439 and JAR 25.1439 into one harmonized standard and eliminate the need for ACJ 25.1439(b)(5). The harmonization would be accomplished by enveloping (taking the most stringent requirement of) the two standards and adding some of the interpretive material from the ACJ. The result would be a common standard that is easy to understand.

The ARAC working group comments that a small part 25 airplane with a Class A baggage compartment is not required to have a PBE installed. The FAA does not agree. If a small part 25 airplane is equipped with a Class A baggage compartment, then part 25 requires installation of a PBE, even if part 91 does not require the PBE.

How Does This Proposed Standard Address the Underlying Safety Issue?

• For § 25.677(b)

The proposed change to § 25.677(b) would be an additional requirement to mark the safe take-off limits on the trim system. The adoption of this change would be a new minimum design standard for trim systems.

• For § 25.1439

The proposed regulation clearly defines design and compliance criteria for stationary and portable protective breathing equipment in one harmonized standard. It incorporates the more stringent portions of the existing part 25 and JAR requirements.

What Is the Effect of the Proposed Standard Relative to the Current Regulations?

• For § 25.677(b)

The proposed standard would increase the level of safety by adding a new requirement to § 25.677 to mark safe take-off limits on the trim indication system.

• For § 25.1439

This standard has been changed to include the more stringent requirements of § 25.1439 and JAR 25.1439. Paragraph (a) of the existing JAR requires protective breathing equipment to be installed for fire fighting use in all compartments accessible in flight, not just specific cargo compartments. Paragraph (a) of the existing § 25.1439 requires portable protective breathing equipment for each crewmember in isolated compartments; the JAR requires the equipment for use of the appropriate crewmembers. Paragraphs (b)(5) and (b)(6) of the existing JAR 25.1439 are more stringent than the existing § 25.1439. The JAR paragraphs include additional leakage and design requirements above the existing § 25.1439.

The proposed standard may increase the safety of aircraft only certified to part 25 or the JAR's. For some configurations, the revised part 25 regulation would require additional portable PBE to be installed by the airframe Original Equipment Manufacturers (OEMs). Most operating standards, such as § 121.337 and JAR–OPS 1.780, require additional portable PBE above what is required for type-design certification. Some operating standards, such as 14 CFR part 91, may not require as many portable PBE as § 25.1439 and JAR 25.1439. An increase in safety would come from the situation where the airplane's applicable operational requirements are the same as, or less than, the current § 25.1439. An increase in safety would also exist if an airplane is only certificated to JAR–25 and does not have PBE equal to the number of crewmembers expected to be in the isolated compartments.

What Is the Effect of the Proposed Standard Relative to Current Industry Practice?

• For § 25.677(b)

The proposed standard would maintain the same level of safety as current industry practice. Most airplanes certified under current requirements already mark safe take-off limits on trim indication systems to show compliance to JAR 25.677.

• For § 25.1439

The current industry practice is to install PBE in accordance with the more stringent requirements of § 25.1439 or JAR 25.1439, depending on which certification standards are being used, and the applicable operational standards. Airlines and OEMs typically configure the aircraft at the time of design with more PBE than is required by either § 25.1439 or JAR 25.1439, to facilitate approval for operation under applicable operating rules. The proposed revision to the standard would maintain the same level of safety if the airplane's operational requirements require more portable PBE than part 25 and JAR–25. If the airplane's operational requirements are less stringent than § 25.1439, then the proposed standard would increase the level of safety for aircraft only certified to part 25. The proposed standard would increase the level of safety for aircraft that are only certified to JAR–25 if the airplane is not equipped with enough PBE for the maximum number of crewmembers expected to be in isolated compartments.

What Other Options Have Been Considered and Why Were They Not Selected?

• For § 25.677(b)

No other option was considered because this would be a simple change to the current standard. The change will harmonize § 25.677 to JAR 25.677.

• For § 25.1439

Enveloping (taking the most stringent requirement of each) § 25.1439, JAR 25.1439, § 121.337, and JAR–OPS 1.780 into one harmonized § 25.1439 and JAR 25.1439 was considered. This option was not selected since it would include some operational requirements and would likely drive changes to § 121.337 and JAR–OPS 1.780. Changes to these requirements would take considerable effort and would be beyond the scope of the ARAC tasking statement.

Who Would Be Affected by the Proposed Change?

• For § 25.677(b)

This change would affect new type certificate applicants.

• For § 25.1439

Airlines typically purchase portable PBE and flightcrew masks and provide them to the airframe OEMs for installation. The proposed change to the standard would require additional portable PBE to be installed on some aircraft. Additional units would increase the airlines' procurement costs and the airplane manufacturer's installation cost.

Is Existing FAA Advisory Material Adequate?

• For 21 25.677(b)

There is no advisory material for this rule and no advisory material is proposed.

• For § 25.1439

No advisory material would be needed. The text of the proposed standard incorporates the interpretive material (paragraphs 1 and 2) and the acceptable means of compliance (paragraph 4) of ACJ 25.1439(b)(5). The remainder of ACJ 25.1439(b)(5) would be eliminated.

What Regulatory Analyses and Assessments Has the FAA Conducted?

Regulatory Evaluation Summary

Proposed changes to Federal regulations must undergo several economic analyses. First, Executive Order 12866 directs that each Federal agency shall propose or adopt a regulation only upon a reasoned determination that the benefits of the intended regulation justify its costs. Second, the Regulatory Flexibility Act of 1980 requires agencies to analyze the economic effect of regulatory changes on small entities. Third, the Trade Agreements Act prohibits agencies from setting standards that create unnecessary obstacles to the foreign commerce of the United States. In developing U.S. standards, this Trade Agreements Act also requires the consideration of international standards and, where appropriate, that they be the basis of U.S. standards. And fourth, the Unfunded Mandates Reform Act of 1995 requires agencies to prepare a written assessment of the costs, benefits, and other effects of proposed or final rules that include a Federal mandate likely to result in the expenditure by State, local, or tribal governments, in the aggregate, or by the private sector of $100 million or more annually (adjusted for inflation).

In conducting these analyses, the FAA has determined that this proposal has benefits, but minimal costs, and that it is not ''a significant regulatory action'' as defined in the Executive Order 12866 nor ''significant'' as defined in DOT's Regulatory Policies and Procedures. Further, this proposed rule would not have a significant economic impact on a substantial number of small entities, would reduce barriers to international trade, and would not impose an Unfunded Mandate on state, local, or tribal governments, or on the private sector.

Because there are minimal costs associated with this proposed rule, it does not warrant the preparation of a full economic evaluation for placement in the docket. The DOT Order 2100.5 prescribes policies and procedures for simplication, analysis, and review of regulations. If it is determined that the expected impact is so minimal that the proposed rule does not warrant a full evaluation, a statement to that effect and the basis for it is included in the proposed regulation. Accordingly, because the OEMs are already meeting the higher standard, the FAA has determined that the expected impact of this proposed rule is so minimal that the proposed rule does not warrant a full evaluation below.

A review of current manufacturers of transport category aircraft certificated under part 25 has revealed that all such future aircraft are expected to be certificated under both 14 CFR part 25 and JAR–25. Since future certificated transport category aircraft are expected to meet the existing JAR requirement and these proposed rules simply adopts the same JAR requirement, manufacturers would incur minimal costs resulting from this proposal.

• For § 25.677(b)

This proposal would harmonize part 25 to the JAR by adding an additional requirement to § 25.677(b). The new § 25.677(b) would require a clearly visible means to indicate the position of the trim device with respect to the range of adjustment. The ARAC working group states the proposed change will not increase manufacturing or operating costs and current industry practice already mark safe take-off limits on trim indication systems to show compliance to JAR 25.677(b) on most airplanes certified under § 25.677(b).

• For § 25.1439

This proposal would combine the requirements of § 25.1439 and JAR 25.1439, and the advisory material for paragraph 25.1439(b)(5) of the JAR into one rule. This rule would apply to the design and installation of stationary and portable protective breathing equipment. The FAA has concluded that, for the reasons previously discussed in the preamble, the adoption of this harmonized standard into the JAR and 14 CFR part 25 is the most efficient way to harmonize these sections.

The FAA estimates that there are minimal costs associated with this proposal. A review of current manufacturers of transport category aircraft certificated under part 25 has revealed that all such future aircraft are expected to be certificated under part 25 of both 14 CFR and the JAR. Since future certificated transport category aircraft are expected to meet the existing requirements of 14 CFR § 25.1439 and section 25.1439 of the JAR, and this rule simply adopts the more stringent requirements of each section, manufacturers would incur minimal costs resulting from this proposal. In fact, manufacturers are expected to receive cost-savings by a reduction in the FAA/JAA certification requirements for new aircraft. Most operating rules, such as § 121.337 require additional portable PBE above what is required for type-design certification. In addition, most airlines and OEMs typically configure the airplane, at the time of design, with more PBE than is required by § 25.1439. The current industry practice is to install PBE in accordance with the more stringent requirements of both JAR–25 and part 25 and the applicable operational rules.

• For §§ 25.677(b) and 25.1439

Manufacturers are expected to receive certification cost-savings with a single FAA/JAA certification requirement for new aircraft. The FAA, however, has not attempted to quantify the cost savings for this specific proposal, beyond noting that, while they may be minimal, they contribute to a large potential harmonization savings.

The agency concludes that, since there is consensus among potentially affected airplane manufacturers that the benefits of harmonization exceed the cost, further analysis is not required.

The FAA requests comments with supporting documentation in regard to the conclusions contained in this section.

Initial Regulatory Flexibility Determination

The Regulatory Flexibility Act (RFA) of 1980, 5 U.S.C. 601–612, as amended, establishes ''as a principle of regulatory issuance that agencies shall endeavor, consistent with the objective of the rule and of applicable statutes, to fit regulatory and informational requirements to the scale of the business, organizations, and governmental jurisdictions subject to regulation.'' To achieve that principle, the RFA requires agencies to solicit and consider flexible regulatory proposals

and to explain the rationale for their actions.

Agencies must perform a review to determine whether a proposed or final rule will have a significant impact on a substantial number of small entities. If the determination is that the rule will, the Agency must prepare a regulatory flexibility analysis as described in the RFA.

However, if an agency determines that a proposed or final rule is not expected to have a significant economic impact on a substantial number of small entities, section 605(b) of the RFA provides that the head of the agency may so certify and a regulatory flexibility analysis is not required. The certification must include a statement providing the factual basis for this determination, and the reasoning should be clear.

The FAA considers that this proposed rule would not have a significant impact on a substantial number of small entities for two reasons:

First, the net effect of the proposed rule is minimum regulatory cost relief. The proposed rule would require that new transport category aircraft manufacturers meet just the ''more stringent'' European certification requirement, rather than both the United States and European standards. Airplane manufacturers already meet or expect to meet this standard as well as the existing 14 CFR part 25 requirement.

Second, all U.S. transport-aircraft category manufacturers exceed the Small Business Administration small-entity criteria of 1,500 employees for aircraft manufacturers. The current U.S. part 25 airplane manufacturers include: Boeing, Cessna Aircraft, Gulfstream Aerospace, Learjet (owned by Bombardier), Lockheed Martin, McDonnell Douglas (a wholly-owned subsidiary of The Boeing Company), Raytheon Aircraft, and Sabreliner Corporation.

Given that this proposed rule is minimally cost-relieving and that there are no small entity manufacturers of part 25 airplanes, the FAA certifies that this proposed rule would not have a significant impact on a substantial number of small entities.

International Trade Impact Assessment

The Trade Agreement Act of 1979, 19 U.S.C. *et seq.*, prohibits Federal agencies from engaging in any standards or related activities that create unnecessary obstacles to the foreign commerce of the United States. Legitimate domestic objectives, such as safety, are not considered unnecessary obstacles. The statute also requires consideration of international standards and, where appropriate, that they be the basis for U.S. standards.

In accordance with the above statute, the FAA has assessed the potential effect of the proposed rule and has determined that it is consistent with the statutes requirements by using European international standards as the basis for U.S. standards.

Unfunded Mandates Reform Act

Title II of the Unfunded Mandates Reform Act of 1995 (the Act), codified in 2 U.S.C. 1532–1538, 1571, enacted as Public Law 104–4 on March 22, 1995, requires each Federal agency, to the extent permitted by law, to prepare a written assessment of the effects of any Federal mandate in a proposed or final agency rule that may result in the expenditure by State, local, and tribal governments, in the aggregate, or by the private sector, of $100 million or more (adjusted annually for inflation) in any one year. This proposed rule does not contain a Federal intergovernmental or private sector mandate that exceeds $100 million in any year; therefore, the requirements of the Act do not apply.

What Other Assessments Has the FAA Conducted?

Executive Order 13132, Federalism

The FAA has analyzed this proposed rule and the principles and criteria of Executive Order 13132, Federalism. The FAA has determined that this action would not have a substantial direct effect on the States, on the relationship between the national Government and the States, or on the distribution of power and responsibilities among the various levels of government. Therefore, the FAA has determined that this notice of proposed rulemaking would not have federalism implications.

Paperwork Reduction Act

The Paperwork Reduction Act of 1995 (44 U.S.C. 3507(d)) requires that the FAA consider the impact of paperwork and other information collection burdens imposed on the public. We have determined that there are no new information collection requirements associated with this proposed rule.

International Compatibility

In keeping with U.S. obligations under the Convention on International Civil Aviation, it is FAA policy to comply with International Civil Aviation Organization (ICAO) Standards and Recommended Practices to the maximum extent practicable. The FAA determined that there are no ICAO Standards and Recommended Practices that correspond to this proposed regulation.

Environmental Analysis

FAA Order 1050.1D defines FAA actions that may be categorically excluded from preparation of a National Environmental Policy Act (NEPA) environmental impact statement. In accordance with FAA Order 1050.1D, appendix 4, paragraph 4(j), this proposed rulemaking action qualifies for a categorical exclusion.

Energy Impact

The energy impact of the proposed rule has been assessed in accordance with the Energy Policy and Conservation Act (EPCA) and Public Law 94–163, as amended (43 U.S.C. 6362), and FAA Order 1053.1. It has been determined that it is not a major regulatory action under the provisions of the EPCA.

Regulations Affecting Intrastate Aviation in Alaska

Section 1205 of the FAA Reauthorization Act of 1996 (110 Stat. 3213) requires the Administrator, when modifying regulations in Title 14 of the CFR in a manner affecting intrastate aviation in Alaska, to consider the extent to which Alaska is not served by transportation modes other than aviation, and to establish such regulatory distinctions as he or she considers appropriate. Because this proposed rule would apply to the certification of future designs of transport category airplanes and their subsequent operation, it could, if adopted, affect intrastate aviation in Alaska. The FAA therefore specifically requests comments on whether there is justification for applying the proposed rule differently to intrastate operations in Alaska.

Plain Language

In response to the June 1, 1998, Presidential memorandum regarding the issue of plain language, the FAA re-examined the writing style currently used in the development of regulations. The memorandum requires Federal agencies to communicate clearly with the public. We are interested in your comments on whether the style of this document is clear, and in any other suggestions you might have to improve the clarity of FAA communications that affect you. You can get more information about the Presidential memorandum and the plain language initiative at *http://www.plainlanguage.gov.*

List of Subjects in 14 CFR Part 25

Aircraft, Aviation safety, Reporting and record keeping requirements, Safety, Transportation.

The Proposed Amendment

In consideration of the foregoing, the Federal Aviation Administration proposes to amend part 25 of Title 14, Code of Federal Regulations, as follows:

PART 25—AIRWORTHINESS STANDARDS: TRANSPORT CATEGORY AIRPLANES

1. The authority citation for part 25 continues to read as follows:

Authority: 49 U.S.C. 106(g), 40113, 44701, 44702 and 44704.

2. Amend § 25.677 by revising paragraph (b) to read as follows:

§ 25.677 Trim systems.

* * * * *

(b) There must be means adjacent to the trim control to indicate the direction of the control movement relative to the airplane motion. In addition, there must be clearly visible means to indicate the position of the trim device with respect to the range of adjustment. The indicator must be clearly marked with the range within which it has been demonstrated that take-off is safe for all center of gravity positions approved for take-off.

* * * * *

3. Revise § 25.1439 to read as follows:

§ 25.1439 Protective breathing equipment.

(a) Fixed (stationary, or built in) protective breathing equipment must be installed for the use of the flightcrew, and at least one portable protective breathing equipment shall be located at or near the flight deck for use by a flight crewmember. In addition, portable protective breathing equipment must be installed for the use of appropriate crewmembers for fighting fires in compartments accessible in flight. This includes isolated compartments and upper and lower lobe galleys, in which crewmember occupancy is permitted during flight. Equipment must be installed for the maximum number of crewmembers expected to be in the area during any operation.

(b) For protective breathing equipment required by paragraph (a) of this section or by the applicable Operating Regulations:

(1) The equipment must be designed to protect the appropriate crewmember from smoke, carbon dioxide, and other harmful gases while on flight deck duty or while combating fires.

(2) The equipment must include—

(i) Masks covering the eyes, nose and mouth, or

(ii) Masks covering the nose and mouth, plus accessory equipment to cover the eyes.

(3) Equipment, including portable equipment, must allow communication with other crewmembers while in use. Equipment available at flightcrew assigned duty stations must also enable the flightcrew to use radio equipment.

(4) The part of the equipment protecting the eyes shall not cause any appreciable adverse effect on vision and must allow corrective glasses to be worn.

(5) The equipment must supply protective oxygen of 15 minutes duration per crewmember at a pressure altitude of 8,000 feet with a respiratory minute volume of 30 liters per minute BTPD. The equipment and system must be designed to prevent any inward leakage to the inside of the device and prevent any outward leakage causing significant increase in the oxygen content of the local ambient atmosphere. If a demand oxygen system is used, a supply of 300 liters of free oxygen at 70° F. and 760mm Hg. pressure is considered to be of 15-minute duration at the prescribed altitude and minute volume. If a continuous flow protective breathing system is used (including a closed circuit rebreather type system) a flow rate of 60 liters per minute at 8,000 feet (45 liters per minute at sea level) and a supply of 600 liters of free oxygen at 70° F. and 760 mm. Hg. pressure is considered to be of 15-minute duration at the prescribed altitude and minute volume. Continuous flow systems must not increase the ambient oxygen content of the local atmosphere above that of demand systems. BTPD refers to body temperature conditions (that is, 37° C., at ambient pressure, dry).

(6) The equipment must meet the requirements of § 25.1441.

Issued in Renton, Washington, on August 26, 2002.

Ali Bahrami,

Acting Manager, Transport Airplane Directorate, Aircraft Certification Service.

[FR Doc. 02–25055 Filed 10–1–02; 8:45 am]

BILLING CODE 4910–13–P

DEPARTMENT OF TRANSPORTATION

Federal Aviation Administration

14 CFR Part 39

[Docket No. 2000–SW–38–AD]

RIN 2120–AA64

Airworthiness Directives; Marathon Power Technologies Company

AGENCY: Federal Aviation Administration, DOT.

ACTION: Proposed rule; withdrawal.

SUMMARY: This action withdraws a notice of proposed rulemaking (NPRM) that proposed a new airworthiness directive (AD) for Marathon Power Technologies Company (Marathon) batteries. That action would have required visually inspecting screws installed on Marathon batteries and replacing certain unairworthy screws. Since issuing the NPRM, the FAA has reconsidered the proposal and determined that an AD is not the appropriate avenue for addressing individual cases of improper maintenance or lack of maintenance that prompted the proposal. Accordingly, the proposed rule is withdrawn.

FOR FURTHER INFORMATION CONTACT: Sung-Hui Cavazos, Aviation Safety Engineer, FAA, Special Certification Office, Fort Worth, TX 76193–0190; telephone (817) 222–5142, fax (817) 222–5785.

SUPPLEMENTARY INFORMATION: A proposal to amend 14 CFR part 39 to add a new AD for Marathon batteries was published in the **Federal Register** on February 14, 2001 (66 FR 10241). The proposed rule would have required visually inspecting each #10–32 screw in certain Marathon batteries within 12 months or the next scheduled battery maintenance and, before further flight, replacing any unairworthy screw with an airworthy screw, part number 10488–020. That action was prompted by an explosion of a G.E./Saft battery due to failure of an unairworthy screw. The proposed actions were intended to prevent an explosion of a battery, structural damage, and subsequent loss of power to the electrical systems.

Since issuing that NPRM, the FAA has concluded that the explosion of the G.E./Saft battery and the other batteries that contained the unairworthy screws that prompted the proposal resulted from individual cases of improper maintenance or lack of maintenance due to failure to follow normal maintenance practices on a product.

Upon further consideration, the FAA has determined that the issue of the unairworthy screws is limited in scope and may be more effectively addressed as improper maintenance procedures. Accordingly, the proposed rule is hereby withdrawn.

Withdrawal of this NPRM constitutes only such action and does not preclude the agency from issuing another notice in the future, nor does it commit the agency to any course of action in the future.

Since this action only withdraws an NPRM, it is neither a proposed nor a final rule and therefore, is not covered under Executive Order 12866, Executive

Order 13132, the Regulatory Flexibility Act, or DOT Regulatory Policies and Procedures (44 FR 11034, February 26, 1979).

List of Subjects in 14 CFR Part 39

Air transportation, Aircraft, Aviation safety, Safety.

The Withdrawal

Accordingly, the notice of proposed rulemaking, Docket No. 2000–SW–38–AD, published in the **Federal Register** on February 14, 2001 (66 FR 10241), is withdrawn.

Issued in Fort Worth, Texas, on September 19, 2002.

Eric D. Bries,

Acting Manager, Rotorcraft Directorate, Aircraft Certification Service.

[FR Doc. 02–24990 Filed 10–1–02; 8:45 am]

BILLING CODE 4910–13–P

DEPARTMENT OF TRANSPORTATION

Federal Aviation Administration

14 CFR Part 39

[Docket No. 2001–SW–61–AD]

RIN 2120–AA64

Airworthiness Directives; Eurocopter France Model AS 365 N3 and EC 155B Helicopters

AGENCY: Federal Aviation Administration, DOT.

ACTION: Notice of proposed rulemaking (NPRM).

SUMMARY: This document proposes adopting a new airworthiness directive (AD) for the specified Eurocopter France (Eurocopter) helicopters. This proposal would revise the Airworthiness Limitations section of the maintenance manuals by establishing a new service life limit for the Fenestron pitch change control rod (control rod). This proposal is prompted by a failure of a control rod on a prototype helicopter that led to a precautionary landing. The actions specified by this proposed AD are intended to prevent failure of the control rod, loss of control of the tail rotor, and subsequent loss of control of the helicopter.

DATES: Comments must be received on or before December 2, 2002.

ADDRESSES: Submit comments in triplicate to the Federal Aviation Administration (FAA), Office of the Regional Counsel, Southwest Region, Attention: Rules Docket No. 2001–SW–61–AD, 2601 Meacham Blvd., Room 663, Fort Worth, Texas 76137. You may also send comments electronically to the Rules Docket at the following address: *9-asw-adcomments@faa.gov.* Comments may be inspected at the Office of the Regional Counsel between 9 a.m. and 3 p.m., Monday through Friday, except Federal holidays.

FOR FURTHER INFORMATION CONTACT: Jim Grigg, Aviation Safety Engineer, FAA, Rotorcraft Directorate, Rotorcraft Standards Staff, Fort Worth, Texas 76193–0110, telephone (817) 222–5490, fax (817) 222–5961.

SUPPLEMENTARY INFORMATION:

Comments Invited

Interested persons are invited to participate in the making of the proposed rule by submitting such written data, views, or arguments as they may desire. Communications should identify the Rules Docket number and be submitted in triplicate to the address specified above. All communications received on or before the closing date for comments will be considered before taking action on the proposed rule. The proposals contained in this document may be changed in light of the comments received.

Comments are specifically invited on the overall regulatory, economic, environmental, and energy aspects of the proposed rule. All comments submitted will be available, both before and after the closing date for comments, in the Rules Docket for examination by interested persons. A report summarizing each FAA-public contact concerned with the substance of this proposal will be filed in the Rules Docket.

Commenters wishing the FAA to acknowledge receipt of their mailed comments submitted in response to this proposal must submit a self-addressed, stamped postcard on which the following statement is made: ''Comments to Docket No. 2001-SW–61-AD.'' The postcard will be date stamped and returned to the commenter.

Discussion

The Direction Generale De L'Aviation Civile (DGAC), the airworthiness authority for France, notified the FAA that an unsafe condition may exist on Eurocopter Model AS 365 N and Model EC 155B helicopters. The DGAC advises that a control rod failure occurred on a prototype aircraft and mandates removing control rod, part number (P/N) 365A33616121, at certain times depending on the number of helicopter flight hours.

Eurocopter has issued Alert Telex No. 04A003, for Model EC 155B helicopters, and Alert Telex No. 01.00.54, for Model AS 365 N3 helicopters, both dated September 5, 2001. The alert telexes specify a new service life of 300 flight hours for control rod, P/N 365A33616121. The DGAC classified these alert telexes as mandatory and issued AD No. 2001–443–054(A), for Model AS 365 N3 helicopters, and AD No. 2001–444–003(A), for Model EC 155B helicopters. Both AD's are dated October 17, 2001 and were issued to ensure the continued airworthiness of these helicopters in France.

These helicopter models are manufactured in France and are type certificated for operation in the United States under the provisions of 14 CFR 21.29 and the applicable bilateral agreement. Pursuant to the applicable bilateral agreement, the DGAC has kept the FAA informed of the situation described above. The FAA has examined the findings of the DGAC, reviewed all available information, and determined that AD action is necessary for products of these type designs that are certificated for operation in the United States.

This unsafe condition is likely to exist or develop on other helicopters of these same type designs registered in the United States. Therefore, the proposed AD would reduce the current service life limit of 1,500 hours time in service (TIS) to 300 hours TIS for the control rod, part number 365A33616121, and would require removing the control rod:

- Before further flight for helicopters with control rods having 700 or more hours TIS;
- Within 20 hours TIS for helicopters with control rods having 500 or more hours TIS, but less than 700 hours TIS; and
- Within 30 hours TIS for helicopters with control rods having more than 270 hours TIS and less than 500 hours TIS.

The proposed AD would require revising the Airworthiness Limitations section of the maintenance manuals to reflect the new retirement life of 300 hours TIS for the control rod. The actions would be required to be accomplished in accordance with the alert telexes described previously.

The FAA estimates that 2 helicopters of U.S. registry would be affected by this proposed AD, that it would take approximately 0.5 work hour per helicopter to accomplish the proposed actions, and that the average labor rate is $60 per work hour. Based on these figures, the total cost impact of the proposed AD on U.S. operators is estimated to be $60, assuming no control rods will reach the 300 hours TIS retirement life within the next year.

The regulations proposed herein would not have a substantial direct effect on the States, on the relationship

between the national Government and the States, or on the distribution of power and responsibilities among the various levels of government. Therefore, it is determined that this proposal would not have federalism implications under Executive Order 13132.

For the reasons discussed above, I certify that this proposed regulation (1) is not a ''significant regulatory action'' under Executive Order 12866; (2) is not a ''significant rule'' under the DOT Regulatory Policies and Procedures (44 FR 11034, February 26, 1979); and (3) if promulgated, will not have a significant economic impact, positive or negative, on a substantial number of small entities under the criteria of the Regulatory Flexibility Act. A copy of the draft regulatory evaluation prepared for this action is contained in the Rules Docket. A copy of it may be obtained by contacting the Rules Docket at the location provided under the caption **ADDRESSES.**

List of Subjects in 14 CFR Part 39

Air transportation, Aircraft, Aviation safety, Safety.

The Proposed Amendment

Accordingly, pursuant to the authority delegated to me by the Administrator, the Federal Aviation Administration proposes to amend part 39 of the Federal Aviation Regulations (14 CFR part 39) as follows:

PART 39—AIRWORTHINESS DIRECTIVES

1. The authority citation for part 39 continues to read as follows:

Authority: 49 U.S.C. 106(g), 40113, 44701.

§ 39.13 [Amended]

2. Section 39.13 is amended by adding a new airworthiness directive to read as follows:

Eurocopter France: Docket No. 2001–SW–61–AD.

Applicability: Model AS 365 N3 with MOD 0764B39 (Quiet Fenestron) and Model EC 155B helicopters with tail rotor pitch change control rod, part number (P/N) 365A33616121, installed, certificated in any category.

Note 1: This AD applies to each helicopter identified in the preceding applicability provision, regardless of whether it has been otherwise modified, altered, or repaired in the area subject to the requirements of this AD. For helicopters that have been modified, altered, or repaired so that the performance of the requirements of this AD is affected, the owner/operator must request approval for an alternative method of compliance in accordance with paragraph (c) of this AD. The request should include an assessment of the effect of the modification, alteration, or repair on the unsafe condition addressed by this AD; and if the unsafe condition has not been eliminated, the request should include specific proposed actions to address it.

Compliance: Required as indicated, unless accomplished previously.

To prevent failure of the Fenestron pitch change control rod (control rod), loss of control of the tail rotor, and subsequent loss of control of the helicopter, accomplish the following:

(a) Remove the control rod from service in accordance with Eurocopter Alert Telex No. 04A003, for Model EC 155B helicopters, and Alert Telex No. 01.00.54, for Model AS 365 N3 helicopters, both dated September 5, 2001, using the following table for the initial compliance time, and thereafter at intervals not to exceed 300 hours time-in-service (TIS):

Remove the control rod	For control rods with
Before further flight	700 or more hours TIS.
Within 20 hours TIS	500 or more hours TIS but less than 700 hours TIS.
Within 30 hours TIS	More than 270 hours TIS and less than 500 hours TIS.

(b) This AD revises the helicopter Airworthiness Limitations section of the maintenance manuals by establishing a new retirement life for control rod, P/N 365A33616121, of 300 hours TIS.

(c) An alternative method of compliance or adjustment of the compliance time that provides an acceptable level of safety may be used if approved by the Manager, Regulations Group, Rotorcraft Directorate, FAA. Operators shall submit their requests through an FAA Principal Maintenance Inspector, who may concur or comment and then send it to the Manager, Regulations Group.

Note 2: Information concerning the existence of approved alternative methods of compliance with this AD, if any, may be obtained from the Regulations Group.

(d) Special flight permits may be issued in accordance with 14 CFR 21.197 and 21.199 to operate the helicopter to a location where the requirements of this AD can be accomplished.

Note 3: The subject of this AD is addressed in Direction Generale De L'Aviation Civile (France) AD No. 2001–443–054(A), for Model AS 365 N3 helicopters, and AD No. 2001–444–003(A), for Model EC 155B helicopters. Both AD's are dated October 17, 2001.

Issued in Fort Worth, Texas, on September 18, 2002.

Eric Bries,

Acting Manager, Rotorcraft Directorate, Aircraft Certification Service.

[FR Doc. 02–24989 Filed 10–1–02; 8:45 am]

BILLING CODE 4910–13–P

ENVIRONMENTAL PROTECTION AGENCY

40 CFR Part 300

[FRL–7384–1]

National Oil and Hazardous Substance Pollution Contingency Plan; National Priorities List

AGENCY: Environmental Protection Agency.

ACTION: Notice of intent to delete a portion of the Department of Energy (DOE) Mound Superfund Site from the National Priorities List.

SUMMARY: The Environmental Protection Agency, (EPA) Region V is issuing a notice of intent to delete Parcel 4 from the Department of Energy (DOE) Mound Superfund Site (Mound Site) located in Miamisburg, Ohio, from the National Priorities List (NPL) and requests public comments on this notice of intent to delete. Parcel 4 is located on the southern border of the operational area of the Mound Superfund Site. The NPL, promulgated pursuant to section 105 of the Comprehensive Environmental Response, Compensation, and Liability Act (CERCLA) of 1980, as amended, is found at Appendix B of 40 CFR part 300, which is the National Oil and Hazardous Substances Pollution Contingency Plan (NCP). The EPA and the State of Ohio, through the Ohio Environmental Protection Agency, have determined that the DOE has implemented all appropriate response actions required with respect to Parcel 4. However, this deletion does not preclude future actions under Superfund or relieve DOE of their Long-Stewardship or Operation and Maintenance responsibilities. In the ''Rules and Regulations'' Section of today's **Federal Register**, we are publishing a direct final notice of deletion of Parcel 4 of the Mound Superfund Site without prior notice of intent to delete because we view this as a non-controversial revision and anticipate no adverse comment. We have explained our reasons for this

deletion in the preamble to the direct final notice of deletion. If we receive no adverse comment(s) on the direct final notice of deletion, we will not take further action. If we receive timely adverse comment(s), we will withdraw the direct final notice of deletion and it will not take effect. We will, as appropriate, address all public comments in a subsequent final deletion notice based on adverse comments received on this notice of intent to delete. We will not institute a second comment period on this notice of intent to delete. Any parties interested in commenting must do so at this time. For additional information, see the direct final notice of deletion which is located in the Rules section of this **Federal Register**.

DATES: Comments concerning this Site must be received by November 1, 2002.

ADDRESSES: Written comments should be addressed to: Stuart Hill, Community Involvement Coordinator, U.S. EPA (P–19J), 77 W. Jackson, Chicago, IL 60604, 312–886–0689 or 1–800–621–8431.

FOR FURTHER INFORMATION CONTACT: Timothy Fischer, Remedial Project Manager at (312) 886–5787, or Gladys Beard, State NPL Deletion Process Manager at (312) 886–7253 or 1–800–621–8431, Superfund Division, U.S. EPA (SR–6J), 77 W. Jackson, IL 60604.

SUPPLEMENTARY INFORMATION: For additional information, see the Direct Final Notice of Deletion which is located in the Rules section of this **Federal Register**.

Information Repositories: Repositories have been established to provide detailed information concerning this decision at the following address: EPA Region V Library, 77 W. Jackson, Chicago, IL 60604, (312) 353–5821, Monday through Friday 8 a.m. to 4 p.m.; The CERCLA Public Reading Room, Miamisburg Senior Adult Center, 305 Central Avenue, Miamisburg, OH 45342, (937) 866–8999, Monday and Wednesday 12 p.m. to 8 p.m., Tuesday 8:30 a.m. to 1 p.m. and 4 p.m. to 8 p.m., Thursday 8:30 a.m. to 1 p.m. and Friday 10:30 a.m. to 4:30 p.m.

List of Subjects in 40 CFR Part 300

Environmental protection, Air pollution control, Chemicals, Hazardous waste, Hazardous substances, Intergovernmental relations, Penalties, Reporting and recordkeeping requirements, Superfund, Water pollution control, Water supply.

Authority: 33 U.S.C. 1321(c)(2); 42 U.S.C. 9601–9657; E.O. 12777, 56 FR 54757, 3 CFR, 1991 Comp., p. 351; E.O. 12580, 52 FR 2923; 3 CFR, 1987 Comp., p. 193.

Dated: September 17, 2002.

Norman Niedergang,

Acting Regional Administrator, EPA Region V.

[FR Doc. 02–24642 Filed 10–1–02; 8:45 am]

BILLING CODE 6560–50–P

FEDERAL COMMUNICATIONS COMMISSION

47 CFR Part 73

[DA 02–2066; MB Docket No. 02–255; RM–10524]

Radio Broadcasting Services; Cottage Grove, Depoe Bay, Garibaldi, Toledo, and Veneta, Oregon

AGENCY: Federal Communications Commission.

ACTION: Proposed rule; correction.

SUMMARY: This document corrects the amendatory language to a proposed rule published in the **Federal Register** of September 12, 2002, regarding Radio Broadcasting Services in Cottage Grove, Depoe Bay, Garibaldi, Toledo, and Veneta, Oregon. The amendatory language stated the wrong channel number for the community of Garibaldi. This document corrects the channel number for the community of Garibaldi.

FOR FURTHER INFORMATION CONTACT: Victoria M. McCauley, Media Bureau, (202) 418–2180.

Correction

In proposed rule FR Doc. 02–23139, published September 12, 2002 (67 FR 57781) make the following correction.

On page 57781, in the third column of § 73.202(b), correct the amendatory language to read as follows:

2.Section 73.202(b), the Table of FM Allotments under Oregon, is amended by removing Channel 288C3 and adding Channel 264C2 at Depoe Bay, by removing Channel 288A at Cottage Grove, by removing Toledo, Channel 264C2, by adding Garibaldi, Channel 288A, and by adding Veneta, Channel 288C3.

Federal Communications Commission.

John A. Karousos,

Assistant Chief, Audio Division, Media Bureau.

[FR Doc. 02–25073 Filed 10–1–02; 8:45 am]

BILLING CODE 6712–01–P

DEPARTMENT OF THE INTERIOR

Fish and Wildlife Service

50 CFR Part 17

RIN 1018–AH70

Endangered and Threatened Wildlife and Plants; Designating Critical Habitat for Plant Species from the Islands of Maui and Kahoolawe, HI

AGENCY: Fish and Wildlife Service, Interior.

ACTION: Proposed rule; reopening and extension of comment period and notice of availability of draft economic analysis.

SUMMARY: We, the U.S. Fish and Wildlife Service, announce the availability of the draft economic analysis for the proposed designations of critical habitat for plant species from the islands of Maui and Kahoolawe, Hawaii. In earlier **Federal Register** notices published August 26, 2002, we reopened the comment period and provided notice of a public hearing (67 FR 54764 and 67 FR 54766) for the proposed designations or non-designations of critical habitat for these plants. We are now providing notice of extending the comment period to allow peer reviewers and all interested parties to comment simultaneously on the proposed rule and the associated draft economic analysis. Comments previously submitted need not be resubmitted as they will be incorporated into the public record as part of this extended comment period and will be fully considered in preparation of the final rule.

DATES: We will accept public comments until November 1, 2002.

ADDRESSES: Written comments and information should be submitted to Field Supervisor, U.S. Fish and Wildlife Service, Pacific Islands Office, 300 Ala Moana Blvd., P.O. Box 50088, Honolulu, HI 96850–0001. For further instructions on commenting, refer to Public Comments Solicited section of this notice.

FOR FURTHER INFORMATION CONTACT: Paul Henson, Field Supervisor, Pacific Islands Office, at the above address (telephone: 808/541–3441; facsimile: 808/541–3470).

SUPPLEMENTARY INFORMATION:

Background

Seventy plant species reported from the islands of Maui and Kahoolawe were listed as threatened or endangered under the Endangered Species Act of 1973, as amended (Act), between 1991

and 1999 (56 FR 1450, 56 FR 47686, 56 FR 55770, 57 FR 20589, 57 FR 20772, 57 FR 46325, 59 FR 9304, 59 FR 10305, 59 FR 14482, 59 FR 32932, 59 FR 49025, 59 FR 49860, 59 FR 56333, 59 FR 62346, 61 FR 53108 and 64 FR 48307). Seventeen of these species are endemic to the islands of Maui and/or Kahoolawe, while 53 species are reported from one or more other islands, as well as Maui and/or Kahoolawe.

In other published proposals (65 FR 7919), we proposed that critical habitat was prudent for 37 plants from the islands of Maui and Kahoolawe. In a November 7, 2000 (65 FR 66808), we proposed that critical habitat was prudent for 11 plants that are reported from Maui and Kahoolawe as well as from Kauai and Niihau. In addition, at the time we listed *Clermontia samuelii, Cyanea copelandii* ssp. *haleakalaensis, Cyanea glabra, Cyanea hamatiflora* ssp. *hamatiflora, Dubautia plantaginea* ssp. *humilis*, and *Kanaloa kahoolawensis*, on September 3, 1999 (64 FR 48307), we determined that designation of critical habitat was prudent for these six taxa from Maui and Kahoolawe. No change is made to these 54 prudency determinations in this revised proposal, and they are hereby incorporated by reference (64 FR 48307; 65 FR 66808; 65 FR 79192).

In the December 18, 2000, proposed rule, we determined that critical habitat was not prudent for *Acaena exigua,* a species known only from Kauai and Maui, because it had not been seen recently in the wild, and no viable genetic material of this species was known to exist. No change is made here to the December 18, 2000, prudency determination for this species and it is hereby incorporated by reference (65 FR 79192).

We propose critical habitat designations for 61 species within 13 critical habitat units totaling approximately 51,208 hectares (ha) (126,531 acres (ac)) on the island of Maui, and within 2 critical habitat units totaling approximately 714 ha (18,972 ac) on the island of Kahoolawe (67 FR 15856).

Critical habitat receives protection from destruction or adverse modification through required consultation under section 7 of the Act (16 U.S.C. 1531 *et seq.*) with regard to actions carried out, funded, or authorized by a Federal agency. Section 4(b)(2) of the Act requires that the Secretary shall designate or revise critical habitat based upon the best scientific and commercial data available, and after taking into consideration the economic impact of specifying any particular area as critical habitat. We have prepared a draft economic analysis of the proposed critical habitat designation. The draft economic analysis is available on the Internet and from the mailing address in the Public Comments Solicited section below.

The public comment period for the April 3, 2002, proposal originally closed on June 3, 2002 (67 FR 15856). On August 26, 2002, we published a **Federal Register** notice (67 FR 54766) of the reopening of the comment period for the proposed designations and non-designations of critical habitat for plant species on the islands of Maui and Kahoolawe, as well as for the proposed designations and non-designations of critical habitat for plant species on the islands of Kauai, Niihau, Molokai, Maui, Kahoolawe, Hawaii, and Oahu; and we announced that the comment period would close on September 30, 2002. On August 26, 2002, we also published a **Federal Register** notice (67 FR 54764) that announced the reopening of the comment period and gave notice of a public hearing for the proposed designations and non-designations of critical habitat for plant species on the islands of Maui and Kahoolawe. The public hearing was held on September 12, 2002, on the island of Maui. We are now announcing the availability of the draft economic analysis and the extension of the comment period for the proposed designations and non-designations of critical habitat for plant species on the islands of Maui and Kahoolawe. We will accept public comments on the proposal and the associated draft economic analysis for the islands of Maui and Kahoolawe until November 1, 2002. The extension of the comment period gives all interested parties the opportunity to comment on the proposal and the associated draft economic analysis for the islands of Maui and Kahoolawe. Comments already submitted on the proposed designations and non-designations of critical habitat for plant species from the islands of Maui and Kahoolawe need not be resubmitted as they will be fully considered in the final determinations.

Public Comments Solicited

We will accept written comments and information during this re-opened comment period. If you wish to comment, you may submit your comments and materials concerning this proposal by any of several methods:

(1) You may submit written comments and information to the Field Supervisor, U.S. Fish and Wildlife Service, Pacific Islands Office, 300 Ala Moana Blvd., P.O. Box 50088, Honolulu, HI 96850–0001.

(2) You may send comments by electronic mail (e-mail) to: Maui_crithab@r1.fws.gov. If you submit comments by e-mail, please submit them as an ASCII file and avoid the use of special characters and any form of encryption. Please also include ''Attn: RIN 1018—AH70'' and your name and return address in your e-mail message. If you do not receive a confirmation from the system that we have received your e-mail message, contact us directly by calling our Honolulu Fish and Wildlife Office at telephone number 808/541–3441.

(3) You may hand-deliver comments to our Honolulu Fish and Wildlife Office at the address given above.

Comments and materials received, as well as supporting documentation used in preparation of the proposal to designate critical habitat, will be available for inspection, by appointment, during normal business hours at the address under (1) above. Copies of the draft economic analysis are available on the Internet at *http://pacificislands.fws.gov* or by request from the Field Supervisor at the address and phone number under (1 and 2) above.

Author(s)

The primary author of this notice is John Nuss, U.S. Fish and Wildlife Service, Regional Office, 911 NE 11th Avenue, 4th Floor, Portland, OR 97232–4181.

Authority

The authority for this action is the Endangered Species Act of 1973 (16 U.S.C. 1531 *et seq.*).

Dated: September 25, 2002.

Paul Hoffman,

Acting Assistant Secretary for Fish and Wildlife and Parks.

[FR Doc. 02–25039 Filed 10–1–02; 8:45 am]

BILLING CODE 4310–55–P

Notices

Federal Register

Vol. 67, No. 191

Wednesday, October 2, 2002

This section of the FEDERAL REGISTER contains documents other than rules or proposed rules that are applicable to the public. Notices of hearings and investigations, committee meetings, agency decisions and rulings, delegations of authority, filing of petitions and applications and agency statements of organization and functions are examples of documents appearing in this section.

DEPARTMENT OF AGRICULTURE

Food Safety and Inspection Service

[Docket No. 02–035N]

Codex Alimentarius: Meeting of the Codex Committee on FoodImport and Export Inspection and Certification Systems

AGENCY: Food Safety and Inspection Service, USDA.

ACTION: Notice of public meetings, request for comments.

SUMMARY: The Office of the Under Secretary for Food Safety, United States Department of Agriculture, and the U.S. Department of Health and Human Services, Food and Drug Administration (FDA) are sponsoring two public meetings. The first meeting will be held on October 22, 2002, 1 p.m. to 4 p.m. to review agenda items and receive comments in preparation for developing draft U.S. positions, and the second will be held on November 20, 2002, 1 p.m. to 3 p.m. to provide information and receive public comments on the U.S. draft positions for agenda items that will be discussed at the Codex Committee on Food Import and Export Inspection and Certification Systems (CCFICS) which will be held in Adelaide, Australia, December 2–6, 2002. The Under Secretary and FDA recognize the importance of providing interested parties with information on the Eleventh Session of CCFICS and to address items on the Agenda.

DATES: The public meetings are scheduled for Tuesday, October 22, 2002 from 1 p.m. to 4 p.m. and Wednesday, November 20, 2002 from 1 p.m. to 3 p.m.

ADDRESSES: The public meetings will be held in the Auditorium of the Harvey E. Wiley Federal Building, 5100 Paint Branch Pkwy, College Park, MD (green line College Park Metro stop).

To receive copies of the documents referenced in the notice contact the FSIS Docket Clerk, U.S. Department of Agriculture, Food Safety and Inspection Service, Room 102, Cotton Annex, 300 12th Street, SW., Washington, DC 20250–3700. The documents will also become accessible via the World Wide Web at the following address: *http://codexalimentarius.net/current.asp.*

If you have comments, please send an original and two copies to the FSIS Docket Clerk and reference Docket # 02–035N. All comments submitted will be available for public inspection in the Docket Clerk's Office, between 8:30 a.m. and 4:30 p.m., Monday through Friday.

FOR FURTHER INFORMATION CONTACT: Dr. William James, Acting Director, U.S. Codex Office, Food Safety and Inspection Service, Room 4861, South Building, 1400 Independence Avenue, SW., Washington, DC 20250, Phone: (202) 205–7760, Fax: (202) 720–3157.

SUPPLEMENTARY INFORMATION:

Background

The Codex Alimentarius Commission was established in 1962 by two United Nations organizations, the Food and Agriculture Organization (FAO) and the World Health Organization (WHO). Codex is the major international organization for encouraging fair international trade in food and protecting the health and economic interests of consumers. Through adoption of food standards, codes of practice, and other guidelines developed by its committees, and by promoting their adoption and implementation by governments, Codex seeks to ensure that the world's food supply is sound, wholesome, free from adulteration, and correctly labeled. In the United States, USDA, FDA, and the Environmental Protection Agency manage and carry out U.S. Codex.

The Codex Committee on Food Import and Export Inspection and Certification Systems was established to develop principles and guidelines for food import and export inspection and certification systems to facilitate trade through harmonization and to supply safe and quality foods to consumers. Included in the charge to the Committee is application of measures by competent authorities to provide assurances that foods comply with essential requirements. Recognition of quality assurance systems through the development of guidelines will help ensure that foods conform to the essential requirements. The Government of Australia is hosting this activity.

Issues To Be Discussed at the Public Meetings

The following issues will be discussed during the public meetings:

- Proposed Draft Guidelines on the Judgement of Equivalence of Sanitary Measures Associated with Food Inspection and Certification Systems.
- Proposed Draft Guidelines for the Exchange of Information of Food Control Emergency Situations.
- Proposed Draft Guidelines for the Utilization and Promotion of Quality Assurance Systems to meet Requirements in Relation to Food.
- Traceability in the Context of Food Import and Export Inspection and Certification Systems.

Additional Public Notification

Public awareness of all segments of rulemaking and policy development is important. Consequently, in an effort to better ensure that minorities, women, and persons with disabilities are aware of this notice, FSIS will announce it and make copies of this **Federal Register** publication available through the FSIS Constituent Update. FSIS provides a weekly Constituent Update, which is communicated via Listserv, a free e-mail subscription service. In addition, the update is available on-line through the FSIS web page located at *http://www.fsis.usda.gov.* The update is used to provide information regarding FSIS policies, procedures, regulations, **Federal Register** notices, FSIS public meetings, recalls, and any other types of information that could affect or would be of interest to our constituents/stakeholders. The constituent Listserv consists of industry, trade, and farm groups, consumer interest groups, allied health professionals, scientific professionals, and other individuals that have requested to be included. Through the Listserv and web page, FSIS is able to provide information to a much broader, more diverse audience.

For more information contact the Congressional and Public Affairs Office, at (202) 720–9113. To be added to the free e-mail subscription service (Listserv) go to the ''Constituent Update'' page on the FSIS web site at *http://www.fsis.usda.gov/oa/update/update.htm.* Click on the ''Subscribe to

the Constituent Update Listserv'' link, then fill out and submit the form.

Done at Washington, DC on September 26, 2002.

Edward Scarbrough,

U.S. Manager for Codex Alimentarius.

[FR Doc. 02–24978 Filed 10–1–02; 8:45 am]

BILLING CODE 3410–DM–P

DEPARTMENT OF AGRICULTURE

Forest Service

Meeting of the Land Between The Lakes Advisory Board

AGENCY: Forest Service, USDA.

ACTION: Notice of meeting.

SUMMARY: The Land Between The Lakes Advisory Board will hold a meeting on Thursday, October 24, 2002. Notice of this meeting is given under the Federal Advisory Committee Act, 5 U.S.C. App. 2.

The meeting agenda includes the following:

(1) Welcome/Introductions/Agenda

(2) Update on ''Respect the Resources'' Program

(3) School Groups and Other Environmental Education Happenings

(4) Discussion of Comments Received

(5) Land & Resource Management Planning: Milestones of Phase I

(6) Upcoming Speaking Engagements

(7) Focus Groups

The meeting is open to the public. Written comments are invited and may be mailed to: William P. Lisowsky, Area Supervisor, Land Between The Lakes, 100 Van Morgan Drive, Golden Pond, Kentucky 42211. Written comments must be received at Land Between The Lakes by October 17, 2002, in order for copies to be provided to the members at the meeting. Board members will review written comments received, and at their request, oral clarification may be requested at a future meeting.

DATES: The meeting will be held on Thursday, October 24, 2002, 9 a.m. to 3:30 p.m., CDT.

ADDRESSES: The meeting will be held at Kentucky Dam Village State Resort Park, Gilbertsville, Kentucky, and will be open to the public.

FOR FURTHER INFORMATION CONTACT: Sharon Byers, Advisory Board Liaison, Land Between The Lakes, 100 Van Morgan Drive, Golden Pond, Kentucky 42211, 270–924–2002.

SUPPLEMENTARY INFORMATION: None.

Dated: September 25, 2002.

William P. Lisowsky,

Area Supervisor, Land Between The Lakes.

[FR Doc. 02–24987 Filed 10–1–02; 8:45 am]

BILLING CODE 3410–11–P

DEPARTMENT OF AGRICULTURE

Natural Resources Conservation Service

Notice of Proposed Changes in the National Handbook of Conservation Practices

AGENCY: Natural Resources Conservation Service, USDA.

ACTION: Notice and request for comments.

SUMMARY: Notice is hereby given of the intention of the Natural Resources Conservation Service (NRCS) to issue a series of new or revised conservation practice standards in its National Handbook of Conservation Practices. These standards include: Animal Mortality Facility; Aquaculture Ponds; Bedding; Contour Orchard and Other Fruit Areas; Fence; Grazing Land Mechanical Treatment; Irrigation Canal or Lateral; Irrigation Field Ditch; Irrigation System, Sprinkler; Irrigation System, Surface, and Subsurface; Irrigation Water Conveyance, Ditch and Canal Lining, Plain Concrete; Irrigation Water Conveyance, Ditch and Canal Lining, Galvanized Steel; Mole Drain; Range Planting; and Surface Drainage, Field Ditch. These standards are used to convey national guidance in developing Field Office Technical Guide Standards used in the States and the Pacific Basin and Caribbean Areas. NRCS State Conservationists and Directors for the Pacific Basin and Caribbean Areas who choose to adopt these practices for use within their States/Areas will incorporate them into Section IV of their Field Office Technical Guide. These practices may be used in resource management systems that treat highly erodible land, or on land determined to be wetland.

EFFECTIVE DATES: Comments will be received on or before November 1, 2002. This series of new or revised conservation practice standards will be adopted after the close of the 30-day period.

FOR FURTHER INFORMATION CONTACT: Single copies of these standards are available from NRCS–CED in Washington, DC. Submit individual inquiries and return any comments in writing to William Hughey, National Agricultural Engineer, Natural Resources Conservation Service, Post Office Box 2890, Room 6139–S, Washington, DC. 20013–2890. The telephone number is (202) 720–5023. The standards are also available, and can be downloaded from the Internet at: *http://www.ftw.nrcs.usda.gov/practice_stds.html.*

SUPPLEMENTARY INFORMATION: Section 343 of the Federal Agriculture Improvement and Reform Act of 1996 requires NRCS to make available, for public review and comment, proposed revisions to conservation practice standards used to carry out the highly erodible land and wetland provisions of the law. For the next 30 days, NRCS will receive comments on the proposed changes. Following that period, a determination will be made by NRCS regarding disposition of those comments, and a final determination of change will be made.

Signed in Washington, DC, on September 20, 2002.

Bruce I. Knight,

Chief, Natural Resources Conservation Service.

[FR Doc. 02–24963 Filed 10–1–02; 8:45 am]

BILLING CODE 3410–16–P

BROADCASTING BOARD OF GOVERNORS

Sunshine Act Meeting

DATE AND TIME: October 8, 2002; 11:15 a.m.–12:15 p.m.

PLACE: Museum of Television and Radio, 465 N. Beverly Dr., Beverly Hills, CA 90210.

CLOSED MEETING: The members of the Broadcasting Board of Governors (BBG) will meet in closed session to review and discuss a number of issues relating to U.S. Government-funded non-military international broadcasting. They will address internal procedural, budgetary, and personnel issues, as well as sensitive foreign policy issues relating to potential options in the U.S. international broadcasting field. This meeting is closed because if open it likely would either disclose matters that would be properly classified to be kept secret in the interest of foreign policy under the appropriate executive order (5 U.S.C. 552b(c)(1)) or would disclose information the premature disclosure of which would be likely to significantly frustrate implementation of a proposed agency action. (5 U.S.C. 552b(c)(9)(B)) In addition, part of the discussion will relate solely to the internal personnel and organizational issues of the BBG or the International Broadcasting Bureau. (5 U.S.C. 552b(c)(2) and (6))

CONTACT PERSON FOR MORE INFORMATION: Persons interested in obtaining more information should contact either Brenda Hardnett or Carol Booker at (202) 401–3736.

Dated: September 30, 2002.

Carol Booker,

Legal Counsel.

[FR Doc. 02–25222 Filed 9–30–02; 3:55 pm]

BILLING CODE 8230–01–M

DEPARTMENT OF COMMERCE

Foreign-Trade Zones Board

[Docket 37–2002]

Foreign-Trade Zone 1—New York; Application for Subzone, Bulova Corporation (Watches and Clocks), New York, NY

An application has been submitted to the Foreign-Trade Zones Board (the Board) by the City of New York, grantee of FTZ 1, requesting special-purpose subzone status for the warehousing and distribution facilities of Bulova Corporation, located in Woodside and Brooklyn, New York. The application was submitted pursuant to the provisions of the Foreign-Trade Zones Act, as amended (19 U.S.C. 81a-81u), and the regulations of the Board (15 CFR part 400). It was formally filed on September 23, 2002.

Bulova's facility is comprised of two sites. *Site 1* (77,439 sq. ft., 319 employees) is located at 26–15 Brooklyn Queens Expressway, Woodside, New York; and *Site 2* (87,000 sq. ft., 31 employees) is located at 77 Commercial Street in Brooklyn, New York.

The facilities repair, warehouse and distribute watch and clock products and parts. The products are distributed in the U.S. and worldwide. (About 12 percent are exported.) No authority is being sought for activity conducted under FTZ procedures that would result in a change in tariff classification.

Zone procedures would exempt Bulova from Customs duty payments on foreign products that are reexported. On its domestic sales, the company would be able to defer duty payments until merchandise is shipped from the facilities. The application indicates that the savings from zone procedures would help improve the facilities' international competitiveness.

In accordance with the Board's regulations, a member of the FTZ staff has been designated examiner to investigate the application and report to the Board.

Public comment is invited from interested parties. Submissions (original and 3 copies) shall be addressed to the Board's Executive Secretary at one of the following addresses:

1. *Submission Via Express/Package Delivery Services:* Foreign-Trade Zones Board, U.S. Department of Commerce, Franklin Court Building—Suite 4100W, 1099 14th St., NW, Washington, DC. 20005; or

2. *Submissions Via the U.S. Postage Service:* Foreign-Trade Zones Board, U.S. Department of Commerce, FCB—Suite 4100W, 1401 Constitution Ave. NW, Washington, DC 20230.

The closing period for their receipt is December 2, 2002. Rebuttal comments in response to material submitted during the foregoing period may be submitted during the subsequent 15-day period (to December 16, 2002).

A copy of the application and accompanying exhibits will be available for public inspection at the Office of the Foreign-Trade Zones Board's Executive Secretary at address Number 1 listed above, and the U.S. Department of Commerce Export Assistance Center, 20 Exchange Place, 40th Floor, New York, New York 10005.

Dated: September 24, 2002.

Dennis Puccinelli,

Executive Secretary.

[FR Doc. 02–25069 Filed 10–1–02; 8:45 am]

BILLING CODE 3510–DS–P

DEPARTMENT OF COMMERCE

International Trade Administration

Antidumping or Countervailing Duty Order, Finding, or Suspended Investigation; Opportunity To Request Administrative Review

AGENCY: Import Administration, International Trade Administration, Department of Commerce.

ACTION: Notice of Opportunity to Request Administrative Review of Antidumping or Countervailing Duty Order, Finding, or Suspended Investigation.

Background

Each year during the anniversary month of the publication of an antidumping or countervailing duty order, finding, or suspension of investigation, an interested party, as defined in section 771(9) of the Tariff Act of 1930, as amended, may request, in accordance with section 351.213 (2002), that the Department conduct an administrative review of that antidumping or countervailing duty order, finding, or suspended investigation.

Opportunity to Request a Review: Not later than the last day of October 2002, interested parties may request administrative review of the following orders, findings, or suspended investigations, with anniversary dates in October for the following periods:

	Period
Antidumping Duty Proceedings Period	
Italy: Pressure Sensitive Tape, A–475–059	10/1/01—9/30/02
Malaysia: Extruded Rubber Thread, A–557–805	10/1/01—9/30/02
Romania: Certain Hot-Rolled Carbon Steel Flat Products [1], A–485–806	5/3/01—8/31/02
The People's Republic of China: Barium Chloride, A–570–007	10/1/01—9/30/02
The People's Republic of China: Lock Washers, A–570–822	10/1/01—9/30/02
The People's Republic of China: Shop Towels, A–570–003	10/1/01—9/30/02
Countervailing Duty Proceedings	
Iran: Roasted In-Shell Pistachios, C–507–601	1/1/01—12/31/01
Suspension Agreements	
Russia: Certain Cut-to-Length Carbon Steel, A–821–808	10/1/01—9/30/02
Russia: Uranium, A–821–802	10/1/01—9/30/02
South Africa: Certain Cut-to-Length Carbon Steel, A–791–804	10/1/01—9/30/02
The People's Republic of China: Certain Cut-to-Length Carbon Steel, A–570–849	10/1/01—9/30/02
Ukraine: Silicomanganese, A–823–805	10/1/01—9/30/02
Ukraine: Certain Cut-to-Length Carbon Steel, A–823–808	10/1/01—9/30/02

[1] On September 3, 2002 (67 FR 56267), this case was inadvertently listed in the opportunity notice for September cases. The correct anniversary month for Certain Hot-Rolled Carbon Steel Flat Products from Romania is November. This case will be listed in the opportunity notice for November cases which will be published on November 1, 2002.

In accordance with section 351.213(b) of the regulations, an interested party as defined by section 771(9) of the Act may request in writing that the Secretary conduct an administrative review. For both antidumping and countervailing duty reviews, the interested party must specify the individual producers or exporters covered by an antidumping finding or an antidumping or countervailing duty order or suspension agreement for which it is requesting a review, and the requesting party must state why it desires the Secretary to review those particular producers or exporters. If the interested party intends for the Secretary to review sales of merchandise by an exporter (or a producer if that producer also exports merchandise from other suppliers) which were produced in more than one country of origin and each country of origin is subject to a separate order, then the interested party must state specifically, on an order-by-order basis, which exporter(s) the request is intended to cover.

Six copies of the request should be submitted to the Assistant Secretary for Import Administration, International Trade Administration, Room 1870, U.S. Department of Commerce, 14th Street & Constitution Avenue, NW., Washington, DC 20230. The Department also asks parties to serve a copy of their requests to the Office of Antidumping/Countervailing Enforcement, Attention: Sheila Forbes, in room 3065 of the main Commerce Building. Further, in accordance with section 351.303(f)(l)(i) of the regulations, a copy of each request must be served on every party on the Department's service list.

The Department will publish in the **Federal Register** a notice of ''Initiation of Administrative Review of Antidumping or Countervailing Duty Order, Finding, or Suspended Investigation'' for requests received by the last day of October 2002. If the Department does not receive, by the last day of October 2002, a request for review of entries covered by an order, finding, or suspended investigation listed in this notice and for the period identified above, the Department will instruct the Customs Service to assess antidumping or countervailing duties on those entries at a rate equal to the cash deposit of (or bond for) estimated antidumping or countervailing duties required on those entries at the time of entry, or withdrawal from warehouse, for consumption and to continue to collect the cash deposit previously ordered.

This notice is not required by statute but is published as a service to the international trading community.

Dated: September 26, 2002.

Holly A. Kuga,

Senior Office Director, Group II, Office 4, Import Administration.

[FR Doc. 02–25070 Filed 10–1–02; 8:45 am]

BILLING CODE 3510–DS–P

DEPARTMENT OF COMMERCE

National Oceanic and Atmospheric Administration

[I.D. 092502G]

Pacific Fishery Management Council; Public Meeting

AGENCY: National Marine Fisheries Service (NMFS), National Oceanic and Atmospheric Administration (NOAA), Commerce.

ACTION: Notice of public meeting.

SUMMARY: The Pacific Fishery Management Council's (Council) Highly Migratory Species Plan Development Team (HMSPDT) and Highly Migratory Species Advisory Subpanel (HMSAS) will hold a work session, which is open to the public.

DATES: The HMSPDT and HMSAS will meet Tuesday, October 22, 2002 from 9 a.m. until 5 p.m.; and Wednesday, October 23, 2002 from 9 a.m. until business for the day is completed.

ADDRESSES: The work session will be held at the Hubbs-Sea World Research Institute, West Room, 2595 Ingraham Street, San Diego, CA 92109; telephone: (619) 226–3870.

Council address: Pacific Fishery Management Council, 7700 NE Ambassador Place, Suite 200, Portland, OR 97220–1384.

FOR FURTHER INFORMATION CONTACT: Mr. Dan Waldeck, Pacific Fishery Management Council, (503) 820–2280.

SUPPLEMENTARY INFORMATION: The primary purpose of the work session is to review the September 2002 draft fishery management plan (FMP) and develop recommendations to the Council. The FMP is scheduled for final Council action in November 2002.Although nonemergency issues not contained in the meeting agenda may come before the HMSPDT and HMSAS for discussion, those issues may not be the subject of formal HMSPDT or HMSAS action during this meeting. HMSPDT and HMSAS action will be restricted to those issues specifically listed in this document and any issues arising after publication of this document that require emergency action under section 305(c) of the Magnuson-Stevens Fishery Conservation and Management Act, provided the public has been notified of the HMSPDT's or HMSAS's intent to take final action to address the emergency.

Special Accommodations

In our continuing efforts to streamline our meeting notification process, we are building an email notification list. If you would like to be notified of future meetings via email, please contact Ms. Kerry Aden at (503) 820–2409 or *kerry.aden@noaa.gov* to provide your email address.

The meeting is physically accessible to people with disabilities. Requests for sign language interpretation or other auxiliary aids should be directed to Ms. Carolyn Porter at (503) 820–2280 at least 5 days prior to the meeting date.

Dated: September 25, 2002.

Richard W. Surdi,

Acting Director, Office of Sustainable Fisheries, National Marine Fisheries Service.

[FR Doc. 02–25076 Filed 10–1–02; 8:45 am]

BILLING CODE 3510–22–S

DEPARTMENT OF COMMERCE

National Oceanic and Atmospheric Administration

[I.D. 092602E]

Marine Mammals; File No. 774–1649–00

AGENCY: National Marine Fisheries Service (NMFS), National Oceanic and Atmospheric Administration (NOAA), Commerce.

ACTION: Receipt of application for amendment.

SUMMARY: Notice is hereby given that NMFS, Southwest Fisheries Science Center, 8604 La Jolla Shores Drive, La Jolla, CA 92037, has requested an amendment to Permit No. 774–1649 to take Southern elephant seals (*Mirounga leonina*).

DATES: Written or telefaxed comments must be received on or before November 1, 2002.

ADDRESSES: The amendment request and related documents are available for review upon written request or by appointment in the following office(s):

Permits, Conservation and Education Division, Office of Protected Resources, NMFS, 1315 East-West Highway, Room 13705, Silver Spring, MD 20910; phone (301)713–2289; fax (301)713–0376; and

Southwest Region, NMFS, 501 West Ocean Blvd., Suite 4200, Long Beach, CA 90802–4213; phone (562)980–4001; fax (562)980–4018.Written comments or requests for a public hearing on this request should be submitted to the Chief, Permits, Conservation and

Education Division, F/PR1, Office of Protected Resources, NMFS, 1315 East-West Highway, Room 13705, Silver Spring, MD 20910. Those individuals requesting a hearing should set forth the specific reasons why a hearing on this particular amendment request would be appropriate.

Comments may also be submitted by facsimile at (301)713–0376, provided the facsimile is confirmed by hard copy submitted by mail and postmarked no later than the closing date of the comment period. Please note that comments will not be accepted by e-mail or other electronic media.

FOR FURTHER INFORMATION CONTACT: Ruth Johnson and Amy Sloan (301)713–2289.

SUPPLEMENTARY INFORMATION: The subject amendment to Permit No. 774–1649 issued on November 14, 2001 (66 FR 58445) is requested under the authority of the Marine Mammal Protection Act of 1972, as amended (16 U.S.C. 1361 *et seq.*) and the Regulations Governing the Taking and Importing of Marine Mammals (50 CFR part 216).

Permit No.774–1649–00 authorizes the permit holder to take Antarctic fur seals (*Arctocephalus gazella*), Southern elephant seals (*Mirounga leonina*), Crabeater seals (*Lobodon carcinophagus*), Leopard seals (*Hydrurga leptonyx*), Ross seals (*Ommatophoca rossii*), and Weddell seals (*Leptonychotes weddellii*) by harassment associated with life history studies and census surveys for abundance and distribution of pinnipeds. The targeted species for census surveys is the Antarctic fur seal, however, due to overlap of their breeding range with southern elephant and ice seals, a relatively small number of other Antarctic pinnipeds are authorized be taken incidentally during these surveys.

The permit holder requests authorization to take Southern elephant seal pups by level A harassment associated with capture, tagging and marking. A total of 200 seals will be taken with four accidental mortalities over the next four years.

In compliance with the National Environmental Policy Act of 1969 (42 U.S.C. 4321 *et seq.*), an initial determination has been made that the activity proposed is categorically excluded from the requirement to prepare an environmental assessment or environmental impact statement.

Concurrent with the publication of this notice in the **Federal Register**, NMFS is forwarding copies of this application to the Marine Mammal Commission and its Committee of Scientific Advisors.

Dated: September 26, 2002.

Eugene T. Nitta,

Acting Chief, Permits, Conservation and Education Division, Office of Protected Resources, National Marine Fisheries Service.

[FR Doc. 02–25075 Filed 10–1–02; 8:45 am]

BILLING CODE 3510–22–S

COMMITTEE FOR THE IMPLEMENTATION OF TEXTILE AGREEMENTS

Adjustment of an Import Limit for Certain Cotton Textile Products Produced or Manufactured in Bangladesh

September 30, 2002.

AGENCY: Committee for the Implementation of Textile Agreements (CITA).

ACTION: Issuing a directive to the Commissioner of Customs adjusting a limit.

EFFECTIVE DATE: October 2, 2002.

FOR FURTHER INFORMATION CONTACT: Ross Arnold, International Trade Specialist, Office of Textiles and Apparel, U.S. Department of Commerce, (202) 482–4212. For information on the quota status of this limit, refer to the Quota Status Reports posted on the bulletin boards of each Customs port, call (202) 927–5850, or refer to the U.S. Customs website at http://www.customs.gov. For information on embargoes and quota re-openings, refer to the Office of Textiles and Apparel website at http://www.otexa.ita.doc.gov.

SUPPLEMENTARY INFORMATION:

Authority: Section 204 of the Agricultural Act of 1956, as amended (7 U.S.C. 1854); Executive Order 11651 of March 3, 1972, as amended.

The Governments of the United States and the People's Republic of Bangladesh have agreed to increase the 2002 limit for Category 347/348 by 175,230 dozen special carryforward. For every dozen of this special carryforwared that is used, three dozen will be deducted from the 2003 limit for Category 347/348, up to a maximum of 525,690 dozen. This will reopen the current limit effective on October 2, 2002.

A description of the textile and apparel categories in terms of HTS numbers is available in the CORRELATION: Textile and Apparel Categories with the Harmonized Tariff Schedule of the United States (see **Federal Register** notice 66 FR 65178, published on December 18, 2001). Also see 66 FR 59409, published on November 28, 2001.

James C. Leonard III,

Chairman, Committee for the Implementation of Textile Agreements.

Committee for the Implementation of Textile Agreements

September 30, 2002.

Commissioner of Customs,
Department of the Treasury, Washington, DC 20229.

Dear Commissioner: This directive amends, but does not cancel, the directive issued to you on November 21, 2001, by the Chairman, Committee for the Implementation of Textile Agreements. That directive concerns imports of certain cotton and man-made fiber textile products, produced or manufactured in Bangladesh and exported during the twelve-month period which began on January 1, 2002 and extends through December 31, 2002.

Effective on October 2, 2002, you are directed to increase the current limit for Categories 347/348 to 3,949,163 dozen [1].

The Committee for the Implementation of Textile Agreements has determined that this action falls within the foreign affairs exception of the rulemaking provisions of 5 U.S.C. 553(a)(1).

Sincerely,
James C. Leonard III,
Chairman, Committee for the Implementation of Textile Agreements.

[FR Doc. 02–25116 Filed 9–30–02; 10:40 a.m.

BILLING CODE 3510–DR–S

COMMITTEE FOR THE IMPLEMENTATION OF TEXTILE AGREEMENTS

Adjustment of Import Limits for Certain Cotton, Wool, Man-Made Fiber, Silk Blend and Other Vegetable Fiber Textiles and Textile Products Produced or Manufactured in Thailand

September 26, 2002.

AGENCY: Committee for the Implementation of Textile Agreements (CITA).

ACTION: Issuing a directive to the Commissioner of Customs adjusting limits.

EFFECTIVE DATE: October 2, 2002.

FOR FURTHER INFORMATION CONTACT: Ross Arnold, International Trade Specialist, Office of Textiles and Apparel, U.S. Department of Commerce, (202) 482–4212. For information on the quota status of these limits, refer to the Quota Status Reports posted on the bulletin boards of each Customs port, call (202) 927–5850, or refer to the U.S. Customs Web site at *http://www.customs.gov*. For

[1] The limit has not been adjusted to account for any imports exported after December 31, 2001.

information on embargoes and quota re-openings, refer to the Office of Textiles and Apparel Web site at *http://otexa.ita.doc.gov*.

SUPPLEMENTARY INFORMATION:

Authority: Section 204 of the Agricultural Act of 1956, as amended (7 U.S.C. 1854); Executive Order 11651 of March 3, 1972, as amended.

The current limits for certain categories are being adjusted, variously, for carryover, carryforward, and carryforward used.

A description of the textile and apparel categories in terms of HTS numbers is available in the CORRELATION: Textile and Apparel Categories with the Harmonized Tariff Schedule of the United States (see **Federal Register** notice 66 FR 65178, published on December 18, 2001). Also see 66 FR 63036, published on December 4, 2001.

D. Michael Hutchinson,

Acting Chairman, Committee for the Implementation of Textile Agreements.

Committee for the Implementation of Textile Agreements

September 26, 2002.

Commissioner of Customs,
Department of the Treasury, Washington, DC 20229

Dear Commissioner: This directive amends, but does not cancel, the directive issued to you on November 27, 2001, by the Chairman, Committee for the Implementation of Textile Agreements. That directive concerns imports of certain cotton, wool, man-made fiber, silk blend and other vegetable fiber textiles and textile products, produced or manufactured in Thailand and exported during the twelve-month period which began on January 1, 2002 and extends through December 31, 2002.

Effective on October 2, 2002, you are directed to adjust the limits for the following categories, as provided for under the Uruguay Round Agreement on Textiles and Clothing:

Category	Adjusted twelve-month limit [1]
Group II	
237, 331pt.[2], 332–348, 351, 352, 359pt.[3], 433–438, 440, 442–448, 459pt.[4], 631pt.[5], 633–648, 651, 652, 659–H[6], 659pt.[7], 845, 846 and 852, as a group	405,485,737 square meters equivalent.
Sublevels in Group II	
335/635	758,298 dozen.
336/636	501,611 dozen.
338/339	2,607,246 dozen.
340	450,971 dozen.
341/641	964,619 dozen.
342/642	927,982 dozen.
345	439,304 dozen.
347/348	1,360,947 dozen.
351/651	376,208 dozen.
434	14,049 dozen.
435	58,547 dozen.
438	21,072 dozen.
638/639	2,952,657 dozen.
647/648	1,561,380 dozen.

[1] The limits have not been adjusted to account for any imports exported after December 31, 2001.

[2] Categories 331pt.: all HTS numbers except 6116.10.1720, 6116.10.4810, 6116.10.5510, 6116.10.7510, 6116.92.6410, 6116.92.6420, 6116.92.6430, 6116.92.6440, 6116.92.7450, 6116.92.7460, 6116.92.7470, 6116.92.8800, 6116.92.9400 and 6116.99.9510.

[3] Category 359pt.: all HTS numbers except 6115.19.8010, 6117.10.6010, 6117.20.9010, 6203.22.1000, 6204.22.1000, 6212.90.0010, 6214.90.0010, 6406.99.1550, 6505.90.1525, 6505.90.1540, 6505.90.2060 and 6505.90.2545.

[4] Category 459pt.: all HTS numbers except 6115.19.8020, 6117.10.1000, 6117.10.2010, 6117.20.9020, 6212.90.0020, 6214.20.0000, 6405.20.6030, 6405.20.6060, 6405.20.6090, 6406.99.1505 and 6406.99.1560.

[5] Category 631pt.: all HTS numbers except 6116.10.1730, 6116.10.4820, 6116.10.5520, 6116.10.7520, 6116.93.8800, 6116.93.9400, 6116.99.4800, 6116.99.5400 and 6116.99.9530.

[6] Category 659–H: only HTS numbers 6502.00.9030, 6504.00.9015, 6504.00.9060, 6505.90.5090, 6505.90.6090, 6505.90.7090 and 6505.90.8090.

[7] Category 659pt.: all HTS numbers except 6502.00.9030, 6504.00.9015, 6504.00.9060, 6505.90.5090, 6505.90.6090, 6505.90.7090, 6505.90.8090 (Category 659–H); 6115.11.0010, 6115.12.2000, 6117.10.2030, 6117.20.9030, 6212.90.0030, 6214.30.0000, 6214.40.0000, 6406.99.1510 and 6406.99.1540.

The Committee for the Implementation of Textile Agreements has determined that these actions fall within the foreign affairs exception to the rulemaking provisions of 5 U.S.C. 553(a)(1).

D. Michael Hutchinson,

Acting Chairman, Committee for the Implementation of Textile Agreements.

[FR Doc. 02–24983 Filed 10–1–02; 8:45 am]

BILLING CODE 3510–DR–S

DEPARTMENT OF EDUCATION

Notice of Proposed Information Collection Requests

AGENCY: Department of Education.

ACTION: Notice.

SUMMARY: The Leader, Regulatory Information Management Group, Office of the Chief Information Officer, invites comments on the proposed information collection requests as required by the Paperwork Reduction Act of 1995.

DATES: Interested persons are invited to submit comments on or before December 2, 2002.

SUPPLEMENTARY INFORMATION: Section 3506 of the Paperwork Act of 1995 (44 U.S.C. Chapter 35) reuqires that the Office of Management and Budget (OMB) provide interested Federal agencies and the public an early opportunity to comment on information collection requests. OMB may amend or waive the requirement for public consultation to the extent that public participation in the approval process would defeat the purpose of the information collection, violate State or Federal law, or substantially interfere with any agency's ability to perform its statutory obligations. The Leader, Regulatory Information Management Group, Office of the Chief Information Officer, publishes that notice containing proposed information collection requests prior to submission of these requests to OMB. Each proposed information collection, grouped by office, contains the following: (1) Type of review requested, *e.g.* new, revision, extension, existing or reinstatment; (2) title; (3) summary of the collection; (4) description of the need for, and proposed use of, the information; (5) respondents and frequency of collection; and (6) reporting and/or recordkeeping burden. OMB invites public comment. The Department of Education is especially interested in public comment addressing the following issues: (1) Is this collection necessary to the proper functions of the Department; (2) will this information be processed and used in a timely manner; (3) is the esstimate of burden accurate; (4) how might the Department enhance the quality, utility, and clarity of the inforamtion to be collected; and (5) how might the Department minimize the burden of this collection on the respondents, including t hrough the use of information technology.

Dated: September 26, 2002.

John D. Tressler,

Leader, Regulatory Infromation Management Group, Office of the Chief Information Officer.

Office of Special Education and Rehabilitative Service

Type of Review: Extension.

Title: Annual Program Cost Report.

Frequency: Annually.

Affected Public: State, Local, or Tribal Gov't, SEAs or LEAs.

Reporting and Recordkeeping Hour Burden:

Responses: 82.

Burden Hours: 385.

Abstract: Vocational Rehabilitation (VR) Services data submitted on the RSA–2 by State VR agencies for each fiscal year (FY) is used by the Rehabilitation Services Administration

(RSA) to administer and manage the Title I Program; to analyze expenditures, evaluate program performance and identify problem areas.

Requests for copies of the proposed information collection request may be accessed from *http://edicsweb.ed.gov,* by selecting the ''Browse Pending Collections'' link and by clicking on lilnk number 2168. When you access the information collection, click on ''Download Attachments'' to view. Written requests for information should be addressed to Vivian Reese, Department of Education, 400 Maryland Avenue, SW., Room 4050, Regional Office Building 3, Washington, DC 20202–4651 or to the e-mail address *vivian_reese@ed.gov.* Requests may also be electronically mailed to the e-mail *address OCIO_RIMG@ed.gov* or faxed to 202–708–9346. Please specify the complete title of the information collection when making your request.

Comments regarding burden and/or the collection activity requirements should be directed to Sheila Carey or her e-mail address *Sheila.Carey@ed.gov.* Individuals who use a telecommunications device for the deaf (TDD) may call the Federal Information Relay Service (FIRS) at 1–800–877–8339.

[FR Doc. 02–24964 Filed 10–1–02; 8:45 am]

BILLING CODE 4000–01–P

DEPARTMENT OF EDUCATION

Submission for OMB Review; Comment Request

AGENCY: Department of Education.

ACTION: Notice.

SUMMARY: The Leader, Regulatory Information Management Group, Office of the Chief Information Officer invites comments on the submission for OMB review as required by the Paperwork Reduction Act of 1995.

DATES: Interested persons are invited to submit comments on or before November 1, 2002.

ADDRESSES: Written comments should be addressed to the Office of Information and Regulatory Affairs, Attention: Lauren Wittenberg, Desk Officer, Department of Education, Office of Management and Budget, 725 17th Street, NW., Room 10235, New Executive Office Building, Washington, DC 20503 or should be electronically mailed to the e-mail address *Lauren_Wittenberg@omb.eop.gov.*

SUPPLEMENTARY INFORMATION: Section 3506 of the Paperwork Reduction Act of 1995 (44 U.S.C. Chapter 35) requires that the Office of Management and Budget (OMB) provide interested Federal agencies and the public an early opportunity to comment on information collection requests. OMB may amend or waive the requirement for public consultation to the extent that public participation in the approval process would defeat the purpose of the information collection, violate State or Federal law, or substantially interfere with any agency's ability to perform its statutory obligations. The Leader, Regulatory Information Management Group, Office of the Chief Information Officer, publishes that notice containing proposed information collection requests prior to submission of these requests to OMB. Each proposed information collection, grouped by office, contains the following: (1) Type of review requested, *e.g.* new, revision, extension, existing or reinstatement; (2) title; (3) summary of the collection; (4) description of the need for, and proposed use of, the information; (5) respondents and frequency of collection; and (6) reporting and/or recordkeeping burden. OMB invites public comment.

Dated:September 25, 2002.

John D. Tressler,

Leader, , Regulatory Information Management Group, Office of the Chief Information Officer.

Federal Student Aid

Type of Review: Revision.

Title: William D. Ford Federal Direct Loan Program Repayment Plan Selection Form.

Frequency: On Occasion.

Affected Public: Individuals or household.

Reporting and Recordkeeping Hour Burden:

Responses: 1,927,000.

Burden Hours: 635,910.

Abstract: Borrowers who receive loans through the William D. Ford Federal Direct Loan Program will use this form to select a repayment plan for their loans.

Requests for copies of the submission for OMB review; comment request may be accessed from *http://edicsweb.ed.gov*, by selecting the ''Browse Pending Collections'' link and by clicking on link number 2116. When you access the information collection, click on ''Download Attachments '' to view. Written requests for information should be addressed to Vivian Reese, Department of Education, 400 Maryland Avenue, SW., Room 4050, Regional Office Building 3, Washington, DC 20202–4651 or to the e-mail address *vivan.reese@ed.gov.* Requests may also be electronically mailed to the e-mail address *OCIO_RIMG@ed.gov* or faxed to 202–708–9346. Please specify the complete title of the information collection when making your request.

Comments regarding burden and/or the collection activity requirements should be directed to Joseph Schubart at his e-mail address *Joe.Schubart@ed.gov.* Individuals who use a telecommunications device for the deaf (TDD) may call the Federal Information Relay Service (FIRS) at 1–800–877–8339.

[FR Doc. 02–24855 Filed 10–1–02; 8:45 am]

BILLING CODE 4000–01–P

DEPARTMENT OF ENERGY

Office of Science

Advanced Scientific Computing Advisory Committee

AGENCY: Department of Energy.

ACTION: Notice of open meeting.

SUMMARY: This notice announces a meeting of the Advanced Scientific Computing Advisory Committee (ASCAC). Federal Advisory Committee Act (Public Law 92–463, 86 Stat. 770) requires that public notice of these meetings be announced in the **Federal Register**.

DATES: Thursday, October 17, 2002, 8:30 a.m. to 5:30 p.m.; Friday, October 18, 2002, 8:30 a.m. to 1 p.m.

ADDRESSES: Hilton Washington Embassy Row Hotel, 2015 Massachusetts Avenue, NW., Washington, DC.

FOR FURTHER INFORMATION CONTACT: Melea Baker, Office of Advanced Scientific Computing Research; SC–30/Germantown Building; U.S. Department of Energy; 1000 Independence Avenue, SW., Washington DC 20585–1290; Telephone (301)–903–7486 (Email: Melea.Baker@science.doe.gov).

SUPPLEMENTARY INFORMATION:

Purpose of the Meeting: The purpose of this meeting is to provide advice and guidance with respect to the advanced scientific computing research program.

Tentative Agenda: Agenda will include discussions of the following:

Thursday, October 17, 2002

Introduction

Remarks from the Director, Office of Science

Reports and Discussions of ASCAC Facilities Subcommittee Meeting on Japanese Earth Simulator Initiative

Scientific Discovery through Advanced Computing Update Public Comment

Friday, October 18, 2002

Report on Activities of DOE Advisory Committee Chairs
Workshop Updates—Nanoscience and Networking
Applied Mathematics Roadmap
Fusion Simulation Project Update
Biotechnology Subcommittee Report
New Business
Advisory Committee Open Discussion of Issues
Public Comment

Public Participation: The meeting is open to the public. If you would like to file a written statement with the Committee, you may do so either before or after the meeting. If you would like to make oral statements regarding any of the items on the agenda, you should contact Melea Baker via FAX at 301–903–4846 or via email (*Melea.Baker@science.doe.gov*). You must make your request for an oral statement at least 5 business days prior to the meeting. Reasonable provision will be made to include the scheduled oral statements on the agenda. The Chairperson of the Committee will conduct the meeting to facilitate the orderly conduct of business. Public comment will follow the 10-minute rule.

Minutes: The minutes of this meeting will be available for public review and copying within 30 days at the Freedom of Information Public Reading Room; 1E–190, Forrestal Building; 1000 Independence Avenue, SW., Washington, DC 20585; between 9 a.m. and 4 p.m., Monday through Friday, except holidays.

Issued in Washington, DC, on September 27, 2002.

Rachel M. Samuel,

Deputy Advisory Committee, Management Officer.

[FR Doc. 02–25074 Filed 10–1–02; 8:45 am]

BILLING CODE 6450–01–P

DEPARTMENT OF ENERGY

Federal Energy Regulatory Commission

[Docket No. RP02–556–000]

Algonquin Gas Transmission Company; Notice of Proposed Changes in FERC Gas Tariff

September 26, 2002.

Take notice that on September 24, 2002, Algonquin Gas Transmission Company (Algonquin) tendered for filing as part of its FERC Gas Tariff, Fourth Revised Volume No. 1, the following revised tariff sheet effective October 25, 2002:

Second Revised Sheet No. 651

Algonquin states that the purpose of this filing is to revise the capacity release provisions in Section 14 of the General Terms and Conditions with the addition of a new section 14.12 which sets forth its right to terminate temporary capacity releases by shippers who are not creditworthy or who have become non-creditworthy.

Algonquin states that copies of its filing have been mailed to all affected customers and interested state commissions. Any person desiring to be heard or to protest said filing should file a motion to intervene or a protest with the Federal Energy Regulatory Commission, 888 First Street, NE., Washington, DC 20426, in accordance with Sections 385.214 or 385.211 of the Commission's rules and regulations. All such motions or protests must be filed in accordance with Section 154.210 of the Commission's regulations. Protests will be considered by the Commission in determining the appropriate action to be taken, but will not serve to make protestants parties to the proceedings. Any person wishing to become a party must file a motion to intervene. This filing is available for review at the Commission in the Public Reference Room or may be viewed on the Commission's Web site at *http://www.ferc.gov* using the ''FERRIS'' link. Enter the docket number excluding the last three digits in the docket number field to access the document. For Assistance, call (202) 502–8222 or for TTY, (202) 502–8659. Comments, protests and interventions may be filed electronically via the Internet in lieu of paper. The Commission strongly encourages electronic filings. *See*, 18 CFR 385.2001(a)(1)(iii) and the instructions on the Commission's Web site under the ''e-Filing'' link.

Linwood A. Watson, Jr.,

Deputy Secretary.

[FR Doc. 02–25023 Filed 10–1–02; 8:45 am]

BILLING CODE 6717–01–P

DEPARTMENT OF ENERGY

Federal Energy Regulatory Commission

[Docket No. RP02–557–000]

Algonquin LNG, Inc.; Notice of Proposed Changes in FERC Gas Tariff

September 26, 2002.

Take notice that on September 24, 2002, Algonquin LNG, Inc. (ALNG) tendered for filing as part of its FERC Gas Tariff, First Revised Volume No. 1, Fifth Revised Sheet No. 66, to be effective October 25, 2002.

ALNG states that the purpose of this filing is to revise the capacity release provisions in Section 14 of the General Terms and Conditions with the addition of a new Section 14.12 which sets forth its right to terminate temporary capacity releases by shippers who are not creditworthy or who have become non-creditworthy.

ALNG states that copies of its filing have been mailed to all affected customers and interested state commissions.

Any person desiring to be heard or to protest said filing should file a motion to intervene or a protest with the Federal Energy Regulatory Commission, 888 First Street, NE., Washington, DC 20426, in accordance with Sections 385.214 or 385.211 of the Commission's Rules and Regulations. All such motions or protests must be filed in accordance with Section 154.210 of the Commission's Regulations. Protests will be considered by the Commission in determining the appropriate action to be taken, but will not serve to make protestants parties to the proceedings. Any person wishing to become a party must file a motion to intervene. This filing is available for review at the Commission in the Public Reference Room or may be viewed on the Commission's website at *http://www.ferc.gov* using the ''FERRIS'' link. Enter the docket number excluding the last three digits in the docket number field to access the document. For Assistance, call (202) 502–8222 or for TTY, (202) 502–8659. Comments, protests and interventions may be filed electronically via the Internet in lieu of paper. The Commission strongly encourages electronic filings. *See*, 18 CFR 385.2001(a)(1)(iii) and the instructions on the Commission's web site under the ''e-Filing'' link.

Linwood A. Watson, Jr.,

Deputy Secretary.

[FR Doc. 02–25022 Filed 10–1–02; 8:45 am]

BILLING CODE 6717–01–P

DEPARTMENT OF ENERGY

Federal Energy Regulatory Commission

[Docket No. RP02–356–000]

Canyon Creek Compression Company; Notice of Further Technical Conference

September 26, 2002.

In the Commission's order issued on June 27, 2002,[1] the Commission directed that a technical conference be held to address issues raised by the filing.

Take notice that a further telephone conference will be held on Tuesday, October 8, 2002, at 10 a.m.

Parties will be sent instruction on how to join the telephone conference.

Linwood A. Watson, Jr.,

Deputy Secretary.

[FR Doc. 02–25027 Filed 10–1–02; 8:45 am]

BILLING CODE 6717–01–P

[1] Canyon Creek Compression Company, 99 FERC ¶61,351 (2002).

DEPARTMENT OF ENERGY

Federal Energy Regulatory Commission

[Docket No. RP02–558–000]

East Tennessee Natural Gas Company; Notice of Proposed Changes in FERC Gas Tariff

September 26, 2002.

Take notice that on September 24, 2002, East Tennessee Natural Gas Company (East Tennessee) tendered for filing as part of its FERC Gas Tariff, Second Revised Volume No. 1, Third Revised Sheet No. 100, First Revised Original Sheet No. 147A, Fifth Revised Sheet No. 155, and Original Sheet No. 155A, effective October 25, 2002.

East Tennessee states that the purpose of this filing is to revise the capacity release provisions in Sections 17 and 18 of the General Terms and Conditions with the addition of a new Sections 17.15 and 18.14 which set forth its right to terminate temporary capacity releases by shippers who are not creditworthy or who have become non-creditworthy.

East Tennessee states that copies of its filing have been mailed to all affected customers and interested state commissions.

Any person desiring to be heard or to protest said filing should file a motion to intervene or a protest with the Federal Energy Regulatory Commission, 888 First Street, NE., Washington, DC 20426, in accordance with Sections 385.214 or 385.211 of the Commission's Rules and Regulations. All such motions or protests must be filed in accordance with Section 154.210 of the Commission's Regulations. Protests will be considered by the Commission in determining the appropriate action to be taken, but will not serve to make protestants parties to the proceedings. Any person wishing to become a party must file a motion to intervene. This filing is available for review at the Commission in the Public Reference Room or may be viewed on the Commission's website at *http://www.ferc.gov* using the ''FERRIS'' link. Enter the docket number excluding the last three digits in the docket number field to access the document. For Assistance, call (202) 502–8222 or for TTY, (202) 502–8659. Comments, protests and interventions may be filed electronically via the Internet in lieu of paper. The Commission strongly encourages electronic filings. *See*, 18 CFR 385.2001(a)(1)(iii) and the instructions on the Commission's web site under the ''e-Filing'' link.

Linwood A. Watson, Jr.,

Deputy Secretary.

[FR Doc. 02–25021 Filed 10–1–02; 8:45 am]

BILLING CODE 6717–01–P

DEPARTMENT OF ENERGY

Federal Energy Regulatory Commission

[Docket No. RP02–554–000]

Eastern Shore Natural Gas Company; Notice of Proposed Changes in FERC Gas Tariff

September 26, 2002.

Take notice that on September 24, 2002, Eastern Shore Natural Gas Company (ESNG) tendered for filing as part of its FERC Gas Tariff, Second Revised Volume No. 1, revised tariff sheets listed on Appendix A to the filing, with a proposed effective date of October 1, 2002.

ESNG states that the purpose of this instant filing is to track rate changes attributable to storage services purchased from Transcontinental Gas Pipe Line Corporation (Transco) under its Rate Schedules GSS, LGA and LSS. The costs of the above referenced storage services comprise the rates and charges payable under ESNG's Rate Schedules GSS , LGA and LSS, respectively. This tracking filing is being made pursuant to Section 3 of ESNG's Rate Schedules GSS, LGA and LSS.

ESNG states that copies of the filing have been served upon its jurisdictional customers and interested State Commissions.

Any person desiring to be heard or to protest said filing should file a motion to intervene or a protest with the Federal Energy Regulatory Commission, 888 First Street, NE., Washington, DC 20426, in accordance with sections 385.214 or 385.211 of the Commission's rules and regulations. All such motions or protests must be filed in accordance with section 154.210 of the Commission's regulations. Protests will be considered by the Commission in determining the appropriate action to be taken, but will not serve to make protestants parties to the proceedings. Any person wishing to become a party must file a motion to intervene. This filing is available for review at the Commission in the Public Reference Room or may be viewed on the Commission's Web site at *http://www.ferc.gov* using the ''FERRIS'' link. Enter the docket number excluding the last three digits in the docket number field to access the document. For Assistance, call (202) 502–8222 or for TTY, (202) 502–8659. Comments, protests and interventions may be filed electronically via the Internet in lieu of paper. The Commission strongly encourages electronic filings. *See*, 18 CFR 385.2001(a)(1)(iii) and the instructions on the Commission's Web site under the ''e-Filing'' link.

Linwood A. Watson, Jr.,

Deputy Secretary.

[FR Doc. 02–25025 Filed 10–1–02; 8:45 am]

BILLING CODE 6717–01–P

DEPARTMENT OF ENERGY

Federal Energy Regulatory Commission

[Docket No. RP02–559–000]

Egan Hub Partners, L.P.; Notice of Proposed Changes in FERC Gas Tariff

September 26, 2002.

Take notice that on September 24, 2002, Egan Hub Partners, L.P. (Egan Hub) tendered for filing as part of its FERC Gas Tariff, Original Volume No. 1, Original Sheet No. 70A, effective October 25, 2002:

Egan Hub states that the purpose of this filing is to revise the capacity release provisions in Section 4 of the General Terms and Conditions with the addition of a new Section 4.13 which sets forth its right to terminate temporary capacity releases by shippers

who are not creditworthy or who have become non-creditworthy.

Egan Hub states that copies of its filing have been mailed to all affected customers and interested state commissions.

Any person desiring to be heard or to protest said filing should file a motion to intervene or a protest with the Federal Energy Regulatory Commission, 888 First Street, NE., Washington, DC 20426, in accordance with Sections 385.214 or 385.211 of the Commission's rules and regulations. All such motions or protests must be filed in accordance with Section 154.210 of the Commission's Regulations. Protests will be considered by the Commission in determining the appropriate action to be taken, but will not serve to make protestants parties to the proceedings. Any person wishing to become a party must file a motion to intervene. This filing is available for review at the Commission in the Public Reference Room or may be viewed on the Commission's Web site at *http://www.ferc.gov* using the ''FERRIS'' link. Enter the docket number excluding the last three digits in the docket number field to access the document. For Assistance, call (202) 502–8222 or for TTY, (202) 502–8659. Comments, protests and interventions may be filed electronically via the Internet in lieu of paper. The Commission strongly encourages electronic filings. *See*, 18 CFR 385.2001(a)(1)(iii) and the instructions on the Commission's web site under the ''e-Filing'' link.

Linwood A. Watson, Jr.,

Deputy Secretary.

[FR Doc. 02–25020 Filed 10–1–02; 8:45 am]

BILLING CODE 6717–01–P

DEPARTMENT OF ENERGY

Federal Energy Regulatory Commission

[Project No. 184–065, California]

El Dorado Irrigation District; Notice of Public Meetings

September 25, 2002.

The Federal Energy Regulatory Commission (Commission) is reviewing the application for a new license for the El Dorado Project (FERC No. 184), filed on February 22, 2000. The El Dorado Project, licensed to the El Dorado Irrigation District (EID), is located on the South Fork American River, in El Dorado, Alpine, and Amador Counties, California. The project occupies lands of the Eldorado National Forest.

The EID, several State and Federal agencies, and several non-governmental agencies are working collaboratively with a facilitator to resolve certain issues relevant to this proceeding. These meetings are a part of that collaborative process. Meetings will be held as follows:

Date	Group	Time
October 8	Aquatics/Hydrology Workgroup	9 a.m.–4 p.m.
October 9	Aquatics/Hydrology Workgroup	9 a.m.–12 p.m.
October 9	Recreation Workgroup	1 p.m.–4 p.m.

We invite the participation of all interested governmental agencies, non-governmental organizations, and the general public in these meetings.

All meetings will be held in the Rancho Cordova Holiday Inn, located at 11131 Folsom Blvd, Rancho Cordova, California.

For further information, please contact Elizabeth Molloy at (202) 502–8771 or John Mudre at (202) 502–8902.

Linwood A. Watson, Jr.,

Deputy Secretary.

[FR Doc. 02–24880 Filed 10–1–02; 8:45 am]

BILLING CODE 6717–01–P

DEPARTMENT OF ENERGY

Federal Energy Regulatory Commission

[Docket Nos. RP00–318–002 and RP01–6–003]

Enbridge Pipelines (KPC); Notice of Compliance Filing

September 25, 2002.

Take notice that on September 23, 2002, as amended September 24, 2002, Enbridge Pipelines (KPC), (KPC) tendered for filing as part of its FERC Gas Tariff, First Revised Volume No. 1, Substitute First Revised Sheet No. 121B, with an effective date of September 1, 2002.

KPC states that the filing is being made in compliance with the Commission's September 12, 2002 order in these proceedings.

KPC states that complete copies of its filing are being mailed to all of the parties on the Commission's Official Service list for these proceedings, all of its jurisdictional customers, and applicable State Commissions.

Any person desiring to protest said filing should file a protest with the Federal Energy Regulatory Commission, 888 First Street, NE., Washington, DC 20426, in accordance with Section 385.211 of the Commission's Rules and Regulations. All such protests must be filed in accordance with Section 154.210 of the Commission's Regulations. Protests will be considered by the Commission in determining the appropriate action to be taken, but will not serve to make protestants parties to the proceedings. This filing is available for review at the Commission in the Public Reference Room or may be viewed on the Commission's Web site at *http://www.ferc.gov* using the ''FERRIS'' link. Enter the docket number excluding the last three digits in the docket number field to access the document. For Assistance, call (202) 502–8222 or for TTY, (202) 502–8659. The Commission strongly encourages electronic filings. *See*, 18 CFR 385.2001(a)(1)(iii) and the instructions on the Commission's Web site under the ''e-Filing'' link.

Linwood A. Watson, Jr.,

Deputy Secretary.

[FR Doc. 02–24884 Filed 10–1–02; 8:45 am]

BILLING CODE 6717–01–P

DEPARTMENT OF ENERGY

Federal Energy Regulatory Commission

[Docket No. RP02–488–001]

Enbridge Pipelines (KPC); Notice of Compliance Filing

September 26, 2002.

Take notice that on September 24, 2002, Enbridge Pipelines (KPC), (KPC) tendered for filing as part of its FERC Gas Tariff, First Revised Volume No. 1,

Substitute First Revised Sheet No. 180, with an effective date of October 1, 2002.

KPC states that the filing is being made in compliance with the Commission's September 16, 2002 order in this proceeding.

KPC states that complete copies of its filing are being mailed to all of the parties on the Commission's Official Service list for these proceedings, all of its jurisdictional customers, and applicable State Commissions.

Any person desiring to protest said filing should file a protest with the Federal Energy Regulatory Commission, 888 First Street, NE., Washington, DC 20426, in accordance with section 385.211 of the Commission's rules and regulations. All such protests must be filed in accordance with section 154.210 of the Commission's regulations. Protests will be considered by the Commission in determining the appropriate action to be taken, but will not serve to make protestants parties to the proceedings. This filing is available for review at the Commission in the Public Reference Room or may be viewed on the Commission's Web site at *http://www.ferc.gov* using the ''FERRIS'' link. Enter the docket number excluding the last three digits in the docket number field to access the document. For Assistance, call (202) 502–8222 or for TTY, (202) 502–8659. The Commission strongly encourages electronic filings. See, 18 CFR 385.2001(a)(1)(iii) and the instructions on the Commission's Web site under the ''e-Filing'' link.

Linwood A. Watson, Jr.,

Deputy Secretary.

[FR Doc. 02–25026 Filed 10–1–02; 8:45 am]

BILLING CODE 6717–01–P

DEPARTMENT OF ENERGY

Federal Energy Regulatory Commission

[Docket No. RP02–560–000]

Maritimes & Northeast Pipeline, L.L.C.; Notice of Proposed Changes in FERC Gas Tariff

September 26, 2002.

Take notice that on September 24, 2002, Maritimes & Northeast Pipeline, L.L.C. (Maritimes) tendered for filing as part of its FERC Gas Tariff, First Revised Volume No. 1, Original Sheet No. 259A, to become effective October 25, 2002.

Maritimes states that the purpose of this filing is to revise the capacity release provisions in Section 9 of the General Terms and Conditions with the addition of a new Section 9.9 which sets forth its right to terminate temporary capacity releases by shippers who are not creditworthy or who have become non-creditworthy.

Maritimes states that copies of its filing have been mailed to all affected customers and interested state commissions.

Any person desiring to be heard or to protest said filing should file a motion to intervene or a protest with the Federal Energy Regulatory Commission, 888 First Street, NE., Washington, DC 20426, in accordance with Sections 385.214 or 385.211 of the Commission's Rules and Regulations. All such motions or protests must be filed in accordance with Section 154.210 of the Commission's Regulations. Protests will be considered by the Commission in determining the appropriate action to be taken, but will not serve to make protestants parties to the proceedings. Any person wishing to become a party must file a motion to intervene. This filing is available for review at the Commission in the Public Reference Room or may be viewed on the Commission's website at *http://www.ferc.gov* using the ''FERRIS'' link. Enter the docket number excluding the last three digits in the docket number field to access the document. For Assistance, call (202)502–8222 or for TTY, (202) 502–8659. Comments, protests and interventions may be filed electronically via the Internet in lieu of paper. The Commission strongly encourages electronic filings. *See*, 18 CFR 385.2001(a)(1)(iii) and the instructions on the Commission's web site under the ''e-Filing'' link.

Linwood A. Watson, Jr.,

Deputy Secretary.

[FR Doc. 02–25019 Filed 10–1–02; 8:45 am]

BILLING CODE 6717–01–P

DEPARTMENT OF ENERGY

Federal Energy Regulatory Commission

[Docket No. RP99–176–068]

Natural Gas Pipeline Company of America; Notice of Negotiated Rate

September 25, 2002.

Take notice that on September 23, 2002, Natural Gas Pipeline Company of America (Natural) tendered for filing to become part of its FERC Gas Tariff, Sixth Revised Volume No. 1, certain tariff sheets, to be effective December 1, 2002.

Natural states that the purpose of this filing is to implement a new negotiated rate transaction entered into by Natural and Northern Indiana Public Service Company under Natural's Rate Schedule FTS pursuant to Section 49 of the General Terms and Conditions of Natural's Tariff. Natural states that the amended negotiated rate agreement does not deviate in any material respect from the applicable form of service agreement in Natural's Tariff.

Natural states that copies of the filing are being mailed to all parties set out on the Commission's official service list in Docket No. RP99–176.

Any person desiring to be heard or to protest said filing should file a motion to intervene or a protest with the Federal Energy Regulatory Commission, 888 First Street, NE, Washington, DC 20426, in accordance with Sections 385.214 or 385.211 of the Commission's Rules and Regulations. All such motions or protests must be filed in accordance with Section 154.210 of the Commission's Regulations. Protests will be considered by the Commission in determining the appropriate action to be taken, but will not serve to make protestants parties to the proceedings. Any person wishing to become a party must file a motion to intervene. This filing is available for review at the Commission in the Public Reference Room or may be viewed on the Commission's Web site at *http://www.ferc.gov* using the ''FERRIS'' link. Enter the docket number excluding the last three digits in the docket number field to access the document. For Assistance, call (202)502–8222 or for TTY, (202) 502–8659. Comments, protests and interventions may be filed electronically via the Internet in lieu of paper. The Commission strongly encourages electronic filings. *See*, 18 CFR 385.2001(a)(1)(iii) and the instructions on the Commission's Web site under the ''e-Filing'' link.

Linwood A. Watson, Jr.,

Deputy Secretary.

[FR Doc. 02–24883 Filed 10–1–02; 8:45 am]

BILLING CODE 6717–01–P

DEPARTMENT OF ENERGY

Federal Energy Regulatory Commission

September 25, 2002.

[Docket Nos. RP00–398–002 and RP01–34–004]

Overthrust Pipeline Company; Notice of Compliance Filing

Take notice that on September 23, 2002, Overthrust Pipeline Company (Overthrust) tendered for filing as part of its FERC Gas Tariff, First Revised

Volume No. 1-A, the tariff sheets listed follows:

First Revised Volume No. 1-A
Ninth Revised Sheet No. 1
Ninth Revised Sheet No. 4
Sixth Revised Sheet No. 5
Twelfth Revised Sheet No. 30
Fifth Revised Sheet No. 44
Fifth Revised Sheet No. 45
Ninth Revised Sheet No. 48
Fifth Revised Sheet No. 54
Fourth Revised Sheet No. 58
Original Sheet No. 58A
First Revised Sheet No. 67G
Original Sheet No. 67H
Original Sheet No. 67I
Original Sheet No. 67J
Original Sheet No. 67K
Fourth Revised Sheet No. 78E
First Revised Sheet No. 78I
Original Sheet No. 78J
Original Sheet No. 78K
Alternate Original Sheet No. 78J
Alternate Original Sheet No. 78K

Overthrust states that the filing is being made in compliance with the Commission's Order on Compliance with Order Nos. 637, 587-G and 587-L issued on August 22, 2002, (the August 22nd order) in Docket Nos. RP00–398–000, RP01–34–000, and -001. The August 22nd order approved, in part, Overthrust's pro forma tariff sheets filed July 14, 2000, and directed Overthrust to make further modifications. Overthrust tendered for filing, proposed actual tariff sheets that include the language approved in Overthrust's July 14, 2000, pro forma compliance filing as well as language that comports with the Commission's directives. These modifications are included in First Revised Volume No. 1-A of Overthrust's FERC Gas Tariff.

Overthrust states that a copy of this filing has been served upon its customers, the Public Service Commission of Utah and the Public Service Commission of Wyoming.

Any person desiring to protest said filing should file a protest with the Federal Energy Regulatory Commission, 888 First Street, NE, Washington, DC 20426, in accordance with Section 385.211 of the Commission's Rules and Regulations. All such protests must be filed in accordance with Section 154.210 of the Commission's Regulations. Protests will be considered by the Commission in determining the appropriate action to be taken, but will not serve to make protestants parties to the proceedings. This filing is available for review at the Commission in the Public Reference Room or may be viewed on the Commission's Web site at *http://www.ferc.gov* using the ''FERRIS'' link. Enter the docket number excluding the last three digits in the docket number field to access the document. For Assistance, call (202)502–8222 or for TTY, (202) 502–8659. The Commission strongly encourages electronic filings. *See*, 18 CFR 385.2001(a)(1)(iii) and the instructions on the Commission's Web site under the ''e-Filing'' link.

Linwood A. Watson, Jr.,

Deputy Secretary.

[FR Doc. 02–24885 Filed 10–1–02; 8:45 am]

BILLING CODE 6717–01–P

DEPARTMENT OF ENERGY

Federal Energy Regulatory Commission

[Docket No. OR02–13–000]

SFPP, L.P.; Notice of Petition for Declaratory Order

September 26, 2002.

Take notice that on September 19, 2002, SFPP, L.P. (SFPP) filed in Docket No. OR02–13–000, a petition for a declaratory order, pursuant to Rule 207(a)(2) of the Commission's Rules of Practice and Procedure (18 CFR 385.207(a)(2)). SFPP requests that the Commission issue an expedited decision on this Petition no later than the end of December 2002. This filing may be viewed online at *http://www.ferc.fed.us/ferris.htm*, on file with the Commission and open to public inspection.

SFPP states that it proposes to expand the capacity of its currently constrained East Line, which operates under Tariff FERC No. 73 and provides service from El Paso, TX and Diamond Junction, TX to Lordsburg, NM, Tucson, AZ, and Phoenix, AZ, as follows: (1) SFPP proposes to expand the capacity of the East Line's segment from El Paso to Tucson by approximately 53,000 barrels per day, and (2) SFPP proposes to expand the capacity of the East Line's segment from Tucson to Phoenix by approximately 44,000 barrels per day.

SFPP's East Line has been under prorationing since the beginning of 1999. The current constrained capacity of the East Line is expected to be exacerbated by anticipated expansions of refineries and a pipeline currently providing supply to the East Line, and by the opening of Longhorn Pipeline. SFPP states that letters of intent received from current and potential East Line shippers regarding this proposed expansion indicate that this expansion is necessary and will be utilized.

In order to go forward with this proposed expansion of the East Line, SFPP states that it seeks, by the end of December 2002 a Commission declaration:

(a) That a substantial divergence, pursuant to Section 342.4(a), can be based on a capital investment, such as SFPP's investment in the proposed East Line expansion;

(b) that, if cost-of-service tariff rates calculated in the event the proposed East Line expansion goes into service exceed indexed tariff rates by 20 percent or more, the Commission will find that such a difference constitutes a substantial divergence pursuant to Section 342.4(a) under the circumstances of the East Line and will permit SFPP to charge such cost-of-service tariff rates; and

(c) that if, in response to a protest concerning the level of the tariff rates, the Commission suspends East Line cost-of-service tariff rates filed by SFPP following the proposed East Line expansion, those rates will be accepted for filing and made effective as of the date proposed by SFPP, subject to refund.

SFPP states that without favorable Commission action on these requests, it will not undertake the proposed East Line expansion. Assuming Commission approval of SFPP's Petition for Declaratory Order and request for expedited decisions, SFPP states that it anticipates construction to begin in 2004 and service on the expanded East Line to begin in the first quarter of 2005.

Any person desiring to be heard or to protest said filing should file a motion to intervene or a protest with the Federal Energy Regulatory Commission, 888 First Street, NE, Washington, DC 20426, in accordance with Sections 385.214 or 385.211 of the Commission's Rules and Regulations. All such motions or protests must be filed on or before October 21, 2002. Protests will be considered by the Commission in determining the appropriate action to be taken, but will not serve to make protestants parties to the proceedings. Any person wishing to become a party must file a motion to intervene. This filing is available for review at the Commission in the Public Reference Room or may be viewed on the Commission's Web site at *http://www.ferc.gov* using the ''FERRIS'' link. Enter the docket number excluding the last three digits in the docket number field to access the document. For Assistance, call (202)502–8222 or for TTY, (202) 502–8659. Comments, protests and interventions may be filed electronically via the Internet in lieu of paper. The Commission strongly encourages electronic filings. *See*, 18 CFR 385.2001(a)(1)(iii) and the

instructions on the Commission's Web site under the ''e-Filing'' link.

Linwood A. Watson, Jr.,

Deputy Secretary.

[FR Doc. 02–25014 Filed 10–1–02; 8:45 am]

BILLING CODE 6717–01–P

DEPARTMENT OF ENERGY

Federal Energy Regulatory Commission

[Docket No. EL02–128–000]

Sithe New England Holdings, LLC v. ISO New England Inc.; Notice of Filing

September 26, 2002.

Take notice that on September 23, 2002, Sithe New England Holdings, LLC tendered for filing a complaint against ISO New England Inc., alleging violations of the Federal Power Act and the Commission's regulations.

Any person desiring to intervene or to protest this filing should file with the Federal Energy Regulatory Commission, 888 First Street, NE, Washington, DC 20426, in accordance with Rules 211 and 214 of the Commission's Rules of Practice and Procedure (18 CFR 385.211 and 385.214). Protests will be considered by the Commission in determining the appropriate action to be taken, but will not serve to make protestants parties to the proceeding. Any person wishing to become a party must file a motion to intervene. All such motions or protests should be filed on or before the comment date, and, to the extent applicable, must be served on the applicant and on any other person designated on the official service list. This filing is available for review at the Commission or may be viewed on the Commission's Web site at *http://www.ferc.gov*, using the ''FERRIS'' link. Enter the docket number excluding the last three digits in the docket number filed to access the document. For assistance, call (202) 502–8222 or TTY, (202) 502–8659. Protests and interventions may be filed electronically via the Internet in lieu of paper; *see* 18 CFR 385.2001(a)(1)(iii) and the instructions on the Commission's Web site under the ''e-Filing'' link. The Commission strongly encourages electronic filings. *Comment Date:* October 16, 2002.

Linwood A. Watson, Jr.,

Deputy Secretary.

[FR Doc. 02–25013 Filed 10–1–02; 8:45 am]

BILLING CODE 6717–01–P

DEPARTMENT OF ENERGY

Federal Energy Regulatory Commission

[Docket No. EF02–4011–000]

Southwestern Power Administration; Notice of Filing

September 26, 2002.

Take notice that the Secretary, U.S. Department of Energy on September 20, 2002, submitted to the Federal Energy Regulatory Commission (Commission) for confirmation and approval on a final basis, pursuant to the authority vested in the Commission by Delegation Order No. 00–037.00, effective December 6, 2001, the following Southwestern Power Administration (Southwestern) Integrated System rate schedules:

Rate Schedule P–02, Wholesale Rates for Hydro Peaking Power

Rate Schedule NFTS–02, Wholesale Rates for Non-Federal Transmission/Interconnection Facilities Service

Rate Schedule EE–02, Wholesale Rate for Excess Energy

The Integrated System (System) rate schedules were confirmed and approved on an interim basis by the Secretary in Rate Order No. SWPA–48 for the period October 1, 2002, through September 30, 2006, and have been submitted to the Commission for confirmation and approval on a final basis for the same period. The System rates will increase the annual revenue from $109,463,500 to $115,006,176 primarily to recover increased expenditures in operation and maintenance (O&M) and investment. In addition, an analysis of the Purchased Power Deferral Account indicates the need for an annual increase of $595,827 to recover the purchased energy costs. The total annual revenue increase will be $6,138,503, or 5.6 percent effective October 1, 2002. Southwestern has continued the rate structure that conforms with the intent of the Commission Order No. 888; consequently, the actual rate impact on each customer will vary based on the type of service requested and provided. The proposal also includes a continuation of the Administrator's Discretionary Purchased Power Adder Adjustment, to adjust the purchased power adder annually up to $0.0011 per kilowatt-hour as necessary, under a formula-type rate, with notification to the Commission.

The Secretary has also submitted for confirmation and approval on a final basis the previous extension of the Integrated System rates. The extension was confirmed and approved on an interim basis by the Deputy Secretary in Rate Order No. SWPA–45 effective October 1, 2001, through September 30, 2002.

Any person desiring to intervene or to protest this filing should file with the Federal Energy Regulatory Commission, 888 First Street, NE, Washington, DC 20426, in accordance with Rules 211 and 214 of the Commission's Rules of Practice and Procedure (18 CFR 385.211 and 385.214). Protests will be considered by the Commission in determining the appropriate action to be taken, but will not serve to make protestants parties to the proceeding. Any person wishing to become a party must file a motion to intervene. All such motions or protests should be filed on or before the comment date, and, to the extent applicable, must be served on the applicant and on any other person designated on the official service list. This filing is available for review at the Commission or may be viewed on the Commission's Web site at *http://www.ferc.gov*, using the ''FERRIS'' link. Enter the docket number excluding the last three digits in the docket number filed to access the document. For assistance, call (202) 502–8222 or TTY, (202) 502–8659. Protests and interventions may be filed electronically via the Internet in lieu of paper; *see* 18 CFR 385.2001(a)(1)(iii) and the instructions on the Commission's Web site under the ''e-Filing'' link. The Commission strongly encourages electronic filings. *Comment Date:* October 21, 2002.

Linwood A. Watson, Jr.,

Deputy Secretary.

[FR Doc. 02–25011 Filed 10–1–02; 8:45 am]

BILLING CODE 6717–01–P

DEPARTMENT OF ENERGY

Federal Energy Regulatory Commission

[Docket No. EF02–4021–000]

Southwestern Power Administration; Notice of Filing

September 26, 2002.

Take notice that the Secretary, U.S. Department of Energy, on September 20, 2002, submitted to the Federal Energy Regulatory Commission (FERC or Commission) for confirmation and approval on a final basis, pursuant to the authority vested in the FERC by Delegation Order No. 00–037.00, December 6, 2001, an annual power rate of $2,013,024 for the sale of power and energy by the Southwestern Power Administration (Southwestern) from the Sam Rayburn Dam Project (Rayburn) to

Sam Rayburn Dam Electric Cooperative, Inc. (SRDEC). The rate was confirmed and approved on an interim basis by the Secretary in Rate Order No. SWPA–49 for the period October 1, 2002, through September 30, 2006, and has been submitted to FERC for confirmation and approval on a final basis for the same period. The annual rate of $2,013,024 is based on the 2002 Revised Power Repayment Study for Rayburn and represents an annual decrease in revenue of $64,608, or 3.1 percent, the lowest possible rate required to meet cost recovery criteria.

This rate supersedes the annual power rate of $2,077,632, which FERC approved on a final basis October 22, 2001, under Docket No. EF01–4021–000 for the period October 1, 2001, through September 30, 2005.

Any person desiring to intervene or to protest this filing should file with the Federal Energy Regulatory Commission, 888 First Street, NE, Washington, DC 20426, in accordance with Rules 211 and 214 of the Commission's Rules of Practice and Procedure (18 CFR 385.211 and 385.214). Protests will be considered by the Commission in determining the appropriate action to be taken, but will not serve to make protestants parties to the proceeding. Any person wishing to become a party must file a motion to intervene. All such motions or protests should be filed on or before the comment date, and, to the extent applicable, must be served on the applicant and on any other person designated on the official service list. This filing is available for review at the Commission or may be viewed on the Commission's Web site at *http://www.ferc.gov*, using the ''FERRIS'' link. Enter the docket number excluding the last three digits in the docket number filed to access the document. For assistance, call (202) 502–8222 or TTY, (202) 502–8659. Protests and interventions may be filed electronically via the Internet in lieu of paper; *see* 18 CFR 385.2001(a)(1)(iii) and the instructions on the Commission's Web site under the ''e-Filing'' link. The Commission strongly encourages electronic filings. *Comment Date:* October 21, 2002.

Linwood A. Watson, Jr.,

Deputy Secretary.

[FR Doc. 02–25012 Filed 10–1–02; 8:45 am]

BILLING CODE 6717–01–P

DEPARTMENT OF ENERGY

Federal Energy Regulatory Commission

[Docket No. RP02–555–000]

Texas Eastern Transmission, LP; Notice of Tariff Filing

September 26, 2002.

Take notice that on September 24, 2002, Texas Eastern Transmission, LP (Texas Eastern) tendered for filing as part of its FERC Gas Tariff, Seventh Revised Volume No. 1, the following revised tariff sheets effective October 25, 2002:

First Revised Original Sheet No. 539

First Revised Sheet No. 540

Texas Eastern states that the purpose of this filing is to revise the capacity release provisions in section 3.14 of the General Terms and Conditions with the addition of a new Section 3.14(M) which sets forth its right to terminate temporary capacity releases by shippers who are not creditworthy or who have become non-creditworthy.

Texas Eastern states that copies of its filing have been mailed to all affected customers and interested state commissions.

Any person desiring to be heard or to protest said filing should file a motion to intervene or a protest with the Federal Energy Regulatory Commission, 888 First Street, NE., Washington, DC 20426, in accordance with sections 385.214 or 385.211 of the Commission's rules and regulations. All such motions or protests must be filed in accordance with section 154.210 of the Commission's regulations. Protests will be considered by the Commission in determining the appropriate action to be taken, but will not serve to make protestants parties to the proceedings. Any person wishing to become a party must file a motion to intervene. This filing is available for review at the Commission in the Public Reference Room or may be viewed on the Commission's Web site at *http://www.ferc.gov* using the ''FERRIS'' link. Enter the docket number excluding the last three digits in the docket number field to access the document. For Assistance, call (202)502–8222 or for TTY, (202) 502–8659. Comments, protests and interventions may be filed electronically via the Internet in lieu of paper. The Commission strongly encourages electronic filings. *See*, 18 CFR 385.2001(a)(1)(iii) and the instructions on the Commission's Web site under the ''e-Filing'' link.

Linwood A. Watson, Jr.,

Deputy Secretary.

[FR Doc. 02–25024 Filed 10–1–02; 8:45 am]

BILLING CODE 6717–01–P

DEPARTMENT OF ENERGY

Federal Energy Regulatory Commission

[Docket No. RP97–255–046]

TransColorado Gas Transmission Company; Notice of Negotiated Rate

September 26, 2002.

Take notice that on May 15, 2002, TransColorado Gas Transmission Company (TransColorado) tendered for filing an amended negotiated-rate contract with Western Gas Resources, Inc. (WGR).

TransColorado states that the filing is being pursuant to the Commission's April 25, 2002, letter order issued in Docket No. RP97–255–043.

In Docket No. RP97–255–043, TransColorado filed a negotiated-rate tariff filing to revise it Statement of Negotiated Rates to reflect the negotiated-rate contract with WGR. The Commission's April 25th order stated that the Commission found WGR's contact to contain a provision that constitutes a negotiated term and condition of service that may result in WGR receiving a different quality of service than other customers. TransColorado renegotiated the contract with WRG and removed the objectiable language. The renegotiated contract is included with this filing and has an effective date of April 1, 2002.

Any person desiring to be heard or to protest said filing should file a motion to intervene or a protest with the Federal Energy Regulatory Commission, 888 First Street, NE., Washington, DC 20426, in accordance with sections 385.214 or 385.211 of the Commission's rules and regulations. All such motions or protests must be filed on or before October 3, 2002. Protests will be considered by the Commission in determining the appropriate action to be taken, but will not serve to make protestants parties to the proceedings. Any person wishing to become a party must file a motion to intervene. This filing is available for review at the Commission in the Public Reference Room or may be viewed on the Commission's Web site at *http://www.ferc.gov* using the ''FERRIS'' link. Enter the docket number excluding the last three digits in the docket number

field to access the document. For Assistance, call (202)502–8222 or for TTY, (202) 502–8659. Comments, protests and interventions may be filed electronically via the Internet in lieu of paper. The Commission strongly encourages electronic filings. *See*, 18 CFR 385.2001(a)(1)(iii) and the instructions on the Commission's Web site under the ''e-Filing'' link.

Linwood A. Watson, Jr.,

Deputy Secretary.

[FR Doc. 02–25028 Filed 10–1–02; 8:45 am]

BILLING CODE 6717–01–P

DEPARTMENT OF ENERGY

Federal Energy Regulatory Commission

[Project No. 11886–002]

Western Land Investments, Inc.; Notice of Surrender of Preliminary Permit

September 26, 2002.

Take notice that Western Land Investments, Inc., permittee for the proposed River Side Project, has requested that its preliminary permit be terminated. The permit was issued on June 22, 2001, and would have expired on May 31, 2004. The project would have been located on the Snake River-Boulder Rapids Reach in Twin Falls and Gooding Counties, Idaho.

The permittee filed the request on August 5, 2002, and the preliminary permit for Project No. 11886 shall remain in effect through the thirtieth day after issuance of this notice unless that day is a Saturday, Sunday, or holiday as described in 18 CFR 385.2007, in which case the permit shall remain in effect through the first business day following that day. New applications involving this project site, to the extent provided for under 18 CFR part 4, may be filed on the next business day.

Linwood A. Watson, Jr.,

Deputy Secretary.

[FR Doc. 02–25016 Filed 10–1–02; 8:45 am]

BILLING CODE 6717–01–P

DEPARTMENT OF ENERGY

Federal Energy Regulatory Commission

[Docket No. RP02–440–001]

Wyoming Interstate Company, Ltd.; Notice of Compliance Filing

September 25, 2002.

Take notice that on September 23, 2002, Wyoming Interstate Company, Ltd. (WIC) tendered for filing as part of its FERC Gas Tariff, Second Revised Volume No. 2, the following tariff sheets, with an effective date of October 1, 2002:

Substitute Original Sheet No. 36C.01
Ninth Revised Sheet No. 37C
First Revised Sheet No. 37C.01
Fifth Revised Sheet No. 37D

WIC states that this filing is being submitted to revise the North American Energy Standards Board (NAESB) Standards contained in WIC's Tariff in compliance with the Commission's order in this proceeding.

Any person desiring to protest said filing should file a protest with the Federal Energy Regulatory Commission, 888 First Street, NE, Washington, DC 20426, in accordance with Section 385.211 of the Commission's Rules and Regulations. All such protests must be filed in accordance with Section 154.210 of the Commission's Regulations. Protests will be considered by the Commission in determining the appropriate action to be taken, but will not serve to make protestants parties to the proceedings. This filing is available for review at the Commission in the Public Reference Room or may be viewed on the Commission's Web site at *http://www.ferc.gov* using the ''FERRIS'' link. Enter the docket number excluding the last three digits in the docket number field to access the document. For Assistance, call (202)502–8222 or for TTY, (202) 502–8659. The Commission strongly encourages electronic filings. *See*, 18 CFR 385.2001(a)(1)(iii) and the instructions on the Commission's Web site under the ''e-Filing'' link.

Linwood A. Watson, Jr.,

Deputy Secretary.

[FR Doc. 02–24886 Filed 10–1–02; 8:45 am]

BILLING CODE 6717–01–P

DEPARTMENT OF ENERGY

Federal Energy Regulatory Commission

[Project No. 11077–022, Alaska]

Goat Lake Hydro Inc.; Notice of Availability of Final Environmental Assessment

September 26, 2002.

In accordance with the National Environmental Policy Act of 1969 and the Federal Energy Regulatory Commission's (Commission) regulations, 18 CFR part 380 (Order No. 486, 52 FR 47897), the Office of Energy Projects has reviewed the application for license amendment for the Goat Lake Hydroelectric Project, located on Pitchfork Falls, near the town of Skagway, in the First Judicial District, Alaska, and has prepared a Final Environmental Assessment (FEA) for the project. The project occupies lands of the Tongass National Forest.

The FEA contains the staff's analysis of the potential environmental impacts of the project and concludes that licensing the project, with appropriate environmental protective measures, would not constitute a major federal action that would significantly affect the quality of the human environment.

A copy of the FEA is available for review at the Commission in the Public Reference Room or may be viewed on the Commission's Web site at *http://www.ferc.gov* using the ''FERRIS'' link. Enter the docket number excluding the last three digits in the docket number field to access the document. For assistance, call (202) 502–8222 or for TTY, (202) 502–8659.

For further information, contact Michael Henry at (503) 944–6762.

Linwood A. Watson, Jr.,

Deputy Secretary.

[FR Doc. 02–25015 Filed 10–1–02; 8:45 am]

BILLING CODE 6717–01–P

DEPARTMENT OF ENERGY

Federal Energy Regulatory Commission

[Project No. 1354–005–California]

Pacific Gas & Electric Company; Notice of Availability of Supplemental Environmental Assessment

September 26, 2002.

In accordance with the National Environmental Policy Act of 1969 and the Federal Energy Regulatory Commission (Commission) regulations, 18 CFR part 380 (FERC Order No. 486, 52 FR 47897), the Office of Energy Projects has reviewed the application for a new license for the Crane Valley Project. Commission staff, with the U.S. Forest Service as a cooperating agency, has prepared a supplemental environmental assessment (SEA) for the project. The project is located on Willow Creek, South Fork Willow Creek, North Fork Willow Creek, Chilkoot Creek, and Chiquito Creek in the San Joaquin River Basin in Madera County, California.

The SEA contains our analysis of the potential environmental effects of the existing project and concludes that licensing the project, with appropriate environmental measures, would not constitute a major federal action

significantly affecting the quality of the human environment.

A copy of the SEA is on file with the Commission and is available for public inspection at the Commission in the Public Reference Room, or it may be viewed on the Commission's website at *http://www.ferc.gov* using the ''FERRIS'' link. Enter the docket number, excluding the last three digits in the docket number field, to access the document. For assistance, call (202) 502–8222 or (202) 502–8659 (for TTY).

Any comments should be filed within 45 days from the date of this notice and should be addressed to Magalie R. Salas, Secretary, Federal Energy Regulatory Commission, 888 First Street, NE., Washington, DC 20426. Please affix ''Crane Valley Project No. 1354–005,'' to all comments. Comments may be filed electronically via the Internet in lieu of paper. *See* 18 CFR 385.2001(a)(1)(iii) and the instructions on the Commission's website at *http://www.ferc.gov* under the ''e-Filing'' link.

For further information, please contact Jim Fargo at (202) 502–6095 or at *james.fargo@ferc.gov*.

Linwood A. Watson, Jr.,

Deputy Secretary.

[FR Doc. 02–25017 Filed 10–1–02; 8:45 am]

BILLING CODE 6717–01–P

DEPARTMENT OF ENERGY

Federal Energy Regulatory Commission

[Project No. 2042–013, Washington, Idaho]

Public Utility District No. 1 of Pend Oreille County; Notice of Intention To Hold Puclic Meetings for Discussion of the Draft Environmental Impact Statement for the Box Canyon Hydroelectric Project

September 25, 2002.

On September 9, 2002, the Commission staff mailed the Box Canyon Project Draft Environmental Impact Statement (DEIS) to the Environmental Protection Agency, resource and land management agencies, and interested organizations and individuals.

The DEIS was noticed in the **Federal Register** on September 20, 2002 (61 FR 6243), and comments are due November 19, 2002. The DEIS evaluates the environmental consequences of the construction, operation, and maintenance of the Box Canyon Project in Washington and Idaho. About 709 acres within the project boundary are located on lands of the United States, including Kalispel Indian Reservation (493 acres), U.S. Forest Service Colville National forest (182.93 acres), U.S. Department of energy, Bonneville Power Administration (24.14 acres) U.S. Fish and Wildlife Service (2.45 acres), U.S. Army Corps of Engineers (5.29 acres, and U.S. Bureau of Land Management (1.44 acres). The DEIS also evaluates the environmental effects of implementing the applicant's proposals, agency and tribal recommendations, staff's recommendations, and the no-action alternative.

Two public meetings, which will be recorded by an official stenographer, are scheduled:

Date	Time	Location
Monday, October 21, 2002	7–10 p.m	Newport High School Cafeteria, 1400 West 5th Street, Newport, WA.
Tuesday, October 22, 2002	2–5 p.m	Airport Ramada Inn, Spokane International Airport, Spokane, WA.

At these meetings, resource agency personnel and other interested persons will have the opportunity to provide oral and written comments and recommendations regarding the DEIS for the Commission's public record.

For further information, please contact Timothy Welch, at (202) 502–8760, *Timothy.Welch@FERC.gov*, Federal Energy Regulatory Commission, Office of Energy Projects, 888 First St. NE., Washington, DC 20426.

Linwood A. Watson, Jr.,

Deputy Secretary.

[FR Doc. 02–24882 Filed 10–1–02; 8:45 am]

BILLING CODE 6717–01–P

DEPARTMENT OF ENERGY

Federal Energy Regulatory Commission

[Project No. 11887–000]

Notice of Application Accepted for Filing and Soliciting Comments, Motions to Intervene, and Protests

September 25, 2002.

Take notice that the following hydroelectric application has been filed with the Commission and is available for public inspection:

a. *Type of Application:* Preliminary Permit.

b. *Project No:* 12281–000.

c. *Date Filed:* June 26, 2002.

d. *Applicant:* Wilkins Hydro, LLC.

e. *Name of Project:* Glover Wilkins Lock & Dam Hydroelectric Project.

f. *Location:* The proposed project would be located on an existing dam owned by the U.S. Army Corps of Engineers, on the Tombigbee River in Monroe County, Mississippi.

g. *Filed Pursuant to:* Federal Power Act, 16 U.S.C. 791(a)-825(r).

h. *Applicant Contact:* Mr. Brent L. Smith, Northwest Power Services, Inc., P.O. Box 535, Rigby, ID 83442, (208) 745–0834.

i. *FERC Contact:* Any questions on this notice should be addressed to Mr. Lynn R. Miles, Sr. at (202) 502–8763.

j. Deadline for filing motions to intervene, protests and comments: 60 days from the issuance date of this notice.

All documents (original and eight copies) should be filed with: Magalie R. Salas, Secretary, Federal Energy Regulatory Commission, 888 First Street, NE, Washington, DC 20426. Comments, protests and interventions may be filed electronically via the Internet in lieu of paper; see 18 CFR 385.2001(a)(1)(iii) and the instructions on the Commission's web site under the ''e-Filing'' link. Please include the project number (P–12281–000) on any comments or motions filed.

The Commission's rules of practice and procedure require all interveners filing documents with the Commission to serve a copy of that document on each person in the official service list for the project. Further, if an intervener files comments or documents with the Commission relating to the merits of an issue that may affect the responsibilities

of a particular resource agency, they must also serve a copy of the document on that resource agency.

k. Description of Project: The proposed run-of-river project using the existing Corps' Glover Wilkins Lock & Dam would consist of: (1) A 108-inch-diameter, 100-foot-long steel penstock, (2) a powerhouse containing one generating unit with an installed capacity of 2.25 MW, (3) a 15-kv transmission line approximately 1 mile long, and (4) appurtenant facilities. The project would have an annual generation of 18 GWh.

l. This filing is available for review at the Commission in the Public Reference Room or may be viewed on the Commission's web site at *http://www.ferc.gov* using the ''FERRIS'' link. Enter the docket number excluding the last three digits in the docket number field to access the document. For assistance, call (202) 502–8222 or for TTY, (202) 502–8659. A copy is also available for inspection and reproduction at Wilkins Hydro, LLC, 975 South State Highway, Logan, UT 84321, (435) 752–2580.

m. Competing Preliminary Permit—Anyone desiring to file a competing application for preliminary permit for a proposed project must submit the competing application itself, or a notice of intent to file such an application, to the Commission on or before the specified comment date for the particular application (see 18 CFR 4.36). Submission of a timely notice of intent allows an interested person to file the competing preliminary permit application no later than 30 days after the specified comment date for the particular application. A competing preliminary permit application must conform with 18 CFR 4.30(b) and 4.36.

n. Competing Development Application—Any qualified development applicant desiring to file a competing development application must submit to the Commission, on or before a specified comment date for the particular application, either a competing development application or a notice of intent to file such an application. Submission of a timely notice of intent to file a development application allows an interested person to file the competing application no later than 120 days after the specified comment date for the particular application. A competing license application must conform with 18 CFR 4.30(b) and 4.36.

o. Notice of Intent—A notice of intent must specify the exact name, business address, and telephone number of the prospective applicant, and must include an unequivocal statement of intent to submit, if such an application may be filed, either a preliminary permit application or a development application (specify which type of application). A notice of intent must be served on the applicant(s) named in this public notice.

p. Proposed Scope of Studies under Permit—A preliminary permit, if issued, does not authorize construction. The term of the proposed preliminary permit would be 36 months. The work proposed under the preliminary permit would include economic analysis, preparation of preliminary engineering plans, and a study of environmental impacts. Based on the results of these studies, the Applicant would decide whether to proceed with the preparation of a development application to construct and operate the project.

q. Comments, Protests, or Motions to Intervene—Anyone may submit comments, a protest, or a motion to intervene in accordance with the requirements of rules of practice and procedure, 18 CFR 385.210, .211, .214. In determining the appropriate action to take, the Commission will consider all protests or other comments filed, but only those who file a motion to intervene in accordance with the Commission's Rules may become a party to the proceeding. Any comments, protests, or motions to intervene must be received on or before the specified comment date for the particular application.

r. Filing and Service of Responsive Documents—Any filings must bear in all capital letters the title ''COMMENTS'', ''NOTICE OF INTENT TO FILE COMPETING APPLICATION'', ''COMPETING APPLICATION'', ''PROTEST'', ''MOTION TO INTERVENE'', as applicable, and the Project Number of the particular application to which the filing refers. Any of the above-named documents must be filed by providing the original and the number of copies provided by the Commission's regulations to: The Secretary, Federal Energy Regulatory Commission, 888 First Street, NE., Washington, DC 20426. An additional copy must be sent to Director, Division of Hydropower Administration and Compliance, Federal Energy Regulatory Commission, at the above-mentioned address. A copy of any notice of intent, competing application or motion to intervene must also be served upon each representative of the Applicant specified in the particular application.

s. Agency Comments—Federal, State, and local agencies are invited to file comments on the described application. A copy of the application may be obtained by agencies directly from the Applicant. If an agency does not file comments within the time specified for filing comments, it will be presumed to have no comments. One copy of an agency's comments must also be sent to the Applicant's representatives.

Linwood A. Watson, Jr.,

Deputy Secretary.

[FR Doc. 02–24867 Filed 10–1–02; 8:45 am]

BILLING CODE 6717–01–P

DEPARTMENT OF ENERGY

Federal Energy Regulatory Commission

Notice of Application Accepted for Filing and Soliciting Comments, Protests, and Motions To Intervene

September 25, 2002.

Take notice that the following hydroelectric application has been filed with the Commission and is available for public inspection: a. *Type of Application:* Preliminary Permit. b. *Project No.:* 12213–000. c. *Date filed:* June 4, 2002. d. *Applicant:* Hugo Hydro, LLC. e. *Name and Location of Project:* The Hugo Dam Hydroelectric Project would be located on the Kiamichi River in Choctaw County, Oklahoma. The proposed project would utilize an existing dam administered by the U.S. Army Corps of Engineers (Corps). f. *Filed Pursuant to:* Federal Power Act, 16 U.S.C. 791(a)—825(r). g. *Applicant contact:* Mr. Brent L. Smith, Northwest Power Services, Inc., P.O. Box 535, Rigby, ID 83442, (208) 745–0834, fax (208) 745–0835. h. *FERC Contact:* Tom Papsidero, (202) 502–6002. i. Deadline for filing comments, protests, and motions to intervene: 60 days from the issuance date of this notice.

All documents (original and eight copies) should be filed with Magalie R. Salas, Secretary, Federal Energy Regulatory Commission, 888 First Street, NE, Washington, DC 20426. Comments, protests and interventions may be filed electronically via the Internet in lieu of paper; see 18 CFR 385.2001(a)(1)(iii) and the instructions on the Commission's web site under the ''e-Filing'' link. The Commission strongly encourages electronic filings. Please include the project number (P–12213–000) on any comments or motions filed.

The Commission's Rules of Practice and Procedure require all interveners filing documents with the Commission to serve a copy of that document on each person in the official service list for the project. Further, if an intervener files comments or documents with the Commission relating to the merits of an

issue that may affect the responsibilities of a particular resource agency, they must also serve a copy of the document on that resource agency. j. Description of Project: The proposed project, using the Corps' existing Hugo Dam and Reservoir, would consist of: (1) A proposed 200-foot-long, 10-foot-diameter penstock, (2) a proposed powerhouse containing one generating unit with an installed capacity of 3 megawatts, (3) a proposed 1-mile-long, 15-kv transmission line, and (4) appurtenant facilities. The project would operate in a run-of-river mode and would have an average annual generation of 13.5 GWh. k. This filing is available for review at the Commission in the Public Reference Room or may be viewed on the Commission's website at *http://www.ferc.gov* using the ''FERRIS'' link. Enter the docket number excluding the last three digits in the docket number field to access the document. For assistance, call (202) 502–8222 or TTY, (202) 502–8659. A copy is also available for inspection and reproduction at Hugo Hydro, LLC, 975 South State Highway, Logan, UT 84321, (435) 752–2580. l. Competing Preliminary Permit—Anyone desiring to file a competing application for preliminary permit for a proposed project must submit the competing application itself, or a notice of intent to file such an application, to the Commission on or before the specified comment date for the particular application (see 18 CFR 4.36). Submission of a timely notice of intent allows an interested person to file the competing preliminary permit application no later than 30 days after the specified comment date for the particular application. A competing preliminary permit application must conform with 18 CFR 4.30(b) and 4.36. m. Competing Development Application—Any qualified development applicant desiring to file a competing development application must submit to the Commission, on or before a specified comment date for the particular application, either a competing development application or a notice of intent to file such an application. Submission of a timely notice of intent to file a development application allows an interested person to file the competing application no later than 120 days after the specified comment date for the particular application. A competing license application must conform with 18 CFR 4.30(b) and 4.36. n. Notice of Intent—A notice of intent must specify the exact name, business address, and telephone number of the prospective applicant, and must include an unequivocal statement of intent to submit, if such an application may be filed, either a preliminary permit application or a development application (specify which type of application). A notice of intent must be served on the applicant(s) named in this public notice. o. Proposed Scope of Studies under Permit—A preliminary permit, if issued, does not authorize construction. The term of the proposed preliminary permit would be 36 months. The work proposed under the preliminary permit would include economic analysis, preparation of preliminary engineering plans, and a study of environmental impacts. Based on the results of these studies, the Applicant would decide whether to proceed with the preparation of a development application to construct and operate the project. p. Comments, Protests, or Motions to Intervene—Anyone may submit comments, a protest, or a motion to intervene in accordance with the requirements of Rules of Practice and Procedure, 18 CFR 385.210, .211, .214. In determining the appropriate action to take, the Commission will consider all protests or other comments filed, but only those who file a motion to intervene in accordance with the Commission's Rules may become a party to the proceeding. Any comments, protests, or motions to intervene must be received on or before the specified comment date for the particular application. q. Filing and Service of Responsive Documents—Any filings must bear in all capital letters the title ''COMMENTS'', ''NOTICE OF INTENT TO FILE COMPETING APPLICATION'', ''COMPETING APPLICATION'', ''PROTEST'', or ''MOTION TO INTERVENE'', as applicable, and the Project Number of the particular application to which the filing refers. Any of the above-named documents must be filed by providing the original and the number of copies provided by the Commission's regulations to: The Secretary, Federal Energy Regulatory Commission, 888 First Street, NE, Washington, DC 20426. An additional copy must be sent to Director, Division of Hydropower Administration and Compliance, Federal Energy Regulatory Commission, at the above-mentioned address. A copy of any notice of intent, competing application or motion to intervene must also be served upon each representative of the Applicant specified in the particular application. r. Agency Comments—Federal, state, and local agencies are invited to file comments on the described application. A copy of the application may be obtained by agencies directly from the Applicant. If an agency does not file comments within the time specified for filing comments, it will be presumed to have no comments. One copy of an agency's comments must also be sent to the Applicant's representatives.

Linwood A. Watson, Jr.,

Deputy Secretary.

[FR Doc. 02–24868 Filed 10–1–02; 8:45 am]

BILLING CODE 6717–01–P

DEPARTMENT OF ENERGY

Federal Energy Regulatory Commission

Notice of Application Accepted for Filing and Soliciting Comments, Protests, and Motions To Intervene

September 25, 2002.

Take notice that the following hydroelectric application has been filed with the Commission and is available for public inspection:

a. *Type of Application*: Preliminary Permit.

b. *Project No.*: 12223–000.

c. *Date filed*: June 17, 2002.

d. *Applicant*: Dierks Hydro, LLC.

e. *Name and Location of Project*: The Dierks Dam Project would be located on the Saline River in Sevier County, Arkansas. The proposed project would be located on an existing dam administered by the U.S. Corps of Engineers (Corps).

f. *Filed Pursuant to*: Federal Power Act, 16 U.S.C. §§ 791(a)–825(r).

g. *Applicant contact*: Mr. Brent L. Smith, Northwest Power Services, Inc., P.O. Box 535, Rigby, ID 83442, (208) 745–0834, Fax (208) 745–0835.

h. *FERC Contact*: Tom Papsidero, (202) 502–6002.

i. *Deadline for filing comments, protests, and motions to intervene*: 60 days from the issuance date of this notice.

All documents (original and eight copies) should be filed with Magalie R. Salas, Secretary, Federal Energy Regulatory Commission, 888 First Street, NE., Washington, DC 20426. Comments, protests and interventions may be filed electronically via the Internet in lieu of paper; see 18 CFR 385.2001(a)(1)(iii) and the instructions on the Commission's web site under the ''e-Filing'' link. The Commission strongly encourages electronic filings. Please include the project number (P–12223–000) on any comments or motions filed.

The Commission's rules of practice and procedure require all interveners filing documents with the Commission

to serve a copy of that document on each person in the official service list for the project. Further, if an intervener files comments or documents with the Commission relating to the merits of an issue that may affect the responsibilities of a particular resource agency, they must also serve a copy of the document on that resource agency.

j. Description of Project: The proposed project would utilize the existing Corps' Dierks Dam and Reservoir and would consist of: (1) a proposed 200-foot-long, 6-foot-diameter penstock, (2) a proposed powerhouse containing one generating unit with an installed capacity of 2 megawatts, (3) a proposed 5-mile-long, 25-kv transmission line, and (4) appurtenant facilities. The project would operate in a run-of-river mode and would have an average annual generation of 18 GWh.

k. This filing is available for review at the Commission in the Public Reference Room or may be viewed on the Commission's website at *http://www.ferc.gov* using the ''FERRIS'' link. Enter the docket number excluding the last three digits in the docket number field to access the document. For assistance, call (202) 502–8222 or TTY, (202) 502–8659. A copy is also available for inspection and reproduction at Dierks Hydro, LLC, 975 South State Highway, Logan, UT 84321, (435) 752–2580.

l. Competing Preliminary Permit—Anyone desiring to file a competing application for preliminary permit for a proposed project must submit the competing application itself, or a notice of intent to file such an application, to the Commission on or before the specified comment date for the particular application (see 18 CFR 4.36). Submission of a timely notice of intent allows an interested person to file the competing preliminary permit application no later than 30 days after the specified comment date for the particular application. A competing preliminary permit application must conform with 18 CFR 4.30(b) and 4.36.

m. Competing Development Application—Any qualified development applicant desiring to file a competing development application must submit to the Commission, on or before a specified comment date for the particular application, either a competing development application or a notice of intent to file such an application. Submission of a timely notice of intent to file a development application allows an interested person to file the competing application no later than 120 days after the specified comment date for the particular application. A competing license application must conform with 18 CFR 4.30(b) and 4.36.

n. Notice of Intent—A notice of intent must specify the exact name, business address, and telephone number of the prospective applicant, and must include an unequivocal statement of intent to submit, if such an application may be filed, either a preliminary permit application or a development application (specify which type of application). A notice of intent must be served on the applicant(s) named in this public notice.

o. Proposed Scope of Studies under Permit—A preliminary permit, if issued, does not authorize construction. The term of the proposed preliminary permit would be 36 months. The work proposed under the preliminary permit would include economic analysis, preparation of preliminary engineering plans, and a study of environmental impacts. Based on the results of these studies, the Applicant would decide whether to proceed with the preparation of a development application to construct and operate the project.

p. Comments, Protests, or Motions to Intervene—Anyone may submit comments, a protest, or a motion to intervene in accordance with the requirements of rules of practice and procedure, 18 CFR 385.210, .211, .214. In determining the appropriate action to take, the Commission will consider all protests or other comments filed, but only those who file a motion to intervene in accordance with the Commission's Rules may become a party to the proceeding. Any comments, protests, or motions to intervene must be received on or before the specified comment date for the particular application.

q. Filing and Service of Responsive Documents—Any filings must bear in all capital letters the title ''COMMENTS'', ''NOTICE OF INTENT TO FILE COMPETING APPLICATION'', ''COMPETING APPLICATION'', ''PROTEST'', or ''MOTION TO INTERVENE'', as applicable, and the Project Number of the particular application to which the filing refers. Any of the above-named documents must be filed by providing the original and the number of copies provided by the Commission's regulations to: The Secretary, Federal Energy Regulatory Commission, 888 First Street, NE, Washington, DC 20426. An additional copy must be sent to Director, Division of Hydropower Administration and Compliance, Federal Energy Regulatory Commission, at the above-mentioned address. A copy of any notice of intent, competing application or motion to intervene must also be served upon each representative of the Applicant specified in the particular application.

r. Agency Comments—Federal, state, and local agencies are invited to file comments on the described application. A copy of the application may be obtained by agencies directly from the Applicant. If an agency does not file comments within the time specified for filing comments, it will be presumed to have no comments. One copy of an agency's comments must also be sent to the Applicant's representatives.

Linwood A. Watson, Jr.,

Deputy Secretary.

[FR Doc. 02–24869 Filed 10–1–02; 8:45 am]

BILLING CODE 6717–01–P

DEPARTMENT OF ENERGY

Federal Energy Regulatory Commission

Notice of Application Accepted for Filing and Soliciting Comments, Protests, and Motions to Intervene

September 25, 2002.

Take notice that the following hydroelectric application has been filed with the Commission and is available for public inspection:

a. *Type of Application:* Preliminary Permit.

b. *Project No.:* 12239–000.

c. *Date filed:* June 17, 2002.

d. *Applicant:* Pactola Hydro, LLC.

e. *Name and Location of Project:* The Pactola Dam Hydroelectric Project would be located on Rapid Creek in Pennington County, South Dakota. The proposed project would utilize an existing dam administered by the U.S. Bureau or Reclamation (BOR) and would be partially located on lands administered by the BOR.

f. *Filed Pursuant to:* Federal Power Act, 16 U.S.C. §§ 791(a)–825(r).

g. *Applicant contact:* Mr. Brent L. Smith, Northwest Power Services, Inc., P.O. Box 535, Rigby, ID 83442, (208) 745–0834, fax (208) 745–0835.

h. *FERC Contact:* Tom Papsidero, (202) 502–6002.

i. *Deadline for filing comments, protests, and motions to intervene:* 60 days from the issuance date of this notice.

All documents (original and eight copies) should be filed with Magalie R. Salas, Secretary, Federal Energy Regulatory Commission, 888 First Street, NE, Washington, DC 20426. Comments, protests and interventions may be filed electronically via the Internet in lieu of paper; see 18 CFR 385.2001(a)(1)(iii) and the instructions on the Commission's web site under the

''e-Filing'' link. The Commission strongly encourages electronic filings. Please include the project number (P–12239–000) on any comments or motions filed.

The Commission's rules of practice and procedure require all interveners filing documents with the Commission to serve a copy of that document on each person in the official service list for the project. Further, if an intervener files comments or documents with the Commission relating to the merits of an issue that may affect the responsibilities of a particular resource agency, they must also serve a copy of the document on that resource agency.

j. *Description of Project:* The proposed project, using the BOR's existing Pactola Dam and Reservoir, would consist of: (1) A proposed 500-foot-long, 4-foot-diameter penstock, (2) a proposed powerhouse containing one generating unit with an installed capacity of 1.3 megawatts, (3) a proposed 5-mile-long, 15-kv transmission line, and (4) appurtenant facilities. The project would operate in a run-of-river mode and would have an average annual generation of 6 GWh.

k. This filing is available for review at the Commission in the Public Reference Room or may be viewed on the Commission's website at *http://www.ferc.gov* using the ''FERRIS'' link. Enter the docket number excluding the last three digits in the docket number field to access the document. For assistance, call (202) 502–8222 or for TTY, (202) 502–8659. A copy is also available for inspection and reproduction at Pactola Hydro, LLC, 975 South State Highway, Logan, UT 84321, (435) 752–2580.

l. Competing Preliminary Permit—Anyone desiring to file a competing application for preliminary permit for a proposed project must submit the competing application itself, or a notice of intent to file such an application, to the Commission on or before the specified comment date for the particular application (see 18 CFR 4.36). Submission of a timely notice of intent allows an interested person to file the competing preliminary permit application no later than 30 days after the specified comment date for the particular application. A competing preliminary permit application must conform with 18 CFR 4.30(b) and 4.36.

m. Competing Development Application—Any qualified development applicant desiring to file a competing development application must submit to the Commission, on or before a specified comment date for the particular application, either a competing development application or a notice of intent to file such an application. Submission of a timely notice of intent to file a development application allows an interested person to file the competing application no later than 120 days after the specified comment date for the particular application. A competing license application must conform with 18 CFR 4.30(b) and 4.36.

n. Notice of Intent—A notice of intent must specify the exact name, business address, and telephone number of the prospective applicant, and must include an unequivocal statement of intent to submit, if such an application may be filed, either a preliminary permit application or a development application (specify which type of application). A notice of intent must be served on the applicant(s) named in this public notice.

o. Proposed Scope of Studies under Permit—A preliminary permit, if issued, does not authorize construction. The term of the proposed preliminary permit would be 36 months. The work proposed under the preliminary permit would include economic analysis, preparation of preliminary engineering plans, and a study of environmental impacts. Based on the results of these studies, the Applicant would decide whether to proceed with the preparation of a development application to construct and operate the project.

p. Comments, Protests, or Motions to Intervene—Anyone may submit comments, a protest, or a motion to intervene in accordance with the requirements of Rules of Practice and Procedure, 18 CFR 385.210, .211, .214. In determining the appropriate action to take, the Commission will consider all protests or other comments filed, but only those who file a motion to intervene in accordance with the Commission's Rules may become a party to the proceeding. Any comments, protests, or motions to intervene must be received on or before the specified comment date for the particular application.

q. Filing and Service of Responsive Documents—Any filings must bear in all capital letters the title ''COMMENTS'', ''NOTICE OF INTENT TO FILE COMPETING APPLICATION'', ''COMPETING APPLICATION'', ''PROTEST'', or ''MOTION TO INTERVENE'', as applicable, and the Project Number of the particular application to which the filing refers. Any of the above-named documents must be filed by providing the original and the number of copies provided by the Commission's regulations to: The Secretary, Federal Energy Regulatory Commission, 888 First Street, NE, Washington, DC 20426. An additional copy must be sent to Director, Division of Hydropower Administration and Compliance, Federal Energy Regulatory Commission, at the above-mentioned address. A copy of any notice of intent, competing application or motion to intervene must also be served upon each representative of the Applicant specified in the particular application.

r. Agency Comments—Federal, state, and local agencies are invited to file comments on the described application. A copy of the application may be obtained by agencies directly from the Applicant. If an agency does not file comments within the time specified for filing comments, it will be presumed to have no comments. One copy of an agency's comments must also be sent to the Applicant's representatives.

Linwood A. Watson, Jr.,

Deputy Secretary.

[FR Doc. 02–24870 Filed 10–1–02; 8:45 am]

BILLING CODE 6717–01–P

DEPARTMENT OF ENERGY

Federal Energy Regulatory Commission

Notice of Application Accepted for Filing and Soliciting Comments, Protests, and Motions To Intervene

September 25, 2002.

Take notice that the following hydroelectric application has been filed with the Commission and is available for public inspection:

a. *Type of Application:* Preliminary Permit.

b. *Project No.:* 12250–000.

c. *Date filed:* June 18, 2002.

d. *Applicant:* Wesley E. Seale Hydro, LLC.

e. *Name and Location of Project:* The Wesley E. Seale Dam Hydroelectric Project would be located on the Nueces River in Jim Wells County, Texas. The proposed project would be located on an existing dam owned by the City of Corpus Cristi and would not occupy any federal lands or facilities.

f. *Filed Pursuant to:* Federal Power Act, 16 U.S.C. §§ 791(a)–825(r).

g. *Applicant contact:* Mr. Brent L. Smith, Northwest Power Services, Inc., P.O. Box 535, Rigby, ID 83442, (208) 745–0834, fax (208) 745–0835.

h. *FERC Contact:* Tom Papsidero, (202) 502–6002.

i. *Deadline for filing comments, protests, and motions to intervene:* 60 days from the issuance date of this notice.

All documents (original and eight copies) should be filed with Magalie R.

Salas, Secretary, Federal Energy Regulatory Commission, 888 First Street, NE., Washington, DC 20426. Comments, protests and interventions may be filed electronically via the Internet in lieu of paper; see 18 CFR 385.2001(a)(1)(iii) and the instructions on the Commission's web site under the ''e-Filing'' link. The Commission strongly encourages electronic filings. Please include the project number (P–12250–000) on any comments or motions filed.

The Commission's rules of practice and procedure require all interveners filing documents with the Commission to serve a copy of that document on each person in the official service list for the project. Further, if an intervener files comments or documents with the Commission relating to the merits of an issue that may affect the responsibilities of a particular resource agency, they must also serve a copy of the document on that resource agency.

j. *Description of Project:* The proposed project would consist of: (1) An existing 81-foot-high, 5,980-foot-long concrete dam, (2) an existing impoundment, Lake Corpus Christi, with a surface area of 19,521 acres and a storage capacity of 531,000 acre-feet at normal maximum water surface elevation 93 feet, (3) a proposed 200-foot-long, 6.5-foot-diameter penstock, (4) a proposed powerhouse containing one generating unit with an installed capacity of 1.3 megawatts, (5) a proposed 1-mile-long, 15-kv transmission line, and (6) appurtenant facilities. The project would operate in a run-of-river mode and would have an average annual generation of 3.9 GWh.

k. This filing is available for review at the Commission in the Public Reference Room or may be viewed on the Commission's website at *http://www.ferc.gov* using the ''FERRIS'' link. Enter the docket number excluding the last three digits in the docket number field to access the document. For assistance, call (202) 502–8222 or TTY, (202) 502–8659. A copy is also available for inspection and reproduction at Wesley E. Seale Hydro, LLC, 975 South State Highway, Logan, UT 84321, (435) 752–2580.

l. Competing Preliminary Permit—Anyone desiring to file a competing application for preliminary permit for a proposed project must submit the competing application itself, or a notice of intent to file such an application, to the Commission on or before the specified comment date for the particular application (see 18 CFR 4.36). Submission of a timely notice of intent allows an interested person to file the competing preliminary permit application no later than 30 days after the specified comment date for the particular application. A competing preliminary permit application must conform with 18 CFR 4.30(b) and 4.36.

m. Competing Development Application—Any qualified development applicant desiring to file a competing development application must submit to the Commission, on or before a specified comment date for the particular application, either a competing development application or a notice of intent to file such an application. Submission of a timely notice of intent to file a development application allows an interested person to file the competing application no later than 120 days after the specified comment date for the particular application. A competing license application must conform with 18 CFR 4.30(b) and 4.36.

n. Notice of Intent—A notice of intent must specify the exact name, business address, and telephone number of the prospective applicant, and must include an unequivocal statement of intent to submit, if such an application may be filed, either a preliminary permit application or a development application (specify which type of application). A notice of intent must be served on the applicant(s) named in this public notice.

o. Proposed Scope of Studies under Permit—A preliminary permit, if issued, does not authorize construction. The term of the proposed preliminary permit would be 36 months. The work proposed under the preliminary permit would include economic analysis, preparation of preliminary engineering plans, and a study of environmental impacts. Based on the results of these studies, the Applicant would decide whether to proceed with the preparation of a development application to construct and operate the project.

p. Comments, Protests, or Motions to Intervene—Anyone may submit comments, a protest, or a motion to intervene in accordance with the requirements of Rules of Practice and Procedure, 18 CFR 385.210, .211, .214. In determining the appropriate action to take, the Commission will consider all protests or other comments filed, but only those who file a motion to intervene in accordance with the Commission's Rules may become a party to the proceeding. Any comments, protests, or motions to intervene must be received on or before the specified comment date for the particular application.

q. Filing and Service of Responsive Documents—Any filings must bear in all capital letters the title ''COMMENTS'', ''NOTICE OF INTENT TO FILE COMPETING APPLICATION'', ''COMPETING APPLICATION'', ''PROTEST'', or ''MOTION TO INTERVENE'', as applicable, and the Project Number of the particular application to which the filing refers. Any of the above-named documents must be filed by providing the original and the number of copies provided by the Commission's regulations to: The Secretary, Federal Energy Regulatory Commission, 888 First Street, NE, Washington, DC 20426. An additional copy must be sent to Director, Division of Hydropower Administration and Compliance, Federal Energy Regulatory Commission, at the above-mentioned address. A copy of any notice of intent, competing application or motion to intervene must also be served upon each representative of the Applicant specified in the particular application.

r. Agency Comments—Federal, state, and local agencies are invited to file comments on the described application. A copy of the application may be obtained by agencies directly from the Applicant. If an agency does not file comments within the time specified for filing comments, it will be presumed to have no comments. One copy of an agency's comments must also be sent to the Applicant's representatives.

Linwood A. Watson, Jr.,

Deputy Secretary.

[FR Doc. 02–24871 Filed 10–1–02; 8:45 am]

BILLING CODE 6717–01–P

DEPARTMENT OF ENERGY

Federal Energy Regulatory Commission

[Project No. 11887–000]

Notice of Application Accepted for Filing and Soliciting Comments, Motions To Intervene, and Protests

September 25, 2002.

Take notice that the following hydroelectric application has been filed with the Commission and is available for public inspection:

a. *Type of Application:* Preliminary Permit.

b. *Project No:* 12267–000.

c. *Date Filed:* June 24, 2002.

d. *Applicant:* MSR No. 27 Hydro, LLC.

e. *Name of Project:* Mississippi Lock & Dam No. 27 Hydroelectric Project.

f. *Location:* The proposed project would be located on an existing dam owned by the U.S. Army Corps of Engineers, on the Mississippi River in Madison County, Illinois.

g. *Filed Pursuant to:* Federal Power Act, 16 U.S.C. § § 791(a)–825(r).

h. *Applicant Contact:* Mr. Brent L. Smith, Northwest Power Services, Inc., P.O. Box 535, Rigby, ID 83442, (208) 745–0834.

i. *FERC Contact:* Any questions on this notice should be addressed to Mr. Lynn R. Miles, Sr. at (202) 502–8763.

j. *Deadline for filing motions to intervene, protests and comments:* 60 days from the issuance date of this notice.

All documents (original and eight copies) should be filed with: Magalie R. Salas, Secretary, Federal Energy Regulatory Commission, 888 First Street, NE., Washington, DC 20426. Comments, protests and interventions may be filed electronically via the Internet in lieu of paper; see 18 CFR 385.2001(a)(1)(iii) and the instructions on the Commission's web site under the ''e-Filing'' link. Please include the project number (P–12267–000) on any comments or motions filed.

The Commission's Rules of Practice and Procedure require all interveners filing documents with the Commission to serve a copy of that document on each person in the official service list for the project. Further, if an intervener files comments or documents with the Commission relating to the merits of an issue that may affect the responsibilities of a particular resource agency, they must also serve a copy of the document on that resource agency.

k. *Description of Project:* The proposed run-of-river project using the existing Corps' Mississippi Lock & Dam No. 27 would consist of: (1) Two 600-inch-diameter, 50-foot-long concrete penstocks, (2) a powerhouse containing two generating units with an installed capacity of 40 MW, (3) a 50-kv transmission line approximately 1 mile long, and (4) appurtenant facilities. The project would have an annual generation of 336 GWh.

l. This filing is available for review at the Commission in the Public Reference Room or may be viewed on the Commission's website at http://www.ferc.gov using the ''FERRIS'' link. Enter the docket number excluding the last three digits in the docket number field to access the document. For assistance, call (202) 502–8222 or for TTY, (202) 502–8659. A copy is also available for inspection and reproduction at the MSR No. 27 Hydro, LLC, 975 South State Highway, Logan, UT 84321, (435) 752–2580.

m. Competing Preliminary Permit—Anyone desiring to file a competing application for preliminary permit for a proposed project must submit the competing application itself, or a notice of intent to file such an application, to the Commission on or before the specified comment date for the particular application (see 18 CFR 4.36). Submission of a timely notice of intent allows an interested person to file the competing preliminary permit application no later than 30 days after the specified comment date for the particular application. A competing preliminary permit application must conform with 18 CFR 4.30(b) and 4.36.

n. Competing Development Application—Any qualified development applicant desiring to file a competing development application must submit to the Commission, on or before a specified comment date for the particular application, either a competing development application or a notice of intent to file such an application. Submission of a timely notice of intent to file a development application allows an interested person to file the competing application no later than 120 days after the specified comment date for the particular application. A competing license application must conform with 18 CFR 4.30(b) and 4.36.

o. Notice of Intent—A notice of intent must specify the exact name, business address, and telephone number of the prospective applicant, and must include an unequivocal statement of intent to submit, if such an application may be filed, either a preliminary permit application or a development application (specify which type of application). A notice of intent must be served on the applicant(s) named in this public notice.

p. Proposed Scope of Studies under Permit—A preliminary permit, if issued, does not authorize construction. The term of the proposed preliminary permit would be 36 months. The work proposed under the preliminary permit would include economic analysis, preparation of preliminary engineering plans, and a study of environmental impacts. Based on the results of these studies, the Applicant would decide whether to proceed with the preparation of a development application to construct and operate the project.

q. Comments, Protests, or Motions to Intervene—Anyone may submit comments, a protest, or a motion to intervene in accordance with the requirements of Rules of Practice and Procedure, 18 CFR 385.210, .211, .214. In determining the appropriate action to take, the Commission will consider all protests or other comments filed, but only those who file a motion to intervene in accordance with the Commission's Rules may become a party to the proceeding. Any comments, protests, or motions to intervene must be received on or before the specified comment date for the particular application.

r. Filing and Service of Responsive Documents—Any filings must bear in all capital letters the title ''COMMENTS'', ''NOTICE OF INTENT TO FILE COMPETING APPLICATION'', ''COMPETING APPLICATION'', ''PROTEST'', ''MOTION TO INTERVENE'', as applicable, and the Project Number of the particular application to which the filing refers. Any of the above-named documents must be filed by providing the original and the number of copies provided by the Commission's regulations to: The Secretary, Federal Energy Regulatory Commission, 888 First Street, NE., Washington, DC 20426. An additional copy must be sent to Director, Division of Hydropower Administration and Compliance, Federal Energy Regulatory Commission, at the above-mentioned address. A copy of any notice of intent, competing application or motion to intervene must also be served upon each representative of the Applicant specified in the particular application.

s. Agency Comments—Federal, state, and local agencies are invited to file comments on the described application. A copy of the application may be obtained by agencies directly from the Applicant. If an agency does not file comments within the time specified for filing comments, it will be presumed to have no comments. One copy of an agency's comments must also be sent to the Applicant's representatives.

Linwood A. Watson, Jr.,

Deputy Secretary.

[FR Doc. 02–24872 Filed 10–1–02; 8:45 am]

BILLING CODE 6717–01–P

DEPARTMENT OF ENERGY

Federal Energy Regulatory Commission

Notice of Application Accepted for Filing and Soliciting Comments, Protests, and Motions To Intervene

September 25, 2002.

Take notice that the following hydroelectric application has been filed with the Commission and is available for public inspection:

a. *Type of Application:* Preliminary Permit.

b. *Project No.:* 12268–000.

c. *Date filed:* June 24, 2002.

d. *Applicant:* Wappapello Hydro, LLC.

e. *Name and Location of Project:* The Wappapello Dam Hydroelectric Project

would be located on the St. Francis River in Wayne County, Missouri. The proposed project would utilize an existing dam administered by the U.S. Army Corps of Engineers.

f. *Filed Pursuant to:* Federal Power Act, 16 U.S.C. §§ 791(a)–825(r).

g. *Applicant contact:* Mr. Brent L. Smith, Northwest Power Services, Inc., P.O. Box 535, Rigby, ID 83442, Telephone (208) 745–0834.

h. *FERC Contact:* Tom Papsidero, (202) 502–6002.

i. *Deadline for filing comments, protests, and motions to intervene:* 60 days from the issuance date of this notice.

All documents (original and eight copies) should be filed with Magalie R. Salas, Secretary, Federal Energy Regulatory Commission, 888 First Street, NE., Washington, DC 20426. Comments, protests, and interventions may be filed electronically via the Internet in lieu of paper; see 18 CFR 385.2001(a)(1)(iii) and the instructions on the Commission's web site under the ''e-Filing'' link. The Commission strongly encourages electronic filings. Please include the project number (P–12268–000) on any comments or motions filed.

The Commission's rules of practice and procedure require all interveners filing documents with the Commission to serve a copy of that document on each person in the official service list for the project. Further, if an intervener files comments or documents with the Commission relating to the merits of an issue that may affect the responsibilities of a particular resource agency, they must also serve a copy of the document on that resource agency.

j. Description of Project: The proposed project, using the Corps' existing Wappapello Dam and Reservoir, would consist of: (1) A proposed 200-foot-long, 7-foot-diameter penstock, (2) a proposed powerhouse containing one generating unit with an installed capacity of 2.5 megawatts, (3) a proposed 1-mile-long, 25-kv transmission line, and (4) appurtenant facilities. The project would operate in a run-of-river mode and would have an average annual generation of 18.5 GWh.

k. This filing is available for review at the Commission in the Public Reference Room or may be viewed on the Commission's Web site at *http://www.ferc.gov* using the ''FERRIS'' link. Enter the docket number excluding the last three digits in the docket number field to access the document. For assistance, call (202) 502–8222 or for TTY, (202) 502–8659. A copy is also available for inspection and reproduction at Wappapello Hydro, LLC, 975 South State Highway, Logan, UT 84321, (435) 752–2580.

l. Competing Preliminary Permit—Anyone desiring to file a competing application for preliminary permit for a proposed project must submit the competing application itself, or a notice of intent to file such an application, to the Commission on or before the specified comment date for the particular application (see 18 CFR 4.36). Submission of a timely notice of intent allows an interested person to file the competing preliminary permit application no later than 30 days after the specified comment date for the particular application. A competing preliminary permit application must conform with 18 CFR 4.30(b) and 4.36.

m. Competing Development Application—Any qualified development applicant desiring to file a competing development application must submit to the Commission, on or before a specified comment date for the particular application, either a competing development application or a notice of intent to file such an application. Submission of a timely notice of intent to file a development application allows an interested person to file the competing application no later than 120 days after the specified comment date for the particular application. A competing license application must conform with 18 CFR 4.30(b) and 4.36.

n. Notice of Intent—A notice of intent must specify the exact name, business address, and telephone number of the prospective applicant, and must include an unequivocal statement of intent to submit, if such an application may be filed, either a preliminary permit application or a development application (specify which type of application). A notice of intent must be served on the applicant(s) named in this public notice.

o. Proposed Scope of Studies under Permit—A preliminary permit, if issued, does not authorize construction. The term of the proposed preliminary permit would be 36 months. The work proposed under the preliminary permit would include economic analysis, preparation of preliminary engineering plans, and a study of environmental impacts. Based on the results of these studies, the Applicant would decide whether to proceed with the preparation of a development application to construct and operate the project.

p. Comments, Protests, or Motions to Intervene—Anyone may submit comments, a protest, or a motion to intervene in accordance with the requirements of Rules of Practice and Procedure, 18 CFR 385.210, .211, .214. In determining the appropriate action to take, the Commission will consider all protests or other comments filed, but only those who file a motion to intervene in accordance with the Commission's Rules may become a party to the proceeding. Any comments, protests, or motions to intervene must be received on or before the specified comment date for the particular application.

q. Filing and Service of Responsive Documents—Any filings must bear in all capital letters the title ''COMMENTS'', ''NOTICE OF INTENT TO FILE COMPETING APPLICATION'', ''COMPETING APPLICATION'', ''PROTEST'', or ''MOTION TO INTERVENE'', as applicable, and the Project Number of the particular application to which the filing refers. Any of the above-named documents must be filed by providing the original and the number of copies provided by the Commission's regulations to: The Secretary, Federal Energy Regulatory Commission, 888 First Street, NE., Washington, DC 20426. An additional copy must be sent to Director, Division of Hydropower Administration and Compliance, Federal Energy Regulatory Commission, at the above-mentioned address. A copy of any notice of intent, competing application or motion to intervene must also be served upon each representative of the Applicant specified in the particular application.

r. Agency Comments—Federal, state, and local agencies are invited to file comments on the described application. A copy of the application may be obtained by agencies directly from the Applicant. If an agency does not file comments within the time specified for filing comments, it will be presumed to have no comments. One copy of an agency's comments must also be sent to the Applicant's representatives.

Linwood A. Watson, Jr.,

Deputy Secretary.

[FR Doc. 02–24873 Filed 10–1–02; 8:45 am]

BILLING CODE 6717–01–P

DEPARTMENT OF ENERGY

Federal Energy Regulatory Commission

[Project No. 11887–000]

Notice of Application Accepted for Filing and Soliciting Comments, Motions to Intervene, and Protests

September 25, 2002.

Take notice that the following hydroelectric application has been filed

with the Commission and is available for public inspection:

a. *Type of Application:* Preliminary Permit.

b. *Project No:* 12271–000.

c. *Date Filed:* June 25, 2002.

d. *Applicant:* Bevill Hydro, LLC.

e. *Name of Project:* Bevill Lock And Dam Hydroelectric Project.

f. *Location:* The proposed project would be located on an existing dam owned by the U.S. Army Corps of Engineers, on the Tombigbee River in Pickens County, Alabama.

g. *Filed Pursuant to:* Federal Power Act, 16 U.S.C. § § 791(a)–825(r).

h. *Applicant Contact:* Mr. Brent L. Smith, Northwest Power Services, Inc., P.O. Box 535, Rigby, ID 83442, (208) 745–0834.

i. *FERC Contact:* Any questions on this notice should be addressed to Mr. Lynn R. Miles, Sr. at (202) 502–8763.

j. *Deadline for filing motions to intervene, protests and comments:* 60 days from the issuance date of this notice.

All documents (original and eight copies) should be filed with: Magalie R. Salas, Secretary, Federal Energy Regulatory Commission, 888 First Street, NE., Washington, DC 20426. Comments, protests and interventions may be filed electronically via the Internet in lieu of paper; see 18 CFR 385.2001(a)(1)(iii) and the instructions on the Commission's web site under the ''e-Filing'' link. Please include the project number (P–12271–000) on any comments or motions filed.

The Commission's rules of practice and procedure require all interveners filing documents with the Commission to serve a copy of that document on each person in the official service list for the project. Further, if an intervener files comments or documents with the Commission relating to the merits of an issue that may affect the responsibilities of a particular resource agency, they must also serve a copy of the document on that resource agency.

k. *Description of Project:* The proposed run-of-river project using the existing Corps' Bevill Lock and Dam would consist of: (1) Two 156-inch-diameter, 50-foot-long concrete penstocks, (2) a powerhouse containing two generating units with a total installed capacity of 20 MW, (3) a 50-kv transmission line approximately 1 mile long, and (4) appurtenant facilities. The project would have an annual generation of 336 GWh.

l. This filing is available for review at the Commission in the Public Reference Room or may be viewed on the Commission's web site at *http://www.ferc.gov* using the ''FERRIS'' link. Enter the docket number excluding the last three digits in the docket number field to access the document. For assistance, call (202) 502–8222 or for TTY, (202) 502–8659. A copy is also available for inspection and reproduction at the Bevill Hydro, LLC, 975 South State Highway, Logan, UT, 84321, (435) 752–2580.

m. Competing Preliminary Permit—Anyone desiring to file a competing application for preliminary permit for a proposed project must submit the competing application itself, or a notice of intent to file such an application, to the Commission on or before the specified comment date for the particular application (see 18 CFR 4.36). Submission of a timely notice of intent allows an interested person to file the competing preliminary permit application no later than 30 days after the specified comment date for the particular application. A competing preliminary permit application must conform with 18 CFR 4.30(b) and 4.36.

n. Competing Development Application—Any qualified development applicant desiring to file a competing development application must submit to the Commission, on or before a specified comment date for the particular application, either a competing development application or a notice of intent to file such an application. Submission of a timely notice of intent to file a development application allows an interested person to file the competing application no later than 120 days after the specified comment date for the particular application. A competing license application must conform with 18 CFR 4.30(b) and 4.36.

o. Notice of Intent—A notice of intent must specify the exact name, business address, and telephone number of the prospective applicant, and must include an unequivocal statement of intent to submit, if such an application may be filed, either a preliminary permit application or a development application (specify which type of application). A notice of intent must be served on the applicant(s) named in this public notice.

p. Proposed Scope of Studies under Permit—A preliminary permit, if issued, does not authorize construction. The term of the proposed preliminary permit would be 36 months. The work proposed under the preliminary permit would include economic analysis, preparation of preliminary engineering plans, and a study of environmental impacts. Based on the results of these studies, the Applicant would decide whether to proceed with the preparation of a development application to construct and operate the project.

q. Comments, Protests, or Motions to Intervene—Anyone may submit comments, a protest, or a motion to intervene in accordance with the requirements of Rules of Practice and Procedure, 18 CFR 385.210, .211, .214. In determining the appropriate action to take, the Commission will consider all protests or other comments filed, but only those who file a motion to intervene in accordance with the Commission's rules may become a party to the proceeding. Any comments, protests, or motions to intervene must be received on or before the specified comment date for the particular application.

r. Filing and Service of Responsive Documents—Any filings must bear in all capital letters the title ''COMMENTS'', ''NOTICE OF INTENT TO FILE COMPETING APPLICATION'', ''COMPETING APPLICATION'', ''PROTEST'', ''MOTION TO INTERVENE'', as applicable, and the Project Number of the particular application to which the filing refers. Any of the above-named documents must be filed by providing the original and the number of copies provided by the Commission's regulations to: The Secretary, Federal Energy Regulatory Commission, 888 First Street, NE, Washington, DC 20426. An additional copy must be sent to Director, Division of Hydropower Administration and Compliance, Federal Energy Regulatory Commission, at the above-mentioned address. A copy of any notice of intent, competing application or motion to intervene must also be served upon each representative of the Applicant specified in the particular application.

s. Agency Comments—Federal, state, and local agencies are invited to file comments on the described application. A copy of the application may be obtained by agencies directly from the Applicant. If an agency does not file comments within the time specified for filing comments, it will be presumed to have no comments. One copy of an agency's comments must also be sent to the Applicant's representatives.

Linwood A. Watson, Jr.,

Deputy Secretary.

[FR Doc. 02–24874 Filed 10–1–02; 8:45 am]

BILLING CODE 6717–01–P

DEPARTMENT OF ENERGY

Federal Energy Regulatory Commission

Notice of Application Accepted for Filing and Soliciting Comments, Protests, and Motions To Intervene

September 25, 2002.

Take notice that the following hydroelectric application has been filed with the Commission and is available for public inspection:

a. *Type of Application:* Preliminary Permit.

b. *Project No.:* 12291–000.

c. *Date filed:* July 5, 2002.

d. *Applicant:* Beach City Hydro, LLC.

e. *Name and Location of Project:* The Beach City Dam Hydroelectric Project would be located on the Sugar Creek in Tuscarawas County, Ohio. The proposed project would utilize an existing dam administered by the U.S. Army Corps of Engineers (Corps).

f. *Filed Pursuant to:* Federal Power Act, 16 U.S.C. 791(a)–825(r).

g. *Applicant contact:* Mr. Brent L. Smith, Northwest Power Services, Inc., P.O. Box 535, Rigby, ID 83442, (208) 745–0834, fax (208) 745–0835.

h. *FERC Contact:* Tom Papsidero, (202) 502–6002.

i. *Deadline for filing comments, protests, and motions to intervene:* 60 days from the issuance date of this notice.

All documents (original and eight copies) should be filed with Magalie R. Salas, Secretary, Federal Energy Regulatory Commission, 888 First Street, NE, Washington, DC 20426. Comments, protests and interventions may be filed electronically via the Internet in lieu of paper; *see* 18 CFR 385.2001(a)(1)(iii) and the instructions on the Commission's Web site under the ''e-Filing'' link. The Commission strongly encourages electronic filings. Please include the project number (P–12291–000) on any comments or motions filed.

The Commission's Rules of Practice and Procedure require all interveners filing documents with the Commission to serve a copy of that document on each person in the official service list for the project. Further, if an intervener files comments or documents with the Commission relating to the merits of an issue that may affect the responsibilities of a particular resource agency, they must also serve a copy of the document on that resource agency.

j. *Description of Project:* The proposed project, using the Corps' existing Beach City Dam and Reservoir, would consist of: (1) A proposed 200-foot-long, 6-foot-diameter penstock, (2) a proposed powerhouse containing one generating unit with an installed capacity of 1 megawatt, (3) a proposed 1-mile-long, 15–kv transmission line, and (4) appurtenant facilities. The project would operate in a run-of-river mode and would have an average annual generation of 6 GWh.

k. This filing is available for review at the Commission in the Public Reference Room or may be viewed on the Commission's Web site at *http://www.ferc.gov* using the ''FERRIS'' link. Enter the docket number excluding the last three digits in the docket number field to access the document. For assistance, call (202) 502–8222 or TTY, (202) 502–8659. A copy is also available for inspection and reproduction at Beach City Hydro, LLC, 975 South State Highway, Logan, UT 84321, (435) 752–2580.

l. Competing Preliminary Permit—Anyone desiring to file a competing application for preliminary permit for a proposed project must submit the competing application itself, or a notice of intent to file such an application, to the Commission on or before the specified comment date for the particular application (*see* 18 CFR 4.36). Submission of a timely notice of intent allows an interested person to file the competing preliminary permit application no later than 30 days after the specified comment date for the particular application. A competing preliminary permit application must conform with 18 CFR 4.30(b) and 4.36.

m. Competing Development Application—Any qualified development applicant desiring to file a competing development application must submit to the Commission, on or before a specified comment date for the particular application, either a competing development application or a notice of intent to file such an application. Submission of a timely notice of intent to file a development application allows an interested person to file the competing application no later than 120 days after the specified comment date for the particular application. A competing license application must conform with 18 CFR 4.30(b) and 4.36.

n. Notice of Intent—A notice of intent must specify the exact name, business address, and telephone number of the prospective applicant, and must include an unequivocal statement of intent to submit, if such an application may be filed, either a preliminary permit application or a development application (specify which type of application). A notice of intent must be served on the applicant(s) named in this public notice.

o. Proposed Scope of Studies under Permit—A preliminary permit, if issued, does not authorize construction. The term of the proposed preliminary permit would be 36 months. The work proposed under the preliminary permit would include economic analysis, preparation of preliminary engineering plans, and a study of environmental impacts. Based on the results of these studies, the Applicant would decide whether to proceed with the preparation of a development application to construct and operate the project.

p. Comments, Protests, or Motions to Intervene—Anyone may submit comments, a protest, or a motion to intervene in accordance with the requirements of Rules of Practice and Procedure, 18 CFR 385.210, .211, .214. In determining the appropriate action to take, the Commission will consider all protests or other comments filed, but only those who file a motion to intervene in accordance with the Commission's Rules may become a party to the proceeding. Any comments, protests, or motions to intervene must be received on or before the specified comment date for the particular application.

q. Filing and Service of Responsive Documents—Any filings must bear in all capital letters the title ''COMMENTS'', ''NOTICE OF INTENT TO FILE COMPETING APPLICATION'', ''COMPETING APPLICATION'', ''PROTEST'', or ''MOTION TO INTERVENE'', as applicable, and the Project Number of the particular application to which the filing refers. Any of the above-named documents must be filed by providing the original and the number of copies provided by the Commission's regulations to: The Secretary, Federal Energy Regulatory Commission, 888 First Street, NE., Washington, DC 20426. An additional copy must be sent to Director, Division of Hydropower Administration and Compliance, Federal Energy Regulatory Commission, at the above-mentioned address. A copy of any notice of intent, competing application or motion to intervene must also be served upon each representative of the Applicant specified in the particular application.

r. Agency Comments—Federal, State, and local agencies are invited to file comments on the described application. A copy of the application may be obtained by agencies directly from the Applicant. If an agency does not file comments within the time specified for filing comments, it will be presumed to have no comments. One copy of an

agency's comments must also be sent to the Applicant's representatives.

Linwood A. Watson, Jr.,

Deputy Secretary.

[FR Doc. 02–24875 Filed 10–1–02; 8:45 am]

BILLING CODE 6717–01–P

DEPARTMENT OF ENERGY

Federal Energy Regulatory Commission

Notice of Application Accepted for Filing and Soliciting Comments, Motions To Intervene, and Protests

September 25, 2002.

Take notice that the following hydroelectric application has been filed with the Commission and is available for public inspection:

a. *Type of Application:* Preliminary Permit.

b. *Project No:* 12294–000.

c. *Date Filed:* July 5, 2002.

d. *Applicant:* Huntington Hydro, LLC.

e. *Name of Project:* Huntington Lake Dam Hydroelectric Project.

f. *Location:* The proposed project would be located on an existing dam owned by the U.S. Army Corps of Engineers, on the Wabash River in Huntington County, Indiana.

g. *Filed Pursuant to:* Federal Power Act, 16 U.S.C. 791(a)–825(r).

h. *Applicant Contact:* Mr. Brent L. Smith, Northwest Power Services, Inc., P.O. Box 535, Rigby, ID 83442, (208) 745–0834.

i. *FERC Contact:* Any questions on this notice should be addressed to Mr. Lynn R. Miles, Sr. at (202) 502–8763

j. *Deadline for filing motions to intervene, protests and comments:* 60 days from the issuance date of this notice.

All documents (original and eight copies) should be filed with: Magalie R. Salas, Secretary, Federal Energy Regulatory Commission, 888 First Street, NE., Washington, DC 20426. Comments, protests and interventions may be filed electronically via the Internet in lieu of paper; *see* 18 CFR 385.2001(a)(1)(iii) and the instructions on the Commission's Web site under the ''e-Filing'' link. Please include the project number (P–12294–000) on any comments or motions filed.

The Commission's Rules of Practice and Procedure require all interveners filing documents with the Commission to serve a copy of that document on each person in the official service list for the project. Further, if an intervener files comments or documents with the Commission relating to the merits of an issue that may affect the responsibilities of a particular resource agency, they must also serve a copy of the document on that resource agency.

k. *Description of Project:* The proposed run-of-river project using the existing Corps' Huntington Dam and Lake would consist of: (1) A 72-inch-diameter, 200-foot-long steel penstock, (2) a powerhouse containing one generating unit with an installed capacity of 1.8 MW, (3) a 15–kv transmission line approximately 2 miles long; and (4) appurtenant facilities. The project would have an annual generation of 7.8 GWh.

l. This filing is available for review at the Commission in the Public Reference Room or may be viewed on the Commission's Web site at *http://www.ferc.gov* using the ''FERRIS'' link. Enter the docket number excluding the last three digits in the docket number field to access the document. For assistance, call (202) 502–8222 or for TTY, (202) 502–8659. A copy is also available for inspection and reproduction at the Huntington Hydro, LLC, 975 South State Highway, Logan, UT, 84321, (435) 752–2580.

m. Competing Preliminary Permit—Anyone desiring to file a competing application for preliminary permit for a proposed project must submit the competing application itself, or a notice of intent to file such an application, to the Commission on or before the specified comment date for the particular application (*see* 18 CFR 4.36). Submission of a timely notice of intent allows an interested person to file the competing preliminary permit application no later than 30 days after the specified comment date for the particular application. A competing preliminary permit application must conform with 18 CFR 4.30(b) and 4.36.

n. Competing Development Application—Any qualified development applicant desiring to file a competing development application must submit to the Commission, on or before a specified comment date for the particular application, either a competing development application or a notice of intent to file such an application. Submission of a timely notice of intent to file a development application allows an interested person to file the competing application no later than 120 days after the specified comment date for the particular application. A competing license application must conform with 18 CFR 4.30(b) and 4.36.

o. Notice of Intent—A notice of intent must specify the exact name, business address, and telephone number of the prospective applicant, and must include an unequivocal statement of intent to submit, if such an application may be filed, either a preliminary permit application or a development application (specify which type of application). A notice of intent must be served on the applicant(s) named in this public notice.

p. Proposed Scope of Studies under Permit—A preliminary permit, if issued, does not authorize construction. The term of the proposed preliminary permit would be 36 months. The work proposed under the preliminary permit would include economic analysis, preparation of preliminary engineering plans, and a study of environmental impacts. Based on the results of these studies, the Applicant would decide whether to proceed with the preparation of a development application to construct and operate the project.

q. Comments, Protests, or Motions to Intervene—Anyone may submit comments, a protest, or a motion to intervene in accordance with the requirements of Rules of Practice and Procedure, 18 CFR 385.210, .211, .214. In determining the appropriate action to take, the Commission will consider all protests or other comments filed, but only those who file a motion to intervene in accordance with the Commission's Rules may become a party to the proceeding. Any comments, protests, or motions to intervene must be received on or before the specified comment date for the particular application.

r. Filing and Service of Responsive Documents—Any filings must bear in all capital letters the title ''COMMENTS'', ''NOTICE OF INTENT TO FILE COMPETING APPLICATION'', ''COMPETING APPLICATION'', ''PROTEST'', ''MOTION TO INTERVENE'', as applicable, and the Project Number of the particular application to which the filing refers. Any of the above-named documents must be filed by providing the original and the number of copies provided by the Commission's regulations to: The Secretary, Federal Energy Regulatory Commission, 888 First Street, NE., Washington, DC 20426. An additional copy must be sent to Director, Division of Hydropower Administration and Compliance, Federal Energy Regulatory Commission, at the above-mentioned address. A copy of any notice of intent, competing application or motion to intervene must also be served upon each representative of the Applicant specified in the particular application.

s. Agency Comments—Federal, state, and local agencies are invited to file comments on the described application. A copy of the application may be obtained by agencies directly from the

Applicant. If an agency does not file comments within the time specified for filing comments, it will be presumed to have no comments. One copy of an agency's comments must also be sent to the Applicant's representatives.

Linwood A. Watson, Jr.,

Deputy Secretary.

[FR Doc. 02–24876 Filed 10–1–02; 8:45 am]

BILLING CODE 6717–01–P

DEPARTMENT OF ENERGY

Federal Energy Regulatory Commission

Notice of Application Accepted for Filing and Soliciting Comments, Protests, and Motions To Intervene

September 25, 2002.

Take notice that the following hydroelectric application has been filed with the Commission and is available for public inspection:

a. *Type of Application:* Preliminary Permit.

b. *Project No.:* 12307–000.

c. *Date filed:* July 17, 2002.

d. *Applicant:* Universal Electric Power Corporation.

e. *Name and Location of Project:* The Monongahela L&D No. 4 Hydroelectric Project would be located on the Monongahela River in Westmoreland County, Pennsylvania. The proposed project would utilize an existing dam administered by the U.S. Army Corps of Engineers (Corps).

f. *Filed Pursuant to:* Federal Power Act, 16 U.S.C. 791(a)—825(r).

g. *Applicant contact:* Mr. Raymond Helter, Universal Electric Power Corporation, 1145 Highbrook Street, Akron, OH 44301, (330) 535–7115.

h. *FERC Contact:* Tom Papsidero, (202) 502–6002.

i. *Deadline for filing comments, protests, and motions to intervene:* 60 days from the issuance date of this notice.

All documents (original and eight copies) should be filed with Magalie R. Salas, Secretary, Federal Energy Regulatory Commission, 888 First Street, NE, Washington, DC 20426. Comments, protests, and interventions may be filed electronically via the Internet in lieu of paper; *see* 18 CFR 385.2001(a)(1)(iii) and the instructions on the Commission's Web site under the ''e-Filing'' link. The Commission strongly encourages electronic filings. Please include the project number (P–12307–000) on any comments or motions filed.

The Commission's Rules of Practice and Procedure require all interveners filing documents with the Commission to serve a copy of that document on each person in the official service list for the project. Further, if an intervener files comments or documents with the Commission relating to the merits of an issue that may affect the responsibilities of a particular resource agency, they must also serve a copy of the document on that resource agency.

j. *Description of Project:* The proposed project, using the Corps' existing Monongahela L&D No. 4 and Reservoir, would consist of: (1) Two proposed 40-foot-long, 10-foot-diameter penstocks, (2) a proposed powerhouse containing two generating units with a combined installed capacity of 4.1 megawatts, (3) a proposed 200-foot-long, 14.7–kv transmission line, and (4) appurtenant facilities. The project would operate in a run-of-river mode and would have an average annual generation of 25 GWh.

k. This filing is available for review at the Commission in the Public Reference Room or may be viewed on the Commission's Web site at *http://www.ferc.gov* using the ''FERRIS'' link. Enter the docket number excluding the last three digits in the docket number field to access the document. For assistance, call (202) 502–8222 or for TTY, (202) 502–8659. A copy is also available for inspection and reproduction at the applicant's address in item g above.

l. Competing Preliminary Permit—Anyone desiring to file a competing application for preliminary permit for a proposed project must submit the competing application itself, or a notice of intent to file such an application, to the Commission on or before the specified comment date for the particular application (*see* 18 CFR 4.36). Submission of a timely notice of intent allows an interested person to file the competing preliminary permit application no later than 30 days after the specified comment date for the particular application. A competing preliminary permit application must conform with 18 CFR 4.30(b) and 4.36.

m. Competing Development Application—Any qualified development applicant desiring to file a competing development application must submit to the Commission, on or before a specified comment date for the particular application, either a competing development application or a notice of intent to file such an application. Submission of a timely notice of intent to file a development application allows an interested person to file the competing application no later than 120 days after the specified comment date for the particular application. A competing license application must conform with 18 CFR 4.30(b) and 4.36.

n. Notice of Intent—A notice of intent must specify the exact name, business address, and telephone number of the prospective applicant, and must include an unequivocal statement of intent to submit, if such an application may be filed, either a preliminary permit application or a development application (specify which type of application). A notice of intent must be served on the applicant(s) named in this public notice.

o. Proposed Scope of Studies under Permit—A preliminary permit, if issued, does not authorize construction. The term of the proposed preliminary permit would be 36 months. The work proposed under the preliminary permit would include economic analysis, preparation of preliminary engineering plans, and a study of environmental impacts. Based on the results of these studies, the Applicant would decide whether to proceed with the preparation of a development application to construct and operate the project.

p. Comments, Protests, or Motions to Intervene—Anyone may submit comments, a protest, or a motion to intervene in accordance with the requirements of Rules of Practice and Procedure, 18 CFR 385.210, .211, .214. In determining the appropriate action to take, the Commission will consider all protests or other comments filed, but only those who file a motion to intervene in accordance with the Commission's Rules may become a party to the proceeding. Any comments, protests, or motions to intervene must be received on or before the specified comment date for the particular application.

q. Filing and Service of Responsive Documents—Any filings must bear in all capital letters the title ''COMMENTS'', ''NOTICE OF INTENT TO FILE COMPETING APPLICATION'', ''COMPETING APPLICATION'', ''PROTEST'', or ''MOTION TO INTERVENE'', as applicable, and the Project Number of the particular application to which the filing refers. Any of the above-named documents must be filed by providing the original and the number of copies provided by the Commission's regulations to: The Secretary, Federal Energy Regulatory Commission, 888 First Street, NE, Washington, DC 20426. An additional copy must be sent to Director, Division of Hydropower Administration and Compliance, Federal Energy Regulatory Commission, at the above-mentioned address. A copy of any notice of intent, competing application or motion to intervene must also be served upon each

representative of the Applicant specified in the particular application.

r. Agency Comments—Federal, state, and local agencies are invited to file comments on the described application. A copy of the application may be obtained by agencies directly from the Applicant. If an agency does not file comments within the time specified for filing comments, it will be presumed to have no comments. One copy of an agency's comments must also be sent to the Applicant's representatives.

Linwood A. Watson, Jr.,

Deputy Secretary.

[FR Doc. 02–24877 Filed 10–1–02; 8:45 am]

BILLING CODE 6717–01–P

DEPARTMENT OF ENERGY

Federal Energy Regulatory Commission

Notice of Application Accepted for Filing and Soliciting Comments, Protests, and Motions To Intervene

September 25, 2002.

Take notice that the following hydroelectric application has been filed with the Commission and is available for public inspection:

a. *Type of Application:* Preliminary Permit.

b. *Project No.:* 12309–000.

c. *Date filed:* July 15, 2002.

d. *Applicant:* Ohio River L&D 52 Hydro, LLC.

e. *Name and Location of Project:* The Ohio River L&D No. 52 Hydroelectric Project would be located on the Ohio River in McCracken County, Kentucky. The proposed project would utilize an existing dam administered by the U.S. Army Corps of Engineers (Corps).

f. *Filed Pursuant to:* Federal Power Act, 16 U.S.C. 791(a)–825(r).

g. *Applicant contact:* Mr. Brent L. Smith, Northwest Power Services, Inc., P.O. Box 535, Rigby, ID 83442, Telephone (208) 745–0834.

h. *FERC Contact:* Tom Papsidero, (202) 502–6002.

i. *Deadline for filing comments, protests, and motions to intervene:* 60 days from the issuance date of this notice.

All documents (original and eight copies) should be filed with Magalie R. Salas, Secretary, Federal Energy Regulatory Commission, 888 First Street, NE., Washington, DC 20426. Comments, protests, and interventions may be filed electronically via the Internet in lieu of paper; *see* 18 CFR 385.2001(a)(1)(iii) and the instructions on the Commission's Web site under the ''e-Filing'' link. The Commission strongly encourages electronic filings. Please include the project number (P–12309–000) on any comments or motions filed.

The Commission's Rules of Practice and Procedure require all interveners filing documents with the Commission to serve a copy of that document on each person in the official service list for the project. Further, if an intervener files comments or documents with the Commission relating to the merits of an issue that may affect the responsibilities of a particular resource agency, they must also serve a copy of the document on that resource agency.

j. *Description of Project:* The proposed project, using the Corps' existing Ohio River Lock and Dam No. 52, would consist of: (1) Two proposed 50-foot-long, 16-foot-diameter penstocks, (2) a proposed powerhouse containing two generating units with a combined installed capacity of 20 megawatts, (3) a proposed 1-mile-long, 50-kv transmission line, and (4) appurtenant facilities. The project would operate in a run-of-river mode and would have an average annual generation of 160 GWh.

k. This filing is available for review at the Commission in the Public Reference Room or may be viewed on the Commission's Web site at *http://www.ferc.gov* using the ''FERRIS'' link. Enter the docket number excluding the last three digits in the docket number field to access the document. For assistance, call (202) 502–8222 or for TTY, (202) 502–8659. A copy is also available for inspection and reproduction at Ohio River L&D 52 Hydro, LLC, 975 South State Highway, Logan, UT 84321, (435) 752–2580.

l. Competing Preliminary Permit—Anyone desiring to file a competing application for preliminary permit for a proposed project must submit the competing application itself, or a notice of intent to file such an application, to the Commission on or before the specified comment date for the particular application (*see* 18 CFR 4.36). Submission of a timely notice of intent allows an interested person to file the competing preliminary permit application no later than 30 days after the specified comment date for the particular application. A competing preliminary permit application must conform with 18 CFR 4.30(b) and 4.36.

m. Competing Development Application—Any qualified development applicant desiring to file a competing development application must submit to the Commission, on or before a specified comment date for the particular application, either a competing development application or a notice of intent to file such an application. Submission of a timely notice of intent to file a development application allows an interested person to file the competing application no later than 120 days after the specified comment date for the particular application. A competing license application must conform with 18 CFR 4.30(b) and 4.36.

n. Notice of Intent—A notice of intent must specify the exact name, business address, and telephone number of the prospective applicant, and must include an unequivocal statement of intent to submit, if such an application may be filed, either a preliminary permit application or a development application (specify which type of application). A notice of intent must be served on the applicant(s) named in this public notice.

o. Proposed Scope of Studies under Permit—A preliminary permit, if issued, does not authorize construction. The term of the proposed preliminary permit would be 36 months. The work proposed under the preliminary permit would include economic analysis, preparation of preliminary engineering plans, and a study of environmental impacts. Based on the results of these studies, the Applicant would decide whether to proceed with the preparation of a development application to construct and operate the project.

p. Comments, Protests, or Motions to Intervene—Anyone may submit comments, a protest, or a motion to intervene in accordance with the requirements of Rules of Practice and Procedure, 18 CFR 385.210, .211, .214. In determining the appropriate action to take, the Commission will consider all protests or other comments filed, but only those who file a motion to intervene in accordance with the Commission's Rules may become a party to the proceeding. Any comments, protests, or motions to intervene must be received on or before the specified comment date for the particular application.

q. Filing and Service of Responsive Documents—Any filings must bear in all capital letters the title ''COMMENTS'', ''NOTICE OF INTENT TO FILE COMPETING APPLICATION'', ''COMPETING APPLICATION'', ''PROTEST'', or ''MOTION TO INTERVENE'', as applicable, and the Project Number of the particular application to which the filing refers. Any of the above-named documents must be filed by providing the original and the number of copies provided by the Commission's regulations to: The Secretary, Federal Energy Regulatory Commission, 888 First Street, NE., Washington, DC 20426. An additional

copy must be sent to Director, Division of Hydropower Administration and Compliance, Federal Energy Regulatory Commission, at the above-mentioned address. A copy of any notice of intent, competing application or motion to intervene must also be served upon each representative of the Applicant specified in the particular application.

r. Agency Comments—Federal, state, and local agencies are invited to file comments on the described application. A copy of the application may be obtained by agencies directly from the Applicant. If an agency does not file comments within the time specified for filing comments, it will be presumed to have no comments. One copy of an agency's comments must also be sent to the Applicant's representatives.

Linwood A. Watson, Jr.,

Deputy Secretary.

[FR Doc. 02–24878 Filed 10–1–02; 8:45 am]

BILLING CODE 6717–01–P

DEPARTMENT OF ENERGY

Federal Energy Regulatory Commission

Notice of Application Accepted for Filing and Soliciting Comments, Protests, and Motions To Intervene

September 25, 2002.

Take notice that the following hydroelectric application has been filed with the Commission and is available for public inspection:

a. *Type of Application:* Preliminary Permit.

b. *Project No.:* 12324–000.

c. *Date filed:* August 2, 2002.

d. *Applicant:* Universal Electric Power Corporation.

e. *Name and Location of Project:* The Aberdeen L&D Hydroelectric Project would be located on the Tombigbee River in Monroe County, Mississippi. The proposed project would utilize an existing dam administered by the U.S. Army Corps of Engineers (Corps).

f. *Filed Pursuant to:* Federal Power Act, 16 U.S.C. 791(a)–825(r).

g. *Applicant contact:* Mr. Raymond Helter, Universal Electric Power Corporation, 1145 Highbrook Street, Akron, OH 44301, Telephone (330) 535–7115.

h. *FERC Contact:* Tom Papsidero, (202) 502–6002.

i. *Deadline for filing comments, protests, and motions to intervene:* 60 days from the issuance date of this notice.

All documents (original and eight copies) should be filed with Magalie R. Salas, Secretary, Federal Energy Regulatory Commission, 888 First Street, NE., Washington, DC 20426. Comments, protests, and interventions may be filed electronically via the Internet in lieu of paper; *see* 18 CFR 385.2001(a)(1)(iii) and the instructions on the Commission's Web site under the ''e-Filing'' link. The Commission strongly encourages electronic filings. Please include the project number (P–12324–000) on any comments or motions filed.

The Commission's Rules of Practice and Procedure require all interveners filing documents with the Commission to serve a copy of that document on each person in the official service list for the project. Further, if an intervener files comments or documents with the Commission relating to the merits of an issue that may affect the responsibilities of a particular resource agency, they must also serve a copy of the document on that resource agency.

j. *Description of Project:* The proposed project, using the Corps' existing Aberdeen Lock and Dam and Reservoir, would consist of: (1) Two proposed 80-foot-long, 6-foot-diameter steel penstocks, (2) a proposed powerhouse containing two generating units with a combined installed capacity of 2.7 megawatts, (3) a proposed 700-foot-long, 14.7-kv transmission line, and (4) appurtenant facilities. The project would operate in a run-of-river mode and would have an average annual generation of 17 GWh. k. This filing is available for review at the Commission in the Public Reference Room or may be viewed on the Commission's Web site at *http://www.ferc.gov* using the ''FERRIS'' link. Enter the docket number excluding the last three digits in the docket number field to access the document. For assistance, call (202) 502–8222 or for TTY, (202) 502–8659. A copy is also available for inspection and reproduction at the address in item g. above.

l. Competing Preliminary Permit—Anyone desiring to file a competing application for preliminary permit for a proposed project must submit the competing application itself, or a notice of intent to file such an application, to the Commission on or before the specified comment date for the particular application (*see* 18 CFR 4.36). Submission of a timely notice of intent allows an interested person to file the competing preliminary permit application no later than 30 days after the specified comment date for the particular application. A competing preliminary permit application must conform with 18 CFR 4.30(b) and 4.36.

m. Competing Development Application—Any qualified development applicant desiring to file a competing development application must submit to the Commission, on or before a specified comment date for the particular application, either a competing development application or a notice of intent to file such an application. Submission of a timely notice of intent to file a development application allows an interested person to file the competing application no later than 120 days after the specified comment date for the particular application. A competing license application must conform with 18 CFR 4.30(b) and 4.36.

n. *Notice of Intent*—A notice of intent must specify the exact name, business address, and telephone number of the prospective applicant, and must include an unequivocal statement of intent to submit, if such an application may be filed, either a preliminary permit application or a development application (specify which type of application). A notice of intent must be served on the applicant(s) named in this public notice.

o. Proposed Scope of Studies under Permit—A preliminary permit, if issued, does not authorize construction. The term of the proposed preliminary permit would be 36 months. The work proposed under the preliminary permit would include economic analysis, preparation of preliminary engineering plans, and a study of environmental impacts. Based on the results of these studies, the Applicant would decide whether to proceed with the preparation of a development application to construct and operate the project.

p. Comments, Protests, or Motions to Intervene—Anyone may submit comments, a protest, or a motion to intervene in accordance with the requirements of Rules of Practice and Procedure, 18 CFR 385.210, .211, .214. In determining the appropriate action to take, the Commission will consider all protests or other comments filed, but only those who file a motion to intervene in accordance with the Commission's Rules may become a party to the proceeding. Any comments, protests, or motions to intervene must be received on or before the specified comment date for the particular application.

q. Filing and Service of Responsive Documents—Any filings must bear in all capital letters the title ''COMMENTS'', ''NOTICE OF INTENT TO FILE COMPETING APPLICATION'', ''COMPETING APPLICATION'', ''PROTEST'', or ''MOTION TO INTERVENE'', as applicable, and the Project Number of the particular application to which the filing refers.

Any of the above-named documents must be filed by providing the original and the number of copies provided by the Commission's regulations to: The Secretary, Federal Energy Regulatory Commission, 888 First Street, NE, Washington, DC 20426. An additional copy must be sent to Director, Division of Hydropower Administration and Compliance, Federal Energy Regulatory Commission, at the above-mentioned address. A copy of any notice of intent, competing application or motion to intervene must also be served upon each representative of the Applicant specified in the particular application.

r. Agency Comments—Federal, state, and local agencies are invited to file comments on the described application. A copy of the application may be obtained by agencies directly from the Applicant. If an agency does not file comments within the time specified for filing comments, it will be presumed to have no comments. One copy of an agency's comments must also be sent to the Applicant's representatives.

Linwood A. Watson, Jr.,

Deputy Secretary.

[FR Doc. 02–24879 Filed 10–1–02; 8:45 am]

BILLING CODE 6717–01–P

DEPARTMENT OF ENERGY

Federal Energy Regulatory Commission

Notice of Request To Use Alternative Procedures in Preparing a License Application

September 25, 2002.

Take notice that the following request to use alternative procedures to prepare a license application has been filed with the Commission.

a. *Type of Application:* Request to use alternative procedures to prepare a new license application.

b. *Project No.:* 620.

c. *Date filed:* July 6, 2002.

d. *Applicant:* NorQuest Seafoods, Inc.

e. *Name of Project:* Chignik Project.

f. *Location:* On Indian Creek, a tributary of Chignik Bay, in Chignik, Alaska. The project occupies 38.89 acres of United States lands under the supervision of the U.S. Bureau of Land Management.

g. *Filed Pursuant to:* Federal Power Act, 16 U.S.C. 791(a)—825(r).

h. *Applicant Contact:* Daniel Hertrich, Polarconsult Alaska, Inc., 1503 W. 33rd Avenue, #310, Anchorage, AK 99503, (907) 258–2420.

i. *FERC Contact:* John Mudre at (202) 502–8902; e-mail *john.mudre@ferc.gov*.

j. *Deadline for Comments:* 30 days from the date of this notice.

All documents (original and eight copies) should be filed with Magalie R. Salas, Secretary, Federal Energy Regulatory Commission, 888 First Street, NE, Washington, DC 20426.

Comments may be filed electronically via the Internet in lieu of paper. The Commission strongly encourages electronic filings. *See* 18 CFR 385.2001(a)(1)(iii) and the instructions on the Commission's Web site (*http://www.ferc.gov*) under the ''e-Filing'' link. k. The existing project consists of a 16.5-foot-high timber dam at the outlet of Upper Lake, creating a reservoir of approximately 8 acres at the maximum reservoir elevation of 431 feet (local datum), a channel spillway, a 7,700-foot-long, 8-inch-diameter wood-stave and steel pipeline, a 60-kW generating unit inside the applicant's fish cannery, the generator leads, and appurtenant facilities. No new facilities are proposed. l. A copy of the request to use alternative procedures is available for review at the Commission in the Public Reference Room or may be viewed on the Commission's Web site at *http://www.ferc.gov* using the ''FERRIS'' link. Enter the docket number excluding the last three digits in the docket number field to access the document. For assistance, call (202) 502–8222 or for TTY, (202) 502–8659. A copy is also available for inspection and reproduction at the address in item h above. m. NorQuest Seafoods, Inc. has demonstrated that it has made an effort to contact all federal and state resources agencies, non-governmental organizations (NGO), and others affected by the project. NorQuest Seafoods, Inc. has also demonstrated that a consensus exists that the use of alternative procedures is appropriate in this case. NorQuest Seafoods, Inc. has submitted a communications protocol that is supported by the stakeholders.

The purpose of this notice is to invite any additional comments on NorQuest Seafoods, Inc.'s request to use the alternative procedures, pursuant to Section 4.34(i) of the Commission's regulations. Additional notices seeking comments on the specific project proposal, interventions and protests, and recommended terms and conditions will be issued at a later date. NorQuest Seafoods, Inc. will complete and file a preliminary Environmental Assessment, in lieu of Exhibit E of the license application. This differs from the traditional process, in which an applicant consults with agencies, Indian tribes, NGOs, and other parties during preparation of the license application and before filing the application, but the Commission staff performs the environmental review after the application is filed. The alternative procedures are intended to simplify and expedite the licensing process by combining the pre-filing consultation and environmental review processes into a single process, to facilitate greater participation, and to improve communication and cooperation among the participants.

NorQuest Seafoods, Inc. has contacted federal and state resources agencies, NGOs, elected officials, flood control and downstream interests, environmental groups, business and economic development organizations, the boating industry, and members of the public regarding the Chignik Project. NorQuest Seafoods, Inc. intends to file 6-month progress reports during the alternative procedures process that leads to the filing of a license application by October 4, 2003.

Linwood A. Watson, Jr.,

Deputy Secretary.

[FR Doc. 02–24881 Filed 10–1–02; 8:45 am]

BILLING CODE 6717–01–P

DEPARTMENT OF ENERGY

Federal Energy Regulatory Commission

Notice of Application Ready for Environmental Analysis and Soliciting Comments, Recommendations, Terms and Conditions, and Prescriptions

September 26, 2002.

Take notice that the following hydroelectric application has been filed with the Commission and is available for public inspection. a. *Type of Application:* New Major License. b. *Project No.*: 2090–003. c. *Date filed*: August 31, 1999. d. *Applicant*: Green Mountain Power Corporation. e. *Name of Project*: Waterbury Project. f. *Location*: On Little River in Washington County, Vermont. No Federal Lands used in this project. g. *Filed Pursuant to*: Federal Power Act, 16 U.S.C. 791(a)-825(r). h. *Applicant Contact*: Mr. Craig T. Myotte, Green Mountain Power Corporation, 163 Action Lane, Colchester, VT 05446, (802) 660–5830. i. *FERC Contact*: Any questions on this notice should be addressed to Sergiu Serban, E-mail address,*sergiu.serban@ferc.gov*, or telephone 202–502–6211 j. *Deadline for filing motions to intervene and protests*: 60 days from the issuance date of this notice.

All documents (original and eight copies) should be filed with: Magalie R. Salas, Secretary, Federal Energy

Regulatory Commission, 888 First Street, NE., Washington, DC 20426.

The Commission's rules of practice and procedure require all intervenors filing documents with the Commission to serve a copy of that document on each person on the official service list for the project. Further, if an intervenor files comments or documents with the Commission relating to the merits of an issue that may affect the responsibilities of a particular resource agency, they must also serve a copy of the document on that resource agency.

Comments, recommendations, terms and conditions, and prescriptions may be filed electronically via the Internet in lieu of paper. The Commission strongly encourages electronic filings. See 18 CFR 385.2001(a)(1)(iii) and the instructions on the Commission's web site (*http://www.ferc.gov*) under the ''e-Filing'' link. k. This application has been accepted, and is ready for environmental analysis at this time. l. The existing project utilizing the U.S. Army Corps of Engineers Waterbury Dam and reservoir consists of: (1) A submerged concrete intake structure; (2) two 205-foot-long, 54-inch diameter steel penstocks which connect to a 79-inch-diameter penstock; (3) a powerhouse having one generating unit with an installed capacity of 5,520 kW; (4) a tailrace; (5) 50-foot-long, 33 kV transmission line; and (6) appurtenant facilities The applicant does not propose any modifications to the project features or operation The project would have an annual generation of 16,223 MWh and would be used to provide energy to its customers. m. A copy of the application is available for review at the Commission in the Public Reference Room or may be viewed on the Commission's website at *http://www.ferc.gov* using the ''FERRIS'' link. Enter the docket number excluding the last three digits in the docket number field to access the document. For assistance, call (202) 502–8222 or for TTY, (202) 502–8659. A copy is also available for inspection and reproduction at the address in item h above. n. The Commission directs, pursuant to Section 4.34(b) of the Regulations (*see* Order No. 533 issued May 8, 1991, 56 FR 23108, May 20, 1991) that all comments, recommendations, terms and conditions and prescriptions concerning the application be filed with the Commission within 60 days from the issuance date of this notice. All reply comments must be filed with the Commission within 105 days from the date of this notice.

Anyone may obtain an extension of time for these deadlines from the Commission only upon a showing of good cause or extraordinary circumstances in accordance with 18 CFR 385.2008.

All filings must (1) bear in all capital letters the title ''COMMENTS'', ''REPLY COMMENTS'', ''RECOMMENDATIONS,'' ''TERMS AND CONDITIONS,'' or ''PRESCRIPTIONS;'' (2) set forth in the heading the name of the applicant and the project number of the application to which the filing responds; (3) furnish the name, address, and telephone number of the person submitting the filing; and (4) otherwise comply with the requirements of 18 CFR 385.2001 through 385.2005. All comments, recommendations, terms and conditions or prescriptions must set forth their evidentiary basis and otherwise comply with the requirements of 18 CFR 4.34(b). Agencies may obtain copies of the application directly from the applicant. Each filing must be accompanied by proof of service on all persons listed on the service list prepared by the Commission in this proceeding, in accordance with 18 CFR 4.34(b), and 385.2010. o. *Procedural schedule and final amendments*: The application will be processed according to the following Hydro Licensing Schedule. Revisions to the schedule will be made as appropriate.

Notice of application is ready for environmental analysis—September 2002

Notice of the availability of the draft EA—March 2003

Notice of the availability of the final EA—June 2003

Ready for Commission's decision on the application—June 2003

Final amendments to the application must be filed with the Commission no later than 30 days from the issuance date of this notice.

Linwood A. Watson, Jr.,

Deputy Secretary.

[FR Doc. 02–25018 Filed 10–1–02; 8:45 am]

BILLING CODE 6717–01–P

DEPARTMENT OF ENERGY

Federal Energy Regulatory Commission

[Docket No. RM01–12–000]

Standard Market Design; Continuing Efforts To Standardize Inputs and Outputs for Electric Market Software

September 24, 2002.

AGENCY: Federal Energy Regulatory Commission, DOE.

ACTION: Notice of conference and agenda.

SUMMARY: As announced in the Commission's August 22, 2002, Notice of Follow-up Staff Conference on data and software standards (67 FR 55230, August 28, 2002) the Commission is convening a technical conference on October 3, 2002 at 9:00 a.m. to discuss continued efforts to standardize inputs and outputs for electric market software in connection with the implementation of the Commission's Standard Market Design (SMD) Rule. By this notice, the Commission is providing an agenda for the conference.

DATES: The Conference will be convened on October 3, 2002.

ADDRESSES: Federal Energy Regulatory Commission, 888 First Street, NE., Room—2C, Washington, DC 20426.

FOR FURTHER INFORMATION CONTACT: René Forsberg , Office of Markets, Tariff and Rates, Federal Energy Regulatory Commission, 888 First Street, NE., Washington, DC 20426, (202) 502–8425. E-mail: *Rene.forsberg@ferc.gov*.

SUPPLEMENTARY INFORMATION:

Notice of Conference and Agenda

As announced in the Notice of Conference issued August 22, 2002, the staff of the Federal Energy Regulatory Commission (Commission) will hold a follow-up conference to the July 18, 2002 Conference on Data and Software Standards. This conference is scheduled forOctober 3, 2002 to continue our efforts to standardize inputs and outputs for electric market software in connection with the implementation of the Commission's Standard Market Design (SMD) rule. The conference will start at 9 a.m. the Federal Energy Regulatory Commission, 888 First Street, NE., in Washington DC, in the Commission Meeting Room .

Consistent with the Commission's efforts to assure the efficient operation of wholesale energy markets under the control of independent transmission and market operators, the second conference on software for SMD will explore the question of how to maximize the value and minimize the developmental and user costs of grid and market software and data transfers. This conference will seek to answer, through collaborative discussion, the questions of the appropriate process to develop more standardized and compatible software and data, what entities play a role in developing market and business rules and standards, and how should these matters be organized within the wholesale electric industry stakeholders for timely and cost

effective success. The day's Agenda is attached.

Also attached is a chart that depicts our current view of the standards development process under the Commission's SMD. The RTO seams issues are to be developed by the Commission. Scheduling and other market and communication standards are to be developed by NAESB. The state estimator and other operational data standards are to be developed by NAESB, EPRI or by another approach. The chart also raises the question of whether there will be seams issues if the market and operational standards are developed by the same body.

New participants are invited to review recent activities on standard market design at *http://www.ferc.gov/Electric/RTO/Mrkt-Strct-comments/smd.htm*. For the Notice of Proposed Rulemaking on Remedying Undue Discrimination Through Open Access Transmission Service and Standard Electricity Market Design (particularly paragraphs 351–360), click on *Standard Market Design and Structure NOPR;* for the transcript of the July 18, 2002, Technical Conference on Data and Software Standards, click on: *SMD Structure and Conferences.*

The conference will be transcribed. Those interested in acquiring the transcript should contact Ace Reporters at 202–347–3700 or 800–336–6646. Transcripts will be placed in the public record ten days after the Commission receives the transcripts. Additionally, Capitol Connection offers the opportunity for remote listening and viewing of the conference. It is available for a fee, live or over the Internet, via C-Band Satellite. Persons interested in receiving the broadcast, or who need information on making arrangements should contact David Reininger or Julia Morelli at Capitol Connection (703–993–3100) as soon as possible or visit the Capitol Connection Web site at *http://www.capitolconnection.gmu.edu* and click on ''FERC.''

All interested parties are invited to attend. There is no registration fee. For additional information, please contact René Forsberg at 202–502–8425 (new phone number) or *Rene.Forsberg@ferc.gov*.

Linwood A. Watson, Jr.,

Deputy Secretary.

Attachments:

Chart: Standards Developments Under SMD

Conference Agenda

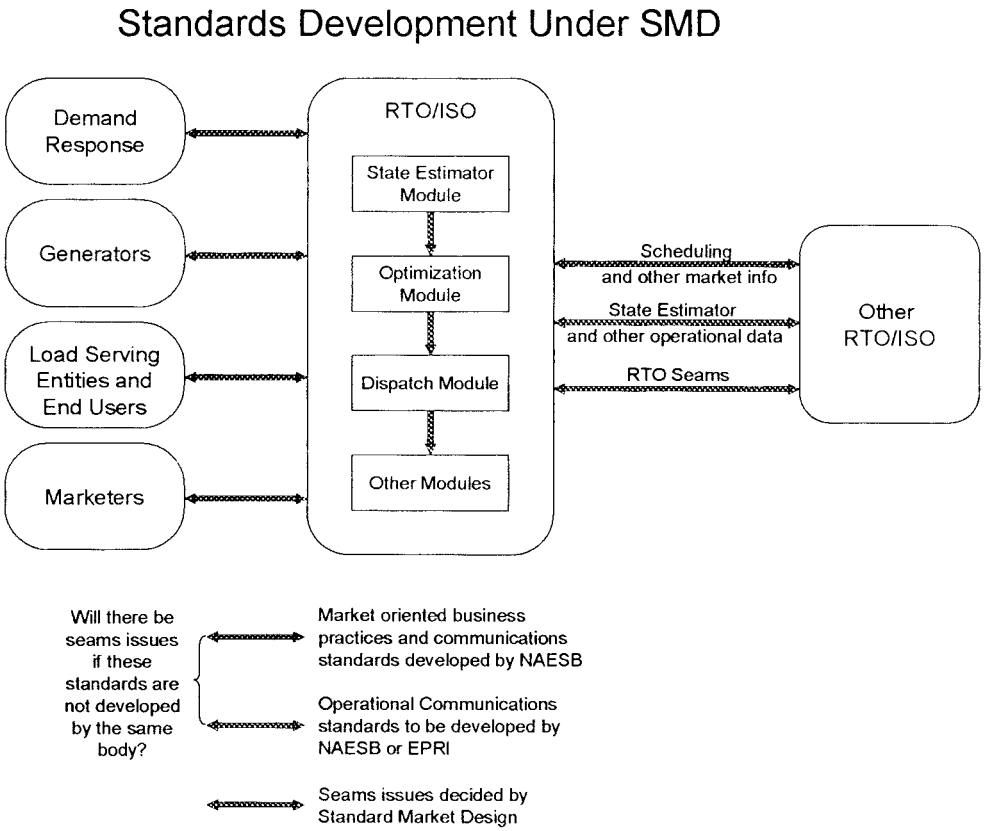

Conference Agenda—October 3, 2002

• Opening Remarks: 9 a.m.–9:05 a.m.

• Who Has a Role in Standard-Setting? 9:05 a.m.–10:30 a.m.

John Canavan Chairman, Electronic Scheduling Collaborative

Jim Buccigross Chairman, Executive Committee, NAESB/GISB

Robert Cummings NERC

Peter Hirsch Vice President Power Delivery Markets, EPRI

Gordon van Welie President/CEO, New England—ISO

Data and Software Standard-Setting Process: 10:30 a.m–11:45 a.m.

Brian Hewson Manager—Energy Licensing, Market Readiness Project Manager, ONTARIO ENERGY BOARD/IMO

Lockheed Martin To Be Announced

Data Interchange-Standards Association To Be Announced

Jim Buccigross Chairman, Executive Committee, NAESB/GISB

• Lunch: 11:45 a.m.–1 p.m.

• Developing the Plan for Wholesale Electric Market and Grid Software Consistency: 1 p.m.–3:30 p.m.

Gordon van Welie President/CEO, New England ISO

Jay Britton Senior Systems Architect, ALSTOM/ESCA
Gary Michor President/CEO, The SPI Group
Petar Ristanovic Executive Consultant, Siemens.
Andy Ott Gen. Mgr. of Mkt. Coordination, PJM–ISO.

[FR Doc. 02–24844 Filed 10–1–02; 8:45 am]

BILLING CODE 6717–01–P

ENVIRONMENTAL PROTECTION AGENCY

[FRL–7389–4]

Agency Information Collection Activities: Submission for OMB Review; Comment Request; National Emission Standards for Hazardous Air Pollutants for Source Categories: Generic Maximum Achievable Control Technology

AGENCY: Environmental Protection Agency (EPA).

ACTION: Notice.

SUMMARY: In compliance with the Paperwork Reduction Act (44 U.S.C. 3501 *et seq.*), this document announces that the following Information Collection Request (ICR) has been forwarded to the Office of Management and Budget (OMB) for review and approval: Title: National Emission Standards for Hazardous Air Pollutants for Source Categories: Generic Maximum Achievable Control Technology Standards (40 CFR part 63, subpart YY); OMB Control Number 2060–0420; expiration date September 30, 2002. The ICR describes the nature of the information collection and its expected burden and cost; where appropriate, it includes the actual data collection instrument.

DATES: Comments must be submitted on or before November 1, 2002.

ADDRESSES: Send comments, referencing EPA ICR Number 1871.03 and OMB Control Number 2060–0420, to the following addresses: Susan Auby, United States Environmental Protection Agency, Collection Strategies Division (Mail Code 2822T), 1200 Pennsylvania Avenue, NW., Washington, DC 20460–0001; and to the Office of Information and Regulatory Affairs, Office of Management and Budget (OMB), Attention: Desk Officer for EPA, 725 17th Street, NW., Washington, DC 20503.

FOR FURTHER INFORMATION CONTACT: For a copy of the ICR, contact Susan Auby at EPA by phone at (202) 566–1672, by e-mail at *auby.susan@epa.gov* or download off the Internet at *http://www.epa.gov/icr* and refer to EPA ICR Number 1871.03. For technical questions about the ICR, contact María Malavé in the Office of Compliance at (202) 564–7027 or via E-mail to *malave.maria@epa.gov*.

SUPPLEMENTARY INFORMATION:

Title: National Emission Standards for Hazardous Air Pollutants for Source Categories: Generic Maximum Achievable Control Technology (40 CFR Part 63, Subpart YY); OMB Control Number 2060–0420; EPA ICR Number 1871.03; expiration date September 30, 2002. This is a request for an extension of a currently approved collection.

Abstract: The National Emission Standards for Hazardous Air Pollutants (NESHAP) for Source Categories: Generic Maximum Achievable Control Technology (hereafter, this subpart is referred to as the ''generic MACT''), published at 40 CFR part 63, subpart YY, were proposed on October 14, 1998 (63 FR 55178), and promulgated on June 29, 1999 (64 FR 34854). The rule addressed hazardous air pollutant (HAP) emission sources in four categories: Polycarbonates (PC) Production, Acrylic and Modacrylic Fibers (AMF) Production, Acetal Resins (AR) Production and Hydrogen Fluoride (HF) Production. On November 22, 1999, the Agency proposed wastewater provisions amendments (64 FR 63779) to the promulgated generic MACT applicable to the AR, AMF, and PC production source categories. The HF production source category does not have wastewater streams. This Information Collection Request (ICR) addresses these four source categories. On December 6, 2000, at 63 FR 76408, the Agency added four additional source categories to the Generic MACT rule including: cyanide chemicals manufacturing, carbon black production, ethylene production, and spandex production, which are being addressed by ICR Number 1983.02, OMB Number 2060–0489.

Respondents are required to submit one-time reports of the (1) start of construction for new facilities or an initial notification if it is an existing source at the time of rule promulgation, (2) anticipated and actual start-up dates for new facilities, and (3) physical or operational changes to existing facilities. Owners and operators must also submit periodic reports (semiannual or according to the schedule for Title V) and leak detection and repair (LDAR) semiannual reports which could be submitted with the periodic reports. The specific monitoring and recordkeeping requirements will vary for each of the four source categories depending on the required control equipment and monitoring equipment. All records are to be maintained by the facility for a minimum of five years.

An agency may not conduct or sponsor, and a person is not required to respond to, a collection of information unless it displays a currently valid OMB control number. The OMB control numbers for EPA's regulations are listed in 40 CFR part 9 and 48 CFR chapter 15. The **Federal Register** document required under 5 CFR 1320.8(d), soliciting comments on this collection of information was published on October 29, 2002. No comments were received.

Burden Statement: The annual public reporting and recordkeeping burden for this collection of information is estimated to average 138 hours per response. Burden means the total time, effort, or financial resources expended by persons to generate, maintain, retain, or disclose or provide information to or for a Federal agency. This includes the time needed to review instructions; develop, acquire, install, and utilize technology and systems for the purposes of collecting, validating, and verifying information, processing and maintaining information, and disclosing and providing information; adjust the existing ways to comply with any previously applicable instructions and requirements; train personnel to be able to respond to a collection of information; search data sources; complete and review the collection of information; and transmit or otherwise disclose the information.

Respondents/Affected Entities: Any owner or operator of acetal resins production, acrylic and modacrylic fiber production, hydrogen fluoride production, and polycarbonates production.

Estimated Number of Respondents: 10.

Frequency of Response: Semiannual and on occasion.

Estimated Total Annual Hour Burden: 4,077.

Estimated Total Annualized Capital, O&M Cost Burden: $107, 289.

Send comments on the Agency's need for this information, the accuracy of the provided burden estimates, and any suggested methods for minimizing respondent burden, including through the use of automated collection techniques to the addresses listed above. Please refer to EPA ICR Number 1871.03 and OMB Control Number 2060–0420 in any correspondence.

Dated: September 25, 2002.

Oscar Morales,

Director, Collection Strategies Division.

[FR Doc. 02–25042 Filed 10–1–02; 8:45 am]

BILLING CODE 6560–50–P

ENVIRONMENTAL PROTECTION AGENCY

[FRL–7389–5]

Agency Information Collection Activities: Submission for OMB Review; Comment Request, NSPS Bulk Gasoline Terminals

AGENCY: Environmental Protection Agency (EPA).

ACTION: Notice.

SUMMARY: In compliance with the Paperwork Reduction Act (44 U.S.C. 3501 *et seq.*), this document announces that the following Information Collection Request (ICR) has been forwarded to the Office of Management and Budget (OMB) for review and approval: Title: OMB Control Number 2060–0006, expiration date 09/30/2002. The ICR describes the nature of the information collection and its expected burden and cost; where appropriate, it includes the actual data collection instrument.

DATES: Comments must be submitted on or before November 1, 2002.

ADDRESSES: Send comments, referencing EPA ICR No. 0664.07 and OMB Control No. 2060–0006, to the following addresses: Susan Auby, U.S. Environmental Protection Agency, Collection Strategies Division (Mail Code 2822T), 1200 Pennsylvania Avenue, NW., Washington, DC 20460–0001; and to Office of Information and Regulatory Affairs, Office of Management and Budget (OMB), Attention: Desk Officer for EPA, 725 17th Street, NW., Washington, DC 20503.

FOR FURTHER INFORMATION CONTACT: For a copy of the ICR contact Susan Auby at EPA by phone at (202) 566–1672, by e-mail at *auby.susan@epa.gov* or download off the Internet at *http://www.epa.gov/icr* and refer to EPA ICR No. 0664.07. For technical questions about the ICR contact Julie Tankersley at (202) 564–7002 or by e-mail at *tankersley.julie@epa.gov.*

SUPPLEMENTARY INFORMATION:

Title: NSPS Subpart XX for Bulk Gasoline terminals, OMB Control Number 2060–0006, EPA ICR Number 0664.07, expiration date 09/30/2002. This is a request for extension of a currently approved collection.

Abstract: The Agency has judged that volatile organic chemical emissions from bulk gasoline terminals cause or contribute to air pollution that may reasonably be anticipated to endanger public health or welfare. Owners or operators of bulk gasoline terminals must make the following one-time-only reports: notification of the date of construction or reconstruction; notification of the anticipated and actual dates of startup; notification of any physical or operational change to an existing facility which may increase the regulated pollutant emission rate; notification of the date of the initial performance test, and the results of the initial performance test. Owners or operators are also required to maintain records of the occurrence and duration of any startup, shutdown, or malfunction in the operation of an affected facility. Monitoring requirements specific to bulk gasoline terminals consist mainly of identifying and documenting vapor tightness for each gasoline tank truck that is loaded at the affected facility, and notifying the owner or operator of each tank truck that is not vapor tight. The owner or operator must also perform a monthly visual inspection for liquid or vapor leaks. An agency may not conduct or sponsor, and a person is not required to respond to, a collection of information unless it displays a currently valid OMB control number. The OMB control numbers for EPA's regulations are listed in 40 CFR part 9 and 48 CFR chapter 15.

An agency may not conduct or sponsor, and a person is not required to respond to, a collection of information unless it displays a currently valid OMB control number. The OMB control numbers for EPA's regulations are listed in 40 CFR part 9 and 48 CFR chapter 15. The **Federal Register** document required under 5 CFR 1320.8(d), soliciting comments on this collection of information was published on October 29, 2001 (66 FR 54514); no comments were received.

Burden Statement: The annual public reporting and recordkeeping burden for this collection of information is estimated to average 286 hours per response. Burden means the total time, effort, or financial resources expended by persons to generate, maintain, retain, or disclose or provide information to or for a Federal agency. This includes the time needed to review instructions; develop, acquire, install, and utilize technology and systems for the purposes of collecting, validating, and verifying information, processing and maintaining information, and disclosing and providing information; adjust the existing ways to comply with any previously applicable instructions and requirements; train personnel to be able to respond to a collection of information; search data sources; complete and review the collection of information; and transmit or otherwise disclose the information.

Respondents/Affected Entities: Owners and operators of bulk gasoline terminals.

Estimated Number of Respondents: 40.

Frequency of Response: One time only.

Estimated Total Annual Hour Burden: 11,420.

Estimated Total Annualized Capital, O&M Cost Burden: 0.

Send comments on the Agency's need for this information, the accuracy of the provided burden estimates, and any suggested methods for minimizing respondent burden, including through the use of automated collection techniques to the addresses listed above. Please refer to EPA ICR No. 0664.07 and OMB Control No. 2060–0006 in any correspondence.

Dated: September 28, 2002.

Oscar Morales,

Director, Collection Strategies Division.

[FR Doc. 02–25043 Filed 10–1–02; 8:45 am]

BILLING CODE 6560–50–P

ENVIRONMENTAL PROTECTION AGENCY

[FRL–7389–3]

Agency Information Collection Activities: Submission for OMB Review; Comment Request; Used Oil Management Standards Recordkeeping and Reporting Requirements

AGENCY: Environmental Protection Agency (EPA).

ACTION: Notice.

SUMMARY: In compliance with the Paperwork Reduction Act (44 U.S.C. 3501 *et seq.*), this document announces that the following Information Collection Request (ICR) has been forwarded to the Office of Management and Budget (OMB) for review and approval: Used Oil Management Standards Recordkeeping and Reporting Requirements, OMB Control Number 2050–0124, EPA ICR Number 1286.06, expiring September 30, 2002. The ICR describes the nature of the information collection and its expected burden and cost; where appropriate, it includes the actual data collection instrument.

DATES: Comments must be submitted on or before November 1, 2002.

ADDRESSES: Send comments, referencing EPA ICR No. 1286.06 and OMB Control No. 2050–0124, to the following addresses: Susan Auby, U.S. Environmental Protection Agency, Collection Strategies Division (Mail Code 2822T), 1200 Pennsylvania Avenue, NW., Washington, DC 20460–0001; and to Office of Information and Regulatory Affairs, Office of Management and Budget (OMB), Attention: Desk Officer for EPA, 725 17th Street, NW., Washington, DC 20503.

FOR FURTHER INFORMATION CONTACT: For a copy of the ICR contact Susan Auby at EPA by phone at (202) 566–1672, by e-mail at *auby.susan@epa.gov,* or download off the Internet at *http://www.epa.gov/icr* and refer to EPA ICR No. 1286.06. For technical questions about the ICR contact Mike Svizzero by phone at (703) 308–0046, or by e-mail at *svizzero.michael@epa.gov.*

SUPPLEMENTARY INFORMATION:

Title: Used Oil Management Standards Recordkeeping and Reporting Requirements, OMB Control No. 2050–0124, EPA ICR No. 1286.06, expiring September 30, 2002. This is a request for an extension of a currently approved collection.

Abstract: The Used Oil Management Standards, which include information collection requests, were developed in accordance with section 3014 of the Resource Conservation and Recovery Act (RCRA), as amended by the Hazardous and Solid Waste Amendments of 1984 (HSWA), which directs EPA to ''promulgate regulations * * * as may be necessary to protect public health and the environment from the hazards associated with recycled oil'' and, at the same time, to not discourage used oil recycling. In 1985 and 1992, EPA established mandatory regulations that govern the management of used oil (*see* 40 CFR part 279). To document and ensure proper handling of used oil, these regulations establish notification, testing, tracking and recordkeeping requirements for used oil transporters, processors, re-refiners, marketers, and burners. They also set standards for the prevention and cleanup of releases to the environment during storage and transit, and for the safe closure of storage units and processing and re-refining facilities to mitigate future releases and damages. EPA believes these requirements minimize potential hazards to human health and the environment from the potential mismanagement of used oil by used oil handlers, while providing for the safe recycling of used oil. Information from these information collection requirements is used to ensure compliance with the Used Oil Management Standards. An agency may not conduct or sponsor, and a person is not required to respond to, a collection of information unless it displays a currently valid OMB control number. The OMB control numbers for EPA's regulations are listed in 40 CFR part 9 and 48 CFR chapter 15. The **Federal Register** notice required under 5 CFR 1320.8(d), soliciting comments on this collection of information was published on April 12, 2002 (67 FR 17991); one comment was received.

Burden Statement: The annual public reporting and recordkeeping burden for this collection of information is estimated to range from 6 minutes to 23 hours per response. Burden means the total time, effort, or financial resources expended by persons to generate, maintain, retain, or disclose or provide information to or for a Federal agency. This includes the time needed to review instructions; develop, acquire, install, and utilize technology and systems for the purposes of collecting, validating, and verifying information, processing and maintaining information, and disclosing and providing information; adjust the existing ways to comply with any previously applicable instructions and requirements; train personnel to be able to respond to a collection of information; search data sources; complete and review the collection of information; and transmit or otherwise disclose the information.

Respondent/Affected Entities: Business or other for profit.

Estimated Number of Respondents: 1,640.

Frequency of Response: Biannually.

Estimated Total Annual Hour Burden: 460,286 hours.

Estimated Total Annualized Capital, O&M Cost Burden: $10,011,000.

Send comments on the Agency's need for this information, the accuracy of the provided burden estimates, and any suggested methods for minimizing respondent burden, including through the use of automated collection techniques to the addresses listed above. Please refer to EPA ICR No. 1286.06 and OMB Control No. 2050–0124 in any correspondence.

Dated: September 24, 2002.

Oscar Morales,

Director, Collection Strategies Division.

[FR Doc. 02–25047 Filed 10–1–02; 8:45 am]

BILLING CODE 6560–50–P

FEDERAL COMMUNICATIONS COMMISSION

[CC Docket No. 96–45; DA 02–2220]

Revised Forms 486 and 479 and Accompanying Instructions for Schools and Libraries Universal Service Support Mechanism

AGENCY: Federal Communications Commission.

ACTION: Notice.

SUMMARY: In this document the Wireline Competition Bureau announces the release of revised FCC Forms 486 and 479 and the associated instructions for the schools and libraries universal service support mechanism. These revised forms adopt changes in the certifications that libraries must make to indicate compliance with the Children's Internet Protection Act.

DATES: September 11, 2002.

FOR FURTHER INFORMATION CONTACT: Narda Jones, Attorney, Telecommunications Access Policy Division, Wireline Competition Bureau, (202) 418–7400, TTY: (202) 418–0484.

SUPPLEMENTARY INFORMATION: The Wireline Competition Bureau of the Federal Communications Commission announces the release of revised FCC Forms 486 and 479 and the associated instructions for the schools and libraries universal service support mechanism. These revised forms adopt changes in the certifications that libraries must make to indicate compliance with the Children's Internet Protection Act (CIPA) (Public Law 106–554). The changes are adopted in response to the recent decision of the United States District Court for the Eastern District of Pennsylvania, which held that the CIPA requirements incorporated at 47 U.S.C. 254(h)(6) were facially unconstitutional as to libraries. *See American Library Ass'n, Inc.* v. *U.S.,* 201 F. Supp. 2d 401 (E.D. Pa. 2002).

SLD will continue to accept the previous versions of the FCC Forms 486 and 479. Those libraries that choose to submit FCC Forms 486 or 479 using the previous versions and that are required to certify to compliance with those CIPA certifications established by 47 U.S.C. 254(l) should check Item 11a, certifying compliance with CIPA ''as codified at 47 U.S.C. 254(h) and (l).'' Libraries checking Item 11a are certifying that they have complied to the extent that these sections apply, as of the date of the start of discounted services for the relevant funding year. Pursuant to the decision of the United States District Court for the Eastern District of Pennsylvania, section 254(h)(6) no

longer applies to libraries, and libraries may truthfully check Item 11a to certify compliance only with section 254(l). Library applicants checking this box are certifying that they have an Internet safety policy as described above, and have satisfied the public notice and hearing/meeting requirement, but are not certifying as to a technology protection measure because they are not required to filter Internet access. The same is true for the other CIPA certifications on FCC Forms 486 and 479. Additional guidance on the use of the old forms can be obtained on SLD's Web site at *http://www.sl.universalservice.org/reference/CIPAGuidance.asp*.

Although SLD will continue to accept the previous versions of the FCC Forms 486 and 479, all applicants are strongly encouraged to make use of the new forms. Unlike the prior versions, the new forms can be scanned by SLD. Use of the new forms will expedite processing and receipt of discounts. The new forms and instructions may be obtained at the SLD Web site, *http://www.sl.universalservice.org*, or by contacting the SLD Client Service Bureau at (888) 203–8100.

Federal Communications Commission.

Mark G. Seifert,

Deputy Division Chief, Telecommunications Access Policy Division.

[FR Doc. 02–25072 Filed 10–1–02; 8:45 am]

BILLING CODE 6712–01–M

FEDERAL COMMUNICATIONS COMMISSION

[WC Docket No. 02–157; FCC 02–262]

Application by Verizon New England Inc., Verizon Delaware Inc., Bell Atlantic Communications, Inc. (d/b/a Verizon Long Distance), NYNEX Long Distance Company (d/b/a Verizon Enterprise Solutions), Verizon Global Networks Inc., and Verizon Select Services Inc., for Authorization To Provide In-Region, InterLATA Services in New Hampshire and Delaware

AGENCY: Federal Communications Commission.

ACTION: Notice.

SUMMARY: In the document, the Federal Communications Commission (Commission) grants the section 271 application of Verizon New England, Inc. Verizon Delaware Inc., Bell Atlantic Communications, Inc. (d/b/a Verizon Long Distance), NYNEX Long Distance Company (d/b/a Verizon Enterprise Solutions), Verizon Global Networks Inc., and Verizon Select Services Inc. (Verizon), for authority to enter the interLATA telecommunications market in the states of New Hampshire and Delaware. The Commission grants Verizon's application based on its conclusion that Verizon has satisfied all of the statutory requirements for entry and opened its local exchange markets to full competition.

DATES: Effective October 4, 2002.

FOR FURTHER INFORMATION CONTACT: Henry Thaggert, Attorney-Advisor, Wireline Competition Bureau, at (202) 418–7941 or via the Internet at *hthagger@fcc.gov.* The complete text of this Memorandum Opinion and Order is available for inspection and copying during normal business hours in the FCC Reference Information Center, Portals II, 445 12th Street, SW., Room CY–A257, Washington, DC 20554. Further information may also be obtained by calling the Wireline Competition Bureau's TTY number: (202) 418–0484.

SUPPLEMENTARY INFORMATION: This is a summary of the Commission's Memorandum Opinion and Order in WC Docket No. 02–157, FCC 02–262, adopted September 25, 2002, and released September 25, 2002. The full text of this order may be purchased from the Commission's duplicating contractor, Qualex International, Portals II, 445 12th Street, SW., Room CY–B402, Washington, DC 20554, telephone 202–863–2893, facsimile 202–863–2898, or via e-mail *qualexint@aol.com.* It is also available on the Commission's Web site at *http://www.fcc.gov/Bureaus/Wireline_Competition/in-region_applications.*

Synopsis of the Order

1. *History of the Application.* On June 27, 2002, Verizon filed an application pursuant to section 271 of the Telecommunications Act of 1996, with the Commission to provide in-region, interLATA service in the states of New Hampshire and Delaware.

2. *The State Commissions' Evaluations.* The New Hampshire Public Utilities Commission (New Hampshire Commission) and the Delaware Public Services Commission (Delaware Commission), following an extensive review process, advised the Commission that Verizon has taken the statutorily required steps to open its local markets in each state to competition. Consequently, the state commissions recommended that the Commission approve Verizon's in-region, interLATA entry in their evaluations and comments in this proceeding.

3. *The Department of Justice's Evaluation.* The Department of Justice filed its evaluation on August 1, 2002, concluding that Verizon has generally succeeded in opening its local markets in New Hampshire and Delaware to competition. Accordingly, the Department of Justice recommends approval of Verizon's application for section 271 authority in New Hampshire and Delaware.

Primary Issues in Dispute

4. *Compliance with Section 271(c)(1)(A).* The Commission concludes that Verizon demonstrates that it satisfies the requirements of section 271 (c)(1)(A) based on the interconnection agreements it has implemented with competing carriers in New Hampshire and Delaware. The record demonstrates that competitive LECs serve business and residential customers using predominantly their own facilities in each of the states.

5. *Checklist Item 2—Unbundled Network Elements.* Based on the record, the Commission finds that Verizon has provided ''nondiscriminatory access to network elements in accordance with the requirements of sections 251(c)(3) and 252(d)(1)'' of the Act in compliance with checklist item 2.

6. The Commission further finds that, while substantial questions were raised regarding whether New Hampshire UNE rates were adopted through a proceeding that correctly applied TELRIC principles in all instances, Verizon's current New Hampshire UNE rates pass a benchmark comparison to New York UNE rates. Therefore, New Hampshire UNE rates satisfy checklist item 2. The Commission performs its benchmark analysis by aggregating non loop rate elements.

7. In Delaware, Verizon reduced its switching rates during the pendency of this proceeding in response to claims that the data underlying cost inputs to the rates had become outdated. Verizon's reduced switching rates caused Verizon's non loop rates to satisfy a benchmark comparison to New York non loop rates. Delaware loop rates also satisfied a benchmark comparison to New York rates. Thus, Verizon's Delaware UNE rates also satisfy checklist item 2.

8. *OSS.* The Commission also concludes that Verizon provides nondiscriminatory access to its OSS—the systems, databases, and personnel necessary to support network elements or services. Verizon provides access to its OSS in a manner that enables competing carriers to perform the functions in substantially the same time and manner as Verizon does or, if no

appropriate retail analogue exists within Verizon's systems, in a manner that permits competitors a meaningful opportunity to compete. In addition, regarding specific areas where the Commission identifies relatively minor issues with Verizon's OSS performance in New Hampshire—order processing notifiers, flow-through, and billing accuracy—these problems are not sufficient to warrant a finding of checklist noncompliance.

9. *Checklist Item 4—Unbundled Local Loops.* Verizon demonstrates that it provides unbundled local loops in accordance with the requirements of section 271 and our rules, in that it provides ''local loop transmission from the central office to the customer's premises, unbundled from local switching or other services.'' More specifically, Verizon establishes that it provides access to loop make-up information in compliance with the *UNE Remand Order* and nondiscriminatory access to stand alone xDSL-capable loops and high-capacity loops. Also, Verizon provides voice grade loops, both as new loops and through hot-cut conversions, in a nondiscriminatory manner. Finally, Verizon has demonstrated that it has a line-sharing and line-splitting provisioning process that affords competitors nondiscriminatory access to these facilities.

Other Checklist Items

10. *Checklist Item 1*—Interconnection. Based on the evidence in the record, the Commission concludes that Verizon provides access and interconnection on terms and conditions that are just, reasonable and nondiscriminatory, in accordance with the requirements of section 251(c)(2) and as specified in section 271, and applied in the Commission's prior orders. Pursuant to this checklist item, Verizon must allow other carriers to interconnect their networks to its network for the mutual exchange of traffic, using any available method of interconnection at any available point in Verizon's network. Verizon's performance generally satisfies the applicable benchmark or retail comparison standards for this checklist item.

11. *Checklist Item 11*—Local Number Portability. Section 251(b)(2) requires all LECs ''to provide, to the extent technically feasible, number portability in accordance with requirements prescribed by the Commission.'' Based on the evidence in the record, the Commission finds that Verizon complies with the requirements of checklist item 11. As noted elsewhere in the order, Verizon uses the same processes and procedures relating to unbundled loops in Delaware as it does in Pennsylvania. Therefore, because there is insufficient data in Delaware, we look to Verizon's performance in Pennsylvania as a basis for our evaluation, and it has met the benchmark standard for this measurement in Pennsylvania in each relevant month.

12. *Checklist Items 3, 5, 6, 7, 8, 9, 10, 12, 13 and 14.* An applicant under section 271 must demonstrate that it complies with checklist item 3 (access to poles, ducts, and conduits), item 5 (unbundled local transport), item 6 (unbundled local switching), item 7 (911/E911 access and directory assistance/operator services), item 8 (white pages directory listings), item 9 (numbering administration), item 10 (databases and associated signaling), item 12 (local dialing parity), item 13 (reciprocal compensation), and item 14 (resale). Based on the evidence in the record, the Commission concludes that Verizon demonstrates that it is in compliance with checklist items 3, 5, 6, 7, 8, 9, 10, 12, 13 and 14 in New Hampshire and Delaware.

13. *Section 272 Compliance.* Based on the record, Verizon provides evidence that it maintains the same structural separation and nondiscrimination safeguards in Delaware and New Hampshire as it does in Pennsylvania, New York, Connecticut, and Massachusetts—states in which Verizon has already received section 271 authority. Therefore, the Commission concludes that Verizon has demonstrated that it is in compliance with the requirements of section 272.

14. *Public Interest Analysis.* The Commission concludes that approval of this application is consistent with the public interest. From its extensive review of the competitive checklist, which embodies the critical elements of market entry under the Act, we find that barriers to competitive entry in the local exchange markets have been removed and the local exchange markets in New Hampshire and Delaware are open to competition. The Commission further finds that, as noted in prior section 271 orders, BOC entry into the long distance market will benefit consumers and competition if the relevant local exchange market is open to competition consistent with the competitive checklist. Verizon demonstrates that there is significant local competition in Delaware and New Hampshire, that Verizon's local market will remain open to competition, and that section 271 approval would enhance local and long distance competition in Delaware and New Hampshire.

15. *Section 271(d)(6) Enforcement Authority.* Working with each of the state commissions, the Commission intends to closely monitor Verizon's post-approval compliance to ensure that Verizon continues to meet the conditions required for section 271 approval. It stands ready to exercise its various statutory enforcement powers quickly and decisively in appropriate circumstances to ensure that the local market remains open in each of the states.

Federal Communications Commission.

Marlene H. Dortch,

Secretary.

[FR Doc. 02–25062 Filed 10–1–02; 8:45 am]

BILLING CODE 6712–01–P

FEDERAL ELECTION COMMISSION

Sunshine Act Notice

DATE AND TIME: Tuesday, October 8, 2002, at 10 a.m.

PLACE: 999 E Street, NW., Washington, DC (Ninth Floor).

STATUS: This meeting will be open to the public.

ITEMS TO BE DISCUSSED.

Correction and Approval of Minutes.

Draft Advisory Opinion 2002–07: Careau & Co. and Mohre Communications by Robert F. Carrot, President.

Draft Advisory Opinion 2002–11: Mortgage Bankers Association of America (MBAA) and MBAA PAC by counsel, Jan Witold Baran and Carol A. Laham.

Routine Administrative Matters.

DATE AND TIME: Tuesday, October 8, 2002, to follow the open meeting.

PLACE: 999 E Street, NW., Washington, DC.

STATUS: This meeting will be closed to the public.

ITEMS TO BE DISCUSSED:

Compliance matters pursuant to 2 U.S.C. 437g.

Audits conducted pursuant to 2 U.S.C. 437g, 438(b), and Title 26, U.S.C.

Matters concerning participation in civil actions or proceedings or arbitration.

Internal personnel rules and procedures or matters affecting a particular employee.

DATE AND TIME: Thursday, October 10, 2002, at 10 a.m.

PLACE: 999 E Street, NW., Washington, DC (Ninth Floor).

STATUS: This meeting will be open to the public.

ITEMS TO BE DISCUSSED:

Correction and Approval of Minutes.

Notice of Proposed Rulemaking on Consolidated Reporting.

Explanation and Justification for Electioneering Communications Final Rules.

Explanation and Justification for Interim Final Rules on FCC Electioneerinig Communications Database.

FOR MORE INFORMATION CONTACT: Mr. Ron Harris, Press Officer, Telephone: (202) 694–1220.

Mary W. Dove,

Secretary of the Commission.

[FR Doc. 02–25206 Filed 9–30–02; 2:58 pm]

BILLING CODE 6715–01–M

FEDERAL MARITIME COMMISSION

Notice of Agreement(s) Filed

The Commission hereby gives notice of the filing of the following agreement(s) under the Shipping Act of 1984. Interested parties can review or obtain copies of agreements at the Washington, DC offices of the Commission, 800 North Capitol Street, NW., Room 940. Interested parties may submit comments on an agreement to the Secretary, Federal Maritime Commission, Washington, DC 20573, within 10 days of the date this notice appears in the **Federal Register**.

Agreement No.: 002550–007.

Title: New Orleans-Maersk Lease Agreement.

Parties: Board of Commissioners of the Port of New Orleans Maersk, Inc.

Synopsis: The amendment permits arrangements for special rates for certain cargo handled at the applicable terminal.

Agreement No.: 010977.

Title: Hispaniola Discussion Agreement.

Parties: A.P. Moller-Maersk Sealand
Crowley Liner Services, Inc.
Tecmarine Lines, Inc.
Seaboard Marine, Ltd.
Tropical Shipping and Construction Co., Ltd.
Frontier Liner Services, Inc.
Bernuth Agencies, Inc.

Synopsis: The proposed amendment deletes NPR, Inc. and Sea Star Line, LLC as parties to the Hispaniola Discussion Agreement.

* * * * *

Agreement No.: 011737–008.

Title: The MCA Agreement.

Parties:
Atlantic Container Line AB
Alianca Navegacao e Logistica Ltda
Antillean Marine Shipping Corporation
CMA CGM, S.A.
Companhia Libra De Navegacao
Compania Sud Americana De Vapores S.A.
CP Ships (UK) Limited, d/b/a ANZDL and d/b/a Contship Containerlines
Crowley Liner Services, Inc.
Dole Ocean Cargo Express, Inc.
Hamburg-Sud
Hapag-Lloyd Container Linie
King Ocean Central America S.A.
King Ocean Service De Colombia S.A.
King Ocean Service De Venezuela S.A.
Lykes Lines Limited, LLC
Montemar Maritima S.A.
Nippon Yusen Kaisha
Norasia Container Line Limited
P&O Nedlloyd Limited
Safmarine Container Lines N.V.
Tecmarine Lines, Inc.
TMM Lines Limited, LLC
Tropical Shipping & Construction Co., Ltd.
Wallenius Wilhelmsen Lines AS.

Synopsis: The proposed amendment adds P&O Nedlloyd Limited as a member and deletes all references to committees in the agreement.

Agreement No.: 011820.

Title: WWL/WLS Space Charter Agreement.

Parties:
Wallenius Wilhelmsen Lines AS
World Logistics Service (U.S.A.), Inc.

Synopsis: The proposed agreement would allow World Logistics to charter space for roll-on/roll-off cargo from Wallenius Wilhelmsen on its vessels operating from Veracruz, Mexico, to U.S. Atlantic and Gulf Coast ports. The parties request expedited review.

Agreement No.: 201006–004.

Title: New Orleans-P&O Ports LA Lease Agreement.

Parties:
Board of Commissioners of the Port of New Orleans
P&O Ports Louisiana, Inc.

Synopsis: The amendment amends the term of the agreement to permit the tenant to relocate to another of the port's facilities. It also adds provisions for special rate adjustments and minimum annual guarantee adjustments. The agreement now runs through October 31, 2003.

By order of the Federal Maritime Commission.

Dated: September 23, 2002.

Bryant L. VanBrakle,

Secretary.

[FR Doc. 02–25057 Filed 10–1–02; 8:45 am]

BILLING CODE 6730–01–P

FEDERAL MARITIME COMMISSION

Ocean Transportation Intermediary License

Reissuances

Notice is hereby given that the following Ocean Transportation Intermediary licenses have been reissued by the Federal Maritime Commission pursuant to section 19 of the Shipping Act of 1984, as amended by the Ocean Shipping Reform Act of 1998 (46 U.S.C. app. 1718) and the regulations of the Commission pertaining to the licensing of Ocean Transportation Intermediaries, 46 CFR 515.

License No.	Name/address	Date reissued
1857N	Air/Sea Forwarding Specialists, Inc., 3812 Springhill Avenue, Mobile, AL 36608	June 19, 2002.
16779F	EAFF (USA), Inc., 8840 NW 102nd Street, Medley, FL 33178	August 1, 2002.
17200F	Global Forwarding Corp., 10420 NW 37th Terrace, Miami, FL 33178	May 12, 2002.
15655N	Millennium Plus, Inc., 10910 S. La Cienega Blvd., Inglewood, CA 90304	August 9, 2002.
17135N	Next Day Cargo, Inc., 8805 32nd Lane, Miami, FL 33122	July 25, 2002.
13709N	PAC West Trading & Transport, Inc. dba Pacwest Transport, 2531 West 237th Street, Suite 122, Torrance, CA 90505.	August 9, 2002.
17505N	Trans Logistics, Inc. dba World Express, 520 E. Carson Plaza Ct., Suite 205, Carson, CA 90746.	August 1, 2002.

Sandra L. Kusumoto,

Director, Bureau of Consumer Complaints and Licensing.

[FR Doc. 02–25058 Filed 10–1–02; 8:45 am]

BILLING CODE 6730–01–P

FEDERAL MARITIME COMMISSION

Ocean Transportation Intermediary License Revocations

The Federal Maritime Commission hereby gives notice that the following Ocean Transportation Intermediary licenses have been revoked pursuant to section 19 of the Shipping Act of 1984 (46 U.S.C. app. 1718) and the regulations of the Commission pertaining to the licensing of Ocean Transportation Intermediaries, effective on the corresponding date shown below:

License Number: 12039N.
Name: Caribbean Cargo Agencies, Inc. dba Intermar.
Address: 2801 NW 74th Avenue, Suite 105, Miami, FL 33122.
Date Revoked: September 4, 2002.
Reason: Failed to maintain a valid bond.

License Number: 17204N.
Name: Cargo Unlimited, Inc.
Address: 14950 Heathrow Forest Pkwy, Suite 165, Houston, TX 77032.
Date Revoked: August 8, 2002.
Reason: Surrendered license voluntarily.

License Number: 4265NF.
Name: Computrex International Services, Inc. dba Computrex Logistics.
Address: 9960 Corporate Campus Drive, Suite 1100, Louisville, KY 40223.
Date Revoked: September 14, 2002.
Reason: Failed to maintain valid bonds.

License Number: 3661N.
Name: Expressair Cargo, Inc.
Address: 11091 NW 27th Street, Miami, FL 33172.
Date Revoked: September 8, 2002.
Reason: Failed to maintain a valid bond.

License Number: 9806F.
Name: International Link Service Inc.
Address: 160–23 Rockaway Blvd., Jamaica, NY 11434.
Date Revoked: August 14, 2002.
Reason: Failed to maintain a valid bond.

License Number: 17408N.
Name: Maraly International Corp.
Address: 7206 NW 84th Avenue, Miami, FL 33166.
Date Revoked: July 7, 2002.
Reason: Failed to maintain a valid bond.

License Number: 3120NF.
Name: Meridian Cargo, Inc.
Address: 1424 NW 82nd Avenue, Miami, FL 33126.
Date Revoked: August 21, 2002.
Reason: Failed to maintain valid bonds.

License Number: 3634NF.
Name: Ocean Cargo Line, Inc. dba Total Transport International.
Address: c/o 15 Exchange Place, Suite 1020, Jersey City, NJ 07302–3912.
Date Revoked: September 14, 2002.
Reason: Failed to maintain valid bonds.

License Number: 16194F.
Name: Palumbo International Freight Forwarders, Inc.
Address: Calle Nebraska S–8, Ext. Parkville, Guaynabo, PR 00969.
Date Revoked: July 18, 2002.
Reason: Failed to maintain a valid bond.

License Number: 16981N.
Name: PK Shipping, Inc.
Address: 5707 Calverton Street, Suite 2–E, Baltimore, MD 21228.
Date Revoked: September 9, 2002.
Reason: Failed to maintain a valid bond.

License Number: 15814N.
Name: Rally Express U.S.A., Inc.
Address: 1925 W. Temple Street, Suite 109, Los Angeles, CA 90026.
Date Revoked: August 21, 2002.
Reason: Failed to maintain a valid bond.

License Number: 4327NF.
Name: Sea Expo Freight Services, Inc.
Address: 32 Somerville Road, Hewitt, NJ 07421.
Date Revoked: August 25, 2002.
Reason: Failed to maintain valid bonds.

License Number: 4350NF.
Name: Seaborne International, Inc. dba Seaborne Express Line.
Address: 11222 La Cienega Blvd., Suite 470, Inglewood, CA 90304.
Date Revoked: September 14, 2002.
Reason: Failed to maintain valid bonds.

License Number: 17111NF.
Name: Spencer Shipping Corp.
Address: 2050 NW 95th Avenue, Miami, FL 33172.
Date Revoked: August 24, 2002.
Reason: Failed to maintain valid bonds.

License Number: 12629N.
Name: T & T Shipping Services, Inc.
Address: 2546 Pitkin Avenue, Brooklyn, NY 11208.
Date Revoked: August 14, 2002.
Reason: Failed to maintain a valid bond.

License Number: 16804N.
Name: Tae Logistics, Inc.
Address: 8820 S. Sepulveda Blvd., Unit 110, Los Angeles, CA 90045.
Date Revoked: September 7, 2002.
Reason: Failed to maintain a valid bond.

License Number: 16792N.
Name: Tap-Tap Shipping, Inc.
Address: 1034 Linwood Street, Brooklyn, NY 11208.
Date Revoked: August 18, 2002.
Reason: Failed to maintain a valid bond.

License Number: 3863NF.
Name: Tera Trading Group, Inc. dba T.T.G. International Freight Forwarders.
Address: 1850 NW 82nd Avenue, Miami, FL 33126.
Date Revoked: July 6, 2002 and August 1, 2002.
Reason: Failed to maintain valid bonds.

License Number: 15797N.
Name: United Cargo Handling A/S United Cargo Lines.
Address: 478 Pennsylvania Avenue, Suite 301, Glen Ellyn, IL 60137.
Date Revoked: August 23, 2002.
Reason: Failed to maintain a valid bond.

License Number: 11962N.
Name: Universal Freightways Corp.
Address: 7500 NW 54th Street, Miami, FL 33166.
Date Revoked: May 5, 2002.
Reason: Failed to maintain a valid bond.

Sandra L. Kusumoto,

Director, Bureau of Consumer Complaints and Licensing.

[FR Doc. 02–25059 filed 10–1–02; 8:45 am]

BILLING CODE 6730–01–P

FEDERAL MARITIME COMMISSION

Ocean Transportation Intermediary License; Applicants

Notice is hereby given that the following applicants have filed with the Federal Maritime Commission an application for license as a Non-Vessel Operating Common Carrier and Ocean Freight Forwarder—Ocean Transportation Intermediary pursuant to section 19 of the Shipping Act of 1984 as amended (46 U.S.C. app. 1718 and 46 CFR 515).

Persons knowing of any reason why the following applicants should not receive a license are requested to contact the Office of Transportation Intermediaries, Federal Maritime Commission, Washington, DC 20573.

Non-Vessel Operating Common Carrier Ocean Transportation Intermediary Applicants:

Penasa Logistics (USA), Inc., 11222 S. La Cienega Blvd., #180, Inglewood, CA 90304.

Officers: Yoon Hyoun Baek, Secretary/Director (Qualifying Individual) Kam Yuen Tam, CEO

ALSPAC Miami Corporation, 8408 N.W. 66th Street, Miami, FL 33166.
Officers: Maurice Rousseau, Jr., Vice President (Qualifying Individual) Mounr Whan Chang, President

Non-Vessel Operating Common Carrier and Ocean Freight Forwarder Transportation Intermediary Applicants:

K. Carlton International, Inc., 7744 Peters Road, #225, Plantation, FL 33324.
Officers: Kathleen R. Carlton, President (Qualifying Individual) Michael Mattsson, Vice President

General Logistics, Inc., 175–01 Rockaway Blvd., Suite 213, Jamaica, NY 11434.
Officer: Chae J. Kim, President (Qualifying Individual)

Ocean Freight Forwarder—Ocean Transportation Intermediary Applicants:

Limitless international Inc., 513 Whisper Walk, Chesapeake, VA 23322.
Officer: Cheryl A. Stockstad, President (Qualifying Individual)

TDC International Express Inc., 500 Carson Plaza Drive, #20, Carson, CA 90746.
Officer: Susan Cha, President (Qualifying Individual)

Susie Gonzalez, Inc. dba Friends Cargo International, 8367 NW 74th Street, Miami, FL 33166.
Officers: Susie Gonzalez, President (Qualifying Individual), Jorge Gonzalez, Vice President.

Dated: September 27, 2002.

Bryant L. VanBrakle,

Secretary.

[FR Doc. 02–25060 Filed 10–1–02; 8:45 am]

BILLING CODE 6730–01–P

FEDERAL RESERVE SYSTEM

Agency information collection activities: Proposed collection; comment request

AGENCY: Board of Governors of the Federal Reserve System

ACTION: Notice

SUMMARY: *Background.* On June 15, 1984, the Office of Management and Budget (OMB) delegated to the Board of Governors of the Federal Reserve System (Board) its approval authority under the Paperwork Reduction Act, as per 5 CFR 1320.16, to approve of and assign OMB control numbers to collection of information requests and requirements conducted or sponsored by the Board under conditions set forth in 5 CFR 1320 Appendix A.1. Board–approved collections of information are incorporated into the official OMB inventory of currently approved collections of information. Copies of the OMB 83–I's and supporting statements and approved collection of information instruments are placed into OMB's public docket files. The Federal Reserve may not conduct or sponsor, and the respondent is not required to respond to, an information collection that has been extended, revised, or implemented on or after October 1, 1995, unless it displays a currently valid OMB control number.

Request for Comment on Information Collection Proposal.

The following information collection, which is being handled under this delegated authority, has received initial Board approval and is hereby published for comment. At the end of the comment period, the proposed information collection, along with an analysis of comments and recommendations received, will be submitted to the Board for final approval under OMB delegated authority. Comments are invited on the following:

a. whether the proposed collection of information is necessary for the proper performance of the Federal Reserve's functions; including whether the information has practical utility;

b. the accuracy of the Federal Reserve's estimate of the burden of the proposed information collection, including the validity of the methodology and assumptions used;

c. ways to enhance the quality, utility, and clarity of the information to be collected; and

d. ways to minimize the burden of information collection on respondents, including through the use of automated collection techniques or other forms of information technology.

DATES: Comments must be submitted on or before December 2, 2002.

ADDRESSES: Comments may be mailed to Ms. Jennifer J. Johnson, Secretary, Board of Governors of the Federal Reserve System, 20th Street and Constitution Avenue, N.W., Washington, DC 20551. However, because paper mail in the Washington area and at the Board of Governors is subject to delay, please consider submitting your comments by e–mail to *regs.comments@federalreserve.gov*, or faxing them to the Office of the Secretary at 202–452–3819 or 202–452–3102. Comments addressed to Ms. Johnson may also be delivered to the Board's mail facility in the West Courtyard between 8:45 a.m. and 5:15 p.m., located on 21st Street between Constitution Avenue and C Street, NW. Members of the public may inspect comments in Room MP–500 between 9:00 a.m. and 5:00 p.m. on weekdays pursuant to 261.12, except as provided in 261.14, of the Board's Rules Regarding Availability of Information, 12 CFR 261.12 and 261.14.

A copy of the comments may also be submitted to the OMB desk officer for the Board: Joseph Lackey, Office of Information and Regulatory Affairs, Office of Management and Budget, New Executive Office Building, Room 3208, Washington, DC 20503.

FOR FURTHER INFORMATION CONTACT: A copy of the proposed form and instructions, the Paperwork Reduction Act Submission (OMB 83–I), supporting statement, and other documents that will be placed into OMB's public docket files once approved may be requested from the agency clearance officer, whose name appears below.

Mary M. West, Federal Reserve Board Clearance Officer (202–452–3829), Division of Research and Statistics, Board of Governors of the Federal Reserve System, Washington, DC 20551. Telecommunications Device for the Deaf (TDD) users may contact Diane Jenkins (202–452–3544), Board of Governors of the Federal Reserve System, Washington, DC 20551.

SUPPLEMENTARY INFORMATION:

Proposal to approve under OMB delegated authority the extension for three years, without revision, of the following report:

1. Report title: Recordkeeping and Disclosure Requirements Associated with Loans Secured by Real Estate Located in Flood Hazard Areas Pursuant to Section 208.25 of Regulation H.

Agency form number: Reg H–2

OMB control number: 7100–0280

Frequency: Event–generated

Reporters: State member banks

Annual reporting hours: 111,420 hours

Estimated average hours per response: Notice of special flood hazards to borrowers and servicers, 0.08 hours; notice to the Federal Emergency Management Agency (FEMA) of servicer, 0.08 hours; notice to FEMA of change of servicer, 0.08 hours; and retention of standard FEMA form, 0.04 hours.

Number of respondents: 976

Small businesses are affected.

General description of report: This information collection is mandatory (12 U.S.C. 248(a)(1)). Because the Federal Reserve does not collect any of FEMA forms this information collection is not

given confidential treatment. However, should any of these records come into the possession of the Federal Reserve, such information may be protected from disclosure by exemption 4 and 6 of the Freedom of Information Act (5 U.S.C. 552(b)(4) and (b)(6)).

Abstract: Regulation H requires state member banks to notify a borrower and servicer when loans secured by real estate are determined to be in a special flood hazard area and notify them whether flood insurance is available; notify FEMA of the identity of, and any change of, the servicer of a loan secured by real estate in a special flood hazard area; and retain a completed copy of the Standard Flood Hazard Determination Form used to determine whether property securing a loan is in a special flood hazard area.

Board of Governors of the Federal Reserve System, September 27, 2002.

Jennifer J. Johnson,

Secretary of the Board.

[FR Doc. 02–25036 Filed 10–1–02; 8:45 pm]

BILLING CODE 6210–01–S

FEDERAL RESERVE SYSTEM

Change in Bank Control Notices; Acquisition of Shares of Bank or Bank Holding Companies

The notificants listed below have applied under the Change in Bank Control Act (12 U.S.C. 1817(j)) and § 225.41 of the Board's Regulation Y (12 CFR 225.41) to acquire a bank or bank holding company. The factors that are considered in acting on the notices are set forth in paragraph 7 of the Act (12 U.S.C. 1817(j)(7)).

The notices are available for immediate inspection at the Federal Reserve Bank indicated. The notices also will be available for inspection at the office of the Board of Governors. Interested persons may express their views in writing to the Reserve Bank indicated for that notice or to the offices of the Board of Governors. Comments must be received not later than October 16, 2002.

A. Federal Reserve Bank of Atlanta (Sue Costello, Vice President) 1000 Peachtree Street, N.E., Atlanta, Georgia 30309–4470:

1. Joseph Bienvue Falgoust, Vacherie, Louisiana; Charles J. Falgoust, Vacherie, Louisiana; Dean T. Falgoust, River Ridge, Louisiana; Marian A. Falgoust, Metairie, Louisiana; Michael A. Falgoust, Vacherie, Louisiana; Ronald J. Falgoust, Thibodaux, Louisiana; Rose Mary Falgoust, Vacherie, Louisiana; Susan B. Falgoust, Vacherie, Louisiana; Falgoust Family Holdings, LLC, Vacherie, Louisiana; Blake J. Falgoust, Vacherie, Louisiana; Ronald A. Ordoyne, Vacherie, Louisiana; Joan Ordoyne, as custodian for Luke Falgoust; Vacherie, Louisiana; Joan Ordoyne, as custodian for Laura Falgoust, Vacherie, Louisiana; Francois P. Falgoust, Vacherie, Louisiana; Ulger Landry, Vacherie, Louisiana; and Denny Guillot, Raceland, Louisiana; to acquire additional voting shares of One American Corp., and thereby indirectly acquire additional voting shares of First American Bank and Trust, both of Vacherie, Louisiana.

Board of Governors of the Federal Reserve System, September 26, 2002.

Jennifer J. Johnson,

Secretary of the Board.

[FR Doc. 02–25040 Filed 10–1–02; 8:45 am]

BILLING CODE 6210–01–S

FEDERAL RESERVE SYSTEM

Consumer Advisory Council

ACTION: Notice of Meeting of Consumer Advisory Council

SUMMARY: The Consumer Advisory Council will meet on Thursday, October 24, 2002. The meeting, which will be open to public observation, will take place at the Federal Reserve Board's offices in Washington, DC, in Dining Room E on the Terrace level of the Martin Building. Anyone planning to attend the meeting should, for security purposes, register no later than Tuesday, October 22, by completing the form found on–line at: *http://www.federalreserve.gov/forms/cacregistration.cfm*. Additionally, attendees must present photo identification to enter the building.

The meeting will begin at 9:00 a.m. and is expected to conclude at 1:00 p.m. The Martin Building is located on C Street, NW, between 20th and 21st Streets.

The Council's function is to advise the Board on the exercise of the Board's responsibilities under various consumer financial services laws and on other matters on which the Board seeks its advice. Time permitting, the Council will discuss the following topics:

Real Estate Settlement Procedures Act: Discussion of aspects of the proposed revisions by the Department of Housing and Urban Development to the rules implementing the Real Estate Settlement Procedures Act.

Identify Theft: Discussion of deterrence options for identify theft.

Access to Credit Cards: Discussion of access to credit by consumers who may not have the ability to repay, particularly students.

Committee Reports: Council committees will report on their work.

Other matters initiated by Council members also may be discussed.

ADDRESSES: Persons wishing to submit views to the Council on any of the above topics may do so by sending written statements to Ann Bistay, Secretary of the Consumer Advisory Council, Division of Consumer and Community Affairs, Board of Governors of the Federal Reserve System, Washington, DC 20551. Information about this meeting may be obtained from Ms. Bistay, 202–452–6470.

Board of Governors of the Federal Reserve System, September 26, 2002.

Jennifer J. Johnson,

Secretary of the Board.

[FR Doc. 02–25038 Filed 10–1–02; 8:45 am]

BILLING CODE 6210–01–S

DEPARTMENT OF HEALTH AND HUMAN SERVICES

Health Resources and Services Administration

Ricky Ray Hemophilia Relief Fund Program Procedure for Augmenting Petitions and Reminder of Termination Date of Fund

AGENCY: Health Resources and Services Administration, HHS.

ACTION: Notice.

SUMMARY: The purpose of this notice is to announce the procedure for the augmentation of petitions filed with the Ricky Ray Hemophilia Relief Fund Program, postmarked by the November 13, 2001, statutory deadline, for which an initial payment decision has been made; and to remind the public of the November 12, 2003, termination date of the Ricky Ray Hemophilia Relief Fund.

DATES: The termination date of the Ricky Ray Trust Fund is November 12, 2003.

ADDRESSES: All documentation to augment eligible petitions must be submitted to the Ricky Ray Program, Bureau of Health Professions, Health Resources and Services Administration, Room 4–81, Parklawn Building, 5600 Fishers Lane, Rockville, Maryland 20857.

FOR FURTHER INFORMATION CONTACT: Paul T. Clark, Director, Ricky Ray Program, Bureau of Health Professions, Health Resources and Services Administration, (301) 443–2330.

SUPPLEMENTARY INFORMATION: The order of the review and payment decision of

any specific petition filed with the Ricky Ray Program was based on the postmark date of the petition. The facts related to the petition may have changed over time subsequent to the payment decision. This document addresses how the Ricky Ray Program will handle new information that becomes available before the Ricky Ray Trust Fund terminates on November 12, 2003, where the new information may change the payment decision of a petition that has been approved for a payment of less than $100,000, or a disapproved petition.

This document also reminds the public of the termination date of the Ricky Ray Hemophilia Relief Fund, November 12, 2003. This date is governed by section 101(d) of the Act, which states that the Fund shall terminate upon the expiration of the 5-year period beginning on the date of enactment of the Act on November 12, 1998. The unobligated funds remaining at the end of this period shall be deposited in the miscellaneous receipts account in the Treasury of the United States.

Background

The Ricky Ray Program implements the Ricky Ray Hemophilia Relief Fund Act of 1998 (the Act), Pub. Law 105–369. The Act provides for compassionate payments to individuals with blood-clotting disorders, such as hemophilia, who were treated with antihemophilic factor between July 1, 1982 and December 31, 1987, and contracted human immunodeficiency virus (HIV), as well as to certain persons who contracted HIV from these individuals. In the event individuals eligible for payment are deceased, the Act also provides for payments to certain survivors of these individuals.

Petition payment determinations under the Act are based upon the documents that were included in a petition as of the date the petition was reviewed. As a result, some petitions were approved for a payment of less than $100,000 or were disapproved because the documentation submitted with the petition did not support a payment of $100,000.

The Act stipulates that petitions are to be reviewed in the order received. To comply with this legislative mandate, the Ricky Ray Program developed and implemented its petition review process whereby petitions would be randomly numbered by the postmark date and reviewed in accordance with the randomly assigned number. The Program also decided to make payments as soon as possible after all July 31, 2000, postmarked petitions were in-house, rather than waiting until after the filing deadline date, November 13, 2001, to begin making payments. These decisions addressed a series of Program-related factors such as: the mortality of the target population, the initial amount of $75 million appropriated for the Program in fiscal year 2000, and the uncertainty of future appropriations.

The Act and its regulations recognize that petitions may be affected by circumstances beyond petitioners' control that could impact a payment decision. Section 130.24 (a) of the Ricky Ray Program's Final Rule with Amendments (66 FR 58667) states that where a petition raises an eligibility or payment question, ''the Secretary may require the petitioner to provide other documentation, as the Secretary deems appropriate, to resolve issues of eligibility, or of the procedure for payment, raised by a petition.'' This regulatory provision allows a petitioner to augment a petition with new documents or additional information from any source provided that the petition was postmarked on or before November 13, 2001. The Act and its regulations also provide for a two-year period between the final postmark date and the date when the Program's Trust Fund terminates. This authority permits the Secretary to review the most recent documentation available to resolve any eligibility or payment issue relating to an approval or disapproval decision on a petition.

The Ricky Ray Program, by statute, is authorized to pay $100,000 on behalf of an eligible individual with HIV. In the case of multiple survivors, *i.e.*, children or parents, the $100,000 payment must be divided in equal shares among that class of survivors. There are petitioner survivors whose petitions only included documentation that supported their portion of the payment of $100,000.

Criteria for Augmentation

The following criteria must be met in order for a petition to be eligible for augmentation.

1. Only a petition postmarked by November 13, 2001, and, therefore, included in the Ricky Ray Program system of records, may be augmented.

The Ricky Ray Program regulations stipulate that petitions submitted to the Program must be postmarked between July 31, 2000, and November 13, 2001. Petitions postmarked during this period of time were given a petition number and recorded in the Program's system of records.

2. Only a petitioner, a petitioner's personal representative, or a disinterested third party, such as a court, a hospital, or a state department of vital statistics, may augment a petition.

A petitioner, a petitioner's personal representative, or a disinterested third party may augment a petition with documentation that could affect the Program's petition payment decision. The documentation or information that augments the petition must be received by the Program in sufficient time before November 12, 2003, to allow for review and processing before the Fund terminates.

In implementing this procedure with regard to payment decisions for survivors of eligible individuals, the Ricky Ray Program will make payments in accordance with section 103(c)(2)(A) of the Act, which establishes a hierarchy of survivors, as follows:

1. Surviving spouse.

2. Child(ren) in equal shares if there is no surviving spouse.

3. Parent(s) in equal shares if there are no surviving spouse or surviving children.

Documentation Required for Augmentation

The documentation or information that the Program may consider when a petitioner, petitioner's personal representative, or the disinterested third party augments a petition includes, but is not limited to:

1. A court order determining that the other surviving parent's parental rights have been terminated.

2. A death certificate of the other eligible survivor(s).

3. Other evidence establishing eligibility for the full payment, such as: (a) An order from a court of competent jurisdiction documenting that the survivor is the sole survivor of the eligible individual; (b) documentation that supports the existence of a relationship between a survivor and an eligible individual, which may, in some circumstances, include Social Security, Department of Veterans Affairs or Department of Defense benefits to survivors; (c) documentation that the medical requirements necessary for eligibility have been met.

Any documentation submitted by a petitioner, a petitioner's personal representative, or a disinterested third party to augment a petition must be received by the Ricky Ray Program in sufficient time to allow for processing and payment prior to the Trust Fund's termination date of November 12, 2003. No payments will be made after that date.

Examples of how this augmentation procedure will be implemented are available on the Ricky Ray Program

website at: *http://www.hrsa.gov/bhpr/rickyray.*

Paperwork Reduction Act

The information collection requirements for the Ricky Ray Homphilia Relief Fund (42 CFR part 130) have been approved under OMB No. 0915–0244.

Dated: September 24, 2002.

Elizabeth M. Duke,

Administrator.

[FR Doc. 02–24953 Filed 10–1–02; 8:45 am]

BILLING CODE 4165–15–P

DEPARTMENT OF HEALTH AND HUMAN SERVICES

Office of the Secretary

Findings of Scientific Misconduct

AGENCY: Office of the Secretary, HHS.

ACTION: Notice.

SUMMARY: Notice is hereby given that the Office of Research Integrity (ORI) and the Assistant Secretary for Health have taken final action in the following case:

Heather J. Muenchen, Ph.D., University of Michigan: Based on the report of an investigation conducted by the University of Michigan (UM), Dr. Muenchen's admissions, and additional analysis conducted by ORI in its oversight review, the U.S. Public Health Service (PHS) found that Dr. Muenchen, former postdoctoral fellow at UM, engaged in scientific misconduct in research funded by National Institutes of Health (NIH) Urology Research Training Grant T32 DK07758 and SPORE grant PSO CA69568. Dr. Muenchen falsified and fabricated research data by computer manipulation of 12 Western blot analyses in three publications and two draft manuscripts.

Specifically, PHS found that Dr. Muenchen:

(1) Falsified Western blot data in Figures 3, 4A, and 4B in the following paper: Muenchen, H.J., Lin, D–L., Walsh, M.A., Keller, E.T., and Pienta, K.J. ''Tumor necrosis factor-alpha-induced apoptosis in prostate cancer cells through inhibition of nuclear factor-κB by an IκBα 'super-repressor.' '' Clinical Cancer Research 6(5):1969–1977, 2000;

(2) Falsified Western blot data in Figures 2 and 3 in the following paper: Muenchen, H.J., Poncza, P.J., and Pienta, K.J. ''Different docetaxel-induced apoptotic pathways are present in prostate cancer cell lines LNCaP and PC–3.'' Urology 57(2):366–370, 2001;

(3) Falsified Western blots and associated claims for Figures 1, 5A, 5B, and 8 in the following paper: Muenchen, H.J., Lin, D–L., Poncza, P.J., McLean, L.L, Dirette, M.L., Keller, E.T., and Pienta, K.J. ''Re-expression of functional androgen receptor in androgen-independent prostate cancer cells.'' Published electronically on November 13, 2000 in the Journal of Biological Chemistry (JBC) as Online Manuscript M008934200 (withdrawn January 16, 2001); and

(4) Falsified Western blot analyses in Figures 4A, 4B, and 7 of the original draft submitted for publication on September 29, 2000, (and the corresponding Figures 5A, 5B, and 8 in the second draft submitted October 20, 2000) of the JBC manuscript.

Dr. Muenchen was the first and corresponding author on the above publications, which were supported in part by Urology Research Training Grant T32 DK07758 and SPORE grant P50 CA69568. These falsifications are significant because they misrepresent the expression of the androgen receptor, the necessary control data, the evidence for ''super-repressor'' binding and its effect, and the control data for assaying apoptosis. These misrepresentations occurred through a series of separate and specific deceptions in an attempt to obviate the legitimate criticisms of publication reviewers. These falsifications were designed to be misleading about the experiments' true results and to wrongfully induce publication of the experiments. Dr. Muenchen's work could have provided tools for understanding metastasis in prostate cancer and ultimately impact on treatment of this disease.

Dr. Muenchen has entered into a Voluntary Exclusion Agreement in which she has voluntarily agreed:

(1) To exclude herself from any contracting or subcontracting with any agency of the United States Government and from eligibility for, or involvement in, nonprocurement transactions (*e.g.*, grants and cooperative agreements) of the United States Government as defined in 45 CFR part 76 (Debarment Regulations) for a period of five (5) years, beginning on September 5, 2002;

(2) To exclude herself from serving in any advisory capacity to PHS including but not limited to service on any PHS advisory committee, board, and/or peer review committee, or as a consultant for a period of five (5) years, beginning on September 5, 2002; and

(3) Within 30 days of the effective date of this Agreement, to submit letters of retraction to the editor of Urology retracting the paper published at 57(2):366–370, 2001, and to the editor of Clinical Cancer Research, published at 6(5):1969–1977, 2000, identifying and retracting the falsified or fabricated data in Figure 3 and Figures 4A and 4B. The retraction requirements will remain on the ALERT System until Dr. Muenchen sends, and ORI receives, copies of the retraction letters consistent with the above language.

FOR FURTHER INFORMATION CONTACT: Director, Division of Investigative Oversight, Office of Research Integrity, 5515 Security Lane, Suite 700, Rockville, MD 20852, (301) 443–5330.

Chris B. Pascal,

Director, Office of Research Integrity.

[FR Doc. 02–24952 Filed 10–1–02; 8:45 am]

BILLING CODE 4150–31–P

DEPARTMENT OF HEALTH AND HUMAN SERVICES

Centers for Disease Control and Prevention

[Program Announcement 02185]

Cooperative Agreement to the Association of Immunization Managers; Notice of Award of Funds

A. Purpose

The Centers for Disease Control and Prevention (CDC) announces the availability of fiscal year (FY) 2002 funds for a cooperative agreement program for the Association of Immunization Managers. This program addresses the ''Healthy People 2010'' focus area of Immunization and Infectious Diseases.

The purpose of the program is to (1) maintain an effective communication capacity among the nation's immunization program managers and CDC; (2) sustain a capacity to coordinate both rapid and comprehensive assessments of problems and opportunities faced by immunization managers; and (3) establish a capacity to coordinate the consultations and collaborations that will enable state and local health departments to assimilate and implement the latest programmatic, scientific and technological developments and concepts affecting the goal of immunizing our nation's citizens.

B. Eligible Applicants

Assistance will be provided only to the Association of Immunization Mangers (AIM). No other applications are solicited. AIM is the only organization that has an established relationship with state and local health department immunization programs, access to public health managers and

practitioners involved in the control of vaccine-preventable diseases, and the expertise necessary to carry out this project. AIM is a unique organization because its members have technical expertise in the areas of management, vaccine, information technology, quality assurance, health care delivery, health education and disease surveillance which is required to ensure effective implementation of population-based immunization programs.

Note: Title 2 of the United States Code section 1611 states that an organization described in section 501(c)(4) of the Internal Revenue Code that engages in lobbying activities is not eligible to receive Federal funds constituting an award, grant or loan.

C. Availability of Funds

$150,000 is being awarded in FY 2002. It is expected that the award will begin on or about September 30, 2002 and will be made for a 12-month budget period within a project period of up to five years. Funding estimates may change.

Continuation awards within an approved project period will be made on the basis of satisfactory progress as evidenced by required reports and the availability of funds.

D. Where To Obtain Additional Information

This and other CDC announcements, the necessary applications, and associated forms can be found on the CDC home page Internet address—*http://www.cdc.gov.* Click on ''Funding'' then ''Grants and Cooperative Agreements.''

For business management assistance, contact: Peaches Brown, Grants Management Specialist, Procurement and Grants Office, Centers for Disease Control and Prevention, 2920 Brandywine Road, Room 3000, Atlanta, GA 30341–4146, Telephone number: (770) 488–2738, Email address: *prb0@cdc.gov.*

For program technical assistance, contact: Kenneth Sharp, Program Operations Branch, ISD, National Immunization Program, Mailstop E–52, 1600 Clifton Rd, Atlanta, GA 30333, Telephone number: (404) 639–8215, Email address: *kls2@cdc.gov.*

Dated: September 24, 2002.

Sandra R. Manning,

Director, Procurement and Grants Office, Centers for Disease Control and Prevention.

[FR Doc. 02–24986 Filed 10–1–02; 8:45 am]

BILLING CODE 4163–18–P

DEPARTMENT OF HEALTH AND HUMAN SERVICES

Administration for Children and Families

Proposed Information Collection Activity; Comment Request

Proposed Projects

Title: Revised Form OCSE–100, State Plan for Child Support Under Title IV–D of the Social Security Act.

OMB No.: 0970–0017.

Description: The state plan preprint and amendments serve as a contract with OCSE in outlining the activities the state will perform as requried by law in order for states to receive federal funds. We are asking for approval to revise one state plan preprint page to reflect new Federal requirements regarding medical support enforcement..

Respondents: 54.

ANNUAL BURDEN ESTIMATES

Instrument	Number of respondents	Number of responses per respondent	Average burden hours per response	Total burden hours
OCSE–100	54	1	.72	39
Estimated Total Annual Burden Hours				39

In compliance with the requirements of Section 3506(c)(2)(A) of the Paperwork Reduction Act of 1995, the Administration for Children and Families is soliciting public comment on the specific aspects of the information collection described above. Copies of the proposed collection of information can be obtained and comments may be forwarded by writing to the Administration for Children and Families, Office of Administration, Office of Information Services, 370 L'Enfant Promanade, SW., Washington, DC 20447, Attn: ACF Reports Clearance Officer. All requests should be identified by the title information collection.

The Department specifically requests comments on: (a) Whether the proposed collection of information is necessary for the proper performance of the functions of the agency, including whether the information shall have practical utility; (b) the accuracy of the agency's estimate of the burden of the proposed collection of information; (c) the quality, utility, and clarity of the information to be collected; and (d) ways to minimize the burden of the collection of information on respondents, including through the use of automated collection techniques or other forms of information technology. Consideration will be given to comments and suggestions submitted within 60 days of this publication.

Dated: September 26, 2002.

Robert Sargis,

Reports Clearance Officer.

[FR Doc. 02–25002 Filed 10–1–02; 8:45 am]

BILLING CODE 4184–01–M

DEPARTMENT OF HEALTH AND HUMAN SERVICES

Administration for Children and Families

Proposed Information Collection Activity; Comment Request

Proposed Projects

Title: Child Care Case-Level Report.

OMB No.: 0970–0167.

Description: Section 658K of the Child Care and Development Block Grant Act of 1990 (Pub. L. 101–508, 42 U.S.C. 9858) requires that States and Territories submit monthly case-level data on the children and families receiving direct services under the Child Care and Development Fund. The implementing regulations for the statutorily required reporting are at 45 CFR 98.70. Case-level reports, submitted quarterly or monthly (at grantee option) include monthly sample or full population case-level data. The data elements to be included in these reports

are represented in the ACF–801. Disaggregate data is used to determine program and participant characteristics as well as costs and levels of child care services provided. This provides ACF with the information necessary to make reports to Congress, address national child care needs, offer technical assistance to grantees, meet performance measures, and conduct research. Consistent with the statute and regulations, ACF requests extension of the ACF–801.

Respondents: States, the District of Columbia, and Territories including Puerto Rico, Guam, the Virgin Islands, American Samoa, and the Northern Marianna Islands.

ANNUAL BURDEN ESTIMATES

Instrument	Number of respondents	Number of responses per respondent	Average burden hours per response	Total burden hours
ACF–801	56	D4	20	4,480
Estimated Total Annual Burden Hours				4,480

In compliance with the requirements of Section 3506(c)(2)(A) of the Paperwork Reduction Act of 1995, the Administration for Children and Families is soliciting public comment on the specific aspects of the information collection described above. Copies of the proposed collection of information can be obtained and comments may be forwarded by writing to the Administration for Children and Families, Office of Administration, Office of Information Services, 370 L'Enfant Promenade, SW., Washington, DC 20447, Attn: ACF Reports Clearance Officer. All requests should be identified by the title of the information collection.

The Department specifically requests comments on: (a) Whether the proposed collection of information is necessary for the proper performance of the functions of the agency, including whether the information shall have practical utility; (b) the accuracy of the agency's estimate of the burden of the proposed collection of information; (c) the quality, utility, and clarity of the information to be collected; and (d) ways to minimize the burden of the collection of information on respondents, including through the use of automated collection techniques or other forms of information technology. Consideration will be given to comments and suggestions submitted within 60 days of this publication.

Dated: September 26, 2002.

Robert Sargis,

Reports Clearance Officer.

[FR Doc. 02–25003 Filed 10–1–02; 8:45 am]

BILLING CODE 4184–01–M

DEPARTMENT OF HEALTH AND HUMAN SERVICES

Administration for Children and Families

Proposed Information Collection Activity; Comment Request

Proposed Projects

Title: Online Interstate Referral Guide (IRG).

OMB No.: 0970–0209.

Description: The IRG is an essential reference maintained by OCSE that provides States with an effective and efficient way of viewing and updating State profile, address, and FIPS code information by consolidating data available through numerous discrete sources into a single centralized, automated repository.

Respondents: State IV–D Child Support Programs.

ANNUAL BURDEN ESTIMATES

Instrument	Number of respondents	Number of responses per respondents	Average burden hours per response	Total burden hours
Online IRG	54	18	.3	292
Estimated Total Annual Burden Hours				292

In compliance with the requirements of Section 3056(c)(2)(A) of the Paperwork Reduction Act of 1995, the Administration for Children and Families is soliciting public comment on the specific aspects of the information collection described above. Copies of the proposed collection of information can be obtained and comments may be forwarded by writing to the Administration for Children and Families, Office of Administration, Office of Information Services, 370 L'Enfant Promenade, SW., Washington, DC 20447, Attn: AFC Reports Clearance Officer. All requests should be identified by the title of the information collection.

The Department specifically requests comments on: (a) Whether the proposed collection of information is necessary for the proper performance of the functions of the agency, including whether the information shall have practical utility; (b) the accuracy of the agency's estimate of the burden of the proposed collection of information; (c) the quality, utility, and clarity of the information to be collected; and (d) ways to minimize the burden of the collection of information on respondents, including through the use of automated collection techniques or other forms of information technology. Consideration will be given to comments and suggestions submitted within 60 days of this publication.

Dated: September 26, 2002.

Robert Sargis,

Reports Clearance Officer.

[FR Doc. 02–25004 Filed 10–1–02; 8:45 am]

BILLING CODE 4184–01–M

DEPARTMENT OF HEALTH AND HUMAN SERVICES

Food and Drug Administration

[Docket No. 02N–0063]

Agency Information Collection Activities; Proposed Collection; Comment Request: Consumer Surveys on Food and Dietary Supplement Labeling Issues

AGENCY: Food and Drug Administration, HHS.

ACTION: Notice.

SUMMARY: The Food and Drug Administration (FDA) is announcing an opportunity for public comment on the proposed collection of certain information by the agency. Under the Paperwork Reduction Act of 1995 (the PRA), Federal agencies are required to publish notice in the **Federal Register** concerning each proposed collection of information, including each proposed extension of an existing collection of information, and to allow 60 days for public comment in response to the notice. This notice solicits comments on surveys to study consumers' understanding of specific label statements for conventional foods and dietary supplements and the impact of such labeling on consumer practices, knowledge levels, and attitudes. In the **Federal Register** of July 8, 2002 (67 FR 45128), FDA published a notice announcing OMB's approval of this collection of information (OMB control number 0910–0492). Because this was an emergency approval that will expire on December 31, 2002, FDA in this notice is following the normal PRA clearance procedures by issuing this notice.

DATES: Submit written or electronic comments on the collection of information by December 2, 2002.

ADDRESSES: Submit electronic comments on the collection of information to http://www.accessdata.fda.gov/scripts/oc/dockets/edockethome.cfm. Submit written comments on the collection of information to the Dockets Management Branch (HFA–305), Food and Drug Administration, 5630 Fishers Lane, rm. 1061, Rockville, MD 20852. All comments should be identified with the docket number found in brackets in the heading of this document.

FOR FURTHER INFORMATION CONTACT: Peggy Schlosburg, Office of Information Resources Management (HFA–250), Food and Drug Administration, 5600 Fishers Lane, Rockville, MD 20857, 301–827–1223.

SUPPLEMENTARY INFORMATION: Under the PRA (44 U.S.C. 3501–3520), Federal agencies must obtain approval from the Office of Management and Budget (OMB) for each collection of information they conduct or sponsor. ''Collection of information'' is defined in 44 U.S.C. 3502(3) and 5 CFR 1320.3(c) and includes agency requests or requirements that members of the public submit reports, keep records, or provide information to a third party. Section 3506(c)(2)(A) of the PRA (44 U.S.C. 3506(c)(2)(A)) requires Federal agencies to provide a 60-day notice in the **Federal Register** concerning each proposed collection of information, including each proposed extension of an existing collection of information, before submitting the collection to OMB for approval. To comply with this requirement, FDA is publishing notice of the proposed collection of information set forth in this document.

With respect to the following collection of information, FDA invites comments on: (1) Whether the proposed collection of information is necessary for the proper performance of FDA's functions, including whether the information will have practical utility; (2) the accuracy of FDA's estimate of the burden of the proposed collection of information, including the validity of the methodology and assumptions used; (3) ways to enhance the quality, utility, and clarity of the information to be collected; and (4) ways to minimize the burden of the collection of information on respondents, including through the use of automated collection techniques, when appropriate, and other forms of information technology.

Consumer Surveys on Food and Dietary Supplement Labeling Issues (OMB Control Number 910–0492)—Extension

FDA is requesting an extension of the OMB approval of consumer surveys to help FDA's Center for Food Safety and Applied Nutrition formulate decisions and policies affecting the labeling of conventional foods and dietary supplements. Determining how consumers are likely to interpret various kinds of claims, disclaimers, warnings, caution statements, and notice statements that might appear in labeling is critical to agency decisionmaking under the Federal Food, Drug, and Cosmetic Act and the first amendment. It is often necessary to test actual or proposed labeling statements in realistic situations with typical consumers to determine what these label statements are communicating to consumers.

FDA or its contractor will collect and use information gathered from telephone, mail, shopping mall intercept or Internet surveys to evaluate how consumers understand and respond to existing label statements, label statements proposed by industry or consumers, and other label statements that are under consideration as part of FDA's policy development process. Potential respondents to the surveys will be individual consumers either randomly chosen to represent specified populations or randomly assigned to experimental treatment conditions to control for the effects of individual differences in the population on the interpretation of label statements. In all instances, FDA will strive to collect a representative sample of individuals from the overall population or from relevant population groups, as appropriate. FDA's general selection method will use stratification, with random sampling within the strata, to achieve representativeness for both overall populations and sensitive subpopulations, such as at-risk individuals or user segments. In the rare cases where geography is a limiting factor, FDA will use population-based cluster sampling to limit Government expense while preserving the statistical properties of the sample.

Respondents will provide background information and respond to package labels that contain the variations of label statements to be tested. Measures will include both self-reported comprehension and acceptance as well as direct behavioral measures of consumer use and understanding of the package labeling.

FDA will use the information from the surveys in evaluating regulatory and policy options with respect to labeling. The agency often lacks empirical data about how consumers understand and respond to statements they might see in product labeling. The information gathered from such surveys can be used to test consumer comprehension and behavioral impact of various label statements and formats, taking into account the existing distribution of behavior, knowledge and attitudes in the population that provides the context for understanding such statements. The surveys will help FDA assess consumer reactions to existing and proposed label statements.

FDA estimates the burden of this collection of information as follows:

TABLE 1.—ESTIMATED ANNUAL REPORTING BURDEN[1]

Type of Survey	No. of Respondents	Annual Frequency per Response	Total Annual Responses	Hours per Response	Total Hours
Mail questionnaire	1,000	1	1,000	1	1,000
Telephone survey	2,000	1	2,000	.5	1,000
Internet or mall intercept survey	4,000	1	4,000	.5	2,000
Total					4,000

[1]There are no capital costs or operating and maintenance costs associated with this collection of information.

These estimates assume that as many as one mail survey project, one telephone survey project, and two internet or mall intercept survey projects may be done on an annual basis. Estimates are based on the expected number of respondents necessary to obtain a statistically significant representation of important consumer segments (e.g., users of relevant regulated products, at risk population groups) and the number of labeling options that may need to be tested.

Dated: September 24, 2002..

Margaret M. Dotzel,

Associate Commissioner for Policy.

[FR Doc. 02–25079 Filed 10–1–02; 8:45 am]

BILLING CODE 4160–01–S

DEPARTMENT OF HEALTH AND HUMAN SERVICES

Food and Drug Administration

[Docket No. 97D–0530]

FDA Modernization Act of 1997: Modifications to the List of Recognized Standards, Recognition List Number: 007

AGENCY: Food and Drug Administration, HHS.

ACTION: Notice.

SUMMARY: The Food and Drug Administration (FDA) is announcing a publication containing modifications the agency is making to the list of standards FDA will recognize for use in premarket reviews (FDA Recognized Consensus Standards). This publication, entitled ''Modifications to the List of Recognized Standards, Recognition List Number: 007'' (recognition list number: 007), will assist manufacturers who elect to declare conformity with consensus standards to meet certain requirements for medical devices.

DATES: The recognition of standards announced in this document will become effective October 2, 2002. Submit written comments concerning this document at any time.

ADDRESSES: Submit written requests for single copies on a 3.5″ diskette of ''Modifications to the List of Recognized Standards, Recognition List Number: 007'' to the Division of Small Manufacturers Assistance (DSMA), Center for Devices and Radiological Health (CDRH) (HFZ–220), Food and Drug Administration, 1350 Piccard Dr., Rockville, MD 20850. Send two self-addressed adhesive labels to assist that office in processing your requests, or fax your request to 301–443–8818. Submit written comments concerning this document to the contact person (see **FOR FURTHER INFORMATION CONTACT**). Identify comments with the docket number found in brackets in the heading of this document. You may access this document on FDA's Internet site at *http://www.fda.gov/cdrh/fedregin.html*. See section V of this document for electronic access to the searchable database for the current list of ''FDA Recognized Consensus Standards,'' including recognition list number: 007 modifications, and other standards related information.

FOR FURTHER INFORMATION CONTACT: Carol L. Herman, Center for Devices and Radiological Health (HFZ–84), Food and Drug Administration, 2094 Gaither Rd., Rockville, MD 20850, 301–594–4766, ext. 156.

SUPPLEMENTARY INFORMATION:

I. Background

Section 204 of the Food and Drug Administration Modernization Act of 1997 (FDAMA) (Public Law 105–115) amended section 514 of the Federal Food, Drug, and Cosmetic Act (the act) (21 U.S.C. 360d). Amended section 514 of the act allows FDA to recognize consensus standards, developed by international and national organizations, for use in satisfying portions of device premarket review submissions or other requirements.

In a notice published in the **Federal Register** of February 25, 1998 (63 FR 9561), FDA announced the availability of guidance entitled ''Recognition and Use of Consensus Standards.'' This notice described how FDA will implement its standards program recognizing the use of certain standards and provided the initial list of recognized standards.

In **Federal Register** notices published on October 16, 1998 (63 FR 55617); July 12, 1999 (64 FR 37546); November 15, 2000 (65 FR 69022); May 7, 2001 (66 FR 23032), and January 14, 2002 (67 FR 1774), FDA modified its initial list of recognized standards. These notices described the addition, withdrawal, and revision of certain standards recognized by FDA.

FDA maintains the agency's current list of ''FDA Recognized Consensus Standards'' in a searchable database that may be accessed directly at FDA's Internet site at *http://www.accessdata.fda.gov/scripts/cdrh/cfdocs/cfStandards/search.cfm*. FDA will incorporate the modifications and minor revisions described in this notice into the database and this recognition of consensus standards will be effective upon publication in the **Federal Register**. FDA will announce additional modifications and minor revisions to the list of recognized consensus standards, as needed, in the **Federal Register** once a year, or more often, if necessary.

For each of the recognized standards, FDA provides in the database a supplementary information sheet that includes information such as:

1. Devices affected by the standard;
2. Processes affected by the standard (premarket notification (510(k), premarket approval (PMA), investigational device exemption (IDE), product development protocol (PDP), and quality systems regulation (QSR));
3. Extent of recognition (all or part of the standard, for what purpose the standard is recognized);
4. Related citations in the Code of Federal Regulations that identify the devices covered;
5. Related product codes that are used by FDA to identify the devices covered; and
6. Guidances relevant to the devices affected by the standard.

II. Modifications to the List of Recognized Standards, Recognition List Number: 007

FDA is announcing the addition, withdrawal, correction, and revision of certain consensus standards the agency

will recognize for use in satisfying portions of premarket review submissions for devices. FDA will incorporate these modifications in the list of ''FDA Recognized Consensus Standards'' in the agency's searchable database. FDA is also establishing two new categories of recognized standards: (1) ''Materials'' and (2) ''tissue engineering'' standards. The tables below reflect the changes FDA is making to the list of recognized standards. These changes include:

- Withdrawn and replaced with a newer version
- Withdrawn and transferred to materials
- Contact person
- Transition statement added to the extend of recognition
- Citations and product codes
- Withdrawn
- Title correction
- Product codes and relevant guidance
- Devices affected
- Devices affected and type of standard

The following tables are divided by standards categories, include the two new categories of materials and tissue engineering standards, and identify the old item number, the name of the standard, the specific change, and the new replacement number, if any.

A. Biocompatibility

Old Item No.	Standard	Change	Replacement Item No.
12	ASTM F813–01, Standard Practice for Direct Contact Cell Culture Evaluation of Materials for Medical Devices	Withdrawn and replaced with newer version 56	
13	ASTM E895–84 (2001)e1, Standard Test Method for Agar Diffusion Cell Culture Screening for Cytotoxicity	Withdrawn and replaced with newer version	57
46	USP 25—NF20, Biological Tests <87>, Biological Reactivity Test, In Vitro—Direct Contact Test	Withdrawn and replaced with newer version	58
47	USP 25—NF20, Biological Tests <88>, Biological Reactivity Test, In Vitro—Elution Test	Withdrawn and replaced with newer version	59
48	USP 25—NF20, Biological Tests <88>, Biological Reactivity Test, In Vivo, Classification of Plastics—Simple Preparation	Withdrawn and replaced with newer version	60
49	USP 25—NF20, Biological Tests <88>, Biological Reactivity Test, In Vivo—Intracutaneous Test	Withdrawn and replaced with newer version	61
50	USP 25—NF20, Biological Tests <88>, Biological Reactivity Test, In Vivo—Systemic Injection Test	Withdrawn and replaced with newer version	62
55	ANSI/AAMI/ISO 10993–6:1995/(R)2001: Biological evaluation of medical devices—Part 6: Test for local effects after implantation	Withdrawn and replaced with newer version	63
54	ANSI/AAMI/ISO 10993–5: Biological evaluation of medical devices—Part 5: Tests for in vitro cytotoxicity	Withdrawn and replaced with change in extent of recognition	64

B. Cardiovascular/Neurology

Old Item No.	Standard	Change	Replacement Item No.
12	ASTM F961–96, Standard Specification for Cobalt-35 Nickel-20 Chromium-10 Molybdenum Alloy Forgings for Surgical Implants [UNS R30035]	Withdrawn and transferred to materials	
21	ASTM F75–01, Standard Specification for Cobalt-28 Chromium-6 Molybdenum Alloy Castings and Casting Alloy for Surgical Implant (UNS R30075)	Withdrawn and transferred to materials	
22	ASTM F90–01, Standard Specification for Wrought Cobalt-20 Chromium-15 Tungsten-10 Nickel Alloy for Surgical Implant Applications (UNS R30605)	Withdrawn and transferred to materials	

Old Item No.	Standard	Change	Replacement Item No.
24	ASTM F560–98, Standard Specification for Unalloyed Tantalum for Surgical Implant Applications (UNS R05200, UNS R05400)	Withdrawn and transferred to materials	
28	ASTM F1058–97, Standard Specification for Wrought Cobalt-Chromium-Nickel-Molybdenum-Iron Alloy for Surgical Implant Applications	Withdrawn and transferred to materials	
34	ASTM F138–00, Standard Specification for Wrought 18 Chromium-14 Nickel-2.5 Molybdenum Stainless Bar and Wire for Surgical Implants (UNS S31673)	Withdrawn and transferred to materials	
35	ASTM F562–00, Standard Specification for Wrought Cobalt-35 Nickel-20 Chromium-10 Molybdenum Alloy for Surgical Implant Applications	Withdrawn and transferred to materials	
36	ASTM F136–98e1, Standard Specification for Wrought Titanium-6 Aluminum-4 Vanadium ELI (Extra Low Interstitial) Alloy (UNS R56401) for Surgical Implant Applications	Withdrawn and transferred to materials	

C. Dental/ENT

Old Item No.	Standard	Change	Replacement Item No.
01	ASTM F67–00, Standard Specification for Unalloyed Titanium for Surgical Implant Applications (UNS R50250, UNS R50550, UNS R50700)	Withdrawn and transferred to materials	
02	ASTM F75–01, Standard Specification for Cobalt-28 Chromium-6 Molybdenum Alloy Castings and Casting Alloy for Surgical Implant (UNS R 30075)	Withdrawn and transferred to materials	
03	ASTM F90–01, Standard Specification for Wrought Cobalt-20 Chromium-15 Tungsten-10 Nickel Alloy for Surgical Implant Applications (UNS R30605)	Withdrawn and transferred to materials	
04	ASTM F136–98e1, Standard Specification for Wrought Titanium-6 Aluminum-4 Vanadium ELI (Extra Low Interstitial) Alloy (UNS R56401) for Surgical Implant Applications	Withdrawn and transferred to materials	
05	ASTM F138–00, Standard Specification for Wrought 18 Chromium-14 Nickel-2.5 Molybdenum Stainless Bar and Wire for Surgical Implants (UNS S31673)	Withdrawn and transferred to materials	
06	ASTM F139–00, Standard Specification for Wrought 18 Chromium-14 Nickel-2.5 Molybdenum Stainless Steel Sheet and Strip for Surgical Implants (UNS S31673)	Withdrawn and transferred to materials	
07	ASTM F562–00, Standard Specification for Wrought Cobalt-35 Nickel-20 Chromium-10 Molybdenum Alloy for Surgical Implant Applications	Withdrawn and transferred to materials	
08	ASTM F620–00, Standard Specification for Alpha Beta Titanium Alloy Forgings for Surgical Implants	Withdrawn and transferred to materials	
09	ASTM F621–97, Standard Specification for Stainless Steel Forgings for Surgical Implants	Withdrawn and transferred to materials	
10	ASTM F688–00, Standard Specification for Wrought Cobalt-35 Nickel-2.5 Molybdenum Alloy Plate, Sheet, and Foil for Surgical Implants (UNS R30035)	Withdrawn and transferred to materials	

Old Item No.	Standard	Change	Replacement Item No.
11	ASTM F745–00, Standard Specification for 18 Chromium-12.5 Nickel-2.5 Molybdenum Stainless Steel for Cast and Solution-Annealed Surgical Implant Applications	Withdrawn and transferred to materials	
12	ASTM F799–99, Standard Specification for Cobalt-28 Chromium-6 Molybdenum Alloy Forgings for Surgical Implants (UNS R31537, R31538, R31539)	Withdrawn and transferred to materials	
13	ASTM F961–96, Standard Specification for Cobalt-35 Nickel-20 Chromium-10 Molybdenum Alloy Forgings for Surgical Implants [UNS R30035]	Withdrawn and transferred to materials	
14	ASTM F1088–87 (1992)e1, Standard Specification for Beta-Tricalcium Phosphate for Surgical Implantation	Withdrawn and transferred to materials	
15	ASTM F1091–91(2000), Standard Specification for Wrought Cobalt-20 Chromium-15 Tungsten-10 Nickel Alloy Surgical Fixation Wire (UNS R 30605)	Withdrawn and transferred to materials	
16	ASTM F1108–97a, Standard Specification for Ti6A14V Alloy Castings for Surgical Implants (UNS R56406)	Withdrawn and transferred to materials	
17	ASTM F1185–88(1993)e1, Standard Specification for Composition of Ceramic Hydroxylapatite for Surgical Implants	Withdrawn and transferred to materials	
18	ASTM F1295–01, Standard Specification for Wrought Titanium-6 Aluminum-7 Niobium Alloy for Surgical Implant Applications (UNS R56700)	Withdrawn and transferred to materials	
19	ASTM F1314–01, Standard Specification for Wrought Nitrogen Strengthened 22 Chromium-13 Nickel-5 Manganese-2.5 Molybdenum Stainless Steel Alloy Bar and Wire for Surgical Implants (UNS S20910)	Withdrawn and transferred to materials	
20	ASTM F1341–99, Standard Specification for Unalloyed Titanium Wire UNS R50250, UNS R50400, UNS R50500, UNS R50700, for Surgical Implant Applications	Withdrawn and transferred to materials	
21	ASTM F1350–01, Standard Specification for Wrought 18 Chromium-14 Nickel-2.5, Molybdenum Stainless Steel Surgical Fixation Wire (UNS S31673)	Withdrawn and transferred to materials	
23	ASTM F1472–00, Standard Specification for Wrought Titanium-6 Aluminum-4 Vanadium Alloy (UNS R56400) for Surgical Implant Applications	Withdrawn and transferred to materials	
24	ASTM F1537–00, Standard Specification for Wrought Cobalt-28-Chromium-6-Molybdenum Alloy for Surgical Implants (UNS R31537, UNS R31538, and UNS R31539)	Withdrawn and transferred to materials	
25	F1580–95e1, Standard Specification for Titanium and Titanium-6% Aluminum-4% Vanadium Alloy Powders for Coatings of Surgical Implants	Withdrawn and transferred to materials	
26	ASTM F1586–02, Standard Specification for Wrought Nitrogen Strengthened 21 Chromium-Nickel-3 Manganese-2.5 Molybdenum Stainless Steel Bar for Surgical Implants (UNS S31675)	Withdrawn and transferred to materials	
27	ASTM F1609–95, Standard Specification for Calcium Phosphate Coatings for Implantable materials	Withdrawn and transferred to materials	
28	ASTM F1713–96, Standard Specification for Wrought Titanium-13 Niobium-13 Zirconium Alloy for Surgical Implant Applications	Withdrawn and transferred to materials	
42	ANSI/ADA Specification No. 3:1994, Dental Impression Compound	Contact person	42

Old Item No.	Standard	Change	Replacement Item No.
44	ANSI/ADA Specification No. 11:1968, Agar Impression Material	Contact person	44
45	ANSI/ADA Specification No. 13:1981, Denture Cold-Curing Repair Resin	Contact person	45
48	ANSI/ADA Specification No. 16:1989, Dental Impression Paste Zinc Oxide Eugenol Type	Contact person	48
49	ANSI/ADA Specification No. 17:1983, Denture Base Temporary Relining Resin	Contact person	49
50	ANSI/ADA Specification No. 18:1992, Alginate Impression Materials	Contact person	50
51	ANSI/ADA Specification No. 20:1968, Dental Duplicating Material	Contact person	51
52	ANSI/ADA Specification No. 27:1993, Resin-Based Filling Materials	Contact person	52
53	ANSI/ADA Specification No. 30:1990, Dental Zinc Oxide-Eugenol and Zinc Oxide Non-Eugenol Cements	Contact person	53
55	ANSI/ADA Specification No. 48:1983, Ultraviolet Activator and Disclosing Lights	Contact person, update to processes impacted to include quality system regulation	55
56	ANSI/ADA Specification No. 57:1993, Endodontic Sealing Materials	Contact person, update to processes impacted to include quality system regulation	56
59	ANSI/ADA Specification No. 80:2001, Color Stability Test Procedures	Withdrawn and replaced with newer version, update to processes impacted to include quality system regulation	91
60	ANSI/ADA Specification No. 96:1994, Dental-Water-Based Cements	Contact person, update to processes impacted to include quality system regulation	60
62	ISO 1563:1990, Dental Alginate Impression Material	Contact person, update to processes impacted to include quality system regulation	62
63	ISO 1564:1995, Dental Aqueous Impression Materials Based on Agar	Contact person, update to processes impacted to include quality system regulation	63
64	ISO 3107:1998, Dental Zinc Oxide Eugenol Cements and Zinc Oxide Non-Eugenol Cements	Contact person, update to processes impacted to include quality system regulation	64
65	ISO 3336:1993, Dentistry—Synthetic Polymer Teeth	Contact person, update to processes impacted to include quality system regulation	65
66	ISO 4049:1998, Dentistry—Resin-Based Filling Materials	Contact person, update to processes impacted to include quality system regulation	66

Old Item No.	Standard	Change	Replacement Item No.
69	ISO 6872:1995, Amendment 1-1997 Dental Ceramic	Contact person, update to processes impacted to include quality system regulation	69
71	ISO 6876:1986, Dental Root Canal Sealing Materials	Contact person, update to processes impacted to include quality system regulation	71
72	ISO 6877:1995, Dental Root Canal Obturating Points	Contact person, update to processes impacted to include quality system regulation	72
80	ISO 9917:1991, Dental Water-Based Cements	Contact person, update to processes impacted to include quality system regulation	80
81	ISO 10139-1:1991, Dentistry—Resilient Lining Materials for Removable Dentures Part 1: Short Term Materials	Contact person, Update to CDRH Offices to include OC/DE2, and update to processes impacted to include quality system regulation	81
82	ISO 10477:1998, Dentistry—Polymer-Based Crown and Bridge Materials	Contact person, update to processes impacted to include quality system regulation	82
85	ANSI/ADA Specification 15:1999, Synthetic Resin Teeth	Contact person, update to processes impacted to include quality system regulation	85
86	ANSI/ADA Specification No. 38:2000, Metal-Ceramic System	Contact person, update to processes impacted to include quality system regulation	86
87	ANSI/ADA Specification No. 69:1999, Dental Ceramic	Contact person, update to processes impacted to include quality system regulation	87
88	ANSI/ADA Specification No. 78:2000, Endodontic Obturating Points	Contact person	88
89	ANSI/ASA Specification No. 53:1999, Polymer-Based Crown and Bridge Resins	Contact Person, update to processes impacted to include quality system regulation	89

D. General

Old Item No.	Standard	Change	Replacement Item No.
28	IEC 60601–1–2 (Second Edition, 2001), Medical Electrical Equipment—Part1: General Requirements for Safety; Electomagnetic Compatibility—Requirements and Tests	Transition statement added to the extent of recognition	28

E. General Hospital/General Plastic Surgery

Old Item No.	Standard	Change	Replacement Item No.
13	ISO 595/1 First Edition 1986–12–15, Reusable All Glass or Metal-and-Glass Syringes for Medical Use, Part 1: Dimensions	Citations and product codes	13
49	ASTM D6355–98, Standard Test Method for Human Repeat Insult Patch Testing of Medical Gloves	Withdrawn	
57	USP 24 <11>, Sterile Water for Injection	Withdrawn	
62	ISO 8536–6, First Edition, 1996–04–01, Infusion Equipment for Medical Use—Part 6: Freeze Drying Closures for Infusion Bottles	Citations and product codes	62
63	ISO 8536–7, Second Edition, 1999–09–01, Infusion Equipment, Caps made of Aluminum-Plastic Combinations for Infusion Bottles	Citations and product codes	63
76	ISO 1135–4, Second Edition, 1998–03–15, Transfusion Equipment for Medical Use—Part 4: Transfusion Sets for Single Use	Citations and product codes	76
80	ASTM E1112–00, Standards Specification for Electronic Thermometers for Intermittent Determinations of Patient Temperatures	Contact person	80
41	USP 25, Nonabsorbable Surgical Sutures	Withdrawn and replaced with newer version	82
50	ASTM D6319–00ae3, Standard Specification for Nitrile Examination Gloves for Medical Application	Withdrawn and replaced with newer version	83
51	ASTM D6124–01, Standard Test Method for Residual Powder on Medical Globes	Withdrawn and replaced with newer version	84
52	ASTM D5250–00e4, Standard Specification for Poly (vinyl chloride) Gloves for Medical Application	Withdrawn and replaced with newer version	85
54	ASTM D3578–01ae2, Standard Specification for Rubber Examination Gloves	Withdrawn and replaced with newer version	86
55	ASTM D3577–01ae2, Standard Specification for Rubber Surgical Gloves	Withdrawn and replaced with newer version	87
56	USP 25 <11>, Sterile Sodium Chloride for Irrigation	Withdrawn and replaced with newer version	88
58	USP 25, Absorbable Surgical Sutures	Withdrawn and replaced with newer version	89
59	USP 25 <881>, Tensile Strength	Withdrawn and replaced with newer version	90
60	USP 25 <861>, Sutures—Diameter	Withdrawn and replaced with newer version	91
61	USP 25 <871>, Sutures Needle Attachment	Withdrawn and replaced with newer version	92

F. Materials

Old Item No.	Standard	Change	Replacement Item No.
Dental 01, Ortho 123	ASTM F67–00, Standard Specification for Unalloyed Titanium for Surgical Implant Applications (UNS R50250, UNS R50550, UNS R 50700)	Transferred from dental/ENT and orthopaedics	01

Old Item No.	Standard	Change	Replacement Item No.
Cardio 21, Dental 02, Ortho 86	ASTM F75–01, Standard Specification for Cobalt-28 Chromium-6 Molybdenum Alloy Castings and Casting Alloy for Surgical Implant (UNS R30075)	Transferred from cardiovascular/neurology dental/ENT and orthopaedics	02
Cardio 22, Dental 03, Ortho 87	ASTM F90–01, Standard Specification for Wrought Cobalt-20 Chromium-15 Tungsten-10 Nickel Alloy for Surgical Implant Applications (UNS R30605)	Transferred from cardiovascular neurology, dental/ENT and orthopaedics	03
Cardio 36, Dental 04, Ortho 88	ASTM F136–98e1, Standard Specification for Wrought Titanium-6 Aluminum-4 Vanadium ELI (Extra Low Interstitial) Alloy (UNS R56401) for Surgical Implant Applications	Transferred from cardiovascular/neurology, dental/ENT and orthopaedics	04
Cardio 34, Dental 05, Ortho 144	ASTM F138–00, Standard Specification for Wrought 18 Chromium-14 Nickel-2.5 Molybdenum Stainless Bar and Wire for Surgical Implants (UNS S31673)	Transferred from cardiovascular/neurology, dental/ENT and orthopaedics	05
Dental 06, Ortho 125	ASTM F139–00, Standard Specification for Wrought 18 Chromium-14 Nickel-2.5 Molybdenum Stainless Steel Sheet and Strip for Surgical Implants (UNS S31673)	Transferred from dental/ENT and orthopaedics	06
Cardio 24, Ortho 90	ASTM F560–98, Standard Specification for Unalloyed Tantalum for Surgical Implant Applications (UNS R05200, UNS R05400)	Transferred from cardiovascular/neurology and orthopaedics	07
Cardio 35, Dental 07, Ortho 127	ASTM F562–00, Standard Specification for Wrought Cobalt-35 Nickel-20 Chromium-10 Molybdenum Alloy for Surgical Implant Applications	Transferred from cardiovascular/neurology, dental/ENT and orthopaedics	08
Ortho 146	ASTM F603–00, Standard Specification for High-Purity Dense Aluminum Oxide for Surgical Implant Application	Transferred from orthopaedics	10
Dental 08, Ortho 147	ASTM F620–00, Standard Specification for Alpha Beta Titanium Alloy Forgings for Surgical Implants	Transferred from dental/ENT and orthopaedics	11
Dental 09, Ortho 97	ASTM F621–97, Standard Specification for Stainless Steel Forgings for Surgical Implants	Transferred from dental/ENT and orthopaedics	12
Ortho 148	ASTM F648–00, Standard Specification for Ultra-High-Molecular-Weight Polyethylene Powder and Fabricated Form for Surgical Implants	Transferred from orthopaedics	13
Dental 10, Ortho 128	ASTM F688–00, Standard Specification for Wrought Cobalt-35 Nickel-2.5 Molybdenum Alloy Plate, Sheet, and Foil for Surgical Implants (UNS R30035)	Transferred from dental/ENT and orthopaedics	14
Dental 11, Ortho 129	ASTM F745–00, Standard Specification for 18 Chromium-12.5 Nickel-2.5 Molybdenum Stainless Steel for Cast and Solution-Annealed Surgical Implant Applications	Transferred from dental/ENT and orthopaedics	15
Ortho 149	ASTM F746–87 (1999), Standard Test Method for Pitting or Crevice Corrosion of Metallic Surgical Implant Materials	Transferred from orthopaedics	16
Dental 12, Ortho 130	ASTM F799–99, Standard Specification for Cobalt-28 Chromium-6 Molybdenum Alloy Forgings for Surgical Implants (UNS R31537, R31538, R31539)	Transferred from dental/ENT and orthopaedics	17
Ortho 27	ASTM F899–95, Standard Specification for Stainless Steel Billet, Bar, and Wire for Surgical Instruments	Transferred from orthopaedics	18
Cardio 12, Dental 13, Ortho 28	ASTM F961–96, Standard Specification for Cobalt-35 Nickel-20 Chromium-10 Molybdenum Alloy Forgings for Surgical Implants [UNS R30035]	Transferred from cardiovascular/neurology, dental/ENT and orthopaedics	19

Old Item No.	Standard	Change	Replacement Item No.
Cardio 28	ASTM F1058–97, Standard Specification for Wrought Cobalt-Chromium-Nickel-Molybdenum-Iron Alloy for Surgical Implant Applications	Transferred from cardio-vascular/neurology	20
Dental 14, Ortho 132	ASTM F1088–87 (1992)e1, Standard Specification for Beta-Tricalcium Phosphate for Surgical Implantation	Transferred from dental/ ENT and orthopaedics	21
Dental 15, Ortho 151	ASTM F1091–91(2000), Standard Specification for Wrought Cobalt-20 Chromium-15 Tungsten-10 Nickel Alloy Surgical Fixation Wire (UNS R 30605)	Transferred from dental/ ENT and orthopaedics	22
Dental 16, Ortho 133	ASTM F1108–97a, Standard Specification for Ti6A14V Alloy Castings for Surgical Implants (UNS R56406)	Transferred from dental/ ENT and orthopaedics	23
Dental 17, Ortho 109	ASTM F1185–88(1993)e1, Standard Specification for Composition of Ceramic Hydroxylapatite for Surgical Implants	Transferred from dental/ ENT and orthopaedics	24
Dental 18, Ortho 134	ASTM F1295–01, Standard Specification for Wrought Titanium-6 Aluminum-7 Niobium Alloy for Surgical Implant Applications (UNS R56700)	Transferred from dental/ ENT and orthopaedics	25
Dental 19, Ortho 40	ASTM F1314–01, Standard Specification for Wrought Nitrogen Strengthened 22 Chromium-13 Nickel-5 Manganese-2.5 Molybdenum Stainless Steel Alloy Bar and Wire for Surgical Implants (UNS S20910)	Transferred from dental/ ENT and orthopaedics	26
Dental 20, Ortho 135	ASTM F1341–99, Standard Specification for Unalloyed Titanium Wire UNS R50250, UNS R50400, UNS R50500, UNS R50700, for Surgical Implant Applications	Transferred for dental/ ENT and orthopaedics	27
Dental 21, Ortho 154	ASTM F1350–01, Standard Specification for Wrought 18 Chromium-14 Nickel-2.5, Molybdenum Stainless Steel Surgical Fixation Wire (UNS S31673)	Transferred from dental/ ENT and orthopaedics	28
Dental 23, Ortho 136	ASTM F1472–00, Standard Specification for Wrought Titanium-6 Aluminum-4 Vanadium Alloy (UNS R56400) for Surgical Implant Applications	Transferred from dental/ ENT and orthopaedics	29
Dental 24, Ortho 137	ASTM F1537–00, Standard Specification for Wrought Cobalt-28-Chromium-6-Molybdenum Alloy for Surgical Implants (UNS R31537, UNS R31538, and UNS R31539)	Transferred from dental/ ENT and orthopaedics	30
Dental 25, Ortho 139	ASTM F1580–95e1, Standard Specification for Titanium and Titanium-6% Aluminum-4% Vanadium Alloy Powders for Coatings of Surgical Implants	Transferred from dental/ ENT and orthopaedics	31
Dental 26, Ortho 50	ASTM F1586–02, Standard Specification for Wrought Nitrogen Strengthened 21 Chromium-Nickel-3 Manganese-2.5 Molybdenum Stainless Steel Bar for Surgical Implants (UNS S31675)	Transferred from dental/ ENT and orthopaedics	32
Dental 27, Ortho 51	ASTM F1609–95, Standard Specification for Calcium Phosphate Coatings for Implantable Materials	Transferred from dental/ ENT and orthopaedics	33
Ortho 54	ASTM F1659–95, Standard Test Method for Bending and Shear Testing of Calcium Phosphate Coatings on Solid Metallic Substrates	Transferred from orthopaedics	34
Dental 28, Ortho 56	ASTM F1713–96, Standard Specification for Wrought Titanium-13 Niobium-13 Zirconium Alloy for Surgical Implant Applications	Transferred from dental /ENT and orthopaedics	35
Ortho 116	ASTM F1801–97, Standard Recommended Practice for Corrosion Fatigue Testing of Metallic Implant Materials	Transferred from orthopaedics	36
Rad 65	ASTM F2052–00, Standard Test Method for Measurement of Magnetically Induced Displacement Force on Passive Implants in the Magnetic Resonance Environment	Transferred from radiology	39

G. Obstetrics and Gynecology (OB-GYN)/Gastroenterology

Old Item No.	Standard	Change	Replacement Item No.
08	ISO 4047–1: 1996(E): Rubber Condoms—Part 1: Requirements	Withdrawn and replaced with newer version	26
09	ISO 4074–2: 1994(E): Rubber Condoms—Part 2: Determination of Length	Withdrawn and replaced with newer version	26
10	ISO 4047–3: 1994(E): Rubber Condoms—Part 3: Determination of Width	Withdrawn and replaced with newer version	26
11	ISO 4047–5: 1996(E): Rubber Condoms—Part 5: Testing for Holes—Water Leak Test	Withdrawn and replaced with newer version	26
12	ISO 4074–6: 1996(E): Rubber Condoms—Part 6: Determination of Bursting Volume and Pressure	Withdrawn and replaced with newer version	26
13	ISO 4074–7: 1996(E): Rubber Condoms—Part 7: Oven Conditioning	Withdrawn and replaced with newer version	26
14	ISO 4047–9: 1996(E): Rubber Condoms—Part 9: Determination of Tensile Properties	Withdrawn and replaced with newer version	26

H. Orthopaedics

Old Item No.	Standard	Change	Replacement Item No.
27	ASTM F899–95, Standard Specification for Stainless Steel Billet, Bar, and Wire for Surgical Instruments	Withdrawn and transferred to materials	
28	ASTM F961–96, Standard Specification for Cobalt-35 Nickel-20 Chromium-10 Molybdenum Alloy Forgings for Surgical Implants [UNS R30035]	Withdrawn and Transferred to materials	
40	ASTM F1314–01, Standard Specification for Wrought Nitrogen Strengthened 22 Chromium-13 Nickel-5 Manganese-2.5 Molybdenum Stainless Steel Alloy Bar and Wire for Surgical Implants (UNS S20910)	Withdrawn and Transferred to materials	
50	ASTM F1586–02, Standard Specification for Wrought Nitrogen Strengthened 21 Chromium-Nickel-3 Manganese-2.5 Molybdenum Stainless Steel Bar for Surgical Implants (UNS S31675)	Withdrawn and Transferred to materials	
51	ASTM F1609–95, Standard Specification for Calcium Phosphate Coatings for Implantable Materials	Withdrawn and Transferred to materials	
54	ASTM F1659–95, Standard Test Method for Bending and Shear Testing of Calcium Phosphate Coatings on Solid Metallic Substrates	Withdrawn and Transferred to materials	
56	ASTM F1713–96, Standard Specification for Wrought Titanium-13 Niobium-13 Zirconium Alloy for Surgical Implant Applications	Withdrawn and Transferred to materials	
86	ASTM F75–01, Standard Specification for Cobalt-28 Chromium-6 Molybdenum Alloy Castings and Casting Alloy for Surgical Implant (UNS R30075)	Withdrawn and transferred to Materials	

Old Item No.	Standard	Change	Replacement Item No.
87	ASTM F90–01, Standard Specification for Wrought Cobalt-20 Chromium-15 Tungsten-10 Nickel Alloy for Surgical Implant Applications (UNS R30605)	Withdrawn and Transferred to materials	
88	ASTM F136–98e1, Standard Specification for Wrought Titanium-6 Aluminum-4 Vanadium ELI (Extra Low Interstitial) Alloy (UNS R56401) for Surgical Implant Applications	Withdrawn and transferred to Materials	
90	ASTM F560–98, Standard Specification for Unalloyed Tantalum for Surgical Implant Applications (UNS R05200, UNS R05400)	Withdrawn and Transferred to materials	
97	ASTM F621–97, Standard Specification for Stainless Steel Forgings for Surgical Implants	Withdrawn and Transferred to materials	
109	ASTM F1185–88(1993)e1, Standard Specification for Composition of Ceramic Hydroxylapatite for Surgical Implants	Withdrawn and transferred to Materials	
116	ASTM F1801–97, Standard Recommended Practice for Corrosion Fatigue Testing of Metallic Implant Materials	Withdrawn and transferred to materials	
123	ASTM F67–00, Standard Specification for Unalloyed Titanium for Surgical Implant Applications (UNS R50250, UNS R50550, UNS R 50700)	Withdrawn and transferred to materials	
125	ASTM F139–00, Standard Specification for Wrought 18 Chromium-14 Nickel-2.5 Molybdenum Stainless Steel Sheet and Strip for Surgical Implants (UNS S31673)	Withdrawn and transferred to materials	
127	ASTM F562–00, Standard Specification for Wrought Cobalt-35 Nickel-20 Chromium-10 Molybdenum Alloy for Surgical Implant Applications	Withdrawn and transferred to materials	
128	ASTM F688–00, Standard Specification for Wrought Cobalt-35 Nickel-2.5 Molybdenum Alloy Plate, Sheet, and Foil for Surgical Implants (UNS R30035)	Withdrawn and transferred to materials	
129	ASTM F745–00, Standard Specification for 18 Chromium-12.5 Nickel-2.5 Molybdenum Stainless Steel for Cast and Solution-Annealed Surgical Implant Applications	Withdrawn and transferred to materials	
130	ASTM F799–99, Standard Specification for Cobalt-28 Chromium-6 Molybdenum Alloy Forgings for Surgical Implants (UNS R31537, R31538, R31539)	Withdrawn and transferred to Materials	
132	ASTM F1088–87 (1992)e1, Standard Specification for Beta-Tricalcium Phosphate for Surgical Implantation	Withdrawn and transferred to materials	
133	ASTM F1108–97a, Standard Specification for Ti6A14V Alloy Castings for Surgical Implants (UNS R56406)	Withdrawn and transferred to materials	
134	ASTM F1295–01, Standard Specification for Wrought Titanium-6 Aluminum-7 Niobium Alloy for Surgical Implant Applications (UNS R56700)	Withdrawn and transferred to materials	
135	ASTM F1341–99, Standard Specification for Unalloyed Titanium Wire UNS R50250, UNS R50400, UNS R50500, UNS R50700, for Surgical Implant Applications	Withdrawn and transferred to materials	

Old Item No.	Standard	Change	Replacement Item No.
136	ASTM F1472–00, Standard Specification for Wrought Titanium-6 Aluminum-4 Vanadium Alloy (UNS R56400) for Surgical Implant Applications	Withdrawn and transferred to materials	
137	ASTM F1537–00, Standard Specification for Wrought Cobalt-28-Chromium-6-Molybdenum Alloy for Surgical Implants (UNS R31537, UNS R31538, and UNS R31539)	Withdrawn and transferred to materials	
138	ASTM F1541–01, Standard Specification and Test Methods for External Skeletal Fixation Devices	Withdrawn and replaced with newer version	158
139	F1580–95e1, Standard Specification for Titanium and Titanium-6% Aluminum-4% Vanadium Alloy Powders for Coatings of Surgical Implants	Withdrawn and transferred to materials	
144	ASTM F138–00, Standard Specification for Wrought 18 Chromium-14 Nickel-2.5 Molybdenum Stainless Bar and Wire for Surgical Implants (UNS S31673)	Withdrawn and transferred to materials	
146	ASTM F603–00, Standard Specification for High-Purity Dense Aluminum Oxide for Surgical Implant Application	Withdrawn and transferred to materials	
147	ASTM F620–00, Standard Specification for Alpha Beta Titanium Alloy Forgings for Surgical Implants	Withdrawn and transferred to materials	
148	ASTM F648–00, Standard Specification for Ultra-High-Molecular-Weight Polyethylene Powder and Fabricated Form for Surgical Implants	Withdrawn and transferred to materials	
149	ASTM F746–87 (1999), Standard Test Method for Pitting or Crevice Corrosion of Metallic Surgical Implant Materials	Withdrawn and transferred to materials	
151	ASTM F1091–91(2000), Standard Specification for Wrought Cobalt-20 Chromium-15 Tungsten-10 Nickel Alloy Surgical Fixation Wire (UNS R 30605)	Withdrawn and transferred to Materials	
154	ASTM F1350–01, Standard Specification for Wrought 18 Chromium-14 Nickel–2.5, Molybdenum Stainless Steel Surgical Fixation Wire (UNS S31673)	Withdrawn and transferred to materials	

I. Physical Medicine

Old Item No.	Standard	Change	Replacement Item No.
21	ISO 7176–6:2001, Wheelchairs—Part 6: Determination of Maximum Speed, Acceleration and Deceleration of Electric Wheelchairs	Withdrawn and replaced with newer version	29
22	ISO 7176–9:2001, Wheelchairs—Part 9: Climatic Tests for Electric Wheelchair	Withdrawn and replaced with newer version	30

J. Radiology

Old Item No.	Standard	Change	Replacement Item No.
9	NEMA NU 1–2001, Performance Measurements of Scintillation Cameras	Withdrawn and replaced with newer version	75
18	NEMA NU 2–2001, Performance Measurement of Positron Emission Tomographs	Withdrawn and replaced with newer version	76
46	AIUM RTD1—1998, Standard for Real-Time Display of Thermal and Mechanical Acoustic Output Indices on Diagnostic Ultrasound Equipment Revision 1	Title correction	46
61	UL 122–2001, Standard for Safety of Photographic Equipment—Fourth Edition	Title correction	61
62	UL 187–1998, Standard for Safety X-ray Equipment—Seventh Edition	Title correction	62
64	IEC 60601–2–45, Ed. 2.0, Medical Electrical Equipment: Part 2–45: Particular Requirement for the Safety of Mammographic X-ray Equipment and Mammographic Stereotactic Devices	Title correction	64
66	MUS (R 1999), Medical Ultrasound Safety	Title correction	66
67	NEMA MS–1–2001, Determination of Signal to Noise Ratio (SNR) in Diagnostic Magnetic Resonance Images	Withdrawn and replaced with newer version	77
70	NEMA PS 3.15 2000, Digital Imaging and Communication in Medicine (DICOM) Part 15: Security Profile	Withdrawn and replaced with newer version	78
73	UL–122 (R2001), Standard for Safety, Photographic Equipment	Withdrawn	

K. Sterility

Old Item No.	Standard	Change	Replacement Item No.
01	AOAC 6.2.01:1995, Official Method 955.24, Testing Disinfectants Against Salmonella choleraesuis, Use-Dilution Method	Product codes	01
02	AOAC 6.2.02:1995, Official Method 991.47, Testing Disinfectants Against Salmonella choleraesuis, Hard Surface Carrier Test Method	Product codes	02
03	AOAC 6.2.03:1995, Official Method 991.48, Testing Disinfectants Against Staphylococcus aureus, Hard Surface Carrier Test Method	Product codes	03
04	AOAC 6.2.04:1995, Official Method 955.15, Testing Disinfectants Against Staphylococcus aureus, Use-Dilution Method	Product codes	04

Old Item No.	Standard	Change	Replacement Item No.
05	AOAC 6.2.05:1995, Official Method 991.49, Testing Disinfectants Against Pseudomonas aeruginosa, Hard Surface Carrier Test Methods	Product codes and relevant guidance	05
06	AOAC 6.2.06:1995, Official Method 964.02, Testing Disinfectants Against Pseudomonas aeruginosa, Use-Dilution Method	Product codes and relevant guidance	06
07	AOAC 6.3.02:1995, Official Method 955.17, Fungicidal Activity of Disinfectants Using Trichophyton mentagrophytes	Product codes and relevant guidance	07
08	AOAC 6.3.05:1995, Official Method 966.04, Sporicidal Activity of Disinfectants	Product codes and relevant guidance	08
09	AOAC 6.3.06:1995, Official Method 965.12, Tuberculocidal Activity of Disinfectants	Product codes and relevant guidance	09
10	ANSI/AAMI ST8: 2001, Hospital Steam Sterilization	Withdrawn and replaced with newer version	71
11	ANSI/AAMI ST19:1994, Biological Indicators for Saturated Steam Sterilization	Withdrawn	
12	ANSI/AAMI ST21:1994, Biological Indicators for Ethylene Oxide Sterilization Processes in Health Care Facilities	Withdrawn	
14	AAMI/ANSI ST33:1992, Guidance for the Selection and Use of Reusable Rigid Sterilization Container Systems for Ethylene Oxide Sterilization and Steam Sterilization in Health Care Facilities	Devices affected	72
19	AAMI/ANSI ST46:1992, Good Hospital Practice Steam Sterilization and Sterility Assurance	Devices affected, correction to type of standard, and relevant guidance	73
22	ANSI/AAMI ST60:1996, Sterilization of Health Care Products—Chemical Indicators—Part 1: General Requirements	Extent of Recognition and relevant guidance	74
25	AAMI/ANSI/ISO 11135:1994, Medical Devices—Validation and Routine Control of Ethylene Oxide Sterilization	Relevant guidance	25
26	AAMI/ANSI/ISO 11137:1994, Sterilization of Health Care Products—Requirements for Validation and Routine Control-Radiation Sterilization and ISO 11137:1995 (AMENDMENT 1:2001)	Withdrawn and replaced with newer version, relevant guidance	75
37	AAMI/ANSI/ISO 10993–7:1995(R) 2001, Biological evaluation of medical devices—Part 7: Ethylene oxide sterilization residuals	Withdrawn and replaced with newer version, relevant guidance	76
38	ANSI/AAMI ST24:1999, Automatic General Purpose Ethylene Oxide Sterilizers and Ethylene Oxide Sterilant Sources Intended for Use in Health Care Facilities	Devices affected and type of standard	77
39	USP 25:2002, Biological Indicator for Dry-Heat Sterilization Paper Carrier	Withdrawn and replaced with newer version	78
40	USP 25:2002, Biological Indicator for Ethylene Oxide Sterilization, Paper Carrier	Withdrawn and replaced with newer version	79
41	USP 25:2002, Biological Indicator for Steam Sterilization, Paper Carrier	Withdrawn and replaced with newer version	80
42	USP 25:2002, <61> Microbial Limits Test	Withdrawn and replaced with newer version	81

Old Item No.	Standard	Change	Replacement Item No.
43	USP 25:2002, Sterility Test <71>	Withdrawn and replaced with newer version	82
44	USP 25:2002, <85>, Biological Tests and Assays, Bacterial Endotoxin Test (LAL)	Withdrawn and replaced with newer version	83
45	USP:2002 <151> Pyrogen Test (USP Rabbit Test)	Withdrawn and replaced with newer version	84
46	USP:2002 <1211> Sterilization and Sterility Assurance of Compendial Articles	Withdrawn and replaced with newer version	85
49	AAMI/ANSI ST41:1999, Ethylene Oxide Sterilization in Health Care Facilities: Safety and Effectiveness	Citations, product codes and relevant guidance	49
52	ANSI/AAMI ST59:1999, Sterilization of Health Care Products—Biological Indicators Part 1: General Requirements	Relevant guidance	52
53	AAMI/ANSI ST 66:1999, Sterilization of Health Care Products—Chemical Indicators—Part 2: Class 2 Indicators for Air Removal Test Sheets and Packs	Relevant guidance	53
65	ASTM F1980:2002, Standard Guide for Accelerated Aging of Sterile Medical Device Packages	Withdrawn and replaced with newer version	86
66	USP 25:2002, <161> Transfusion and Infusion Assemblies and Similar Medical Devices	Withdrawn and replaced with newer version	87

III. Listing of New Entries

FDA is adding new entries to the list of recognized standards as follows:

A. Biocompatibility

Item No.	Title of Standard	Reference No. and Date
65	Standard Practice for Testing for Alternative Pathway Complement Activation in Serum by Solid Materials	ASTM F2065–00
66	Standard Practice for Evaluation of Delayed Contact Hypersensitivity Using the Murine Local Lymph Node Assay (LLNA)	ASTM F2148–01
67	Standard Practice for Assessment of Hemolytic Properties of Materials	ASTM F756–00

B. Cardiovascular/Neurology

Item No.	Title of Standard	Reference No. and Date
45	Testing and Reporting Performance Results of Cardiac Rhythm and ST-Segment Measurement Algorithms	ANSI/AAMI EC57–98
46	Standard Test Method for Measuring Recoil of Balloon-Expandable Stents	ASTM F2079–00
47	Standard Guide for Characterization and Presentation of the Dimensional Attributes of Vascular Stents	ASTM F2081–02
48	Test Method for Conducting Cyclic Potentiodynamic Polarization Measurements to Determine the Corrosion Susceptibility of Small Implant Devices	ASTM F2129–01

C. Dental/Ear, Nose, and Throat (ENT)

Item No.	Title of Standard	Reference No. and Date
92	Dental Brazing Alloys	ANSI/ADA Specification No. 88:2000
93	Methods of Measurement of Compatibility Between Wireless Communication Devices and Hearing Aids	ANSI C63.19:2001

D. General Hospital/General Plastic Surgery

Item No.	Title of Standard	Reference No. and Date
93	Sterlie Water for Irrigation	USP 25
94	Heparin Lock Flush Solution	USP 25
95	Sodium Chloride Injection	USP 25
96	Standard Test Method for Evaluating the Bacterial Filtration Efficiency (BFE) of Medical Face Mask Materials, Using a Biological Aerosol of Staphylococcus aureus	ASTM F2101–01

E. In Vitro Devices

Item No.	Title of Standard	Reference No. and Date
62	Laboratory Automation: Systems Operational Requirements, Characteristics, and Information Elements; Approved Standard	NCCLS: AUTO04–A
63	Laboratory Automation: Electromechanical Interfaces; Approved Standard	NCCLS: AUTO05–A
64	Point-of-Care Connectivity; Approved Standard	NCCLS: POCT1–A

F. Materials

Item No.	Title of Standard	Reference No. and Date
09	Standard Specification for Wrought Cobalt-20 Nickel-20 Chromium-3.5 Molybdenum-3.5 Tungsten-5 Iron Alloy for Surgical Implant Applications (UNS R30563)	ASTM F563–00
37	Standard Specification for Wrought Titanium-12 Molybdenum-6 Zirconium-2 Iron Alloy for Surgical Implant (UNS R58120)	ASTM F1813–01
38	Standard Terminology for Nickel-Titanium Shape Memory Alloys	ASTM F2005–00
40	Standard Specification for Wrought Nickel-Titanium Shape Memory Alloys for Medical Devices and Surgical Implants	ASTM F2063–00
41	Standard Specification for Wrought Titanium-15 Molybdenum Alloy for Surgical Implant Applications (UNS R58150)	ASTM F2066–01
42	Standard Test Method for Evaluation of MR Image Artifacts from Passive Implants	ASTM F2119–01
43	Standard Specification for Wrought Titanium-3 Aluminum-2.5 Vanadium Alloy Seamless Tubing for Surgical Implant Applications (UNS R56320)	ASTM F2146–01

G. OB-GYN/Gastroenterology

Item No.	Title of Standard	Reference No. and Date
26	Natural Latex Rubber Condoms—Requirements and Test methods	ISO 4074:2000(E)
27	Standard Test Methods for Male Condoms Made from Synthetic Materials	ASTM D6324–99a

H. Ophthalmic

Item No.	Title of Standard	Reference No. and Date
30	Intraocular Lenses	ANSI Z80.7:2001

I. Radiology

Item No.	Title of Standard	Reference No. and Date
79	High Voltage X-ray Cables and Receptacles	NEMA XR 7–1995 (R2000)
80	Power Supply Guidelines for X-ray Machines	NEMA XR 9–1984 (R1994, R2000)
81	Mechanical Safety Standard for Power Driven Motions of Electromedical Equipment	NEMA XR 13–1990 (R1995, R2000)
82	Recommended Practices for Load Bearing Mechanical Assemblies Used in Diagnostic Imaging	NEMA XR 14–1990 (R1995, R2000)
83	Medical Electrical Equipment, Part 2–37: Particular Requirements for the Safety of Ultrasonic Medical Diagnostic and Monitoring Equipment	IEC 60601–2–37 (2001–07)
84	Consol. Ed. 1.2 (incl. am1+am2), Safety of Laser Products—Part 1: Equipment Classification, Requirements and User's Guide	IEC 60825–1 (2001–08)
85	Ed. 2.0, Medical Electrical Equipment—Part 2: Particular Requirements for the Safety of Diagnostic and Therapeutic Laser Equipment	IEC 60601–2–22 (1995–11)

J. Sterility

Item No.	Title of Standard	Reference No. and Date
88	Sterilization of Health Care Products—General Requirements for Characterization of a Sterilizing Agent and the Development, Validation, and Routine Control of a Sterilization Process for Medical Devices	ANSI/AAMI/ISO 14937:2000
89	Standard Test Method for Burst Testing of Flexible Package Seals Using Internal Air Pressurization Within Restraining Plates	ASTM F2054–00
90	Standard Test Methods for Pressure Decay Leak Test for Nonporous Flexible Packages With and Without Restraining Plates	ASTM F2095–01
91	Standard Test Method for Detecting Gross Leaks in Porous Medical Packaging by Internal Pressurization (Bubble Test)	ASTM F2096–1
92	Standard Guide for Design and Evaluation of Primary Packaging for Medical Products	ASTM F2097–01
93	Biological Indicator for Steam Sterilization—Self Contained	USP 25:2002

IV. Recommendation of Standards for Recognition by FDA

Any person may recommend consensus standards as candidates for recognition under section 514 of the act by submitting such recommendations, with reasons for the recommendation, to the contact person (see **FOR FURTHER INFORMATION CONTACT**). To be properly considered, such recommendations should contain, at a minimum, the following information: (1) Title of the standard, (2) any reference number and date, (3) name and address of the national or international standards development organization, (4) a proposed list of devices for which a declaration of conformity to this standard should routinely apply, and (5) a brief identification of the testing or performance or other characteristics of the device(s) that would be addressed by a declaration of conformity.

V. Electronic Access

In order to receive ''Guidance on the Recognition and Use of Consensus Standards'' via your fax machine, call the CDRH Facts-On-Demand system at 800–899–0381 or 301–827–0111 from a touch-tone telephone. Press 1 to enter the system. At the second voice prompt press 1 to order a document. Enter the document number 321 followed by the pound sign (#). Follow the remaining voice prompts to complete your request.

You may obtain a copy of ''Guidance on the Recognition and Use of Consensus Standards'' by using the Internet. CDRH maintains a site on the Internet for easy access to information including text, graphics, and files that you may download to a personal computer with access to the Internet. Updated on a regular basis, the CDRH home page includes this guidance as well as the current list of recognized standards and other standards related documents. After publication in the **Federal Register**, this notice announcing ''Modifications to the List of Recognized Standards, Recognition List Number: 007'' will be available on the CDRH home page. You may access the CDRH home page at *http://www.fda.gov/cdrh*. You may access ''Guidance on the Recognition and Use of Consensus Standards,'' and the searchable data base for ''FDA Recognized Consensus Standards,'' through hyperlinks at *http://www.fda.gov/cdrh/stdsprog.html*. This **Federal Register** notice of modifications in FDA's recognition of consensus standards will be available, upon publication, at *http://www.fda.gov/cdrh/fedregin.html*.

VI. Submission of Comments

You may, at any time, submit to the contact person (*see* **FOR FURTHER INFORMATION CONTACT**) written comments regarding this document. You should submit two copies of any comments, except that individuals may submit one copy. You must identify comments with the docket number found in brackets in the heading of this document. FDA will consider any comments received in determining whether to amend the current listing of ''Modifications to the List of Recognized Standards, Recognition List Number: 007.''

Dated: September 18, 2002.

Linda S. Kahan,

Deputy Director, Center for Devices and Radiological Health.

[FR Doc. 02–24954 Filed 10–1–02; 8:45 am]

BILLING CODE 4160–01–S

DEPARTMENT OF HEALTH AND HUMAN SERVICES

Food and Drug Administration

[Docket No. 02D–0389]

Draft Guidance for Industry on Nonclinical Studies for Development of Pharmaceutical Excipients; Availability

AGENCY: Food and Drug Administration, HHS.

ACTION: Notice.

SUMMARY: The Food and Drug Administration (FDA) is announcing the availability of a draft guidance for industry entitled ''Nonclinical Studies for Development of Pharmaceutical Excipients.'' The draft guidance document provides guidance concerning development of safety profiles to support use of new excipients as components of drug or biological products. It is intended for use by reviewers within both the Center for Drug Evaluation and Research (CDER) and the Center for Biologics Evaluation and Research (CBER) and by interested individuals in industry. The goals of this document are to foster and expedite the development of new excipients, communicate to industry current CDER and CBER thoughts pertaining to safety data needed to support excipient development, and increase uniformity within CDER and CBER on expectations for the nonclinical development of excipients.

DATES: Submit written or electronic comments on the draft guidance by December 31, 2002. General comments on agency guidance documents are welcome at any time.

ADDRESSES: Submit written requests for single copies of this draft guidance to the Division of Drug Information (HFD–240), Center for Drug Evaluation and Research, Food and Drug Administration, 5600 Fishers Lane, Rockville, MD 20857 Office of Communication, Training, and Manufacturers Assistance (HFM–40), Center for Biologics Evaluation and Research (CBER), Food and Drug Administration, 1401 Rockville Pike, Rockville, MD 20852–1448. Send one self-addressed adhesive label to assist the office in processing your requests. The document may also be obtained by mail by calling the CBER Voice Information System at 1–800–835–4709 or 301–827–1800, or by fax by calling the FAX Information System at 1–888–CBER-FAX or 301–827–3844. Send one self-addressed adhesive label to assist that office in processing your requests. Submit written comments on the guidance to the Dockets Management Branch (HFA–305), Food and Drug Administration, 5630 Fishers Lane, rm. 1061, Rockville, MD 20852. See the **SUPPLEMENTARY INFORMATION** section for electronic access to the guidance document.

FOR FURTHER INFORMATION CONTACT: Robert E. Osterberg, Center for Drug Evaluation and Research (HFD–024), Food and Drug Administration, 5600 Fishers Lane, Rockville, MD 20857, 301–594–5482, or Martin D. Green, Center for Biologics Evaluation and Research (HFM–579), Food and Drug Administration, 1401 Rockville Pike, Rockville, MD 20852–1448, 301–827–5349.

SUPPLEMENTARY INFORMATION:

I. Background

FDA is announcing the availability of a draft guidance for industry entitled ''Nonclinical Studies for Development of Pharmaceutical Excipients.'' Excipients are potential toxicants. It is important to perform risk-benefit assessments on excipients for use in drug products and to establish permissible limits for these compounds. These activities necessitate the availability of safety data. Consequently, there is a perception that development of new excipients is resource intensive. With proper planning, however, it is often possible to assess the toxicology of an excipient in a relatively efficient manner. Moreover, CDER and CBER recognize that existing human data for some excipients may substitute for nonclinical safety data, and use in previously approved products or GRAS status as a food additive will continue to receive consideration. This draft

guidance describes the nonclinical data that should be generated to support the safety of an inactive ingredient in the amounts administered if adequate, relevant prior human use cannot be documented.

This draft guidance is being issued consistent with FDA's good guidance practices regulation (21 CFR 10.115). The draft guidance, when finalized, will represent the agency's current thinking on nonclinical studies for development of pharmaceutical excipients. It does not create or confer any rights for or on any person and does not operate to bind FDA or the public. An alternative approach may be used if such approach satisfies the requirements of the applicable statutes and regulations.

II. Comments

Interested persons may submit written comments on the guidance to the Dockets Management Branch (address above). Two copies of any comments are to be submitted, except that individuals may submit one copy. Comments are to be identified with the docket number found in brackets in the heading of this document. The draft guidance and received comments are available for public examination in the Dockets Management Branch between 9 a.m. and 4 p.m., Monday through Friday.

III. Electronic Access

Persons with access to the Internet may obtain the document at http://www.fda.gov/cder/guidance/index.htm, http://www.fda.gov/cber/guidelines.htm, or http://www.fda.gov/ohrms/dockets/default.htm.

Dated: September 23, 2002.

Margaret M. Dotzel,

Associate Commissioner for Policy.

[FR Doc. 02–24985 Filed 10–1–02; 8:45 am]

BILLING CODE 4160–01–S

DEPARTMENT OF HEALTH AND HUMAN SERVICES

National Institutes of Health

National Institute of Environmental Health Sciences; Submission for OMB review; comment request; The Sister Study: Environmental and Genetic Risk Factors for Breast Cancer

SUMMARY: Under the provisions of section 3507(a)(1)(D) of the Paperwork Reduction Act of 1995, the National Institute of Environmental Health Sciences (NIEHS), the National Institutes of Health (NIH) has submitted to the Office of Management and Budget (OMB) a request for review and approval of the information collection listed below. This proposed information collection was previously published in the **Federal Register** on June 20, 2001, page 33103–4 and allowed 60-days for public comment. No public comments were received. The purpose of this notice is to allow an additional 30 days for public comment. The National Institutes of Health may not conduct or sponsor, and the respondent is not required to respond to, an information collection that has been extended, revised, or implemented on or after October 1, 1995, unless it displays a currently valid OMB number.

Proposed Collection

Title: The Sister Study: Environmental and Genetic Risk Factors for Breast Cancer. *Type of Information Collection Request:* New. *Need and Use of Information Collection:* We will study environmental and genetic risk factors for the development of breast cancer in a cohort of sisters of women who have had breast cancer. In the United States, approximately 192,000 new cases were diagnosed in 2001, accounting for 30% of all new cancer cases among women. The etiology of breast cancer in complex, with both genetic and environmental factors likely playing a role. Environmental risk factors, however, have been difficult to identify. Sisters of women with breast cancer have nearly twice the risk of developing breast cancer themselves. By focusing on a susceptible population, more precise estimates of the contribution of environmental and other non-genetic factors to disease risk may be possible.The increased risk of cancer, and the expected higher prevalence of both relevant genes and exposures (both shared with their sister who had breast cancer) will facilitate the study of gene-environment interactions. Once assembled, the cohort will be useful for studying other diseases in women. We will enroll a cohort of 50,000 women who have not had breast cancer over a 4-year period, with 37,500 enrolled during the first 3 years of the study. These breast cancer-free sisters will be followed annually for the development of breast cancer and other diseases. We expect 300 cases of breast cancer per year (on average) to develop in a cohort of 50,000 women. In addition, we will enroll and follow 1,500 of the index sisters (1125 during the first 3 years) whose breast cancer diagnosis was within four months prior to enrollment. These ''index'' cases will allow comparison of case-control pairs of sisters and prospective study of the impact of environmental exposures and genes on prognosis.

Frequency of Response: On occasion. For those who qualify and enroll: one initial 15-minute screening contact [telephone or internet, one 2-hour telephone interview, one mailed self-administered questionnaire (1.5 hours), biological and environmental specimen collection (1 hours), and annual follow-up questionnaires (0.5 hours). for those who don't enroll: one 15-minute screening contact (internet or phone). For women with breast cancer or who develop breast cancer during follow-up: validation of diagnosis through doctor's office. *Affected Pubic:* Individuals or households, doctor's office. *Types of Respondents:* Unaffected sisters of women diagnosed with breast cancer, aged 35–74, from all socioeconomic backgrounds and ethnicities and women with recently diagnosed breast cancer. The annual reporting burden in as follows: *Estimated Number of Respondents:* 151,800–50,000 study respondents per year, of whom 12,875 will qualify and enroll—including 12,500 unaffected women plus 500 index cases of incident breast cancer. (**Note:** Total cohort enrollment of 50,000 cancer-free sisters and 1,500 index cases of incident breast cancer will take 4 years to achieve, requiring an estimated 2000, 000 respondents in all.) In addition, there will be a total of 1,575 doctor office respondents to validate diagnoses. The first year cost per women who enrolls in the study is estimated to be $95 (based on 4.75 hours of $20 hourly wage). Cost equivalent per follow-up year for enrolled women is $10. Total cost to women who don't enroll is $5. Cost to doctor's offices is $10 (assuming $40 per hour). *Estimated Number of Responses per Respondent See* table below. *Average Burden Hours Per Response: See* table below. *Estimated Total Burden Hours Requested:* 231,240 over 3 years (see table). There are no Capital Costs to report. There are no Operating or Maintenance Costs to report.

BILLING CODE 4140–01–M

Type of Respondents	Estimated number of respondents – years 1-3	Estimated number of responses per respondent	Average burden hours per response	Estimated total burden hours requested
Women screened but ineligible or not willing to enroll (a)	111,375	1	0.25	27,843.75
Cancer-free sisters enrolled year 1 (b)	12,500	5	1.15	71,875.00
Cancer-free sisters enrolled year 2 (c)	12,500	4	1.3125	65,625.00
Cancer-free sisters enrolled year 3 (d)	12,500	3	1.58	59,375.00
Index breast cancer case enrolled year 1 (b)	375	5	1.15	2,156.25
Index breast cancer case enrolled year 2 (c)	375	4	1.3125	1,968.75
Index breast cancer case enrolled year 3 (d)	375	3	1.58	1,777.50
Women developing breast cancer during follow-up	225	1	1.00	225.00
Doctor's offices (validate index cases)	1,125	1	0.25	281.25
Doctor's offices (validate new cases and other diagnoses)	450	1	0.25	112.50
Total	151,800	------	------	231,240.00

(a) 150,000 contacts less 38,625 expected qualify and to enroll

(b) screener (0.25-hr), CATI (2-hr), self-administered (1.5-hr), specimen collection (1-hr), follow-up (2 @ 0.5-hr) = 5.75 hours total

(c) screener (0.25-hr), CATI (2-hr), self-administered (1.5-hr), specimen collection (1-hr), follow-up (@ 0.5-hr) = 5.25 hours total

(d) screener (0.25-hr), CATI (2-hr), self-administered (1.5-hr), specimen collection (1-hr),= 4.75 hours total

BILLING CODE 4140–01–C

Request for Comments

Written comments and/or suggestions from the public and affected agencies are invited on one or more of the following points: (1) Whether the proposed collection of information is necessary for the proper performance of the function of the agency, including whether the information will have practical utility; (2) the accuracy of the agency's estimate of the burden of the proposed collection of information, including the validity of the methodology and assumptions used; (3) ways to enhance the quality, utility, and clarity of the information to be collected; and (4) ways to minimize the burden of the collection of information on those who are to respond, including the use of appropriate automated, electronic, mechanical, or other technological collection techniques or other forms of information technology.

Direct Comments to OMB

Written comments and/or suggestions regarding the items(s) contained in this notice, especially regarding the estimated public burden and associated response time, should be directed to the: Office of Management and Budget, Office of Regulatory Affairs, New Executive Office Building, Room 10235, Washington, DC 20503, Attention: Desk Officer for NIH. To request more information on the proposed project or to obtain a copy of the data collection plans and instruments, contact: Dr. Dale Sandler, Acting Chief, Epidemiology Branch, NIEHS, Building 101, A–304, P.O. Box 122233, Research Triangle Park, NC 27709 or call non-toll-free number (919) 541–4668 or E-mail your request, including your address to: *sandler@niehs.nih.gov.*

Comments Due Date

Comments regarding this information collection are best assured of having their full effect if received within 30 days of the date of this publication.

Dated: September 3, 2002.

Francine Little,

NIEHS, Associate Director for Management.

[FR Doc. 02–24965 Filed 10–1–02; 8:45 am]

BILLING CODE 4140–01–M

DEPARTMENT OF HEALTH AND HUMAN SERVICES

National Institutes of Health

National Cancer Institute; Notice of Meeting

Pursuant to section 10(a) of the Federal Advisory Committee Act, as amended (5 U.S.C. Appendix 2), notice is hereby given of a meeting of the National Cancer Institute Director's Consumer Liaison Group.

The meeting will be open to the public, with attendance limited to space available. Individuals who plan to attend and need special assistance, such as sign language interpretation or other reasonable accommodations, should notify the Contact Person listed below in advance of the meeting.

Name of Committee: National Cancer Institute Director's Consumer Liaison Group.

Date: October 22, 2002.

Time: 2 p.m. to 4 p.m.

Agenda: To debrief on September 12, 2002 meeting with Dr. von Eschenbach and to get updates from the working group.

Place: 6116 Executive Blvd., Rockville, MD 20852, (Telephone Conference Call).

Contact Person: Elaine Lee, Executive Secretary, Office of Liaison Activities, National Institutes of Health, National Cancer Institute, 6116 Executive Boulevard, Suite 300 C, Bethesda, MD 20892, 301/594–3194.

Any member of the public interested in presenting oral comments to the committee may notify the Contact Person listed on this notice at least 10 days in advance of the meeting. Interested individuals and representatives of organizations may submit a letter of intent, a brief description of the organization represented, and a short description of the oral presentation. Only one representative of an organization may be allowed to present oral comments and if accepted by the committee, presentations may be limited to five minutes. Both printed and electronic copies are requested for the record. In addition, any interested person may file written comments with the committee by forwarding their statement to the Contact Person listed on this notice. The statement should include the name, address, telephone number and when applicable, the business or professional affiliation of the interested person.

Information is also available on the Institute's/Center's home page: *http://deainfo.nci.gov/advisory/dclg/dclg.htm,* where an agenda and any additional information for the meeting will be posted when available.

(Catalogue of Federal Domestic Assistance Program Nos. 93.392, Cancer Construction; 93.393, Cancer Cause and Prevention Research; 93.394, Cancer Detection and Diagnosis Research; 93.395, Cancer Treatment Research; 93.396, Cancer Biology Research; 93.397, Cancer Centers Support; 93.398, Cancer Research Manpower; 93.399, Cancer Control, National Institutes of Health, HHS)

Dated: September 24, 2002.

LaVerne Y. Stringfield,

Director, Office of Federal Advisory Committee Policy.

[FR Doc. 02–24970 Filed 10–1–02; 8:45 am]

BILLING CODE 4140–01–M

DEPARTMENT OF HEALTH AND HUMAN SERVICES

National Institutes of Health

National Institute of Dental & Craniofacial Research; Notice of Closed Meeting

Pursuant to section 10(d) of the Federal Advisory Committee Act, as amended (5 U.S.C. Appendix 2), notice is hereby given of the following meetings.

The meetings will be closed to the public in accordance with the provisions set forth in sections 552b(c)(4) and 552b(c)(6), Title 5 U.S.C., as amended. The grant applications and the discussions could disclose confidential trade secrets or commercial property such as patentable material, and personal information concerning individuals associated with the grant applications, the disclosure of which would constitute a clearly unwarranted invasion of personal privacy.

Name of Committee: National Institute of Dental and Craniofacial Research Special Emphasis Panel, 03–18, Review of R44 Grants.

Date: October 8, 2002.

Time: 11 a.m. to 1 p.m.

Agenda: To review and evaluate grant applications.

Place: 45 Center Drive, Bethesda, MD 20892. (Telephone Conference Call).

Contact Person: Philip Washko, PhD, DMD, Scientific Review Administrator, 45 Center Drive, Natcher Building, Rm. 4AN44F, National Institutes of Health, Bethesda, MD 20892. (301) 594–2372.

Name of Committee: National Institute of Dental and Craniofacial Research Special Emphasis Panel, 03–15, Review of R44 Grants.

Date: October 17, 2002.

Time: 10 a.m. to 12 p.m.

Agenda: To review and evaluate grant applications.

Place: 45 Center Drive, Natcher Building, Room 3AN12, Bethesda, MD 20892. (Telephone Conference Call).

Contact Person: Philip Washko, PhD, DMD, Scientific Review Administrator, 45 Center Drive, Natcher Building, Rm. 4AN44F, National Institutes of Health, Bethesda, MD 20892. (301) 594–2372.

Name of Committee: National Institute of Dental and Craniofacial Research Special Emphasis Panel, 03–03, Review of RFA DE–03–001.

Date: November 10–11, 2002.

Time: 8 a.m. to 6 p.m.

Agenda: To review and evaluate grant applications.

Place: Marriott Pooks Hill, 5151 Pooks Hill Road, Bethesda, MD 20814.

Contact Person: Yujing Liu, MD, PhD, Scientific Review Administrator, National Institute of Dental & Craniofacial Res., 45 Center Drive, Natcher Building, Rm. 4AN44F, Bethesda, MD 20892. (301) 594–2372.

Name of Committee: National Institute of Dental and Craniofacial Research Special Emphasis Panel, 03–22, Review of R42 Grants.

Date: November 15, 2002.

Time: 11 a.m. to 1 p.m.

Agenda: To review and evaluate grant applications.

Place: 45 Center Drive, Natcher Building, Room 3AN12, Bethesda, MD 20892. (Telephone Conference Call).

Contact Person: Philip Washko, PhD, DMD, Scientific Review Administrator, 45 Center Drive, Natcher Building, Rm. 4AN44F, National Institutes of Health, Bethesda, MD 20892. (301) 594–2372.

(Catalogue of Federal Domestic Assistance Program Nos. 93.121, Oral Diseases and Disorders Research, National Institutes of Health, HHS)

Dated: September 21, 2002.

LaVerne Y. Stringfield,

Director, Office of Federal Advisory Committee Policy.

[FR Doc. 02–24966 Filed 10–1–02; 8:45 am]

BILLING CODE 4140–01–M

DEPARTMENT OF HEALTH AND HUMAN SERVICES

National Institutes of Health

National Institute of Dental & Craniofacial Research; Notice of Closed Meeting

Pursuant to section 10(d) of the Federal Advisory Committee Act, as amended (5 U.S.C. Appendix 2), notice is hereby given of the following meeting.

The meeting will be closed to the public in accordance with the provisions set forth in sections 552b(c)(4) and 552b(c)(6), Title 5 U.S.C., as amended. The grant applications and the discussions could disclose confidential trade secrets or commercial property such as patentable material, and personal information concerning individuals associated with the grant applications, the disclosure of which would a clearly unwarranted invasion of personal privacy.

Name of Committee: NIDCR Special Grants Review Committee, 03–01, Review of R03s, Ks and T Grants.

Date: October 17–18, 2002.

Time: 8 a.m. to 4 p.m.

Agenda: To review and evaluate grant applications.

Place: Marriott Pooks Hill, 5151 Pooks Hill Road, Bethesda, MD 20814.

Contact Person: Lynn M. King, PhD, Scientific Review Administrator, Scientific Review Branch, 45 Center Dr., Rm 4AN–38K, National Institute of Dental & Craniofacial Research, National Institutes of Health, Bethesda, MD 20892–6402. 301–594–5006.

(Catalogue of Federal Domestic Assistance Program Nos. 93.121, Oral Diseases and Disorders Research, National Institutes of Health, HHS)

Dated: September 21, 2002.

LaVerne Y. Stringfield,

Director, Office of Federal Advisory Committee Policy.

[FR Doc. 02–24967 Filed 10–1–02; 8:45 am]

BILLING CODE 4140–01–M

DEPARTMENT OF HEALTH AND HUMAN SERVICES

National Institutes of Health

National Institute on Drug Abuse; Notice of Closed Meetings

Pursuant to section 10(d) of the Federal Advisory Committee Act, as amended (5 U.S.C. Appendix 2), notice is hereby given of the following meetings.

The meetings will be closed to the public in accordance with the provisions set forth in sections 552b(c)(4) and 552b(c)(6), Title 5 U.S.C., as amended. The grant applications and the discussions could disclose confidential trade secrets or commercial property such as patentable material, and personal information concerning individuals associated with the grant applications, the disclosure of which would constitute a clearly unwarranted invasion of personal privacy.

Name of Committee: National Institute on Drug Abuse and Initial Review Group Treatment Research Subcommittee.

Date: October 8–9, 2002.

Time: 9 a.m. to 5 p.m.

Agenda: To review and evaluate grant applications.

Place: Radisson Barcelo Hotel, 2121 P Street, NW., Washington, DC 20037.

Contact Person: Kesinee Nimit, MD, Health Scientist Administrator, Office of Extramural Affairs, National Institute on Drug Abuse, National Institutes of Health, DHHS, 6001 Executive Boulevard, Room 3158, MSC 9547, Bethesda, MD 20892–9547, (301) 435–1432.

Name of Committee: National Institute on Drug Abuse Initial Review Group Health Services Research Subcommittee.

Date: October 8–9, 2002.

Time: 9 a.m. to 5 p.m.

Agenda: To review and evaluate grant applications.

Place: Radisson Barcelo Hotel, 2121 P Street, NW., Washington, DC 20037.

Contact Person: Marina L. Volkov, PhD, Health Scientist Administrator, Office of Extramural Affairs, National Institute on Drug Abuse, National Institutes of Health, DHHS, 6001 Executive Boulevard, Room 3158, MSC 9547, Bethesda, MD 20892–9547, (301) 435–1433.

Name of Committee: National Institute on Drug Abuse Initial Review Group Medication Development Research Subcommittee.

Date: October 21–22, 2002.

Time: 8:30 a.m. to 6 p.m.

Agenda: To review and evaluate grant applications.

Place: Wyndham City Center Hotel, Dupont Room, 1143 New Hampshire Avenue, NW., Washington, DC 20037.

Contact Person: Khursheed Asghar, PhD, Chief, Basic Sciences Review Branch, Office of Extramural Affairs, National Institute on Drug Abuse, National Institutes of Health, 6001 Executive Boulevard, Room 3158, MSC 9547, Bethesda, MD 20892–9547, (301) 443–2620.

Name of Committee: National Institute on Drug Abuse Initial Review Group, Training and Career Development Subcommittee.

Date: November 12–14, 2002.

Time: 9 a.m. to 6 p.m.

Agenda: To review and evaluate grant applications.

Place: Hyatt Arlington, 1325 Wilson Boulevard, Arlington, VA 22209.

Contact Person: Mark Swieter, PhD, Health Scientist Administrator, Office of Extramural Affairs, National Institute on Drug Abuse, National Institutes of Health, DHHS, 6001 Executive Boulevard, Room 3158, MSC 9547, Bethesda, MD 20892–9547, (301) 435–1389.

Name of Committee: National Institute on Drug Abuse Special Emphasis Panel Centers Review Committee.

Date: November 18–19, 2002.

Time: 8:30 a.m. to 5 p.m.

Agenda: To review and evaluate grant applications.

Place: Ritz Carlton—Pentagon City, 1250 South Hayes Street, Arlington, VA 22202.

Contact Person: Rita Liu, PhD, Health Scientist Administrator, Office of Extramural Affairs, National Institute on Drug Abuse, National Institutes of Health, DHHS, 6001 Executive Boulevard, Room 3158, MSC 9547, Bethesda, MD 20892–9547, (301) 435–1388.

(Catalogue of Federal Domestic Assistance Program Nos. 93.277, Drug Abuse Scientist Development Award for Clinicians, Scientist Development Awards, and Research Scientist Awards; 93.278, Drug Abuse National Research Service Awards for Research Training; 93.279, Drug Abuse Research Programs, National Institutes of Health, HHS)

Dated: September 21, 2002.

LaVerne Y. Stringfield,

Director, Office of Federal Advisory Committee Policy.

[FR Doc. 02–24969 Filed 10–1–02; 8:45 am]

BILLING CODE 4140–01–M

DEPARTMENT OF HEALTH AND HUMAN SERVICES

National Institutes of Health

National Institute of Dental & Craniofacial Research; Notice of Closed Meetings

Pursuant to section 10(d) of the Federal Advisory Committee Act, as amended (5 U.S.C. Appendix 2), notice is hereby given of the following meetings.

The meetings will be closed to the public in accordance with the

provisions set forth in sections 552b(c)(4) and 552b(c)(6), Title 5 U.S.C., as amended. The grant applications and the discussions could disclose confidential trade secrets or commercial property such as patentable material, and personal information concerning individuals associated with the grant applications, the disclosure of which would constitute a clearly unwarranted invasion of personal privacy.

Name of Committee: National Institute of Dental and Craniofacial Research Special Emphasis Panel 03–04, Review of R01 Grants.

Date: October 15, 2002.

Time: 12 p.m. to 3 p.m.

Agenda: To review and evaluate grant applications.

Place: 45 Natcher Bldg, Rm 5As.25u, Bethesda, MD 20892, (Telephone Conference Call).

Contact Person: H. George Hausch, PhD, Acting Director, 4500 Center Drive, Natcher Building, Rm. 4AN44F, National Institutes of Health, Bethesda, MD 20892, (301) 594–2372.

Name of Committee: National Institute of Dental and Craniofacial Research Special Emphasis Panel 03–12, Review of R44 Grants.

Date: November 21, 2002.

Time: 11 a.m. to 1 p.m.

Agenda: To review and evaluate grant applications.

Place: 45 Center Drive, Bethesda, MD 20892, (Telephone Conference Call).

Contact Person: Philip Washko, PhD, DMD, Scientific Review Administrator, 45 Center Drive, Natcher Building, Rm. 4AN44F, National Institutes of Health, Bethesda, MD 20892, (301) 594–2372,

(Catalogue of Federal Domestic Assistance Program Nos. 93.121. Oral Diseases and Disorders Research, National Institutes of Health, HHS)

Dated: September 24, 2002.

LaVerne Y. Stringfield,

Director, Office of Federal Advisory Committee Policy.

[FR Doc. 02–24971 Filed 10–1–02; 8:45 am]

BILLING CODE 4140–01–M

DEPARTMENT OF HEALTH AND HUMAN SERVICES

National Institutes of Health

National Institutes of Allergy and Infectious Diseases; Notice of Closed Meetings

Pursuant to section 10(d) of the Federal Advisory Committee Act, as amended (5 U.S.C. Appendix 2), notice is hereby given of the following meetings.

The meetings will be closed to the public in accordance with the provisions set forth in sections 552b(c)(4) and 552b(c)(6), Title 5 U.S.C., as amended. The grant applications and discussions could disclose confidential trade secrets or commercial property such as patentable material, and personal information concerning individuals associated with the grant applications, the disclosure of which would constitute a clearly unwarranted invasion of personal privacy.

Name of Committee: National Institute of Allergy and Infectious Diseases Special Emphasis Panel, HIV Vaccine Research and Design Program.

Date: October 21, 2002.

Time: 8:30 a.m. to 5 p.m.

Agenda: To review and evaluate grant applications.

Place: Holiday Inn—Georgetown, 2101 Wisconsin Avenue, NW., Washington, DC 20007.

Contact Person: Hagit David, PhD, Scientific Review Administrator, Scientific Review Program, Division of Extramural Activities, NIAID, NIH, Room 2117, 6700–B Rockledge Drive, MSC 7610, Bethesda, MD 20892–7610, 301–496–2550, *hdavid@mercury.niaid.nih.gov.*

Name of Committee: National Institute of Allergy and Infectious Diseases Special Emphasis Panel, ''Integrated Pre-Clinical/Clinical AIDS Vaccine Development''.

Date: October 22, 2002.

Time: 8:30 a.m. to 5 p.m.

Agenda: To review and evaluate grant applications.

Place: Holiday Inn—Georgetown, 2101 Wisconsin Avenue, NW., Washington, DC 20007.

Contact Person: Hagit David, PhD, Scientific Review Administrator, Scientific Review Program, Division of Extramural Activities, NIAID, NIH, Room 2117, 6700–B Rockledge Drive, MSC 7610, Bethesda, MD 20892–7610, 301–496–2550, *hdavid@mercury.niaid.nih.gov.*

(Catalogue of Federal Domestic Assistance Progam Nos. 93.855, Allergy, Immunology, and Immunology, and Transplantation Research; 93.856, Microbiology and Infectious Diseases Research, National Institutes of Health, HHS)

Dated: September 25, 2002.

LaVerne Y. Stringfield,

Director, Office of Federal Advisory Committee Policy.

[FR Doc. 02–24972 Filed 10–1–02; 8:45 am]

BILLING CODE 4140–01–M

DEPARTMENT OF HEALTH AND HUMAN SERVICES

National Institutes of Health

National Institute of Dental & Craniofacial Research; Notice of Closed Meeting

Pursuant to section 10(d) of the Federal Advisory Committee Act, as amended (5 U.S.C. Appendix 2), notice is hereby given of the following meetings.

The meetings will be closed to the public in accordance with the provisions set forth in sections 552b(c)(4) and 552b(c)(6), Title 5 U.S.C., as amended. The grant applications and the discussions could disclose confidential trade secrets or commercial property such as patentable material, and personal information concerning individuals associated with the grant applications, the disclosure of which would constitute a clearly unwarranted invasion of personal privacy.

Name of Committee: National Institute of Dental and Craniofacial Research Special Emphasis Panel 03–17, Review of T14 Grants.

Date: October 9, 2002.

Time: 10 a.m. to 11:30 a.m.

Agenda: To review and evaluate grant applications.

Place: Natcher Building, Rm. 5AN55, Bethesda, MD 20892, (Telephone Conference Call).

Contact Person: H. George Hausch, PhD., Acting Director, 4500 Center Drive, Natcher building, Rm. 4AN44F, National Institutes of Health, Bethesda, MD 20892, (301) 594–2372.

This notice is being published less than 15 days prior to the meeting due to the timing limitations imposed by the review and funding cycle.

Name of Committee: National Institute of Dental and Craniofacial Research Special Emphasis Panel 03–23, Review of R01 Grants.

Date: October 28, 2002.

Time: 11 a.m. to 1 p.m.

Agenda: To review and evaluate grant applications.

Place: Natcher Building, Rm. 5AN55, Bethesda, MD 20892, (Telephone Conference Call).

Contact Person: H. George Hausch, PhD., Acting Director, 4500 Center Drive, Natcher Building, Rm. 4AN44F, National Institutes of Health, Bethesda, MD 20892, (301) 594–2372.

(Catalogue of Federal Domestic Assistance Program Nos. 93.121, Oral Diseases and Disorders Research, National Institutes of Health, HHS)

Dated: September 25, 2002.

LaVerne Y. Stringfield,

Director, Office of Federal Advisory Committee Policy.

[FR Doc. 02–24973 Filed 10–1–02; 8:45 am]

BILLING CODE 4140–01–M

DEPARTMENT OF HOUSING AND URBAN DEVELOPMENT

[Docket No. FR–4734–N–54]

Notice of Submission of Proposed Information Collection to OMB: Contractor's Requisition—Project Mortgages

AGENCY: Office of the Chief Information Officer, HUD.

ACTION: Notice

SUMMARY: The proposed information collection requirement described below has been submitted to the Office of Management and Budget (OMB) for review, as required by the Paperwork Reduction Act. The Department is soliciting public comments on the subject proposal.

DATES: *Comments Due Date:* November 1, 2002.

ADDRESSES: Interested persons are invited to submit comments regarding this proposal. Comments should refer to the proposal by name and/or OMB approval number (2502–0028) and should be sent to: Lauren Wittenberg, OMB Desk Officer, Office of Management and Budget, Room 10235, New Executive Office Building, Washington, DC 20503; Fax number (202) 395–6974; E-mail *Lauren_Wittenberg@omb.eop.gov.*

FOR FURTHER INFORMATION CONTACT: Wayne Eddins, Reports Management Officer, QDAM, Department of Housing and Urban Development, 451 Seventh Street, Southwest, Washington, DC 20410; e-mail *Wayne_Eddins@HUD.gov*; telephone (202) 708–2374. This is not a toll-free number. Copies of the proposed forms and other available documents submitted to OMB may be obtained from Mr. Eddins.

SUPPLEMENTARY INFORMATION: The Department has submitted the proposal for the collection of information, as described below, to OMB for review, as required by the Paperwork Reduction Act (44 U.S.C. chapter 35). The Notice lists the following information: (1) The title of the information collection proposal; (2) the office of the agency to collect the information; (3) the OMB approval number, if applicable; (4) the description of the need for the information and its proposed use; (5) the agency form number, if applicable; (6) what members of the public will be affected by the proposal; (7) how frequently information submissions will be required; (8) an estimate of the total number of hours needed to prepare the information submission including number of respondents, frequency of response, and hours of response; (9) whether the proposal is new, an extension, reinstatement, or revision of an information collection requirement; and (10) the name and telephone number of an agency official familiar with the proposal and of the OMB Desk Officer for the Department. This Notice also lists the following information:

Title of Proposal: Contractor's Requisition—Project Mortgages.

OMB Approval Number: 2502–0028.

Form Numbers: 92448.

Description of the Need for the Information and its Proposed Use: Contractors application for distribution of insured mortgage proceeds for construction costs. Multifamily Hub Centers ensure that work is actually completed satisfactorily. The prevailing wages certification ensures compliance with prevailing wage rate.

Respondents: Business or other for-profit, Not-for-profit institutions, Federal Government.

Frequency of Submission: On occasion.

	Number of respondents	Annual responses	×	Hours per response	=	Burden hours
Reporting Burden	1,000	12		6		72,000

Total Estimated Burden Hours: 72,000.

Status: Reinstatement, with change.

Authority: Section 3507 of the Paperwork Reduction Act of 1995, 44 U.S.C. 35, as amended.

Dated: September 24, 2002.

Wayne Eddins,

Departmental Reports Management Officer, Office of the Chief Information Officer.

[FR Doc. 02–24958 Filed 10–1–02; 8:45 am]

BILLING CODE 4210–72–M

DEPARTMENT OF HOUSING AND URBAN DEVELOPMENT

[Docket No. FR–4734–N–55]

Notice of Submission of Proposed Information Collection to OMB: Procedures for Appealing Section 8 Rent Adjustments

AGENCY: Office of the Chief Information Officer, HUD.

ACTION: Notice.

SUMMARY: The proposed information collection requirement described below has been submitted to the Office of Management and Budget (OMB) for review, as required by the Paperwork Reduction Act. The Department is soliciting public comments on the subject proposal.

DATES: *Comments Due Date:* November 1, 2002.

ADDRESSES: Interested persons are invited to submit comments regarding this proposal. Comments should refer to the proposal by name and/or OMB approval number (2502–0446) and should be sent to: Lauren Wittenberg, OMB Desk Officer, Office of Management and Budget, Room 10235, New Executive Office Building, Washington, DC 20503; Fax number (202) 395–6974; E-mail *Lauren_Wittenberg@omb.eop.gov.*

FOR FURTHER INFORMATION CONTACT: Wayne Eddins, Reports Management Officer, QDAM, Department of Housing and Urban Development, 451 Seventh Street, Southwest, Washington, DC 20410; e-mail *Wayne_Eddins@HUD.gov;* telephone (202) 708–2374. This is not a toll-free number. Copies of the proposed forms and other available documents submitted to OMB may be obtained from Mr. Eddins.

SUPPLEMENTARY INFORMATION: The Department has submitted the proposal for the collection of information, as described below, to OMB for review, as required by the Paperwork Reduction Act (44 U.S.C. chapter 35). The Notice lists the following information: (1) The title of the information collection proposal; (2) the office of the agency to collect the information; (3) the OMB approval number, if applicable; (4) the description of the need for the information and its proposed use; (5) the agency form number, if applicable; (6) what members of the public will be affected by the proposal; (7) how frequently information submissions will be required; (8) an estimate of the total number of hours needed to prepare the information submission including number of respondents, frequency of response, and hours of response; (9) whether the proposal is new, an extension, reinstatement, or revision of an information collection requirement; and (10) the name and telephone number of an agency official familiar with the proposal and of the OMB Desk Officer for the Department.

This Notice also lists the following information:

Title of Proposal: Procedures for Appealing Section 8 Rent Adjustments.

OMB Approval Number: 2502–0446.

Form Numbers: None.

Description of the Need for the Information and its Proposed Use: Multifamily project owners may appeal Section 8 rent adjustments determined

by HUD as required under Title II of the National Housing Act.

Respondents: Business or other for-profit, Not-for profit institutions, Federal Government.

Frequency of Submission: On occasion.

	Number of respondents	Annual responses	×	Hours per response	=	Burden hours
Reporting burden	1,250	1		2		2,500

Total Estimated Burden Hours: 2,500.

Status: Reinstatement, without change.

Authority: Section 3507 of the Paperwork Reduction Act of 1995, 44 U.S.C. 35, as amended.

Dated: September 24, 2002.

Wayne Eddins,

Departmental Reports Management Officer, Office of the Chief Information Officer.

[FR Doc. 02–24959 Filed 10–1–02; 8:45 am]

BILLING CODE 4210–72–M

DEPARTMENT OF HOUSING AND URBAN DEVELOPMENT

[Docket No. Fr–4730–N–40]

Federal Property Suitable as Facilities To Assist the Homeless

AGENCY: Office of the Assistant Secretary for Community Planning and Development, HUD.

ACTION: Notice

SUMMARY: This Notice identifies unutilized, underutilized, excess, and surplus Federal property reviewed by HUD for suitability for possible use to assist the homeless.

EFFECTIVE DATE: October 2, 2002.

FOR FURTHER INFORMATION CONTACT: Mark Johnston, Department of Housing and Urban Development, Room 7262, 451 Seventh Street SW, Washington, DC 20410; telephone (202) 708–1234; TTY number for the hearing- and speech-impaired (202) 708–2565, (these telephone numbers are not toll-free), or call the toll-free Title V information line at 1–800–927–7588.

SUPPLEMENTARY INFORMATION: In accordance with the December 12, 1988 court order in *National Coalition for the Homeless* v. *Veterans Administration,* No. 88–2503–OG (D.D.C.), HUD publishes a Notice, on a weekly basis, identifying unutilized, underutilized, excess and surplus Federal buildings and real property that HUD has reviewed for suitability for use to assist the homeless. Today's Notice is for the purpose of announcing that no additional properties have been determined suitable or unsuitable this week.

Dated: September 26, 2002.

John D. Garrity,

Director, Office of Special Needs Assistance Programs.

[FR Doc. 02–24960 Filed 10–1–02; 8:45 am]

BILLING CODE 4210–29–M

DEPARTMENT OF THE INTERIOR

Bureau of Indian Affairs

Notice of Intent To Prepare an Environmental Impact Statement for Construction of the Shepard Point Oil Spill Response Facility and Access Road in Cordova, AK

AGENCY: Bureau of Indian Affairs, Interior.

ACTION: Notice.

SUMMARY: This notice advises the public that the Bureau of Indian Affairs (BIA), in cooperation with the Federal Highway Administration and the Eyak Native Corporation, intends to prepare an Environmental Impact Statement (EIS) for the proposed Shepard Point Oil Spill Response Facility (Shepard Point Project) in Cordova, Alaska. The purpose of the project is to meet the need for a deep-port, emergency response docking and staging facility in the Prince William Sound region. Descriptions of the project area and of the proposed action are provided in the **SUPPLEMENTARY INFORMATION** section. This notice also announces a public scoping meeting for the content of the EIS.

DATES: Comments on the scope and content of the EIS must arrive by November 1, 2002. The public scoping meeting will be held on Thursday, October 17, 2002, at 7 p.m.

ADDRESSES: If you wish to comment, you may submit your comments by any one of several methods. You may mail written comments to the BIA Branch of Roads, Alaska, Project Code ''SPOSRF,'' P.O. Box 25520, Juneau, Alaska 99802, or hand deliver them to the BIA Regional Office, 709 West 9th, 3rd Floor, Federal Building, Juneau, Alaska. You may also comment via e-mail to *shepard_point@tribalnet.org*. Please avoid the use of special characters and any form of encryption in e-mail comments. If you do not receive confirmation from the system that your e-mail message was received, contact Ms. Kate Williams directly at (907) 424–7738. Four additional means to submit comments are by telefax to the BIA, at (907) 586–7142, by voice mail to the BIA, at (907) 586–7301, through the public scoping meeting or through a ''Public Comment'' feature on the Shepard Point Project Web site at *http://www.nativevillageofeyak.gov.*

The public scoping meeting will be held at the Masonic Temple, 400 1st Street, Cordova, Alaska.

FOR FURTHER INFORMATION CONTACT: Mr. Mark A. Boatwright, (907) 586–7301, or Ms. Kate Williams, (907) 424–7738.

SUPPLEMENTARY INFORMATION: On behalf of the Native Village of Eyak, in accordance with the Agreement and Consent Decree in the Exxon Valdez Case (Case No. A89–095 CI [consolidated] and Case No. A92–175 CI [Ex. A]) and as mandated by the State of Alaska in the 1993, Alyeska settlement (HB 165), the BIA proposes to design and build a deep-water port and oil spill response facility at Shepard Point. The purpose of the facility is to provide, in the event of an emergency, the capability for rapid deployment of oil spill recovery equipment that could be flown into Cordova and subsequently transported by ocean-going, deep draft vessels (defined as having a draft of 25 feet) to an oil spill site in Prince William Sound. To accomplish this, the proposed construction components must address the following:

1. A heavy-duty freight dock with the dock face having a bottom elevation of minus 35′ Mean Lower Level Water (MLLW); *e.g.*, required elevation at periods of low tides.
2. A staging area sufficient for storage of oil spill recovery equipment. This is proposed to be contiguous to the dock.
3. A clear channel to the Prince William Sound with a minimum elevation of minus 35′ MLLW.
4. Road access between the oil spill response dock and the Cordova Airport. As mandated, a new road segment would be constructed between Shepard Point and the existing road that serves the vicinity of the Orca Cannery.

The BIA will have primary responsibility for the planning, design,

environmental documentation and permit acquisition for the project. The BIA will also be responsible for any utility relocation, right-of-way acquisition, and construction of the deep-water port and the access road.

Alternatives to the proposed action include variations in project design and the no action alternative. Topics so far identified to be addressed in the EIS include air quality, geology, alterations of shoreline and channel floor, water resources and quality, terrestrial and aquatic habitats, flora and fauna (including effects on anadromous fish species), land use, historic properties, coastal management, economy, transportation, human health and safety (including spill prevention and response), visual environment, environmental justice and cumulative effects. These alternatives and topics may be elaborated, and others may be added through the scoping process.

Public Comment Availability

Comments, including names and addresses of respondents, will be available for public review at the mailing address shown in the **ADDRESSES** section, during regular business hours, 8 a.m. to 5 p.m., Monday through Friday, except holidays. Individual respondents may request confidentiality. If you wish us to withhold your name and/or address from public review or from disclosure under the Freedom of Information Act, you must state this prominently at the beginning of your written comment. Such requests will be honored to the extent allowed by law. We will not, however, consider anonymous comments. All submissions from organizations or businesses, and from individuals identifying themselves as representatives or officials of organizations or businesses will be made available for public inspection in their entirety.

Authority

This notice is published in accordance with Section 1503.1 of the Council on Environmental Quality Regulations (40 CFR Parts 1500 through 1508) implementing the procedural requirements of the National Environmental Policy Act of 1969, as amended (42 U.S.C. 4321 *et seq.*), the Transportation Equity Act Department for the 21st Century (Pub. L. 105–178), and the Department of the Interior Manual (516 DM 1–6), and is in the exercise of authority delegated to the Assistant Secretary—Indian Affairs by 209 DM 8.1.

Dated: September 13, 2002.

Neal A. McCaleb,

Assistant Secretary—Indian Affairs.

[FR Doc. 02–24982 Filed 10–1–02; 8:45 am]

BILLING CODE 4310–W7–P

DEPARTMENT OF THE INTERIOR

Bureau of Land Management

[AK–962–1410–HY–P; AA–6652–A, BBA–5]

Alaska Native Claims Selection

AGENCY: Bureau of Land Management, DOI.

ACTION: Notice of decision approving lands for conveyance.

SUMMARY: As required by 43 CFR 2650.7(d), notice is hereby given that an appealable decision approving lands for conveyance pursuant to the Alaska Native Claims Settlement Act will be issued to Far West, Inc., for lands in T. 45 S., R. 58 W., Seward Meridian, Alaska, located in the vicinitiy of Chignik, Alaska, containing approximately 2 acres. Notice of the decision will also be published four times in the *Anchorage Daily News.*

DATES: The time limits for filing an appeal are:

1. Any party claiming a property interest which is adversely affected by the decision, shall have until November 1, 2002 to file an appeal.

2. Parties receiving service by certified mail shall have until 30 days from the receipt to file an appeal.

Parties who do not file an appeal in accordance with the requirements of 43 CFR part 4, Subpart E, shall be deemed to have waived their rights.

ADDRESSES: Copies of the decision may be obtained from: Bureau of Land Management, Alaska State Office, 222 West Seventh Avenue, # 13, Anchorage, Alaska 99513–7599.

FOR FURTHER INFORMATION CONTACT: Chris Sitbon, (907) 271–3226.

Chris Sitbon,

Land Law Examiner, Branch of ANCSA Adjudication.

[FR Doc. 02–25034 Filed 10–1–02; 8:45 am]

BILLING CODE 4310–$$–P

DEPARTMENT OF THE INTERIOR

Bureau of Land Management

[CA–360–1430–EU; CACA–43966]

Notice of Realty Action, Noncompetitive Sale of Public Land in Shasta County, CA

AGENCY: Bureau of Land Management, Department of the Interior.

ACTION: Notice of segregation and sale of public land.

SUMMARY: The below described public land has been found suitable for direct sale under section 203 and 209 of the Federal Land Policy and Management Act of 1976 (90 Stat. 2750, 43 U.S.C. 1713), at not less than the estimated fair market value of $31,750. The land will not be offered for sale until at least 45 days after the date of this notice.

DATES: Submit comments on or before November 18, 2002.

FOR FURTHER INFORMATION CONTACT: Michael Truden, Redding Field Office, 355 Hemsted Drive, Redding, CA, 96002; 530–224–2100.

SUPPLEMENTARY INFORMATION: The following public land has been found suitable for direct sale under section 203 and 209 of the Federal Land Policy and Management Act of 1976 (90 Stat. 2750, 43 U.S.C. 1713), at not less than the estimated fair market value of $31,750. The land will not be offered for sale until at least 45 days after the date of this notice.

Mount Diablo Meridian

T. 33 N., R.5 W., Shasta County, California
Section 33: lot 18, N½ of lot 19, N½ of lot 20.

The land described contains 63.50 acres.

The land described is hereby segregated from appropriation under the public land laws, including the mining laws, pending disposition of this action or 270 days from the date of publication of this notice, whichever occurs first.

This land is being offered by direct sale to the Redding Gun Club, consistent with 43 CFR 2711.3–3(a)(1). It has been determined that the parcel contains no mineral values; therefore, mineral interests may be conveyed simultaneously.

The lands are not needed for Federal purposes. Conveyance is consistent with current BLM land use planning and would be in the public interest. The patent, when issued, will contain certain reservations to the United States and will be subject to all existing rights. Detailed information concerning these reservations as well as specific conditions of the sale are available for review at the Redding Field Office, Bureau of Land Management, 355 Hemsted Drive, Redding, California 96002.

For a period of 45 days from the date of publication of this notice in the **Federal Register**, interested persons may submit written comments regarding the proposed sale to Charles M. Schultz, Field Office Manager, Redding Field Office, Bureau of Land Management,

355 Hemsted Dr., Redding, CA 96002. In the absence of timely objections, this proposal shall become the final determination of the Department of the Interior.

Dated: August 6, 2002.

Charles M. Schultz,

Field Manager.

[FR Doc. 02–25035 Filed 10–1–02; 8:45 am]

BILLING CODE 4310–40–P

DEPARTMENT OF THE INTERIOR

Bureau of Land Management

[NV–930–1430–ET; N–75850]

Notice of Proposed Withdrawal and Opportunity for Public Meeting; Nevada

AGENCY: Bureau of Land Management, Interior.

ACTION: Notice.

SUMMARY: The Bureau of Land Management proposes to withdraw 15 acres of public land for a period of 20 years to protect an interagency fire station site. This notice closes the land for up to 2 years from surface entry and mining while various studies and analyses are made to make a final decision on the withdrawal application.

DATES: Comments and requests for meeting should be received on or before December 31, 2002.

ADDRESSES: Comments and meeting requests should be sent to the Nevada State Director, BLM, 1340 Financial Blvd., P.O. Box 12000, Reno, Nevada 89520–0006.

FOR FURTHER INFORMATION CONTACT: Dennis J. Samuelson, BLM Nevada State Office, 775–861–6532.

SUPPLEMENTARY INFORMATION: On September 13, 2002, a petition was approved allowing the Bureau of Land Management to file an application to withdraw the following described public land from settlement, sale, location, or entry under the general land laws, including the mining laws, but not the mineral leasing laws, subject to valid existing rights:

Mount Diablo Meridian

T. 21 S., R. 54 E.,
Sec. 2, W½SW¼ of lot 3 and SE¼ of lot 4.

The area described contains 15 acres in Clark County.

The purpose of the proposed withdrawal is to protect a Bureau of Land Management interagency fire station site near Pahrump, Nevada.

For a period of 90 days from the date of publication of this notice, all persons who wish to submit comments, suggestions, or objections in connection with the proposed withdrawal may present their views in writing to the Nevada State Director of the Bureau of Land Management.

Notice is hereby given that an opportunity for a public meeting is afforded in connection with the proposed withdrawal. All interested persons who desire a public meeting for the purpose of being heard on the proposed withdrawal must submit a written request to the Nevada State Director within 90 days from the date of publication of this notice. Upon determination by the authorized officer that a public meeting will be held, a notice of the time and place will be published in the **Federal Register** at least 30 days before the scheduled date of the meeting.

The application will be processed in accordance with the regulations set forth in 43 CFR part 2300.

For a period of 2 years from the date of publication of this notice in the **Federal Register**, the land will be segregated as specified above unless the application is denied or canceled or the withdrawal is approved prior to that date. Other uses which will be permitted during this segregative period are rights-of-way, leases, and permits.

Dated: September 18, 2002.

Jim Stobaugh,

Lands Team Lead.

[FR Doc. 02–25032 Filed 10–1–02; 8:45 am]

BILLING CODE 4310–HC–P

DEPARTMENT OF THE INTERIOR

Bureau of Land Management

[NV–930–1430–ET; N–75849]

Notice of Proposed Withdrawal and Opportunity for Public Meeting; Nevada

AGENCY: Bureau of Land Management, Interior.

ACTION: Notice.

SUMMARY: The Bureau of Land Management proposes to withdraw 10 acres of public land for a period of 20 years to protect an interagency fire station site. This notice closes the land for up to 2 years from surface entry and mining while various studies and analyses are made to make a final decision on the withdrawal application.

DATES: Comments and requests for meeting should be received on or before December 31, 2002.

ADDRESSES: Comments and meeting requests should be sent to the Nevada State Director, BLM, 1340 Financial Blvd., PO Box 12000, Reno, Nevada 89520–0006.

FOR FURTHER INFORMATION CONTACT: Dennis J. Samuelson, BLM Nevada State Office, 775–861–6532.

SUPPLEMENTARY INFORMATION: On September 13, 2002, a petition was approved allowing the Bureau of Land Management to file an application to withdraw the following described public land from settlement, sale, location, or entry under the general land laws, including the mining laws, but not the mineral leasing laws, subject to valid existing rights:

Mount Diablo Meridian

T. 14 S., R. 67 E.,
Sec. 32, W½NW¼NE¼SW¼ and E½NE¼NW¼SW¼

The area described contains 10 acres in Clark County.

The purpose of the proposed withdrawal is to protect a Bureau of Land Management interagency fire station site near Logandale, Nevada.

For a period of 90 days from the date of publication of this notice, all persons who wish to submit comments, suggestions, or objections in connection with the proposed withdrawal may present their views in writing to the Nevada State Director of the Bureau of Land Management.

Notice is hereby given that an opportunity for a public meeting is afforded in connection with the proposed withdrawal. All interested persons who desire a public meeting for the purpose of being heard on the proposed withdrawal must submit a written request to the Nevada State Director within 90 days from the date of publication of this notice. Upon determination by the authorized officer that a public meeting will be held, a notice of the time and place will be published in the **Federal Register** at least 30 days before the scheduled date of the meeting.

The application will be processed in accordance with the regulations set forth in 43 CFR part 2300.

For a period of 2 years from the date of publication of this notice in the **Federal Register**, the land will be segregated as specified above unless the application is denied or canceled or the withdrawal is approved prior to that date. Other uses which will be permitted during this segregative period are rights-of-way, leases, and permits.

Dated: September 18, 2002.

Jim Stobaugh,

Lands Team Lead.

[FR Doc. 02–25033 Filed 10–1–02; 8:45 am]

BILLING CODE 4310–HC–P

DEPARTMENT OF THE INTERIOR

Bureau of Land Management

[UT–050–1430–ET; UTU 50514]

Notice of Proposed Withdrawal Extension and Opportunity for Public Meeting; Utah

AGENCY: Bureau of Land Management, Interior.

ACTION: Notice.

SUMMARY: The Bureau of Land Management, has filed an application to extend Public Land Order No. 6543 for a 20-year period. This order withdrew public land from settlement, sale, location or entry under the general land laws, including the mining laws, to protect the Henry Mountain Administrative Site.

DATES: Comments and requests for a public meeting must be received by December 31, 2002.

ADDRESSES: Comments and meeting requests should be sent to the Field Office Manager, Richfield Field Office, 150 East 900 North, Richfield, Utah 84701.

FOR FURTHER INFORMATION CONTACT: Kay Erickson, Realty Specialist, Richfield Field Office, 150 East 900 North, Richfield, Utah 84701; 435–896–1515.

SUPPLEMENTARY INFORMATION: The Bureau of Land Management proposes to extend Public Land Order No. 6543 for an additional 20-year period. Public Land Order No. 6543, which expires on June 6, 2004, withdrew 41.21 acres from settlement, sale, location or entry under the general land laws, including the mining laws to protect the Bureau of Land Management's Henry Mountain Administrative Site.

All persons who wish to submit comments, suggestions, or objections in connection with the proposed withdrawal extension may present their views in writing, by the date specified above, to the Field Office Manager, Richfield Field Office, 150 East 900 North, Richfield, Utah 84701.

Notice is hereby given that an opportunity for a public meeting is afforded in connection with the proposed withdrawal extension. All interested persons who desire a public meeting for the purpose of being heard on the proposed withdrawal extension must submit a written request, by the date specified above, to the Field Office Manager, Richfield Field Office, 150 East 900 North, Richfield, Utah 84701. Upon determination by the authorized officer that a public meeting will be held, a notice of the time and place will be published in the **Federal Register** and a newspaper at least 30 days before the scheduled date of the meeting.

The application will be processed in accordance with the regulations set forth in 43 CFR 2300.

Dated: September 18, 2002.

Kent Hoffman,

Deputy State Director, Division of Lands and Minerals.

[FR Doc. 02–25048 Filed 10–1–02; 8:45 am]

BILLING CODE 4310–$$–M

DEPARTMENT OF THE INTERIOR

Minerals Management Service

Environmental Documents Prepared for Proposed Oil and Gas Operations on the Gulf of Mexico Outer Continental Shelf (OCS)

AGENCY: Minerals Management Service, Interior.

ACTION: Notice of the availability of environmental documents. Prepared for OCS mineral proposals on the Gulf of Mexico OCS.

SUMMARY: Minerals Management Service (MMS), in accordance with Federal Regulations that implement the National Environmental Policy Act (NEPA), announces the availability of NEPA-related Site-Specific Environmental Assessments (SEA) and Findings of No Significant Impact (FONSI), prepared by MMS for the following oil and gas activities proposed on the Gulf of Mexico OCS.

FOR FURTHER INFORMATION CONTACT: Public Information Unit, Information Services Section at the number below. Minerals Management Service, Gulf of Mexico OCS Region, Attention: Public Information Office (MS 5034), 1201 Elmwood Park Boulevard, Room 114, New Orleans, Louisiana 70123–2394, or by calling 1–800–200–GULF.

SUPPLEMENTARY INFORMATION: MMS prepares SEAs and FONSIs for proposals that relate to exploration for and the development/production of oil and gas resources on the Gulf of Mexico OCS. These SEAs examine the potential environmental effects of activities described in the proposals and present MMS conclusions regarding the significance of those effects. Environmental Assessments are used as a basis for determining whether or not approval of the proposals constitutes major Federal actions that significantly affect the quality of the human environment in the sense of NEPA Section 102(2)(C). A FONSI is prepared in those instances where MMS finds that approval will not result in significant effects on the quality of the human environment. The FONSI briefly presents the basis for that finding and includes a summary or copy of the SEA.

This notice constitutes the public notice of availability of environmental documents required under the NEPA Regulations.

This listing includes all proposals for which the Gulf of Mexico OCS Region prepared a FONSI in the period subsequent to publication of the preceding notice dated August 13, 2002.

Activity/operator	Location	Date
Exxon Mobil Production Company Lease-Term Pipeline Activity, SEA No. P–13684.	Mobile Area, Blocks 822 and 823, Leases OCS–G 05056 and 05057, located 4 miles south of Mobile County, Alabama.	07/17/02
LLOG Exploration Offshore, Inc., Initial Exploration Plan Activity, SEA No. N–7384.	High Island Area, (East Addition, South Extension), A–367, Lease OCS–G 23222, located 116 miles from the nearest Texas shoreline, and 126 miles from the onshore support base in Cameron, Louisiana.	08/07/02
Grand Isle Pipeline, Right-of-Way Activity, SEA No. P–13518	West Delta Area through Blocks 20, 21, 22, 23, 24, 27 and 28, Right-of Way Grant No. G 23065, originating from onshore pump station Pipeline facility near Venice, Louisiana, and terminating at the southwest end of Grand Terre Island, Louisiana.	08/09/02
Freeport McMoRan Sulfur, LLC, Programmatic EA, Inject OCS-Generated Resource Conservation and Recovery Act Exempt Exploration and Production Waste into Salt Caverns and Caprock.	Main Pass Area, Block 299, Lease OCS–G 09372, located 16 miles from shore, east of the Mississippi River Delta and Plaquemines Parish, Louisiana.	09/17/02

Activity/operator	Location	Date
Chevron U.S.A., Inc., Structure Removal Activity, SEA No. ES/SR 02–060.	Viosca Knoll Area, Block 252, Lease OCS–G 13982, located 30 miles south of Mobile County, Alabama, and 49 miles southeast of Pascagoula, Mississippi.	07/17/02
Amerada Hess Corporation, Structure Removal Activity, SEA Nos. ES/SR 02–070, 02–071, 02–072, 02–073, 02–074, 02–075, 02–076, 02–077, 02–078 and 02–079.	Vermilion Area, Block 58, Lease OCS–G 03546, located 16 miles south of Vermilion Parish, Louisiana, and 60 miles east-southeast of Cameron, Louisiana.	07/16/02
TotalFinaElf Exploration and Production USA, Inc., Structure Removal Activity, SEA No. ES/SR 02–080.	Eugene Island Area (South Addition), Block 275, Lease OCS–G 00988, located 56 miles south-southwest of Terrebonne Parish, Louisiana, and 90 miles southwest of Fourchon, Louisiana.	07/19/02
Walter Oil and Gas Corporation, Structure Removal Activity, SEA No. ES/SR 02–081.	Brazos Area, Block 550, Lease OCS–G 17693 (ROW), located 25 miles south-southeast of Matagorda County, Texas, and 55 miles south-southwest of Freeport, Texas.	07/18/02
Fairways Specialty Sales & Service, Inc., Structure Removal Activity, SEA No. ES/SR 02–082.	Matagorda Island Area, Block 682, OCS–G 05171, located 24 miles southeast of Calhoun County, Texas, and 92 miles southwest of Freeport, Texas.	07/22/02
Kerr-McGee Oil and Gas Corporation, Structure Removal Activity, SEA No. ES/SR 02–083.	High Island Area (South Addition) Block A576, Lease OCS–G 14194, located 100 miles south-southeast of Brazoria County, Texas, and 125 miles south of Sabine Pass, Texas.	07/31/02
Energy Resource Technology, Inc., Structure Removal Activity, SEA No. ES/SR 02–084.	Eugene Island Area, Block 128A, Lease OCS 00442, located 28 miles southeast of Terrebonne Parish, Louisiana, and 58 miles southeast of Morgan City, Louisiana.	07/31/02
Pioneer Natural Resources, Structure Removal Activity, SEA No. ES/SR 02–NG2.	West Delta Area, Block 62, Lease OCS–G 03601, located 12 miles northwest of Plaquemines Parish, Louisiana, and 163 miles southeast of Intracoastal City, Louisiana.	07/31/02
Ocean Energy, Inc., Structure Removal Activity, SEA No. ES/SR 02–085.	Vermilion Area, Block 71, Lease OCS–G 14396, located 22 miles south of Vermilion Parish, Louisiana, and 33 miles south of Intracoastal City, Louisiana.	08/05/02
El Paso Production, Structure Removal Activity, SEA No. ES/SR 02–086.	South Timbalier Area, Block 46, Lease OCS–G 16415, located 11 miles south-southeast of LaFourche Parish, Louisiana, and 195 miles east-southeast of Cameron, Louisiana.	08/06/02
Burlington Resources Offshore, Inc., Structure Removal Activity, SEA No. ES/SR 02–087.	Vermilion Area, Block 226, Lease OCS–G 05195, located 60 miles south of Vermilion Parish, Louisiana, and 95 miles southeast of Cameron, Louisiana.	08/09/02
Freeport McMoRan Sulphur, LLC Structure Removal Activity, SEA No. ES/SR 02–088.	Main Pass Area (South and East Addition), Block 299, Lease OCS–G 09372, located 15 miles east-northeast of Plaquemines Parish, Louisiana, and 118 miles east of Houma, Louisiana.	08/09/02
Freeport-McMoRan Sulphur, LLC, Structure Removal Activity, SEA Nos. ES/SR 02–091, 02–092, 02–093, 02–094, 02–095, 02–096 and 02–097.	Main Pass Area, Block 299, Lease OCS–G 09372, located 14 miles east-northeast of Plaquemines Parish, Louisiana, and 119 miles east-southeast of Houma, Louisiana.	08/19/02
Walter Oil & Gas Structure Removal Activity, SEA No. ES/SR 02–098.	Galveston Area (South Addition), Block Corporation, A218, Lease OCS–G 14152, located 78 miles southeast of Brazoria County, Texas, and 92 miles south of Galveston, Texas.	08/22/02
Energy Resource Technology, Inc., Structure Removal Activity, SEA No. ES/SR 02–099.	West Cameron Area, Block 204, Lease OCS–G 15066, located 33 miles south-southwest of Cameron Parish, Louisiana, and 35 miles south of Cameron, Louisiana.	08/20/02
W & T Offshore, Inc., Structure Removal Activity, SEA Nos. ES/SR 02–100 and 02–101.	South Timbalier Area, Block 145, Lease OCS–G 14528, located 33 miles south-southwest of Terrebonne Parish, Louisiana, and 41 miles southwest of Fourchon, Louisiana.	08/28/02
Kerr-McGee Oil & Gas Corporation, Structure Removal Activity, SEA No. ES/SR 02–102.	East Cameron Area (South Addition), Block 338, Lease OCS–G 02063, located 103 miles south of Cameron Parish, Louisiana, and 128 miles southeast of Sabine Pass, Texas.	08/22/02
Chevron U.S.A., Inc., Structure Removal Activity, SEA Nos. ES/SR 02–103, 02–104 and 02–105.	South Marsh Island Area (North Addition), Block 218, Lease OCS 00310, located 9 miles southwest of Iberia Parish, Louisiana, and 24 miles south-southeast of Intracoastal City, Louisiana.	08/28/02
Taylor Energy Company, Structure Removal Activity, SEA Nos. ES/SR 02–106, 02–107 and 02–108.	Matagorda Island Area, Block 665, Lease OCS–G03464, and South Marsh Island Area, Block 29, Lease OCS–G 01189, located 13 miles southeast of Calhoun County, Texas, and 32 miles east of Aransas Pass, Texas; located 43 miles southwest of Iberia Parish, Louisiana, and 65 miles south of Intracoastal City, Louisiana.	08/29/02
BP America, Structure Removal Activity, SEA Nos. ES/SR 02–109, 02–110, 91–115A and 02–111.	Ship Shoal Area, Block 84, Lease OCS–G 03160, Inc., West Cameron Area, Block 00065, Lease OCS–G 02825, located 13 miles southwest of Terrebone Parish, Louisiana, and 86 miles southeast of Intracoastal City, Louisiana; and 9 miles south of Cameron Parish, Louisiana, and 15 miles southeast of Cameron, Louisiana respectively.	08/28/02
The William G. Helis Company, LLC, Structure Removal Activity, SEA No. ES/SR 02–112.	Galveston Area, Block 394, Lease OCS–G 13317, located 21 miles southeast of Brazoria County, Texas, and 56 miles southwest of Galveston, Texas.	8/30/02

Activity/operator	Location	Date
El Paso Production, Structure Removal Activity, SEA No. ES/SR 02–113.	West Cameron (South Addition) Area, Block 498, Lease OCS–G 03520, located 90 miles southwest of Cameron Parish, Louisiana, and 92 miles south of Cameron, Louisiana.	09/06/02

Persons interested in reviewing environmental documents for the proposals listed above or obtaining information about SEAs and FONSIs prepared for activities on the Gulf of Mexico OCS are encouraged to contact MMS at the address or telephone listed in the **FOR FURTHER INFORMATION** section.

Dated: September 19, 2002.

Chris C. Oynes,

Regional Director, Gulf of Mexico OCS Region.

[FR Doc. 02–24981 Filed 10–1–02; 8:45 am]

BILLING CODE 4310–MR–P

INTERNATIONAL TRADE COMMISSION

Information Quality Guidelines

AGENCY: International Trade Commission.

ACTION: Notice.

SUMMARY: The United States International Trade Commission (Commission) announces the posting of its final Information Quality Guidelines (Guidelines) on the Commission's website.

EFFECTIVE DATE: As indicated in more detail in the Guidelines, the Guidelines are effective as of October 1, 2002.

FOR FURTHER INFORMATION CONTACT: Stephen A. McLaughlin, Acting Chief Information Officer, telephone 202–205–3131. Hearing-impaired individuals are advised that information on this matter may be obtained by contacting the Commission's TDD terminal on 202–205–3105. Persons with mobility impairments who will need special assistance in gaining access to the Commission should contact the Office of the Secretary at 202–205–2000.

SUPPLEMENTARY INFORMATION: Section 515 of the Treasury and General Government Appropriations Act for FY 2001 (Pub. L. 106–554) directed the Office of Management and Budget (OMB) to issue government-wide guidelines providing guidance to Federal agencies for ensuring and maximizing the quality, objectivity, utility, and integrity of information, including statistical information, disseminated by Federal agencies. OMB then published ''Guidelines for Ensuring and Maximizing the Quality, Objectivity, Utility, and Integrity of Information Disseminated by Federal Agencies'' on September 28, 2001 (66 FR 49718), as updated on January 3, 2002 (67 FR 369), and corrected on February 22, 2002 (67 FR 8452) (OMB's Government-Wide Guidelines). In compliance with section 515 and OMB's Government-Wide Guidelines, each Federal agency is required to publish guidelines for ensuring and maximizing the quality, objectivity, utility, and integrity of the information it disseminates. The Commission posted draft Guidelines on the Commission's Web site (*www.usitc.gov*), published draft Guidelines on June 3, 2002 (67 FR 38293), and sought public comments. Taking into consideration these comments, as well as guidance from OMB, the Commission revised its Guidelines. The Commission now announces the publication of its final Guidelines on its Web site. The Commission's Guidelines describe the agency's procedures for ensuring the quality (including objectivity, utility, and integrity) of information that it disseminates, the procedures by which an affected person may obtain correction of information disseminated by the Commission that does not comply with OMB's Government-Wide Guidelines and the Commission's Guidelines, and the procedures for periodic reporting to OMB.

Issued: September 27, 2002.

By order of the Commission.

Marilyn R. Abbott,

Secretary to the Commission.

[FR Doc. 02–25114 Filed 10–1–02; 8:45 am]

BILLING CODE 7020–02–P

DEPARTMENT OF JUSTICE

Office of Community Oriented Policing Services (COPS); Agency Information Collection Activities: Proposed Collection; Comments Requested

ACTION: 60-Day Notice of Information Collection Under Review: New Collection: Methamphetamine Project, Final Update Report (FUR).

The Department of Justice (DOJ), Office of Community Oriented Policing Services (COPS) has submitted the following information collection request to the Office of Management and Budget (OMB) for review and approval in accordance with the Paperwork Reduction Act of 1995. The proposed information collection is published to obtain comments from the public and affected agencies.

Comments are encouraged and will be accepted for sixty days until December 2, 2002. This process is conducted in accordance with 5 CFR 1320.10.

If you have comments especially on the estimated public burden or associated response time, suggestions, or need a copy of the proposed information collection instrument with instructions or additional information, please contact Gretchen DePasquale, Office of Community Oriented Policing Services, 1100 Vermont Avenue, NW., Washington, DC 20530.

Written comments and suggestions from the public and affected agencies concerning the proposed collection of information are encouraged. Your comments should address one or more of the following points:

(1) Evaluate whether the proposed collection of information is necessary for the proper performance of the functions of the agency, including whether the information will have practical utility;

(2) Evaluate the accuracy of the agency's estimate of the burden of the proposed collection of information, including the validity of the methodology and assumptions used;

(3) Enhance the quality, utility, and clarity of the information to be collected; and

(4) Minimize the burden of the collection of information on those who are to respond, including through the use of appropriate automated, electronic, mechanical, or other technological collection techniques or other forms of information technology, *e.g.,* permitting electronic submission of responses.

Overview of this information collection:

(1) *Type of Information Collection:* New Collection.

(2) *Title of the Form/Collection:* Methamphetamine Project, Final Update Report (FUR).

(3) *Agency form number,if any, and the applicable component of the Department of Justice sponsoring the collection:* Form Number: None. U.S. Department of Justice, Office of Community Oriented Policing Services (COPS).

(4) *Affected public who will be asked or required to respond, as well as a brief abstract:* Primary: Law Enforcement Agency. Other: Universities and Private Non-Profit Agencies. Abstract: The information collection will be used by the COPS Office to determine grantee's progress toward grant implementation and for compliance monitoring efforts.

(5) *An estimate of the total number of respondents and the amount of time estimated for an average respondent to respond:* There will be an estimated 100 responses from grantees. The estimated amount of time required for the average respondent to respond is 3.0 hours.

(6) *An estimate of the total public burden (in hours) associated with the collection:* 325 hours.

FOR FURTHER INFORMATION CONTACT: Brenda Dyer, Deputy Clearance Officer, Information Management and Security Staff, Justice Management Division, United States Department of Justice, 601 D Street NW., Patrick Henry Building, Suite 1600, NW., Washington, DC 20530.

Dated: September 26, 2002.

Brenda Dyer,

Deputy Clearance Officer, United States Department of Justice.

[FR Doc. 02–25000 Filed 10–1–02; 8:45 am]

BILLING CODE 4410–AT–M

DEPARTMENT OF JUSTICE

Office of Community Oriented Policing Services (COPS); Agency Information Collection Activities: Proposed collection; Comments Requested

ACTION: 60-Day Notice of Information Collection Under Review: New Collection: Universal Hiring Program Extension Request Worksheet.

The Department of Justice (DOJ) Office of Community Oriented Policing Service (COPS) has submitted the following information collection request to the Office of Management and Budget (OMB) for review and approval in accordance with the Paperwork Reduction Act of 1995. The proposed information collection is published to obtain comments from the public and affected agencies.

Comments are encouraged and will be accepted for sixty days until December 2, 2002. This process is conducted in accordance with 5 CFR 1320.10.

If you have comments especially on the estimated public burden or associated response time, suggestions, or need a copy of the proposed information collection instrument with instructions or additional information, please contact Gretchen DePasquale, Office of Community Oriented Policing Services, 1100 Vermont Avenue, NW., Washington, DC 20530.

Written comments and suggestions from the public and affected agencies concerning the proposed collection of information are encouraged. Your comments should address one or more of the following four points:

(1) Evaluate whether the proposed collection of information is necessary for the proper information of the functions of the agency, including whether the information will have practical utility;

(2) Evaluate the accuracy of the agency's estimate of the burden of the proposed collection of information, including the validity of the methodology and assumptions used;

(3) Enhance the quality, utility, and clarity of the information to be collected; and

(4) Minimize the burden of collection of information on those who are to respond, including through the use of appropriated automated, electronic, mechanical, or other technological collection techniques or other forms of information technology, e.g., permitting electronic submission of responses.

Overview of this information collection:

(1) *Type of Information Collection:* New Collection.

(2) *Title of the Form/Collection:* Universal Hiring Program Extension Request Worksheet.

(3) *Agency form number, if any, and the applicable component of the Department of Justice sponsoring the collection:* Form Number: None. U.S. Department of Justice Office of Community Oriented Policing Services (COPS).

(4) *Affected public who will be asked or required to respond, as well as a brief abstract:* Primary: Law Enforcement Agencies. Other: none. Abstract: The information collected will be used by the COPS Office to assess grantees' requests for no-cost extensions to their Universal Hiring Program grants.

(5) *An estimate of the total number of respondents and the amount of time estimated for an average respondent to respond:* There will be an estimated 4,000 responses annually from grantees. The estimated amount of time required for the average respondent to respond is 30 minutes.

(6) *An estimate of the total burden (in hours) associated with the collection:* 2,000 hours.

FOR FURTHER INFORMATION CONTACT: Brenda Dyer, Deputy Clearance Officer, Information Management and Security Staff, Justice Management Division, United States Department of Justice, 601 D Street NW., Patrick Henry Building, Suite 1600, NW., Washington, DC 20530.

Dated: September 26, 2002.

Brenda Dyer,

Deputy Clearance Officer, United States Department of Justice.

[FR Doc. 02–25001 Filed 10–1–02; 8:45 am]

BILLING CODE 4410–AT–M

DEPARTMENT OF JUSTICE

Immigration and Naturalization Service

Agency Information Collection Activities: Comment Request

ACTION: 60-day notice of information collection under review; H–1B Data Collection and Filing Fee Exemption; I–129W.

The Department of Justice, Immigration and Naturalization Service has submitted the following information collection request for review and clearance in accordance with the Paperwork Reduction Act of 1995. The proposed information collection is published to obtain comments from the public and affected agencies. Comments are encouraged and will be accepted for sixty days until December 2, 2002.

Written comments and suggestions from the public and affected agencies concerning the proposed collection of information should address one or more of the following four points:

(1) Evaluate whether the proposed collection of information is necessary for the proper performance of the functions of the agency, including whether the information will have practical utility;

(2) Evaluate the accuracy of the agencies estimate of the burden of the proposed collection of information, including the validity of the methodology and assumptions used;

(3) Enhance the quality, utility, and clarity of the information to be collected; and

(4) Minimize the burden of the collection of information on those who are to respond, including through the use of appropriate automated, electronic, mechanical, or other technological collection techniques or other forms of information technology, e.g., permitting electronic submission of responses.

Overview of this information collection:

(1) *Type of Information Collection: Extension of currently approved collection.*

(2) *Title of the Form/Collection:* H–1B Data Collection and Filing Fee Exemption.

(3) *Agency form number, if any, and the applicable component of the Department of Justice sponsoring the collection:* Form I–129W. Adjudications Division, Immigration and Naturalization Service.

(4) *Affected public who will be asked or required to respond, as well as a brief abstract: Primary:* Business or other for-profit. This addendum to Form I–129 will be used by the INS to determine if an H–1B petitioner is exempt from the additional filing fee of $500, as provided by the American Competitiveness and Workforce Improvement Act of 1998.

(5) *An estimate of the total number of respondents and the amount of time estimated for an average respondent to respond:* 128,092 responses at 30 minutes (.50) per response.

(6) *An estimate of the total public burden (in hours) associated with the collection:* 64,046 annual burden hours.

If you have additional comments, suggestions, or need a copy of the proposed information collection instrument with instructions, or additional information, please contact Richard A. Sloan 202–514–3291, Director, Regulations and Forms Services Division, Immigration and Naturalization Service, U.S. Department of Justice, Room 4034, 425 I Street, NW., Washington, DC 20536. Additionally, comments and/or suggestions regarding the item(s) contained in this notice, especially regarding the estimated public burden and associated response time may also be directed to Mr. Richard A. Sloan.

If additional information is required contact: Mr. Robert B. Briggs, Clearance Officer, United States Department of Justice, Information Management and Security Staff, Justice Management Division, 601 D Street, NW., Suite 1600, Patrick Henry Building, Washington, DC 20004.

Dated: September 27, 2002.

Richard A. Sloan,

Department Clearance Officer, Department of Justice, Immigration and Naturalization Service.

[FR Doc. 02–25029 Filed 10–1–02; 8:45 am]

BILLING CODE 4410–10–M

DEPARTMENT OF JUSTICE

Immigration and Naturalization Service

Agency Information Collection Activities: Proposed Collection; Comment Request

ACTION: 30-day notice of information collection under review: Employment Eligibility Verification; Form I–9.

The Department of Justice, Immigration and Naturalization Service (INS) has submitted the following information collection request to the Office of Management and Budget (OMB) for review and clearance in accordance with the Paperwork Reduction Act of 1995. A notice containing this information collection was previously published in the **Federal Register** on July 23, 2002, at 67 FR 48210. The notice allowed for a 60-day public review and comment period. No comments were received by the INS on this proposed information collection.

The purpose of this notice is to allow an additional 30 days for public comments. Comments are encouraged and will be accepted until November 1, 2002. This process is conducted in accordance with 5 CFR 1320.10.

Written comments and/or suggestions regarding the items contained in this notice, especially regarding the estimated public burden and associated response time, should be directed to the Office of Management and Budget, Office of Information and Regulatory Affairs, Attention: Department of Justice Desk Officer, 725–17th Street, NW., Room 10235, Washington, DC 20530.

Written comments and suggestions from the public and affected agencies concerning the proposed collection of information should address one or more of the following four points:

(1) Evaluate whether the proposed collection of information is necessary for the proper performance of the functions of the agency, including whether the information will have practical utility;

(2) Evaluate the accuracy of the agency's estimate of the burden of the proposed collection of information, including the validity of the methodology and assumptions used;

(3) Enhance the quality, utility, and clarity of the information to be collected; and

(4) Minimize the burden of the collection of information on those who are to respond, including through the use of appropriate automated, electronic, mechanical, or other technological collection techniques or other forms of information technology, e.g., permitting electronic submission of responses.

Overview of this information collection:

(1) *Type of information Collection:* Extension of currently approved collection.

(2) *Title of the Form/Collection:* Employment Eligibility Verification.

(3) *Agency form number, if any, and the applicable component of the Department of Justice sponsoring the collection:* Form I–9. Program Division, Immigration and Naturalization Service.

(4) *Affected public who will be asked or required to respond, as well as a brief abstract: Primary:* Individuals or Households. This form was developed to facilitate compliance with Section 274A of the Immigration and Nationality Act (the Act), as amended by the Immigration Reform and Control Act of 1986 (IRCA), which prohibits the knowing employment of unauthorized aliens. The information collected is used by employers or by recruiters for enforcement of provisions of immigration laws that are designed to control the employment of unauthorized aliens.

(5) *An estimate of the total number of respondents and the amount of time estimated for an average respondent to respond:* 78,000,000 respondents at 9 minutes or (.15) hours per response and 20,000,000 record keepers at 4 minutes or (.066) hours per response.

(6) *An estimate of the total public burden (in hours) associated with the collection:* 13,020,000 annual burden hours.

If you have additional comments, suggestions, or need a copy of the proposed information collection instrument with instructions, or additional information, please contact Richard A. Sloan 202–514–3291, Director, Regulations and Forms Services Division, Immigration and Naturalization Service, U.S. Department of Justice, Room 4034, 425 I Street, NW., Washington, DC 20536. Additionally, comments and/or suggestions regarding the item(s) contained in this notice, especially regarding the estimated public burden and associated response time may also be directed to Mr. Richard A. Sloan.

If additional information is required contact: Mr. Robert B. Briggs, Clearance Officer, United States Department of Justice, Information Management and Security Staff, Justice Management Division, Patrick Henry Building, 601 D Street, NW., Suite 1600, Washington, DC 20530.

Dated: September 27, 2002.

Richard A. Sloan,

Department Clearance Officer, Department of Justice, Immigration and Naturalization Service.

[FR Doc. 02–25030 Filed 10–1–02; 8:45 am]

BILLING CODE 4410–10–M

DEPARTMENT OF LABOR

Pension and Welfare Benefits Administration

Teleconferences; Working Groups on Fiduciary Education and Training, Orphan Plans, and Electronic Reporting Advisory Council on Employee Welfare and Pension Benefits Plans: Notice of Meeting

Pursuant to the authority contained in Section 512 of the Employee Retirement Income Security Act of 1974 (ERISA), 29 U.S.C. 1142, the Working Groups assigned by the Advisory Council on Employee Welfare and Pension Benefit Plans to study fiduciary education and training, orphan plans, and electronic reporting will hold open public meetings consecutively, via teleconference, on Thursday, October 17, 2002, in the conference room in Suite N–5677, U.S. Department of Labor Building, Second and Constitution Avenue NW., Washington, DC 20210.

The purpose of the open meetings is for Working Group members to discuss their initial findings concerning the issues studied in preparation for drafting recommendations for the Secretary of Labor.

The teleconference meetings will begin with the Working Group on Fiduciary Education and Training at 10 a.m., followed by the Working Group on Orphan Plans at 1:30 p.m., and will conclude with the Working Group on Electronic Reporting at 3:30 p.m.

Members of the public are encouraged to file a written statement pertaining to the topics by sending 20 copies on or before October 10, 2002, to Sharon Morrissey, Executive Secretary, ERISA Advisory Council, U.S. Department of Labor, Room N–5677, 200 Constitution Avenue, NW., Washington, DC 20210. Individuals or representatives of organizations wishing to address the Working Group should forward requests to the Executive Secretary or telephone (202) 693–8668. Oral presentations will be limited to 20 minutes, but an extended statement may be submitted for the record. Individuals with disabilities who need special accommodations should contact Sharon Morrissey by October 10, 2002, at the address indicated in this notice.

Organizations or individuals may also submit statements for the record without testifying. Twenty (20) copies of such statements should be sent to the Executive Secretary of the Advisory Council at the above address. Papers will be accepted and included in the record of the meeting if received on or before October 10, 2002.

Signed at Washington, DC, this 26th day of September 2002.

Ann L. Combs,

Assistant Secretary, Pension and Welfare Benefits Administration.

[FR Doc. 02–24996 Filed 10–1–02; 8:45 am]

BILLING CODE 4510–29–M

NATIONAL ARCHIVES AND RECORDS ADMINISTRATION

Records Schedules; Availability and Request for Comments

AGENCY: National Archives and Records Administration (NARA).

ACTION: Notice of availability of proposed records schedules; request for comments.

SUMMARY: The National Archives and Records Administration (NARA) publishes notice at least once monthly of certain Federal agency requests for records disposition authority (records schedules). Once approved by NARA, records schedules provide mandatory instructions on what happens to records when no longer needed for current Government business. They authorize the preservation of records of continuing value in the National Archives of the United States and the destruction, after a specified period, of records lacking administrative, legal, research, or other value. Notice is published for records schedules in which agencies propose to destroy records not previously authorized for disposal or reduce the retention period of records already authorized for disposal. NARA invites public comments on such records schedules, as required by 44 U.S.C. 3303a(a).

DATES: Requests for copies must be received in writing on or before November 18, 2002. Once the appraisal of the records is completed, NARA will send a copy of the schedule. NARA staff usually prepare appraisal memorandums that contain additional information concerning the records covered by a proposed schedule. These, too, may be requested and will be provided once the appraisal is completed. Requesters will be given 30 days to submit comments.

ADDRESSES: To request a copy of any records schedule identified in this notice, write to the Life Cycle Management Division (NWML), National Archives and Records Administration (NARA), 8601 Adelphi Road, College Park, MD 20740–6001. Requests also may be transmitted by FAX to 301–837–3698 or by e-mail to records.mgt@nara.gov. Requesters must cite the control number, which appears in parentheses after the name of the agency which submitted the schedule, and must provide a mailing address. Those who desire appraisal reports should so indicate in their request.

FOR FURTHER INFORMATION CONTACT: Larry Baume, Acting Director, Life Cycle Management Division (NWML), National Archives and Records Administration, 8601 Adelphi Road, College Park, MD 20740–6001. Telephone: 301–837–1505. E-mail: *records.mgt@nara.gov.*

SUPPLEMENTARY INFORMATION: Each year Federal agencies create billions of records on paper, film, magnetic tape, and other media. To control this accumulation, agency records managers prepare schedules proposing retention periods for records and submit these schedules for NARA's approval, using the Standard Form (SF) 115, Request for Records Disposition Authority. These schedules provide for the timely transfer into the National Archives of historically valuable records and authorize the disposal of all other records after the agency no longer needs them to conduct its business. Some schedules are comprehensive and cover all the records of an agency or one of its major subdivisions. Most schedules, however, cover records of only one office or program or a few series of records. Many of these update previously approved schedules, and some include records proposed as permanent.

No Federal records are authorized for destruction without the approval of the Archivist of the United States. This approval is granted only after a thorough consideration of their administrative use by the agency of origin, the rights of the Government and of private persons directly affected by the Government's activities, and whether or not they have historical or other value.

Besides identifying the Federal agencies and any subdivisions requesting disposition authority, this public notice lists the organizational unit(s) accumulating the records or indicates agency-wide applicability in the case of schedules that cover records that may be accumulated throughout an

agency. This notice provides the control number assigned to each schedule, the total number of schedule items, and the number of temporary items (the records proposed for destruction). It also includes a brief description of the temporary records. The records schedule itself contains a full description of the records at the file unit level as well as their disposition. If NARA staff has prepared an appraisal memorandum for the schedule, it too includes information about the records. Further information about the disposition process is available on request.

Schedules Pending

1. *Department of Agriculture, Foreign Agricultural Service (N1–166–02–2, 4 items, 4 temporary items).* **Federal Register** Docket files. Included are copies of documents submitted for publication, background materials, public correspondence, and electronic copies of records created using electronic mail and word processing.

2. *Department of Justice, Drug Enforcement Administration (N1–170–02–4, 4 items, 2 temporary items).* Inputs and outputs for an electronic system relating to clandestine laboratory seizures. The electronic data is proposed for permanent retention along with the system documentation.

3. *Department of Labor, Bureau of Labor Statistics (N1–257–01–1, 8 items, 5 temporary items).* Inputs, extra copies of system outputs, and extra copies of documentation for the Occupational Outlook Technical Memoranda Record Files electronic system. Also included are electronic records created using electronic mail and word processing. Proposed for permanent retention are paper records that pre-date the automated system, electronic data, and system documentation.

4. *Department of the Treasury, Bureau of Public Debt (N1–53–02–12, 3 items, 3 temporary items).* Records pertaining to such matters as interest payments on savings bonds, bank error adjustments, and miscellaneous accounting work.

5. *Department of the Treasury, Bureau of the Public Debt (N1–53–02–7), 10 items, 10 temporary items).* Records of the Division of Accounting Services relating to financial and securities accounting, including transaction reconciliation.

6. *Department of the Treasury, Bureau of Public Debt (N1–53–02–11, 2 items, 2 temporary items).* Records transferred from the Federal Reserve Bank of Philadelphia relating to the Federal Housing Administration Debenture Program. Included are such records as system conversion reports, daily work envelopes, paid checks, daily summary reports, and address list updates.

7. *Department of the Treasury, Bureau of the Public Debt (N1–53–02–15, 5 items, 5 temporary items).* Office of Chief Counsel litigation case files, weekly reports concerning legal activities, and reports to Congress and GAO concerning regulations to be published in the **Federal Register**. Also included are electronic copies of documents created using electronic mail and word processing.

8. *Department of the Treasury, Bureau of the Public Debt (N1–53–02–16, 6 items, 6 temporary items).* Reports used by the Treasury Securities Accounting Branch to identify errors and ensure accurate reporting of the public debt. Also included are electronic copies of documents created using electronic mail and word processing.

9. *Department of the Treasury, Office of Foreign Assets Control (N1–56–02–4, 64 items, 55 temporary items).*

Records relating to foreign assets control, including such records as an electronic tracking system for correspondence, working files, briefing papers, guidelines, case files on civil penalties, financial management files, enforcement case files, legislative materials, and licensing applications. Also included are electronic copies of records created using electronic mail and word processing. Proposed for permanent retention are such files as recordkeeping copies of blocked assets reports and the blocked assets master data file along with the related system documentation, case files relating to blocked persons and specially designated nationals, and significant subject files.

10. *Department of the Treasury, United States Mint (N1–104–00–1, 27 items, 21 temporary items).* Facilitative records relating to the design, production, marketing, and sales of coins, medals, and other Mint products, including electronic copies of records created using electronic mail and word processing. Proposed for permanent retention are recordkeeping copies of mint product case files, numismatic advertising and promotional materials, coin and medal designs selected for final review, product summary reports, and Congressional inquiries.

11. *Department of Veterans Affairs, Veterans Health Administration (N1–15–02–4, 12 items, 12 temporary items).* Records of the Pathology and Laboratory Medicine Service relating to such matters as general laboratory quality control, proficiency test surveys, instrument maintenance, test procedures, blood bank operations, and the donation and receipt of organs for transplantation. Also included are electronic copies of records created using electronic mail and word processing systems. Reports that relate to individual patient care are filed in the patient's medical folder, which was previously approved for disposal 75 years after last episode of care.

12. *Administrative Office of the U.S. Courts, Office of Legislative Affairs (N1–116–02–4, 7 items, 5 temporary items).* Inputs to and outputs of the Judicial Vacancies Listings Database and reports summarizing items in the Congressional Record that are relevant to the judiciary. Also included are electronic copies of documents created using electronic mail and word processing. The master file of the Judicial Vacancies Listings Database is proposed for permanent retention along with the related system documentation.

13. *Environmental Protection Agency, Agency-wide (N1–412–99–17, 3 items, 2 temporary items).* Records relating to international activities and agreements, including bilateral and cooperative research agreements, correspondence, and related documentation. Also included are electronic copies of documents created using electronic mail and word processing. Proposed for permanent retention are recordkeeping copies of files relating to those international activities and agreements that result in significant changes in agency policies and practices or generate great media attention

14. *Federal Retirement Thrift Investment Board, Office of Benefits and Investments (N1–474–02–1, 3 items, 3 temporary items).* Paper and electronic copies of records relating to loan and withdrawal policies and procedures for Federal employees covered under the Thrift Savings Plan. Also included are electronic copies of records created using electronic mail and word processing.

15. *National Archives and Records Administration, Office of Records Services '' Washington, DC (N1–64–02–11, 6 items, 5 temporary items).* Records relating to the Modern Archives Institute. Included are such files as course evaluation forms completed by participants, records relating to administrative and logistics matters, background papers accumulated by instructors, and electronic copies of records created using electronic mail and word processing. Proposed for permanent retention are recordkeeping copies of files accumulated by the Institute Director, which include such records as curriculum plans, lists of class participants, class profiles, aggregated evaluation data, and other

records which document major changes in course content and structure.

Dated: September 24, 2002.

Michael J. Kurtz,

Assistant Archivist for Record Services, Washington, DC.

[FR Doc. 02–24955 Filed 10–1–02; 8:45 am]

BILLING CODE 7515–01–P

NATIONAL FOUNDATION ON THE ARTS AND HUMANITIES

Notice of Guidelines for Ensuring and Maximizing the Quality, Objectivity, Utility, and Integrity of Information Disseminated by the National Endowment for the Arts

September 26, 2002.

AGENCY: National Endowment for the Arts, National Foundation on the Arts and Humanities.

ACTION: Notice.

SUMMARY: The National Endowment for the Arts (Endowment) announces that its Guidelines for Ensuring and Maximizing the Quality, Objectivity, Utility, and Integrity of Information Disseminated by the National Endowment for the Arts have been posted on the Endowment Web site, *www.arts.gov.*

FOR FURTHER INFORMATION CONTACT: Hope O'Keeffe, Acting General Counsel, telephone 202–682–5418, *ogc@arts.endow.gov.* Hearing-impaired individuals may contact the Endowment by TDD/TTY at 202–682–5496.

SUPPLEMENTARY INFORMATION: Section 515 of the Treasury and General Government Appropriations Act for FY 2001 (Pub. L. 106–554) requires each Federal agency to publish guidelines for ensuring and maximizing the quality, objectivity, utility, and integrity of the information it disseminates. Agency guidelines must be based on government-wide guidelines issued by the Office of Management and Budget (OMB). In compliance with this statutory requirement and OMB instructions, the Endowment has posted its Information Quality Guidelines on the Endowment's Web site (*www.arts.gov*).

The Guidelines describe the agency's procedures for ensuring the quality of information that it disseminates and the procedures by which an affected person may obtain correction of information disseminated by the Endowment that does not comply with the Guidelines. Persons who cannot access the Guidelines through the Internet may request a paper or electronic copy by contacting the Office of the General Counsel.

Dated: September 26, 2002.

For the National Endowment for the Arts.

Hope O'Keeffe,

Acting General Counsel.

[FR Doc. 02–24980 Filed 10–1–02; 8:45 am]

BILLING CODE 7537–01–P

NATIONAL ENDOWMENT FOR THE HUMANITIES

Notice of Guidelines for Ensuring and Maximizing the Quality, Objectivity, Utility, and Integrity of Information Disseminated by the National Endowment for the Humanities

September 26, 2002.

AGENCY: National Endowment for the Humanities.

ACTION: Notice of availability of final guidelines.

SUMMARY: The National Endowment for the Humanities (NEH) announces that its Guidelines for Ensuring and Maximizing the Quality, Objectivity, Utility, and Integrity of Information Disseminated by the National Endowment for the Humanities have been posted on the NEH Web site, *http://www.neh.gov.*

FOR FURTHER INFORMATION CONTACT: Daniel C. Schneider, General Counsel, telephone 202–606–8322, *gencounsel@neh.gov.* Hearing-impaired individuals may contact the NEH by TDD/TTY at 202–606–8338.

SUPPLEMENTARY INFORMATION: Section 515 of the Treasury and General Government Appropriations Act for FY 2001 (Pub. L. 106–554) requires each Federal agency to publish guidelines for ensuring and maximizing the quality, objectivity, utility, and integrity of the information it disseminates. Agency guidelines must be based on government-wide guidelines issued by the Office of Management and Budget (OMB). In compliance with this statutory requirement and OMB instructions, the NEH has posted its Information Quality Guidelines on the NEH's Web site (*http://www.neh.gov*).

The Guidelines describe the agency's procedures for ensuring the quality of information that it disseminates and the procedures by which an affected person may obtain correction of information disseminated by the NEH that does not comply with the Guidelines. Persons who cannot access the Guidelines through the Internet may request a paper or electronic copy by contacting the Office of the General Counsel.

Effective Date: October 1, 2002.

Dated: September 26, 2002.

For the National Endowment for the Humanities.

Daniel C. Schneider,

General Counsel.

[FR Doc. 02–25068 Filed 10–1–02; 8:45 am]

BILLING CODE 7536–01–P

NATIONAL LABOR RELATIONS BOARD

Information Quality Guidelines

AGENCY: National Labor Relations Board.

ACTION: Final Guidelines.

SUMMARY: The National Labor Relations Board (NLRB or the Board) announces that its final Information Quality Guidelines have been posted on the NLRB Web site. Information Quality Guidelines for the Agency's Office of Inspector General are included as Appendix A to those Guidelines.

DATES: These Guidelines are effective October 1, 2002.

ADDRESSES: Submit any comments related to the NLRB's Information Quality Guidelines to the Executive Secretary, National Labor Relations Board, 1099 14th Street, NW., Washington, DC 20570. Comments may be submitted by e-mail to: *Dataquality@NLRB.gov* or by facsimile to (202) 273–4270.

FOR FURTHER INFORMATION CONTACT: Lester A. Heltzer, Acting Executive Secretary, National Labor Relations Board, 1099 14th Street, NW., Washington, DC 20570; telephone (202) 273–1936; facsimile (202) 273–4270; e-mail to *Lester.Heltzer@NLRB.gov.*

SUPPLEMENTARY INFORMATION: Section 515 of the Treasury and General Government Appropriations Act for FY 2001 (Public Law No. 106–554) requires each Federal agency to publish Guidelines for ensuring and maximizing the quality, objectivity, utility, and integrity of the information it disseminates to the public. Agency Guidelines must conform to government-wide guidelines issued by the Office of Management and Budget (OMB). In compliance with this statutory requirement and OMB instructions, the NLRB has posted its Information Quality Guidelines on the NLRB Web site (*www.NLRB.gov*) in the ''Public Notices'' area. The Guidelines describe the Agency's procedures for ensuring the quality of information that it disseminates to the public and the procedures by which an affected person may obtain correction of information disseminated by the NLRB that does not

comply with the Guidelines. Persons who cannot access the Guidelines through the Internet may request a paper or electronic copy by contacting the Division of Information at (202) 273–1991.

Dated: September 27, 2002.

Lester A. Heltzer,

Acting Executive Secretary.

[FR Doc. 02–25050 Filed 10–1–02; 8:45 am]

BILLING CODE 7545–01–M

NUCLEAR REGULATORY COMMISSION

Agency Information Collection Activities: Submission for the Office of Management and Budget (OMB) Review; Comment Request

AGENCY: Nuclear Regulatory Commission (NRC).

ACTION: Notice of the OMB review of information collection and solicitation of public comment.

SUMMARY: The NRC has recently submitted to OMB for review the following proposal for the collection of information under the provisions of the Paperwork Reduction Act of 1995 (44 U.S.C. Chapter 35). The NRC hereby informs potential respondents that an agency may not conduct or sponsor, and that a person is not required to respond to, a collection of information unless it displays a current valid OMB control number.

1. *Type of submission, new, revision, or extension:* Revision.

2. *The title of the information collection:* 10 CFR part 30—Rules of General Applicability to Domestic Licensing of Byproduct Material.

3. *The form number if applicable:* Not applicable.

4. *How often the collection is required:* Required reports are collected and evaluated on a continuing basis as events occur. There is a one-time submittal of information to receive a license. Renewal applications are submitted every 10 years. Information submitted in previous applications may be referenced without being resubmitted. In addition, recordkeeping must be performed on an on-going basis.

5. *Who will be required or asked to report:* All persons applying for or holding a license to manufacture, produce, transfer, receive, acquire, own, possess, or use radioactive byproduct material.

6. *An estimate of the number of responses:* 35,709 (7,965 NRC licensees (3,287 Reporting + 4,678 Recordkeepers) and 27,744 Agreement State licensees (10,839 Reporting + 16,905 recordkeepers)).

7. *The estimated number of annual respondents:* 21,583 (4,678 NRC licensees and 16,905 Agreement State licensees).

8. *An estimate of the total number of hours needed annually to complete the requirement or request:* 247,239 (NRC licensees 55,488 hours (26,875 reporting + 28,613 recordkeeping) and Agreement State licensees 191,751 hours (90,967 reporting + 100,784 recordkeeping).

9. *An indication of whether Section 3507(d), Pub. L. 104–13 applies:* Not applicable.

10. *Abstract:* 10 CFR part 30 establishes requirements that are applicable to all persons in the United States governing domestic licensing of radioactive byproduct material. The application, reporting and recordkeeping requirements are necessary to permit the NRC to make a determination whether the possession, use, and transfer of byproduct material is in conformance with the Commission's regulations for protection of the public health and safety.

A copy of the final supporting statement may be viewed free of charge at the NRC Public Document Room, One White Flint North, 11555 Rockville Pike, Room O–1 F21, Rockville, MD 20852. OMB clearance requests are available at the NRC worldwide Web site: *http://www.nrc.gov/public-involve/doc-comment/omb/index.html.* The document will be available on the NRC home page site for 60 days after the signature date of this notice.

Comments and questions should be directed to the OMB reviewer listed below by November 1, 2002. Comments received after this date will be considered if it is practical to do so, but assurance of consideration cannot be given to comments received after this date.

Bryon Allen, Office of Information and Regulatory Affairs (3150–0017), NEOB–10202, Office of Management and Budget, Washington, DC 20503.

Comments can also be submitted by telephone at (202) 395–3087.

The NRC Clearance Officer is Brenda Jo. Shelton, 301–415–7233.

Dated at Rockville, Maryland, this 26th day of September, 2002.

For the Nuclear Regulatory Commission.

Brenda Jo. Shelton,

NRC Clearance Officer, Office of the Chief Information Officer.

[FR Doc. 02–25080 Filed 10–1–02; 8:45 am]

BILLING CODE 7590–01–P

NUCLEAR REGULATORY COMMISSION

[Docket Nos. STN 50–528, 529, 530 and 72–44]

Arizona Public Service Company, Palo Verde Nuclear Generating Station, Units 1, 2 and 3; Environmental Assessment and Finding of No Significant Impact

The U.S. Nuclear Regulatory Commission (NRC or Commission) is considering issuance of an exemption from Title 10 of the Code of Federal Regulations (10 CFR) Part 72 for the general license utilized by the Arizona Public Service Company (APS or licensee). The exemption is pursuant to 10 CFR 72.7 for the storage of spent fuel in an independent spent fuel storage installation (ISFSI) associated with the operation of the Palo Verde Nuclear Generating Station, Units 1, 2, and 3 (PVNGS), located in Maricopa County, Arizona. Therefore, as required by 10 CFR 51.21, the NRC is issuing this environmental assessment and finding of no significant impact.

Environmental Assessment

Identification of the Proposed Action

The proposed action would exempt Arizona Public Service Company from the requirements of 10 CFR 72.212(a)(2), 72.212(b)(2)(i)(A), 72.212(b)(7), and 10 CFR 72.214 for PVNGS Units 1, 2, and 3. These regulations specifically require compliance with the conditions set forth in the Certificate of Compliance (CoC) for each dry spent fuel storage cask used by an ISFSI general licensee. The dry cask storage system used by APS is the NAC–UMS Universal Storage System, Certificate of Compliance Number 1015. The NAC–UMS CoC provides conditions for requirements of Appendix A, Technical Specifications, and Appendix B, Approved Content and Design Features. The proposed action would allow APS to deviate from (1) the removable surface contamination limits in LCO 3.2.1 of Appendix A, and (2) the vertical seismic limits in paragraph B 3.4.1.3 of Appendix B. The proposed action would implement the limits requested by NAC International in the NAC–UMS CoC amendment request currently under staff review.

The proposed action is in accordance with the licensee's application dated May 1, 2002, as supplemented by letter dated June 19, 2002.

The Need for the Proposed Action

The proposed action is needed because APS plans to begin its initial dry cask spent fuel loading campaign

with PVNGS Unit 2 in November 2002. APS plans to continue loading spent fuel in dry cask storage with PVNGS Unit 1 in May 2003 and PVNGS Unit 3 in January 2004. The licensee has stated that Unit 2 will lose its full-core offload capability following the fall 2003 refueling outage. Units 1 and 3 will lose their full-core offload capability upon startup from the following outages, consecutively. The initial loading of spent fuel into dry casks needs to be accomplished during winter 2002 to support subsequent refueling outage schedules and dry cask load schedules for all the units. Deferral of the cask loading campaign is not desired because the preparation, time and resources required are extensive and would significantly impact the associated unit refueling outage. Additionally, dry cask loading operations cannot be conducted for a unit during the same time as refueling activities because of new fuel receipt and use of the same APS staff. If the first cask loading campaign is deferred the delay would cascade to subsequent units, remove any margin from subsequent cask load schedules, increase scheduling pressures, and potentially impact plant safety. The proposed action is necessary because the 10 CFR 72.214 rulemaking to implement the NAC–UMS CoC amendment is not projected for completion until December 2002, which will not support the APS dry cask storage loading schedule.

Environmental Impacts of the Proposed Action

The NRC has completed its evaluation of the proposed action and concludes that there is no significant environmental impact if the exemption is granted. The potential environmental impact of using the NAC–UMS Universal Storage System was initially presented in the Environmental Assessment (EA) for the Final Rule to add the NAC–UMS Universal Storage System to the list of approved spent fuel storage casks in 10 CFR 72.214 (65 FR 62581, dated November 20, 2000), as revised in Amendment No. 1 (65 FR 76896, dated February 20, 2001) and in Amendment No. 2 (66 FR 52486, dated October 16, 2001). The revised surface contamination and vertical seismic limits do not increase the probability or consequences of accidents, no changes are being made in the types of any effluents that may be released offsite, and there is no significant increase in occupational or public radiation exposure. Therefore, there are no significant radiological environmental impacts associated with the proposed action.

With regard to potential nonradiological impacts, the proposed action does not have a potential to affect any historic sites. It does not affect nonradiological plant effluents and has no other environmental impact. Therefore, there are no significant nonradiological environmental impacts associated with the proposed action.

Accordingly, the NRC concludes that there are no significant environmental impacts associated with the proposed action.

Alternatives to the Proposed Action

Since there is no significant environmental impact associated with the proposed action, alternatives with equal or greater environmental impact were not evaluated. As an alternative to the proposed action, the staff considered denial of the proposed action. Denial of the exemption would result in no change in current environmental impact, but would result in a potential dose increase to workers involved in cask decontamination activities.

Agencies and Persons Consulted

On September 3, 2002, the staff consulted with Mr. William Wright of the Arizona Radiation Regulatory Agency, regarding the environmental impact of the proposed action. He had no comments.

Finding of No Significant Impact

The environmental impacts of the proposed action have been reviewed in accordance with the requirements set forth in 10 CFR part 51. Based on the foregoing Environmental Assessment, the Commission finds that the proposed action of granting an exemption from 10 CFR 72.212(a)(2), 72.212(b)(2)(i)(A), 72.212(b)(7), and 72.214 allowing Arizona Public Service Company to deviate from the removable surface contamination limits and the vertical seismic limits, will not significantly impact the quality of the human environment. Accordingly, the Commission has determined not to prepare an environmental impact statement for the proposed action.

For further details with respect to this exemption request, see the APS letter dated May 1, 2002, as supplemented by letter dated June 19, 2002. The request for exemption was docketed under 10 CFR part 72, Docket 72–44. The NRC maintains an Agencywide Documents Access and Management System (ADAMS), which provides text and image files of NRC's public documents. These documents may be accessed through the NRC's Public Electronic Reading Room on the Internet at *http://www.nrc.gov/reading-rm/adams.html.* If you do not have access to ADAMS or if there are problems in accessing the documents located in ADAMS, contact the NRC Public Document Room (PDR) Reference staff at 1–800–397–4209, or 301–415–4737, or by e-mail at *pdr@nrc.gov.*

Dated at Rockville, Maryland, this 24th day of September, 2002.

For the Nuclear Regulatory Commission.

E. William Brach,

Director, Spent Fuel Project Office, Office of Nuclear Material Safety and Safeguards.

[FR Doc. 02–25082 Filed 10–1–02; 8:45 am]

BILLING CODE 7590–01–P

NUCLEAR REGULATORY COMMISSION

[Docket No. 70–27]

Environmental Assessment and Finding of No Significant Impact of License Amendment for BWX Technologies, Inc.

AGENCY: Nuclear Regulatory Commission.

ACTION: Amendment of BWX Technologies, Inc., Materials License SNM–42 To authorize elimination of LTC stack continuous monitoring.

The U.S. Nuclear Regulatory Commission is considering the amendment of Special Nuclear Material License SNM–42 to authorize elimination of Lynchburg Technology Center (LTC) stack continuous monitoring and revise other air monitoring stack action levels at the BWX Technologies, Inc., facility located in Lynchburg, VA, and has prepared an Environmental Assessment in support of this action.

Environmental Assessment

Docket: 70–27.

Licensee: BWX Technologies (BWXT), Inc., Navy Nuclear Fuel Division, Lynchburg, Virginia.

Subject: Environmental Assessment for license amendment request dated July 16, 2002.

1.0 Introduction

1.1 Background

The Nuclear Regulatory Commission (NRC) staff has received a license request, dated July 16, 2002, to amend Special Nuclear Material License SNM–42 to eliminate the need for continuous air monitoring at the LTC on the BWX Technologies, Inc. (BWXT) site in Lynchburg, Virginia. The purpose of this document is to assess the environmental consequences of the proposed license amendment.

The BWXT facility in Lynchburg, VA is authorized under SNM–42 to possess nuclear materials for the fabrication and assembly of nuclear fuel components. The facility supports the U.S. naval reactor program, fabricates research and university reactor components, and manufactures compact reactor fuel elements. The facility also performs recovery of scrap uranium. The LTC specifically conducts research and development activities related to the fabrication of nuclear fuel components.

1.2 Review Scope

This environmental assessment (EA) serves to present information and analysis for determining whether to issue a Finding of No Significant Impact (FONSI) or to prepare an Environmental Impact Statement (EIS). Should the NRC issue a FONSI, no EIS would be prepared and the license amendment would be granted.

This document serves to evaluate and document the impacts of the proposed action. Other activities on the site have previously been evaluated and documented in the 1991 Environmental Assessment (EA) for the renewal of the NRC license for BWXT. The 1991 document is referenced when no significant changes have occurred. Besides the proposed licensing action, operations will continue to remain limited to those authorized by the license.

1.3 Proposed Action

The proposed action is to amend NRC Materials License SNM–42 to eliminate the need for continuous air monitoring at the LTC. The duration of the proposed activity is for as long as the facility holds a license with the NRC, or until BWXT requests and the NRC approves a license amendment.

Activities, utilizing licensed material, are conducted at the LTC in support of operating divisions of Babcock and Wilcox and for other companies and government organizations. Some of these activities include: failure analysis, fatigue and fracture analysis, hot cell work, hot machine shop work, environmental chemistry analysis, and radiochemistry analysis. The hot cell is vented through the 50-meter stack, located on the roof of the facility. The hot cell facility consists of four independent beta-gamma type hot cells. Work in the hot cells consists of examinations to investigate extended burn-up commercial light water reactor fuel rods, examination of advanced spacer grid designs, failed in-core instrument detectors, and failed fuel rods. Because cutting and puncturing of irradiated fuel releases noble gases and other radioactive gases and particulates, the stack monitoring system for the hot cells needs to be capable of detecting noble gases and alpha and beta radiation. The hot cells are the only areas vented through the 50 meter stack which can release noble gases and other radioactive gases and particulates.

The current license requires BWXT to continuously monitor the 50-meter stack by a system capable of measuring alpha and beta particulates and noble gases. The licensee is proposing to perform continuous monitoring only when working with Post Accident Samples (PAS) or uncut or unpunctured irradiated fuel with significant volatile radioisotope inventories. During periods when this type of work is not being performed, and significant volatile radioisotope sources are absent, the licensee will monitor the stack daily for alpha and beta particulates. Daily monitoring of the LTC stack will not include any change in the type or form of special nuclear material (SNM) or any new or different operations from those currently authorized under BWXT's license.

This daily sampling of the 50-meter stack will be similar to the sampling protocol for other existing stacks at the site. The sampler will include a calibrated flow meter and a collection filter. The filter will be collected and analyzed on a daily basis for alpha and beta particulates.

1.4 Purpose and Need for Proposed Action

BWXT indicates that maintaining the continuous alpha and beta particulate and noble gas monitoring is costly and not justified when work with PAS or unpunctured irradiated fuel is performed only sporadically. BWXT stated that the current inventory of irradiated fuel at the LTC has been cut and placed in storage and that limited future work with unpunctured irradiated fuel is anticipated.

1.5 Alternatives

The alternatives available to the NRC are:

1. Approve the license amendment request as submitted;
2. Approve the license amendment with restrictions; or
3. Deny the amendment request.

2.0 Affected Environment

The affected environment for Alternatives 1 and 2 is the BWXT site. A full description of the site and its characteristics is given in the 1991 Environmental Assessment (EA) for the Renewal of the NRC license for BWXT. The BWXT facility is located on a 525 acre (2 km^2) site in the northeastern corner of Campbell County, approximately 5 miles (8km) east of Lynchburg, Virginia. This site is located in a generally rural area, consisting primarily of rolling hills with gentle slopes, farm land, and woodlands.

3.0 Effluent Releases and Monitoring

A full description of the effluent monitoring program at the site is provided in the 1991 Environmental Assessment for the Renewal of the NRC license for BWXT. Monitoring programs at the BWXT facility comprise effluent monitoring of air and water and environmental monitoring of various media (air, soil, vegetation, and groundwater). This program provides a basis for evaluation of public health and safety impacts, for establishing compliance with environmental regulations, and for development of mitigation measures if necessary. The monitoring program is not expected to change as a result of the proposed action. The NRC has reviewed the location of the environmental monitoring program sampling points, the frequency of sample collection, and the trends of the sampling program results in conjunction with the environmental pathway and exposure analysis and concluded that the monitoring program provides adequate protection of public health and safety.

The proposed activity will change the sampling of the 50-meter stack, which exhausts effluents from the hot cells, from continuous to daily, except when work with PAS or uncut or unpunctured irradiated fuel is being performed. During those times, the licensee will monitor the stack continuously. The hot cells are provided with two stages of HEPA filtration, before the effluents are released through the stack.

Continuous air samples are collected at the site boundaries by samplers which are nominally located at the four compass points. Other samples may be collected to ensure the plant operations are not adversely affecting the environment. The boundary air samples are compared to actions levels and if exceeded, appropriate investigative and corrective actions are taken.

4.0 Environmental Impacts of Proposed Action and Alternatives

4.1 Radiological Health Impacts

Daily monitoring of the LTC stack will not include any change in the type or form of special nuclear material (SNM) or any new or different operations from those currently authorized under BWXT's license. The impacts of normal operation of the site were evaluated in

the 1991 Environmental Assessment (EA) for the Renewal of the NRC license for BWXT, and accident scenarios were evaluated in the BWXT Emergency Plan. The total effective dose equivalent (TEDE) for members of the public from the normal operations at the BWXT site was calculated to be 0.024 mrem per year.

Since the proposed amendment will not result in changes in the types or increases in the amounts of any effluents released, the dose to the worker and the public will remain the same if the amendment is approved.

4.2 Water Resources and Biota

Monitoring the LTC air effluents daily, as opposed to continuously, will have no impact on water resources or biota. Effluent amounts will not be increased and there will be no change in the composition of material released.

4.3 Geology and Seismology

Monitoring the LTC air effluents daily will have no impact on geology or seismology.

4.4 Soils

Soils will not be impacted as a result of monitoring the LTC air effluents daily. There will be no new construction, no physical disturbance of soils, and there will not be any releases of process materials to soils as a result of this amendment application.

4.5 Air Quality

The NRC staff has determined that the proposed amendment will have minimal impact on air quality. As discussed above, daily monitoring will be used to maintain radiological airborne releases within NRC limits.

4.6 Demography, Cultural and Historic Resources

The NRC staff has determined that the proposed amendment will not impact demography, or cultural or historic resources. A full description of these parameters is given in the 1991 Environmental Assessment for Renewal.

4.7 Impacts Due to Accident Conditions

In accordance with 10 CFR 70.61, BWXT is required to limit the risk of each credible high or intermediate consequence event through the application of engineered and/or administrative controls. Also nuclear criticality events must be limited through assurance that all processes are maintained at subcritical levels.

The impacts due to the worst-case accident conditions were evaluated for the hot cells. The worst-case scenario is described in Chapter 5 of the BWXT Emergency Plan. The scenario involves the ignition of zircaloy grindings, resulting in a release of plutonium through the stack. This accident would result in a possible exposure to the public of less than one millionth of a maximum allowable lung burden for plutonium. Thus, off-site exposure due to the worst-case accident in the hot cells is negligible.

4.8 Cumulative Impacts

The NRC has found no other activities in the areas that could result in cumulative impacts.

4.9 Alternatives

The action that the NRC is considering is approval of an amendment request to Materials License SNM–42 issued pursuant to 10 CFR Part 70. The alternatives available to the NRC are:

1. Approve the license amendment request as submitted;
2. Approve the license amendment request with restrictions; or
3. Deny the amendment request.

Based on its review, the NRC staff has concluded that the environmental impacts associated with the proposed action are insignificant. Thus, the staff considers that Alternative 1 is the appropriate alternative for selection.

5.0 Agencies and Persons Contacted

The NRC contacted the Director of Radiological Health at the Virginia Department of Health (VDH) August, 2002 concerning this request. There were no comments, concerns or objections from the state.

Because the proposed action is entirely within existing facilities, and does not involve new or increased effluents or accident scenarios, the NRC has concluded that there is no potential to affect endangered species or historic resources, and therefore consultation with the State Historic Preservation Society and the U.S. Fish and Wildlife Service was not performed.

6.0 References

U.S. Nuclear Regulatory Commission (NRC), August 1991, ''Environmental Assessment for Renewal of Special Nuclear Material License SNM–42.''

BWX Technologies, July 16, 2002, Letter from Carl Yates to Director of Office of Nuclear Materials Safety and Safeguards, Amendment of License SNM–42.

BWX Technologies, November 28, 2001, ''Mt. Athos Site Emergency Plan'.

7.0 Conclusions

Based on an evaluation of the environmental impacts of the amendment request, the NRC has determined that the proper action is to issue a FONSI in the **Federal Register**. The NRC staff considered the environmental consequences of amending NRC Special Nuclear Materials License SNM–42 to change the frequency of monitoring the stack from continuously to daily and have determined that the approval of the request will have no significant effect on public health and safety or the environment.

8.0 Finding of No Significant Impact

On the basis of this EA, the NRC has concluded that the environmental impacts associated with the proposed action would not be significant and do not warrant the preparation of an Environmental Impact Statement. Accordingly, the NRC is making a Finding of No Significant Impact.

In accordance with 10 CFR 2.790 of the NRC's ''Rules of Practice,'' the Environmental Assessment and the documents related to this proposed action will be available electronically for public inspection from the Publicly Available Records (PARS) component of NRC's document system (ADAMS). ADAMS is accessible from the NRC Web site at *http://www.nrc.gov/reading-rm/adams.html* (the Public Electronic Reading Room).

The NRC contact for this licensing action is Edwin Flack, who may be contacted at (301) 415–8115 or by e-mail at *edf@nrc.gov* for more information about the licensing action.

Dated at Rockville, Maryland, this 25th day of September, 2002.

For the Nuclear Regulatory Commission.

Daniel M. Gillen,

Chief, Fuel Cycle Facilities Branch, Division of Fuel Cycle Safety and Safeguards, Office of Nuclear Material Safety and Safeguards.

[FR Doc. 02–25084 Filed 10–1–02; 8:45 am]

BILLING CODE 7590–01–P

NUCLEAR REGULATORY COMMISSION

Announcement of Public Workshop on License Renewal Continuing Guidance Development

AGENCY: Nuclear Regulatory Commission.

ACTION: Notice of public workshop.

SUMMARY: The United States Nuclear Regulatory Commission (NRC) will hold a public workshop on implementation of Title 10 of the Code of Federal Regulations, (10 CFR) part 54, ''Requirements for Renewal of Operating Licenses for Nuclear Power Plants'' (the

license renewal rule) and Part 51 (environmental issues). The purpose of the workshop is to exchange information between applicant, the NRC staff reviewers, and other stakeholders that will lead to enhancing the license renewal application (LRA) in a manner that provides the most efficient review by the NRC staff and enhances public confidence. The workshop is intended to allow for an open exchange between the stakeholders. It will provide an opportunity to discuss lessons learned in the license renewal process. On day one, part 54 is discussed, and on the second day, part 51 is discussed.

The NRC staff will consider the comments received from the workshop participants to improve the license renewal guidance documents NUREG–1800, ''Standard Review Plan for Review of License Renewal Applications for Nuclear Power Plants'', NUREG 1801, ''Generic Aging Lessons Learned (GALL) report,'' and Regulatory Guide (RG) 1.188 ''Standard Format and Content for Applications to Renew Nuclear Power Plant Operating Licenses.'' NEI will consider the comments to improve NEI 95–10, ''Industry Guideline for Implementing the Requirements of 10 CFR part 54—The License Renewal Rule,'' as appropriate.

The workshop will be conducted in a roundtable format to allow for interaction between presenters and attendees. This is a Category 3 Meeting. The public is invited to participate in this meeting by providing comments and asking questions throughout the meeting.

DATES: October 22, 2002, 9 a.m. to 4 p.m.; October 23, 2002, 9 a.m. to 12 noon.

ADDRESSES: U.S. Nuclear Regulatory Commission, Two White Flint North, 11545 Rockville Pike, Auditorium, Rockville, Maryland.

For further information contact: Raj Anand, Mail Stop O–12D3, Office of Nuclear Reactor Regulation, U.S. Nuclear Regulatory Commission, Washington, DC, 20555–0001, Telephone: 301–415–1146; Fax: 301–415–2279, e-mail: *rka@nrc.gov.*

Agenda

Tuesday, October 22, 2002

8:30 a.m: Registration—TWFN Auditorium

9 a.m. to 4 p.m.

- Opening remarks by NRC
- Opening remarks by NEI
- Purpose and format of the workshop
- License renewal application format Industry proposal Class of 2003 applications
  - Tables consistent with generic aging lessons learned (GALL) report, not consistent with GALL, links, columns, number of subgroups, order of table data, table headings
  - Lessons learned from LRA submittals, request for additional information (RAI), acceptable GALL deviations
  - Staff-applicant interface
  - Document revisions GALL, Standard Review Plan (SRP), NEI 95–10
  - —Short term
  - —Long term
  - Round table discussion
  - Path going forward
- Interim staff guidance
  - —Current status
  - —Interim guidance use during application review
  - —Looking ahead

Lunch

- Format and content of time-limited aging analyses (TLAA)
- Generic guidance
  - —Electrical cable programs
  - —Environmentally assisted fatigue
  - —Criterion 54.4(a)(2) for scoping
  - —System realignment
- On-site inspections lessons learned, scoping, regional inspections, project manager-applicant interface
- Summary and follow-up actions

Wednesday, October 23, 2002

9 a.m. to Noon

- Opening remarks by NRC
- Opening remarks by NEI
- Purpose and format of the workshop
- Environmental reviews
- Format and content of public meetings
- Generic issues of public interest
  - —Radiological
  - —Endangered species
  - —Alternatives
  - —Severe accident mitigation alternative (SAMA) evaluation
  - —Lessons learned
  - —Poster session, lessons learned
- Summary and follow-up actions

Dated at Rockville, Maryland, this 25th day of September 2002.

For the Nuclear Regulatory Commission.

Pao-Tsin Kuo,

Program Director, License Renewal and Environmental Impacts Division of Regulatory Improvement Programs, Office of Nuclear Reactor Regulation.

[FR Doc. 02–25085 Filed 10–1–02; 8:45 am]

BILLING CODE 7590–01–P

NUCLEAR REGULATORY COMMISSION

[Docket No. 70–3103

Louisiana Energy Services Gas Centrifuge Enrichment Facility

AGENCY: Nuclear Regulatory Commission.

ACTION: Opportunity to provide public comments.

SUMMARY: The U.S. Nuclear Regulatory Commission (NRC) is requesting comments from members of the public concerning a series of ''white papers'' presented to the NRC by the Louisiana Energy Services addressing licensing issues for a gas centrifuge uranium enrichment facility to be located in the area of Hartsville, Tennessee. The Commission will consider comments received in response to this notice in developing its position on the issues raised in these ''white papers.''

DATES: Comments are due by (30 days). Comments received after this date will be considered if it is practical to do so, but the NRC is able to ensure consideration only for comments received on or before this date.

FOR FURTHER INFORMATION CONTACT: Mr. Timothy C. Johnson, Project Manager, Special Projects and Inspection Branch, Division of Fuel Cycle Safety and Safeguards, Office of Nuclear Material Safety and Safeguards, U.S. Nuclear Regulatory Commission, Mail Stop T–8A33, Washington, DC 20555. Telephone (301) 415–7299, e-mail *TCJ@nrc.gov.*

SUPPLEMENTARY INFORMATION: On December 17, 2001, Louisiana Energy Services (LES) notified the NRC of its intention to apply for a license to construct and operate a gas centrifuge enrichment facility in the United States. Subsequently, LES and the NRC staff have met in several public meetings to discuss pre-application issues. LES currently intends to submit its application in December 2002. By letter dated April 24, 2002, LES presented six pre-application policy issues ''white papers'' to the NRC. LES submitted these white papers to the Commission as LES believes that Commission direction on these issues will be essential to the conduct of an efficient regulatory review process. The white papers addressed the following subjects:

1. Analysis of need for the facility and the no-action alternative under the National Environmental Policy Act
2. Environmental justice
3. Financial qualifications
4. Antitrust review
5. Foreign ownership

6. Disposition of depleted uranium tails

A public meeting was held on April 30, 2002, to discuss these papers. Comments on the papers were submitted by two attendees at the meeting: the Department of Energy and the United States Enrichment Corporation. The NRC prepared a meeting summary, dated May 28, 2002, which is publicly available. At the time of the April meeting, LES had not chosen a site for the facility.

On September 9, 2002, LES notified the NRC that it had selected a site in Hartsville, Tennessee, where the Tennessee Valley Authority had planned at one time to build a nuclear power plant. By letter dated, September 11, 2002, the Nuclear Information and Resource Service requested an opportunity to submit comments. Now, that a site has been chosen, the NRC is providing a 30 day public comment period on the issues proposed by LES.

The April 24, 2002, LES ''white papers;'' the May 28, 2002, NRC Meeting Summary; DOE's July 25, 2002, comments; and USEC's June 19, 2002, comments are accessible electronically from the NRC Agency wide Documents Access and Management System (ADAMS) Public Electronic Reading Room on the internet at the NRC Web site, *http://www.nrc.gov/reading-rm/adams.html.* The ADAMS Accession Numbers for these documents are: ML022350051, ML021480298, ML022350130, and ML021770197 respectively. These documents may also be examined and/or copied for a fee at NRC's Public Document Room located at One White Flint North, 11555 Rockville Pike (first floor), Rockville, Maryland.

Members of the public may provide comments on the subject application within 30 days of the publication of this notice in the **Federal Register**. The comments may be provided to Micheal Lesar, Chief, Rules Review and Directives Branch, Division of Administration Services, Office of Administration, U.S. Nuclear Regulatory Commission, Washington DC 20555.

Dated at Rockville, Maryland, this 26th day September, 2002.

For the U.S. Nuclear Regulatory Commission.

Melvyn N. Leach,

Chief, Special Projects and Inspection Branch, Division of Fuel Cycle Safety and Safeguards, Office of Nuclear Material Safety and Safeguards.

[FR Doc. 02–25081 Filed 10–1–02; 8:45 am]

BILLING CODE 7590–01–P

RAILROAD RETIREMENT BOARD

Agency Forms Submitted for OMB Review

SUMMARY: In accordance with the Paperwork Reduction Act of 1995 (44 U.S.C. Chapter 35), the Railroad Retirement Board (RRB) has submitted the following proposal(s) for the collection of information to the Office of Management and Budget for review and approval.

Summary of Proposal(s)

(1) *Collection title:* Request for review of Part B Medicare Claim.

(2) *Form(s) submitted:* G–790, G–791.

(3) *OMB Number:* 3220–0100.

(4) *Expiration date of current OMB clearance:* 11/30/2002.

(5) *Type of request:* Extension of a currently approved collection.

(6) *Respondents:* Individuals or Households.

(7) *Estimated annual number of respondents:* 4,000.

(8) *Total annual responses:* 4,100.

(9) *Total annual reporting hours:* 1,025.

(10) *Collection description:* The Railroad Retirement Board administers the Medicare program for persons covered by the railroad retirement system. The request provides the means for obtaining review by Palmetto GBA on claims for Part B Medicare benefits.

ADDITIONAL INFORMATION OR COMMENTS: Copies of the forms and supporting documents can be obtained from Chuck Mierzwa, the agency clearance officer (312–751–3363).

Comments regarding the information collection should be addressed to Ronald J. Hodapp, Railroad Retirement Board, 844 North Rush Street, Chicago, Illinois, 60611–2092 and to the OMB Desk Officer for the RRB, at the Office of Management and Budget, Room 10230, New Executive Office Building, Washington, DC 20503.

Chuck Mierzwa,

Clearance Officer.

[FR Doc. 02–24976 Filed 10–1–02; 8:45 am]

BILLING CODE 7905–01–M

SECURITIES AND EXCHANGE COMMISSION

[Release No. IC–25758]

Notice of Applications for Deregistration Under Section 8(f) of the Investment Company Act of 1940

September 26, 2002.

The following is a notice of applications for deregistration under section 8(f) of the Investment Company Act of 1940 for the month of September, 2002. A copy of each application may be obtained for a fee at the SEC's Public Reference Branch, 450 Fifth St., NW., Washington, DC 20549–0102 (tel. 202–942–8090). An order granting each application will be issued unless the SEC orders a hearing. Interested persons may request a hearing on any application by writing to the SEC's Secretary at the address below and serving the relevant applicant with a copy of the request, personally or by mail. Hearing requests should be received by the SEC by 5:30 p.m. on October 21, 2002, and should be accompanied by proof of service on the applicant, in the form of an affidavit or, for lawyers, a certificate of service. Hearing requests should state the nature of the writer's interest, the reason for the request, and the issues contested. Persons who wish to be notified of a hearing may request notification by writing to the Secretary, SEC, 450 Fifth Street, NW., Washington, DC 20549–0609. **FOR FURTHER INFORMATION CONTACT:** Diane L. Titus at (202) 942–0564, SEC, Division of Investment Management, Office of Investment Company Regulation, 450 Fifth Street, NW., Washington, DC 20549–0506.

ABN AMRO Funds [File No. 811–7244]

Summary: Applicant seeks an order declaring that it has ceased to be an investment company. On September 21, 2001 and September 26, 2001, applicant transferred its assets to ABN AMRO Funds (formerly known as Alleghany Funds), based on net asset value. Expenses of $140,000 incurred in connection with the reorganization were paid by ABN AMRO Asset Management (USA) LLC, applicant's investment adviser, and/or its affiliates.

Filing Date: The application was filed on September 17, 2002.

Applicant's Address: c/o PFPC Inc., 101 Federal St., Boston, MA 02110.

Principal High Yield Fund, Inc. [File No. 811–5174]

Summary: Applicant seeks an order declaring that it has ceased to be an investment company. On July 31, 2002, applicant transferred its assets to Principal Bond Fund, Inc., based on net asset value. Expenses of $67,399 incurred in connection with the reorganization were paid by applicant's investment adviser, Principal Management Corporation.

Filing Date: The application was filed on September 19, 2002.

Applicant's Address: 711 High St., Des Moines, IA 50392–0200.

Current Income Shares, Inc. [File No. 811–2357]

Summary: Applicant, a closed-end investment company, seeks an order declaring that it has ceased to be an investment company. On April 22, 2002, applicant transferred its assets to HighMark Bond Fund, a series of HighMark Funds, based on net asset value. Expenses of $291,400 incurred in connection with the reorganization were paid by applicant, HighMark Capital Management, Inc., applicant's investment adviser, and SEI Investments, HighMark Funds' administrator.

Filing Date: The application was filed on September 17, 2002.

Applicant's Address: 445 South Figueroa St., Suite 306, Los Angeles, CA 90071.

Putnam Asia Pacific Growth Fund [File No. 811–6202]

Summary: Applicant seeks an order declaring that it has ceased to be an investment company. On August 19, 2002, applicant transferred its assets to Putnam International Growth Fund, based on net asset value. Expenses of $565,744 incurred in connection with the reorganization were paid by applicant, the acquiring fund and Putnam Investment Management, LLC, applicant's investment adviser.

Filing Date: The application was filed on September 13, 2002.

Applicant's Address: One Post Office Square, Boston, MA 02109.

Putnam Strategic Income Fund [File No. 811–7221]

Summary: Applicant seeks an order declaring that it has ceased to be an investment company. On June 24, 2002, applicant transferred its assets to Putnam Diversified Income Trust, based on net asset value. Expenses of $77,800 incurred in connection with the reorganization were paid by applicant and the acquiring fund.

Filing Date: The application was filed on August 28, 2002.

Applicant's Address: One Post Office Square, Boston, MA 02109.

Intermediate Tax Free Portfolio [File No. 811–6700]

Summary: Applicant seeks an order declaring that it has ceased to be an investment company. On August 25, 2000, applicant transferred its assets to Municipal Bond Fund, based on net asset value. Expenses of $105,875 incurred in connection with the reorganization were paid by applicant and the acquiring fund.

Filing Date: The application was filed on September 3, 2002.

Applicant's Address: One South Street, Baltimore, MD 21202.

Alliance Money Market Fund [File No. 811–8838]

Summary: Applicant seeks an order declaring that it has ceased to be an investment company. By July 29, 2002, all shareholders of applicant had voluntarily redeemed their shares at net asset value. Applicant incurred no expenses in connection with the liquidation.

Filing Dates: The application was filed on August 7, 2002, and amended on September 13, 2002.

Applicant's Address: 1345 Avenue of the Americas, New York, NY 10105.

Variable Investors Series Trust [File No. 811–4969]

Summary: Applicant seeks an order declaring that it has ceased to be an investment company. On December 28, 2001, applicant made a liquidating distribution to its shareholders based on net asset value. Expenses of $55,675 incurred in connection with the liquidation were paid by First Variable Life Insurance Company, the parent of applicant's investment advisor.

Filing Date: The application was filed on August 30, 2002.

Applicant's Address: 2801 Highway 280 South, Birmingham, AL 35223.

For the Commission, by the Division of Investment Management, pursuant to delegated authority.

Margaret H. McFarland,

Deputy Secretary.

[FR Doc. 02–25005 Filed 10–1–02; 8:45 am]

BILLING CODE 8010–01–Py

SECURITIES AND EXCHANGE COMMISSION

[Release No. 34–46546; File No. SR–CBOE–2002–48]

Self-Regulatory Organizations; Notice of Filing of Proposed Rule Change by the Chicago Board Options Exchange, Incorporated Relating to Amendments to Its Constitution and Rules Pertaining to the Governance of the Exchange

September 24, 2002.

Pursuant to Section 19(b)(1) of the Securities Exchange Act of 1934 (''Act'')[1] and Rule 19b–4 thereunder,[2] notice is hereby given that on August 26, 2002, the Chicago Board Options Exchange, Incorporated (''CBOE'' or ''Exchange'') filed with the Securities and Exchange Commission (''SEC'' or ''Commission'') the proposed rule change as described in Items I, II, and III below, which Items have been prepared by the CBOE. The Commission is publishing this notice to solicit comments on the proposed rule change from interested persons.

I. Self-Regulatory Organization's Statement of the Terms of Substance of the Proposed Rule Change

The CBOE proposes to amend provisions of its Constitution and Rules pertaining to the governance of the Exchange. Below is the text of the proposed rule change. Proposed new language is *italicized,* proposed deletions are bracketed.

* * * * *

Chicago Board Options Exchange, Incorporated

Proposed Governance Amendments to CBOE Constitution and Rules

Constitution

Article I

Definitions

No change.

Article II

Membership

No change.

Article III

Meetings of Members

Sections 3.1–3.3 No change.

Section 3.4 Special Meetings

Special meetings of members, for any purpose or purposes, unless otherwise prescribed by statute or by the Certificate of Incorporation, may be called by the Chairman of the Board, the *Vice* Chairman of the *Board*[Executive Committee] or the Board of Directors, and shall be called by the Secretary at the request in writing of 150 voting members, provided that such request shall state the purpose or purposes of the proposed meeting and the day and hour at which such meeting shall be held.

Sections 3.5–3.7 No change.

Article IV

Nominations

Section 4.1 Nominating Committee

(a) There shall be a Nominating Committee composed of four members who are primarily engaged in business on the floor of the Exchange in the capacity of a member (floor members) [(except that, as provided in paragraph (b) of this Section 4.1, the Nominating Committee shall have six floor members until the 1999 annual election meeting

[1] 15 U.S.C. 78s(b)(1).

[2] 17 CFR 240.19b–4.

and shall have five floor members until the 2000 annual election meeting)]; two members who are officers of member organizations that primarily conduct a non-member public customer business (firm members); two members each of whom directly or indirectly owns and controls (as defined in Section 6.1(a)) one or more memberships in respect of which he acts solely as lessor (lessor members), at least one of whom is not actively engaged in business as a ''broker-dealer'' or as a ''person associated with a broker-dealer'' as those terms are defined in the Securities Exchange Act of 1934; and two representatives of the public (public members).

(b) All of the members of the Nominating Committee shall be elected by the voting members of the Exchange. [Members of the Nominating Committee elected prior to the 1999 annual election meeting shall continue to serve until the expiration of the terms for which they were elected. The Nominating Committee to serve in respect of the 1999 annual election meeting shall also include two firm members, two lessor members and two public members, all of whom shall be appointed by the Chairman of the Executive Committee with the approval of the Board of Directors.] In the 1999 annual election meeting, one floor member shall be elected for a three year term, and two firm members, two lessor members and two public members shall be elected, one firm member, one lessor member and one public member for terms expiring at the second annual election meeting following the 1999 annual election meeting, and one firm member, one lessor member and one public member for terms expiring at the third annual election meeting following the 1999 annual election meeting. In the 2000 annual election meeting, one floor member shall be elected for a three year term. At each subsequent annual election meeting, members of the Nominating Committee shall be elected to succeed those whose terms expire, each to serve for a term expiring at the third succeeding annual election meeting and until their successors are duly elected and qualified. Elected members of the Nominating Committee shall be ineligible for reelection for a period of three years after their terms expire.

Section 4.2 Nominating Committee Vacancies

Any vacancy occurring among the members of the Nominating Committee may be filled by a qualified person appointed by the *Vice* Chairman of the *Board* [Executive Committee] with the approval of the Board to hold office until the next annual election meeting, at which time a qualified successor shall be elected to serve the unexpired term, if any, of his predecessor in office.

Sections 4.3–4.7 No change.

Article V

Conduct of Annual Election

Section 5.1 Election Committee

The *Vice* Chairman of the *Board* [Executive Committee], with the approval of the Board, shall appoint not less than three tellers, none of whom may be a member of the Exchange or a partner or officer of a member organization, who shall constitute a Committee to conduct the annual election. The Committee shall have authority to decide all questions pertaining to the conduct of the annual election, and its decision shall be final.

Sections 5.2–5.3 No change.

Article VI

Board of Directors

Section 6.1 Number, Election and Term of Office of Directors

(a) The Board of Directors shall consist of 22 directors as described below and the Chairman of the Board, who by virtue of his office shall be a member of the Board. [Commencing with the 1999 annual election meeting, t]*T*he Directors elected by the membership shall be divided into three classes *which, commencing with the 2002 annual election meeting, shall be* composed as follows:[3]

Class I shall consist of one member who directly or indirectly owns and controls a membership and is primarily engaged in business on the floor of the Exchange in the capacity of a member (floor director), [one member who functions as a member in any recognized capacity either individually or on behalf of a member organization (at-large director),] one member who directly or indirectly owns and controls a membership with respect to which he acts solely as lessor and who is not actively engaged in business as a ''broker-dealer'' or as a ''person associated with a broker-dealer'' as those terms are defined in the Securities Exchange Act of 1934, (lessor director), [two members who are executive officers of member organizations that primarily conduct a non-member public customer business and are not individually engaged in business on the Exchange floor (off-floor directors),] and [two] *three* non-members who are not broker-dealers or persons affiliated with broker-dealers (public directors).

Class II shall consist of one floor director, one *member who functions as a member in any recognized capacity either individually or on behalf of a member organization (*at-large director*),* two *members who are executive officers of member organizations that primarily conduct a non-member public customer business and are not individually engaged in business on the Exchange floor (*off-floor directors*)* and [three] *four* public directors.

Class III shall consist of two floor directors, one at-large director, two off-floor directors and [three]*four* public directors.

The ordinary place of business of at least one of the two off-floor directors in each Class shall be a location more than 80 miles from the Exchange's trading floor. For purposes of this Section 6.1, a member shall be considered to directly own and control a membership only if the member individually and directly owns of record and beneficially all right, title and interest in the membership, and a member shall be considered to indirectly own and control a membership only if the member (A) has the sole and exclusive right to vote the membership and control its sale, and (B) is in possession of and subject to all of the risks and rewards of a direct owner of at least a fifty percent (50%) interest in a membership, either through ownership of an equity interest in a member organization or of a beneficial interest in a trust, which in either case is the owner of one or more memberships as permitted under the Rules.

(b) The [initial] terms of Class I, Class II and Class III directors shall terminate following the annual election meetings to be held in [1999] *2002,* [2000] *2003* and [2001] *2004*, respectively[, and members of the Board prior to the annual election meeting to be held in 1999 shall be assigned to one of these three Classes on the basis of the year in which their current term of office expires].

[3] *Prior to the 2002 annual election meeting, the three classes of Directors elected by the membership are composed as follows: Class I: one floor director, one-at-large director, one lessor director, two off-floor directors, and two public directors; Class II: one floor director, one at-large director, two off-floor directors, and three public directors; Class III: two floor directors, one at-large director, two off-floor directors, and three public directors.*

[4 Any member serving as a floor director prior to the 1999 annual election meeting shall be permitted to serve out the remainder of his current term of office without regard to whether his business on the floor is conducted ''in the capacity of a member.'']

the directors of each class shall be elected for three year terms to succeed those whose terms are then about to expire, and they shall hold office for the terms for which elected and until their successors shall have been duly elected and qualified, or until their earlier death, resignation or removal. Terms of office of directors shall expire at the first regular meeting of the Board of Directors held on or after January 1 following the annual election meetings at which their successors are elected.

Sections 6.2–6.6 No change.

Section 6.7 Special Meetings

Special meetings of the Board may be called by the Chairman of the Board or the *Vice* Chairman of the *Board* [Executive Committee] and shall be called by the Secretary upon the written request of any 4 Directors. The Secretary shall give at least one hour's notice of such meeting to each Director, either by announcement on the Exchange floor during trading hours on business days, or personally, or by mail, telegram or cablegram. Every such notice shall state the time and place of the meeting which shall be fixed by the person calling the meeting, but need not state the purpose thereof except as otherwise required by statute, the Constitution or the Rules.

Sections 6.8–6.11 No change.

Article VII

Committees

Section 7.1 Designation of Committees

The committees of the Exchange shall consist of an Executive Committee*, an Audit Committee, a Compensation Committee, a Floor Directors Committee,* and such other standing and special committees as may be provided in the Constitution or Rules or as may be from time to time appointed by the *Vice* Chairman of the *Board*[Executive Committee] with the approval of the Board. Except as may be otherwise provided in the Constitution or the Rules, the *Vice* Chairman of the *Board*[Executive Committee] with the approval of the Board shall appoint the members of all committees and may designate a Chairman and a Vice-Chairman thereof [other than the Chairman of the Executive Committee, who shall be selected as provided in Section 8.1(a) of the Constitution].

Section 7.2 The Executive Committee

The Executive Committee shall consist of the Chairman of the Board, the *Vice* Chairman of the *Board*[Executive Committee], and at least 4 other persons *appointed as provided in Section 7.1, each of whom must be a Director. Not less than 50% of the members of the Executive Committee (excluding the Chairman) shall be public directors. Members of the Executive Committee shall not be subject to removal except by the Board. The Chairman of the Board shall be the Chairman of the Executive Committee.* Each member of this Committee shall be a voting member. The members of the Executive Committee shall serve for a term of one year expiring at the first regular meeting of Directors following the annual election meeting in each year. The Executive Committee shall have and may exercise all the powers and authority of the Board in the management of the business and affairs of the Exchange, except it shall not have the power or authority of the Board in reference to amending the Certificate of Incorporation, adopting an agreement of merger or consolidation, recommending to the members the sale, lease or exchange of all or substantially all of the Exchange's property and assets, recommending to the members the dissolution of the Exchange or a revocation of a dissolution, or amending the Constitution or Rules of the Exchange.

Section 7.3 The Audit Committee

The Audit Committee shall consist of at least three Directors appointed by the Chairman of the Board with the approval of the Board, the exact number to be determined from time to time by the Board. Not less than 50% of the members of the Audit Committee shall be public directors. Members of the Audit Committee shall not be subject to removal except by the Board. The Chairman of the Audit Committee shall be a public director appointed by the Chairman of the Board. The Audit Committee shall have such duties and may exercise such authority as may be prescribed in the Constitution or Rules or by resolution of the Board.

Section 7.4 The Compensation Committee

The Compensation Committee shall consist of the Vice Chairman of the Board, the lessor director, the Chairman of the Financial Planning Committee, one or more off-floor directors, and such number of public directors that will constitute at least 50% of the members of the Committee. The off-floor director(s) and the public directors shall be appointed to the Compensation Committee by the Chairman of the Board with the approval of the Board. Members of the Compensation Committee shall not be subject to removal except by the Board. The Chairman of the Compensation Committee shall be a public director appointed by the Chairman of the Board. The Compensation Committee shall have such duties and may exercise such authority as may be prescribed in the Constitution or Rules or by resolution of the Board.

Section 7.5 The Floor Directors Committee

The Floor Directors Committee shall consist of those Directors who are primarily engaged in business on the floor of the Exchange (whether serving as floor directors or at-large directors), the lessor director as a non-voting member of the Committee, and such other persons as may be appointed as voting or nonvoting members of the Committee by the Vice Chairman of the Board with the approval of the Board. The Vice Chairman of the Board shall be the Chairman of the Floor Directors Committee. The Floor Directors Committee shall have such duties and may exercise such authority as may be prescribed in the Constitution or Rules or by resolution of the Board.

Section 7.[3]*6* Other

All other committees shall have such duties and may exercise such authority as may be prescribed for them in the Constitution or Rules or by resolution of the Board.

Section 7.[4]*7* Conduct of Proceedings

Except as otherwise provided in the Certificate of Incorporation, Constitution or Rules, or by resolution of the Board, each committee may determine the manner in which its proceedings shall be conducted. Committees shall keep minutes of their meetings and periodically report their proceedings to the Board of Directors.

Article VIII

Officers

Section 8.1 Designation; Number; Election

(a) The officers of the Exchange shall be a Chairman of the Board, a *Vice* Chairman of the *Board*[Executive Committee], a President, one or more Vice-Presidents (the number thereof to be determined by the Board of Directors), a Secretary, a Treasurer, and such other officers as the Board may determine. The Chairman of the Board shall be elected by the affirmative vote of at least two-thirds of the Directors then in office exclusive of the Chairman, who shall not vote. Such affirmative vote may also prescribe his duties not inconsistent with the Constitution or Rules and may prescribe a tenure of office.

The *Vice* Chairman of the *Board*[Executive Committee] shall be a director who owns or directly controls his own membership and is primarily engaged in business on the floor of the Exchange in the capacity of a member. He shall be elected by a plurality of members voting at a meeting of the membership held on the 3rd Friday in December of each year (or if that day is not a business day, on the next succeeding business day) and shall serve until his successor is duly chosen and qualified or until his earlier death or his resignation or removal. Once a director has held the office of the *Vice* Chairman of the *Board*[Executive Committee] for six months or more of a one-year term and for the next two succeeding one-year terms, the director shall thereafter be ineligible to again hold the office until a period of not less than six months has elapsed during which the director has not held that office. Candidates for the office of *Vice* Chairman of the *Board*[Executive Committee] must notify the Secretary of the Exchange in writing no later than the close of business on November 23rd (or if that day is not a business day, on the next succeeding business day). In the event there is only one candidate, no election need be held, and the Board of Directors shall declare the office filled by the sole announced candidate.

The remaining officers of the Exchange shall be appointed by the Chairman of the Board, subject to the approval of the Board, at the first regular meeting of the Board of Directors held on or after January 1 following each annual election meeting, each to serve until a successor has been duly chosen and qualified or until the officer's earlier death or resignation or removal.

(b) No officer, other than the *Vice* Chairman of the *Board*[Executive Committee], shall be a member or affiliated with a member or a broker or a dealer in securities or commodities. Two or more offices may be held by the same person, except the offices of Chairman of the Board and President, Chairman of the Board and Secretary, or President and Secretary may not be held by the same person. The compensation of all officers of the Exchange chosen by the Board shall be fixed by the Board.

Section 8.2 No change.

Section 8.3 [Chairman of the Executive Committee/]Vice Chairman of the Board

The *Vice* Chairman [of the Executive Committee (who is also *Vice*-Chairman] of the *Board*[)] shall preside at meetings of the [Executive Committee and at meetings of the] members. Subject to the approval of the Board, the *Vice* Chairman of the *Board*[Executive Committee] may appoint standing and special committees unless the method of appointment is otherwise provided for in the Constitution or Rules or in the resolution of the Board establishing the committee. The *Vice* Chairman of the *Board*[Executive Committee] shall be responsible for the coordination of the activities of all committees, *with the exception of committees of the Board, including the Executive Committee, the Audit Committee and the Compensation Committee. The Vice Chairman of the Board*[He] shall be an ex-officio member, without a right to vote, of all committees, without prejudice to being specifically appointed as a voting member of any committee. In the case of the absence or inability to act of the Chairman of the Board, or in case of a vacancy in the office of the Chairman of the Board, the *Vice* Chairman of the *Board*[Executive Committee] shall exercise the powers and discharge the duties of the Chairman of the Board.

Section 8.4 Acting Chairman

In the absence or inability to act of both the Chairman of the Board and the *Vice* Chairman of the *Board*[Executive Committee], the Board may designate an Acting Chairman of the Board. In the absence of such a designation by the Board, the President, or in his absence or inability to act, the senior available Vice-President, shall assume all the functions and discharge all the duties of the Chairman of the Board.

Section 8.5 Vacancy in Office of *Vice* Chairman of the *Board* [Executive Committee]

(a) If the *Vice* Chairman of the *Board*[Executive Committee] shall cease to satisfy the requirements for election to that office, he shall thereupon cease to hold his office and such office shall become vacant, provided that if his membership is suspended he may continue to hold office unless he is removed pursuant to paragraph (a) of Section 8.7.

(b) If a vacancy occurs in the office of *Vice* Chairman of the *Board*[Executive Committee] pursuant to paragraph (a) of this Section or if for any other reason the office becomes vacant, the Board, by the affirmative vote of a majority of the Directors then in office, shall fill such vacancy by the election to such office of a Director then in office who satisfies the requirements for election to such office.

Section 8.6 No change.

Section 8.7 Removals

(a) In the event of the refusal, failure, neglect or inability of the *Vice* Chairman of the *Board*[Executive Committee] to discharge his duties, or for any cause affecting the best interests of the Exchange, the sufficiency of which the Board of Directors shall be the sole judge, the Board shall have the power, by the affirmative vote of at least two-thirds of the Directors then in office exclusive of the *Vice* Chairman of the *Board*[Executive Committee], to remove the *Vice* Chairman of the *Board*[Executive Committee] and declare such office vacant.

(b) Any officer, other than the *Vice* Chairman of the *Board*[Executive Committee], chosen by the Board may be removed at any time by the Board whenever in its judgment the best interests of the Exchange would be served thereby; provided, that the Chairman of the Board or the President may be removed only by the affirmative vote of at least two-thirds of the Directors then in office exclusive of the Chairman of the Board, who shall not vote. Any such removal shall be without prejudice to the contract rights, if any, of the person so removed.

(c) Any vacancies occurring in any office of the Exchange at any time may be filled by the Board for the unexpired term.

Sections 8.8–8.10 No change.

Article IX

Indemnification

No change.

Article X

Notices

No change.

Article XI

General Provisions

Sections 11.1–11.3 No change.

Section 11.4 Officers and Employees Restricted

(a) Every salaried officer or employee of the Exchange, except the *Vice* Chairman of the *Board*[Executive Committee], and every salaried officer or employee of any corporation in which the Exchange owns the majority of the stock, shall report promptly to the Exchange every purchase or sale for his or her own account or the account of others of any security which is the underlying security of any option contract admitted to dealings on the Exchange.

(b) With the exception of the *Vice* Chairman of the *Board*[Executive Committee], no salaried officer or employee of the Exchange or salaried officer or employee of any corporation in which the Exchange owns the majority of the corporate stock may

purchase or sell for his or her own account or for the account of others any option contract which entitles the purchaser to purchase or sell any security described in paragraph (a) of this Section.

(c) Paragraphs (a) and (b) above of this Section shall not be construed to preclude any salaried officer or employee of the Exchange or of any corporation in which the Exchange owns a majority of the stock from performing his duties and responsibilities as assigned to him by such organization.

Article XII

Amendments

No change.

* * * * *

Rules

* * * * *

Chapter II—Organization and Administration

Part A—Committees

Committees of the Exchange

Rule 2.1. Committees of the Exchange

(a) Establishment of Committees. In addition to committees specifically provided for in the Constitution, there shall be the following committees: Appeals, Arbitration, Business Conduct, appropriate Floor Procedure Committees, Floor Officials, appropriate Market Performance Committees, Membership, Product Development and such other committees as may be established in accordance with the Constitution. *Except as may be otherwise provided in the Constitution or the Rules,* [T]*the Vice* Chairman of the *Board*[Executive Committee], with the approval of the Board, shall appoint the chairmen and members of such committees to serve for terms expiring at the regular meeting of the Board following the next succeeding Annual Election Meeting or until successors are appointed. Consideration shall be given to continuity and to having, where appropriate, a cross section of the membership represented on each committee. *Except as may be otherwise provided in the Constitution or the Rules,* [T]*the Vice* Chairman of the *Board*[Executive Committee] may, at any time, with or without cause, remove any member of such committees. Any vacancy occurring in one of these committees shall be filled by the *Vice* Chairman of the *Board*[Executive Committee] for the remainder of the term. Notwithstanding the foregoing, the Chairman of the Board, with the approval of the Board, shall appoint Directors to serve on the Audit and Compensation Committees, whose members shall not be subject to removal except by the Board. Whenever the *Vice* Chairman of the *Board*[Executive Committee] is, or has reason to believe he may become, a party to any proceeding of an Exchange committee, he shall not exercise his power to appoint or remove members of that committee, and the Chairman of the Board shall have such power.

(b)–(d) No change.

* * * * *

Chapter II—Organization and Administration

Part C—Dues, Fees and Other Charges

Liability for Payment

Rule 2.23. A member or associated person that does not pay any dues, fees, assessments, charges, fines or other amounts due to the Exchange within 30 days after the same has become payable shall be reported to the *Vice* Chairman of the *Board*[Executive Committee], who may, after giving reasonable notice to the member or associated person of such arrearages, suspend the member or associated person from membership and association with any member until payment is made. Should payment not be made by a member within 6 months after payment is due, any memberships owned by that member may be disposed of by the Exchange in accordance with Rule 3.14(b). A former member or associated person that does not pay any dues, fees, assessments, charges, fines or other amounts due to the Exchange within 30 days after the same has become payable shall be reported to the *Vice* Chairman of the *Board*[Executive Committee], who may, after giving reasonable notice to the former member or associated person of such arrearages, bar the former member or associated person from becoming a member and associated person until payment is made.

* * * Interpretations and Policies:

01. Reasonable notice under Rule 2.23 shall include, but is not limited to, service on a member or associated person's address as it appears on the books and records of the Exchange either by (1) hand delivery or (2) deposit in the United States post office, postage prepaid via registered or certified mail.

02. The Exchange shall report to the Central Registration Depository operated by the National Association of Securities Dealers, Inc. (''CRD'') any suspension or bar imposed pursuant to this Rule.

* * * * *

Chapter XVI

Summary Suspension by Chairman of the Board or

Vice Chairman of the *Board*[Executive Committee]

Imposition of Suspension

Rule 16.1. A member or person associated with a member who has been and is expelled or suspended from any self-regulatory organization or barred or suspended from being associated with a member of any self-regulatory organization, or a member which is in such financial or operating difficulty that the Chairman of the Board or *Vice* Chairman of the *Board*[Executive Committee] determines that the member cannot be permitted to continue to do business as a member with safety to investors, creditors, other members, or the Exchange, may be summarily suspended by the Chairman of the Board or *Vice* Chairman of the *Board*[Executive Committee]. In addition, the Chairman of the Board or *Vice* Chairman of the *Board*[Executive Committee] may limit or prohibit any person with respect to access to services offered by the Exchange if any of the criteria or the foregoing sentence is applicable to such person or, in the case of a person who is not a member, if the Chairman of the Board or *Vice* Chairman of the *Board*[Executive Committee] determines that such person does not meet the qualification requirements or other prerequisites for such access with safety to investors, creditors, members, or the Exchange. In the event a determination is made to take summary action, as described above, notice thereof will be sent to the Securities and Exchange Commission. Any person aggrieved by any summary action taken under this Rule shall be promptly afforded an opportunity for a hearing by the Exchange in accordance with the provisions of Chapter XIX. In addition, the Securities and Exchange Commission may on its own motion order or such a person may apply to the Securities and Exchange Commission for a stay of such summary action pending the results of a hearing pursuant to Chapter XIX.

* * * * *

Chapter XXX

Part A—Trading in Stocks, Warrants and Other Securities

Appendix A—Applicability of Rules of the Exchange

This Appendix lists the rules in Chapters I through XIX of the rules of the Exchange that apply to the trading of stock, warrants, and such other

securities instruments and contracts as may be traded subject to the rules in Chapter XXX. Where a rule in Chapter I through XIX is supplemented by a rule in Chapter XXX, that fact is so indicated.

Existing rule by	Supplemented
Chapter I–Chapter 15	No Change.
Chapter XVI	Summary Suspension by Chairman of the Board or *Vice* Cha.
Rule 16.1–Rule 16.5.	No Change.
Chapter XVII–Chapter XIX.	No Change.

II. Self-Regulatory Organization's Statement of the Purpose of, and Statutory Basis for, the Proposed Rule Change

In its filing with the Commission, the CBOE included statements concerning the purpose of and basis for the proposed rule change and discussed any comments it received on the proposed rule change. The text of these statements may be examined at the places specified in Item IV below. The CBOE has prepared summaries, set forth in Sections A, B, and C below, of the most significant aspects of such statements.

A. Self-Regulatory Organization's Statement of the Purpose of, and Statutory Basis for, the Proposed Rule Change

1. Purpose

The purpose of the proposed amendment is to make certain revisions to provisions of the Exchange's Constitution and Rules pertaining to the governance of the Exchange. The principal governance change proposed to be made is to increase the public representation on the Exchange's Board of Directors (''Board'') and three committees of the Board so that the Board and these three committees will be balanced between industry (member) and public directors. With respect to the Board, the Exchange proposes to amend Section 6.1 of the Constitution to maintain the current 23-person size of the Board, while increasing the number of public directors from 8 to 11. In order to accommodate the greater number of public directors, the Exchange proposes to reduce the number of off-floor member firm directors from 6 to 4, and to reduce the number of at-large member directors from 3 to 2. The number of floor member directors will remain unchanged at 4 directors, and the Board will continue to have one lessor member director. The Chairman of the Board will continue to serve as an *ex-officio* director. As a result, the Board will be equally balanced between 11 member directors and 11 public directors plus the Chairman. Directors will continue to be elected for three-year terms, with all categories of directors to be elected by the membership. As a matter of transition, the Exchange proposes to effect the changes with the 2002 annual election of directors.[5]

In addition to changing the composition of the Board, the Exchange proposes to modify the composition of the Executive Committee to make it reflect the same balance and composition as the Board as a whole. To accomplish this, the Exchange proposes to amend Section 7.2 of its Constitution to provide that not less than 50% of the members of the Executive Committee, excluding the Chairman of the Board, will be public directors. Members of the Executive Committee may be removed only by the Board. The Chairman of the Board and the Vice Chairman of the Board will continue to be *ex officio* members of the Executive Committee, with the Chairman of the Board serving as the Chairman of the Executive Committee in place of the Vice Chairman, who currently holds that position.

The Exchange also proposes to codify in the Constitution the establishment of the Audit Committee (Section 7.3), the Compensation Committee (Section 7.4) and the Floor Directors Committee (Section 7.5) as committees of the Board.

The Audit Committee will consist of at least 3 directors of which not less than 50% will be public directors. The members of the Audit Committee will be appointed by the Chairman of the Board, subject to Board approval, as is currently provided in Exchange Rule 2.1, and the Chairman of the Audit Committee will be a public director also appointed by the Chairman of the Board. Members of the Audit Committee may be removed only by the Board.

The Compensation Committee will consist of the Vice Chairman of the Board, the lessor director, the Chairman of the Exchange's Financial Planning Committee, one or more off-floor directors, and a number of public directors that will constitute at least 50% of the members of the Committee. The Chairman of the Compensation Committee will be a public director appointed by the Chairman of the Board with the approval of the Board, and the off-floor directors and the public directors on the Compensation Committee will also be appointed by the Chairman of the Board consistent with the Chairman's current authority under Rule 2.1. Members of the Compensation Committee may be removed only by the Board.

The Floor Directors Committee will consist of those directors who are primarily engaged in business on the floor of the Exchange, whether serving as floor directors or at-large directors, and will also include the lessor director as a non-voting member of the Committee. This represents no change from current practice. The Vice Chairman of the Board will be designated in the Constitution as the Chairman of this Committee. The Floor Directors Committee will continue to function as an advisory committee to the Board of Directors and to the Office of the Chairman.

It is also proposed to amend Section 8.3 of the Constitution, which describes the authority of the Vice Chairman of the Board, to make it clear that the authority of that officer to coordinate the activities of the committees of the Exchange does not extend to the Executive, Audit or Compensation Committees of the Board.

In addition to the foregoing proposed changes to the governance provisions of the Constitution, a few ''housekeeping'' amendments to the Constitution and rules are also proposed. Among these is the proposed deletion of outdated references to members of the Nominating Committee and floor directors who were elected prior to the 1999 annual election in Section 4.1 and in the note to Section 6.1(b) of the Constitution. In addition, because the offices of Chairman of the Executive Committee and Vice Chairman of the Board will no longer be held by the same person, it is proposed to amend a number of provisions in the Constitution and rules that refer to the Chairman of the Executive Committee to make them refer instead to the Vice Chairman of the Board so as not to change their intended meaning.

2. Statutory Basis

The CBOE believes that, by increasing the public representation on the Exchange's Board and three committees of the Board (the Executive, Audit and

[5] In 1999, the Exchange amended its Constitution to increase the public representation on its Board of Directors from 4 to 8 public directors, and also to create a lessor director category on the Board. To accommodate the greater number of public directors and the lessor director, the Exchange increased the total size of its Board from 21 to 23 directors, reduced the number of floor directors from 6 to 4, and provided that the President of the Exchange would no longer be an *ex-officio* director. To effectuate these governance changes, the number of off-floor member directors and at-large directors remained unchanged at 6 directors and 3 directors, respectively, and the Chairman continued to serve as an *ex-officio* director. *See* Securities Exchange Act Release No. 4206 (October 18, 1999), 64 FR 57499 (October 25, 1999).

Compensation Committees) such that the Board and these three committees are balanced between industry and public directors, and by requiring that the Chairman of the Audit Committee and the Compensation Committee be public directors, the proposed amendment to the Constitution furthers the objectives of Section 6(b)(3) of the Act[6] to assure fair representation of the members of the Exchange in the selection of its directors and in the administration of its affairs, and to provide that one or more members of the Board of Directors must be representatives of investors (*i.e.*, public directors). The CBOE also believes that the proposed amendment furthers the objectives of Section 6(b)(5) of the Act[7] to protect investors and the public interest.

B. Self-Regulatory Organization's Statement on Burden on Competition

The CBOE does not believe that the proposed rule change will impose any burden on competition not necessary or appropriate in furtherance of the purposes of the Act.

C. Self-Regulatory Organization's Statement on Comments on the Proposed Rule Change Received from Members, Participants or Others

No written comments were solicited or received with respect to the proposed rule change.

III. Date of Effectiveness of the Proposed Rule Change and Timing for Commission Action

Within 35 days of the date of publication of this notice in the **Federal Register** or within such longer period (i) as the Commission may designate up to 90 days of such date if it finds such longer period to be appropriate and publishes its reasons for so finding or (ii) as to which the Exchange consents, the Commission will:

(A) By order approve such proposed rule change, or

(B) Institute proceedings to determine whether the proposed rule change should be disapproved.

IV. Solicitation of Comments

Interested persons are invited to submit written data, views, and arguments concerning the foregoing, including whether the proposed rule change is consistent with the Act. Persons making written submissions should file six copies thereof with the Secretary, Securities and Exchange Commission, 450 Fifth Street, NW., Washington, DC 20549–0609. Copies of the submission, all subsequent amendments, all written statements with respect to the proposed rule change that are filed with the Commission, and all written communications relating to the proposed rule change between the Commission and any person, other than those that may be withheld from the public in accordance with the provisions of 5 U.S.C. 552, will be available for inspection and copying in the Commission's Public Reference Room. Copies of such filing will also be available for inspection and copying at the principal office of the CBOE.

All submissions should refer to File No. SR–CBOE–2002–48 and should be submitted by October 23, 2002.

For the Commission, by the Division of Market Regulation, pursuant to delegated authority.[8]

Margaret H. McFarland,

Deputy Secretary.

[FR Doc. 02–25008 Filed 10–1–02; 8:45 am]

BILLING CODE 8010–01–P

[6] 15 U.S.C. 78f(b)(3).

[7] 15 U.S.C. 78f(b)(5).

[8] 17 CFR 200.30–3(a)(12).

SECURITIES AND EXCHANGE COMMISSION

[Release No. 34–46556; File No. SR–CHX–2002–31]

Self-Regulatory Organizations; Notice of Filing of Proposed Rule Change by the Chicago Stock Exchange, Incorporated Relating To Execution of Limit Orders Following Exempted ITS Trade-Through

September 26, 2002.

Pursuant to Section 19(b)(1) of the Securities Exchange Act of 1934 (the ''Act''),[1] and Rule 19b–4 thereunder,[2] notice is hereby given that on September 20, 2002, the Chicago Stock Exchange, Incorporated (''CHX'' or ''Exchange'') filed with the Securities and Exchange Commission (the ''Commission'') the proposed rule change as described in Items I, II and III below, which Items have been substantively prepared by the Exchange. The Commission is publishing this notice to solicit comments on the proposed rule change from interested persons.

I. Self-Regulatory Organization's Statement of the Terms of Substance of the Proposed Rule Change

The Exchange proposes to amend certain provisions of CHX Article XX, Rule 37, which governs, among other things, execution of limit orders in a CHX specialist's book following a trade-through in the primary market. Specifically, the CHX seeks to render voluntary a CHX specialist's obligation to fill limit orders in the specialist's book following a primary market trade-through, if such trade-through constitutes an Exempted Trade-Through (as defined below). The text of the proposed rule change is available at the Commission and at the CHX.[3]

II. Self-Regulatory Organization's Statement of the Purpose of, and Statutory Basis for, the Proposed Rule Change

In its filing with the Commission, the CHX included statements concerning the purpose of and basis for the proposed rule change and discussed any comments it received regarding the proposal. The text of these statements may be examined at the places specified in Item IV below. The CHX has prepared summaries, set forth in Sections A, B and C below, of the most significant aspects of such statements.

A. Self-Regulatory Organization's Statement of the Purpose of, and Statutory Basis for, the Proposed Rule Change

1. Purpose

On August 28, 2002, the Commission issued an order granting a *de minimis* exemption (the ''Exemption'') for transactions in certain exchange-traded funds (''ETFs'') from the trade-through provisions of the Intermarket Trading System (''ITS'') Plan.[4] The Exemption was proposed by Commission staff to permit rapid execution of orders in ETFs at prices that may trade through the quotations of other markets, including the NBBO price. Because Exempted Trade-Throughs will, by definition, be exempt from ITS restrictions, a market participant that reports execution of an Exempted Trade-Through will not be required to satisfy an administrative request from any ITS participant for satisfaction

[1] 15 U.S.C. 78s(b)(1).

[2] 17 CFR 240.19b–4.

[3] In this submission, the CHX seeks permanent approval of a rule currently in effect on a 30-day pilot basis. *See* SR–CHX–2002–29.

[4] *See* Securities Exchange Act Release No. 46428, 67 FR 56607 (September 4, 2002). At present, the exemption extends to transactions in three designated ETFs—the Nasdaq-100 Index (''QQQ''), the Dow Jones Industrial Average (''DIAMONDs'') and the Standard & Poor's 500 Index (''SPDRs'')—when the transactions are ''executed at a price that is no more than three cents lower than the highest bid displayed in CQS and no more than three cents higher than the lowest offer displayed in CQS'' (each, an ''Exempted Trade-Through''). The exemption was effective as of September 4, 2002.

following the Exempted Trade-Through.[5]

Article XX, Rules 37(a)(3) and 37(b)(6) of the CHX Rules, which govern execution of limit orders in a CHX specialist's book, provides for execution of such orders at the limit price when certain conditions occur in the primary market. Specifically, these provisions obligate a CHX specialist to fill limit orders in his book if there is a trade-through of the limit price in the primary market. These rule provisions were enacted as a means of attracting order flow to the CHX, by guaranteeing that a limit order resident in a CHX specialist's book would receive a fill if the primary market traded through the limit price. The CHX specialist is willing to provide this ''trade-through protection'' to its customer limit orders because the CHX specialist can seek relief via ITS in the event of a trade-through.

Now that the Exemption has become effective, however, certain primary market trade-throughs in ETFs that will trigger a CHX specialist's obligation to provide trade-through protection will now constitute Exempted Trade-Throughs, and will leave the CHX specialist without recourse to seek satisfaction from the primary market. While the CHX believes that certain CHX specialists may still wish to provide trade-through protection to their limit orders for business and marketing reasons, the CHX believes that trade-through protection should no longer be mandated in the case of Exempted Trade-Throughs. The attached rule would permit, but would not require, a CHX specialist firm to fill limit orders in his book when an Exempted Trade-Through occurs in the primary market.

2. Statutory Basis

The CHX believes the proposal is consistent with the requirements of the Act and the rules and regulations thereunder that are applicable to a national securities exchange, and, in particular, with the requirements of Section 6(b).[6] The CHX believes the proposal is consistent with Section 6(b)(5) of the Act[7] in that it is designed to promote just and equitable principles of trade, to remove impediments, and to perfect the mechanism of, a free and open market and a national market system, and, in general, to protect investors and the public interest.

B. Self-Regulatory Organization's Statement of Burden on Competition

The Exchange does not believe that the proposed rule change will impose any inappropriate burden on competition.

C. Self-Regulatory Organization's Statement on Comments Regarding the Proposed Rule Change Received From Members, Participants or Others

No written comments were either solicited or received.

III. Date of Effectiveness of the Proposed Rule Change and Timing for Commission Action

Within 35 days of the date of publication of this notice in the **Federal Register** or within such other period (i) as the Commission may designate up to 90 days of such date if it finds such longer period to be appropriate and publishes its reasons for so finding or (ii) as to which the self-regulatory organization consents, the Commission will:

(A) by order approve the proposed rule change, or

(B) institute proceedings to determine whether the proposed rule change should be disapproved.

IV. Solicitation of Comments

Interested persons are invited to submit written data, views and arguments concerning the foregoing, including whether the proposal is consistent with the Act. Persons making written submissions should file six copies thereof with the Secretary, Securities and Exchange Commission, 450 Fifth Street, NW., Washington, DC 20549–0609. Copies of the submission, all subsequent amendments, all written statements with respect to the proposed rule change that are filed with the Commission, and all written communications relating to the proposed rule change between the Commission and any person, other than those that may be withheld from the public in accordance with the provisions of 5 U.S.C. 552, will be available for inspection and copying in the Commission's Public Reference Room. Copies of such filing will also be available for inspection and copying at the principal office of the CHX. All submissions should refer to File No. SR–CHX–2002–31 and should be submitted by October 23, 2002.

For the Commission, by the Division of Market Regulation, pursuant to delegated authority.[8]

Margaret H. McFarland,

Deputy Secretary.

[FR Doc. 02–25007 Filed 10–1–02; 8:45 am]

BILLING CODE 8010–01–P

[5] Under current ITS rules and practice, if an ITS participant trades through the quotation of another ITS participant, thereby violating the ITS trade-through prohibition, the non-violating participant is entitled to send an administrative message noting the trade-through and the violating participant is required to respond with a commitment to trade at the price and size quoted by the non-violating participant.

[6] 15 U.S.C. 78(f)(b).

[7] 15 U.S.C. 78f(b)(5).

[8] 17 CFR 200.30–3(a)(12).

SECURITIES AND EXCHANGE COMMISSION

[Release No. 34–46557; File No. SR–CHX–2002–29]

Self-Regulatory Organizations; Notice of Filing and Immediate Effectiveness of proposed Rule Change by The Chicago Stock Exchange, Incorporated Relating to Execution of Limit Orders Following Exempted ITS Trade-Through

September 26, 2002.

Pursuant to section 19(b)(1) of the Securities Exchange Act of 1934 (the ''Act''),[1] and Rule 19b–4 thereunder,[2] notice is hereby given that on September 4, 2002, the Chicago Stock Exchange, Incorporated (''CHX'' or ''Exchange'') filed with the Securities and Exchange Commission (the ''Commission'' or ''SEC'') the proposed rule change as described in Items I, II and III below, which Items have been substantively prepared by the Exchange. On September 25, 2002, the Exchange submitted Amendment No. 1 to the proposed rule change.[3] The Commission is publishing this notice to solicit comments on the proposed rule change from interested persons.

I. Self-Regulatory Organization's Statement of the Terms of Substance of the Proposed Rule Change.

The Exchange proposes to amend certain provisions of CHX Article XX, Rule 37, which governs, among other things, execution of limit orders in a CHX specialist's book following a trade-through in the primary market. Specifically, the CHX seeks to render voluntary a CHX specialist's obligation to fill limit orders in the specialist's book following a primary market trade-through, if such trade-through constitutes an Exempted Trade-Through.

[1] 15 U.S.C. 78s(b)(1).

[2] 17 CFR 240.19b–4.

[3] In Amendment No. 1, the Exchange consented to the Commission's treatment of the proposed rule change as being filed as a stated policy, practice or interpretation with respect to the meaning, administration or enforcement of an existing rule pursuant to Section 19(b)(3)(A) of the Exchange Act. 15 U.S.C. 78s(b)(3)(A). In addition, the Exchange clarified that the proposed rule change was being submitted as a 30-day pilot.

The text of the proposed rule change, which would be in effect for a pilot period of 30 days, is available at the Commission and at the CHX.

II. Self-Regulatory Organization's Statement of the Purpose of, and Statutory Basis for, the Proposed Rule Change

In its filing with the Commission, the CHX included statements concerning the purpose of and basis for the proposed rule change and discussed any comments it received regarding the proposal. The text of these statements may be examined at the places specified in Item IV below. The CHX has prepared summaries, set forth in Sections A, B and C below, of the most significant aspects of such statements.

A. Self-Regulatory Organization's Statement of the Purpose of, and Statutory Basis for, the Proposed Rule Change

1. Purpose

On August 28, 2002, the Commission issued an order granting a *de minimis* exemption (the ''Exemption'') for transactions in certain exchange-traded funds (''ETFs'') from the trade-through provisions of the Intermarket Trading System (''ITS'') Plan.[4] The Exemption was proposed by Commission staff to permit rapid execution of orders in certain ETFs at prices that may trade through the quotations of other markets, including the NBBO price. Because Exempted Trade-Throughs will, by definition, be exempt from ITS restrictions, a market participant that reports execution of an Exempted Trade-Through will not be required to satisfy an administrative request from any ITS participant for satisfaction following the Exempted Trade-Through.[5]

Article XX, Rules 37(a)(3) and 37(b)(6) of the CHX Rules, which govern execution of limit orders in a CHX specialist's book, provide for execution of such orders at the limit price when certain conditions occur in the primary market. Specifically, these provisions obligate a CHX specialist to fill limit orders in his book if there is a trade-through of the limit price in the primary market. These rule provisions were enacted as a means of attracting order flow to the CHX by guaranteeing that a limit order resident in a CHX specialist's book would receive a fill if the primary market traded through the limit price. The CHX specialist is willing to provide this ''trade-through protection'' to its customer limit orders because the CHX specialist can seek relief via ITS in the event of a trade-through.

Now that the Exemption has become effective, however, certain primary market trade-throughs in ETFs that will trigger a CHX specialist's obligation to provide trade-through protection will now constitute Exempt Trade-Throughs, and will leave the CHX specialist without recourse to seek satisfaction from the primary market. While the CHX believes that certain CHX specialists may still wish to provide trade-through protection to their limit orders for business and marketing reasons, the CHX believes that trade-through protection should no longer be mandated in the case of Exempted Trade-Throughs. The proposed rule, in effect for a pilot period of 30 days, would permit, but would not require, a CHX specialist firm to fill limit orders in his book when an Exempted Trade-Through occurs in the primary market.

2. Statutory Basis

The CHX believes the proposal is consistent with the requirements of the Act and the rules and regulations thereunder that are applicable to a national exchange, and, in particular, with the requirements of section 6(b).[6] The CHX believes the proposal is consistent with Section 6(b)(5) of the Act[7] in that it is designed to promote just and equitable principles of trade, to remove impediments, and to perfect the mechanism of, a free and open market and a national market system, and, in general, to protect investors and the public interest.

B. Self-Regulatory Organization's Statement of Burden on Competition

The Exchange does not believe that the proposed rule change will impose any inappropriate burden on competition.

C. Self-Regulatory Organization's Statement on Comments Regarding the Proposed Rule Change Received From Members, Participants or Others

No written comments were either solicited or received.

III. Date of Effectiveness of the Proposed Rule Change and Timing for Commission Action

The foregoing rule change constitutes a stated policy, practice or interpretation with respect to the meaning, administration, or enforcement of an existing rule of the Exchange and therefore, has become effective pursuant to section 19(b)(3)(A)(i) of the Act[8] and subparagraph (f)(1) of Rule 19b–4 thereunder.[9]

At any time within 60 days of the filing of the proposed rule change, the Commission may summarily abrogate such rule change if it appears to the Commission that such action is necessary or appropriate in the public interest, for the protection of investors, or otherwise in furtherance of the purposes of the Act.

IV. Solicitation of Comments

Interested persons are invited to submit written data, views and arguments concerning the foregoing, including whether the proposal is consistent with the Act. Persons making written submissions should file six copies thereof with the Secretary, Securities and Exchange Commission, 450 Fifth Street, NW., Washington, DC 20549–0609. Copies of the submissions, all subsequent amendments, all written statements with respect to the proposed rule change that are filed with the Commission, and all written communications relating to the proposed rule change between the Commission and any person, other than those that may be withheld from the public in accordance with the provisions of 5 U.S.C. 552, will be available for inspection and copying in the Commission's Public Reference Room. Copies of such filing will also be available for inspection and copying at the principal office of the CHX. All submissions should refer to File No. SR–CHX–2002–29 and should be submitted by October 23, 2002.

[4] *See* Securities Exchange Act Release No. 46428, 67 FR 56607 (September 4, 2002). At present, the Exemption extends to transactions in three designated ETFs—the Nasdaq-100 Index (''QQQ''), the Dow Jones Industrial Average (''DIAMONDs'') and the Standard & Poor's 500 Index (''SPDRs'')—when the transactions are ''executed at a price that is no more than three cents lower than the highest bid displayed in CQS and no more than three cents higher than the lowest offer displayed in CQS'' (each, an ''Exempted Trade-Through''). The Exemption is effective as of September 4, 2002.

[5] Under current ITS rules and practice, if an ITS participant trades through the quotation of another ITS participant, thereby violating the ITS trade-through prohibition, the non-violating participant is entitled to send an administrative message noting the trade-through and the violating participant is required to respond with a commitment to trade at the price and size quoted by the non-violating participant.

[6] 15 U.S.C. 78(f)(b).

[7] 15 U.S.C. 78f(b)(5).

[8] 15 U.S.C. 78s(b)(3)(A)(i).

[9] 17 CFR 240.19b–4(f)(1).

For the Commission, by the Division of Market Regulation, pursuant to delegated authority.[10]

Margaret H. McFarland,

Deputy Secretary.

[FR Doc. 02–25009 Filed 10–1–02; 8:45 am]

BILLING CODE 8010–01–M

SECURITIES AND EXCHANGE COMMISSION

[Release No. 34–46561; File No. SR–OCC–2002–09]

Self-Regulatory Organizations; The Options Clearing Corporation; Order Granting Approval of a Proposed Rule Change Relating to Fixing Settlement Prices in the Event of Market Disruptions

September 26, 2002.

I. Introduction

On May 17, 2002, The Options Clearing Corporation (''OCC'') filed with the Securities and Exchange Commission (''Commission'') proposed rule change SR–OCC–2002–09 pursuant to section 19(b)(1) of the Securities Exchange Act of 1934 (''Act'').[1] Notice of the proposal was published in the **Federal Register** on August 1, 2002.[2] No comment letters were received. For the reasons discussed below, the Commission is approving the proposed rule change.

II. Description

The primary purpose of the proposed rule change is to ensure that OCC will have the ability, in case of market disruptions, to conform settlement prices for OCC-cleared security futures and index options, where appropriate, to settlement prices that are used for related products (such as other futures on the same security or index) traded in other markets and not cleared by OCC. The proposed rule change will primarily affect the fixing of exercise settlement amounts for expiring options as well as final settlement prices for maturing futures contracts.[3] OCC does not anticipate any substantive change in its present policy with respect to fixing settlement prices for options that are exercised prior to expiration.[4]

In the event of an interruption in the markets for an underlying security or one or more component securities in an underlying index, OCC needs to have discretion to act to set final settlement values in a manner that avoids inconsistencies between the futures and options markets and among futures markets.[5] At times, investors employ hedging and other trading strategies that involve holding positions in different contracts on the same underlying security or index. These strategies are based on the expectation that the values of different derivative contracts with the same underlying interest will have a predictable relationship to one another. This expectation may not be met when trading halts or other disruptions in markets for the underlying interests require the derivatives markets to fix settlement prices using prices or values other than those that would normally be used. In such cases, discrepancies in settlement prices can occur unless prices for derivative products traded in different markets are fixed using a common method. Unless such coordination occurs, investors with positions in options and futures that were intended to hedge one another may find that the positions do not produce the anticipated offset.

In the spring of 2000, OCC attempted to solve the problem of a potential disconnect between the options and futures markets in setting final index contract settlement prices by conforming its rules more closely to the rules of the Chicago Mercantile Exchange (''CME'') as then in effect.[6] OCC's rule change broadened the circumstances under which OCC could fix a settlement price for expiring index options to include situations where market disruptions affected one or more securities in an index (as opposed to ''securities representing a substantial portion of the value of an index'') and added a paragraph relating solely to expiring options specifically permitting OCC to fix settlement prices based on the next opening prices for one or more component stocks.[7]

Effective December 1, 2001, CME changed its rules governing its method of fixing final settlement prices for each of its index futures products under certain circumstances. CME's newly amended rules provide that if the primary market for a component stock opens for trading on the day scheduled for determination of a final settlement price but the component stock does not trade while the market is open, the price of the component stock for purposes of calculating the final settlement price will be based on the last sale price of the stock *unless* CME's president or his delegate determines that there is a reasonable likelihood that trading in the component stock will occur shortly. In that case, for purposes of determining the final settlement price, the price of the component stock may be based on the opening price of the component stock on the next day the component stock is traded on its primary market.[8]

OCC's existing rules do not authorize OCC to fix a settlement price based on a stock's next opening price in situations where the stock's primary market is open but the stock does not trade. SR–OCC–00–01 authorized the use of opening values only in cases where a stock's primary market did not open or remain open for trading at or before the time when the exercise settlement amount would ordinarily be determined. As a result, OCC is again faced with a potential disconnect between its rules and CME's rules.

The most fundamental aspect of SR–OCC–00–01 was that for the first time OCC was allowed to fix a settlement

[10] 17 CFR 200.30–3(a)(12).

[1] 15 U.S.C. 78s(b)(1).

[2] Securities Exchange Act Release No. 46265 (July 25, 2002), 67 FR 49973.

[3] These will include single stock futures and narrow-based index futures as well as broad-based index futures subject to the exclusive jurisdiction of the Commodity Futures Trading Commission.

[4] That general policy will be restated in new Interpretation .02 to Section 4 of Article XVII of OCC's by-laws.

[5] This rule change will affect the fixing of final settlement prices for futures contracts and exercise settlement amounts for options. However, in the case of options exercised other than at expiration, coordination with other markets is ordinarily not a significant factor because either there is no concurrent final settlement in related futures markets or an investor need not exercise the option.

[6] For example, CME Rule 2003.A., which governs the method for determining the final settlement price for Standard & Poor's 500 Stock Index Futures, provided (at that time) as follows:

If the primary market for a component stock in the index does not open on the day scheduled for determination of the Final Settlement Price, then the price of that stock shall be determined, for the purposes of calculating the Final Settlement Price, based on the opening price of that stock on the next day that its primary market is open for trading.

If a component stock in the index does not trade on the day scheduled for determination of the Final Settlement Price while the primary market for that stock is open for trading, the price of that stock shall be determined, for the purposes of calculating the Final Settlement Price, based on the last sale price of that stock.

[7] Securities Exchange Act Release No. 42769 (May 9, 2000), 65 FR 31036 (May 15, 2000) [SR–OCC–2000–01].

[8] For example, CME added the following underlined language to CME Rule 2003.A:

If a component stock in the index does not trade on the day scheduled for determination of the Final Settlement Price while the primary market for that stock is open for trading, the price of that stock shall be determined, for the purposes of calculating the Final Settlement Price, based on the last sale price of that stock. *However, if the President of the Exchange or his delegate determines that there is a reasonable likelihood that trading in the stock shall occur shortly, the President or his delegate may instruct that the price of stock shall be based, for the purposes of calculating the Final Settlement Price, on the opening price of the stock on the next day that it is traded on its primary market. Factors to be considered in determining whether trading in the stock is likely to occur shortly shall include the nature of the event and recent liquidity levels in the affected stock.*

value based on prices that occurred after an expiration and to treat options that were in the money based upon that subsequently determined price as having been exercised on the expiration date. This rule change makes more explicit the broad scope of OCC's discretion to invoke that authority and the broad discretion that OCC or an adjustment panel (in the case of options) has in fixing final settlement prices and exercise settlement amounts.[9] The rule change also will make clear that OCC may follow the procedures in CME's current rule and may use either the latest closing prices for individual stocks that fail to trade or use opening prices for the next day on which the stock trades.

The authority to fix final settlement prices for futures and exercise settlement amounts for options in unusual market conditions should be sufficiently broad to ensure that the authority will exist to conform such settlement values to the settlement values established for related products traded in other markets whenever that result is deemed, on balance, to be in the best interest of investors. Experience has shown that this authority must be stated broadly so that if CME or other related markets in the future amend the circumstances in which they can fix settlement values or the means that they use to fix those values, OCC will not need to amend its rules further to conform. Because CME and other markets often do not coordinate with OCC when they change their rules governing the fixing of settlement values, OCC may not be able to conform its rules to amendments made by other markets quickly enough to avoid a disconnect between the futures and options markets. The rule change provides broad discretion both as to the circumstances in which authority would exist to fix a settlement value and the method by which the settlement value would be fixed.

The primary purpose of the rule change is to give OCC broad discretionary authority to adjust settlement values for OCC-cleared index options and futures whenever, and in whatever manner, OCC deems appropriate to avoid a disconnect between the futures and options markets or among the futures markets. It is equally important to note, however, that such coordination is primarily of importance only when OCC-cleared options are exercised on expiration dates or when OCC-cleared futures have maturity dates that coincide with the expiration, maturity, or delivery dates of related contracts traded in other markets. Accordingly, exercises of index options prior to the expiration date would not necessarily be adjusted to conform to activity in other markets. Finally, even in the case of final settlement values that would ordinarily correspond with final settlement values in other markets, the coordination of such settlement values is not the only factor that OCC (or an adjustment panel) will consider in deciding whether and how to fix settlement values. Accordingly, there could be circumstances where settlement values for OCC-cleared products would not be conformed to prices used in other markets even though the authority would exist to do so.

[9] A supplement to the Options Disclosure Document that describes the substance of the by-law changes proposed herein has been filed with the Commission.

III. Discussion

Section 19(b)(2)(B) of the Act directs the Commission to approve a proposed rule change of a self-regulatory organization if it finds that such proposed rule change is consistent with the requirements of the Act and the rules and regulations thereunder applicable to such organization. Section 17A(b)(3)(F) of the Act requires that the rules of a clearing agency be designed to protect investors and the public interest.[10] By being able in times of market disruptions to conform settlement prices for security futures and index options to settlement prices that are used for related products traded in other markets, OCC will be able to fix exercise prices to better meet investors' expectations in establishing hedged positions that the values of different derivatives contracts with the same underlying interest will have a predictable relationship to one another. As a result, investors will be better protected from losses resulting from market disruptions. Therefore, OCC's proposed rule change meets the requirements of section 17A(b)(3)(F).

IV. Conclusion

On the basis of the foregoing, the Commission finds that the proposed rule change is consistent with the requirements of the Act and in particular with the requirements of section 17A of the Act and the rules and regulations thereunder applicable.

It is therefore ordered, pursuant to section 19(b)(2) of the Act, that the proposed rule change (File No. SR–OCC–2002–09) be, and hereby is, approved.

[10] 15 U.S.C. 78q–1(b)(3)(F).

For the Commission by the Division of Market Regulation, pursuant to delegated authority.[11]

Margaret H. McFarland,

Deputy Secretary.

[FR Doc. 02–25010 Filed 10–1–02; 8:45 am]

BILLING CODE 8010–01–P

[11] 17 CFR 200.30–3(a)(12).

SECURITIES AND EXCHANGE COMMISSION

[Release No. 34–46545; File No. SR–Phlx–2002–49]

Self-Regulatory Organizations; Notice of Filing of Proposed Rule Change by the Philadelphia Stock Exchange, Inc. Relating to Extension of PACE Guarantee Exemption

September 24, 2002.

Pursuant to section 19(b)(1) of the Securities Exchange Act of 1934 (''Act''),[1] and Rule 19b–4 thereunder,[2] notice is hereby given that on September 12, 2002, the Philadelphia Stock Exchange, Inc. (''Phlx'' or ''Exchange'') filed with the Securities and Exchange Commission (''SEC'' or ''Commission'') the proposed rule change as described in Items I, II, and III below, which Items have been prepared by the self-regulatory organization.

The Commission is publishing this notice to solicit comments on the proposed rule change from interested persons.

I. Self-Regulatory Organization's Statement of the Terms of Substance of the Proposed Rule Change

The Phlx proposes to amend the first paragraph of Supplementary Material Section .10(a)(iii) of Exchange Rule 229, Philadelphia Stock Exchange Automated Communication and Execution System (PACE''),[3] to extend a current exemption from that provision so that it will be effective for as long as the Commission's exemption from section 8(d) of the ITS Plan issued by Commission Order dated August 28, 2002 (the ''ITS Exemption'') remains in effect.[4]

[1] 15 U.S.C. 78s(b)(1).

[2] 17 CFR 240.19b–4.

[3] PACE is the Exchange's Automated Communication and Execution System. PACE provides a system for the automatic execution of orders on the Exchange equity floor under predetermined conditions.

[4] *See* Securities Exchange Act Release No. 46428, 67 FR 56607 (September 4, 2002) (Order Pursuant to Section 11A of the Securities Exchange Act of 1934 and Rule 11Aa3–2(f) thereunder Granting A De Minimis Exemption for Transactions in Certain Exchange-Traded Funds from the Trade-Through Provisions of the Intermarket Trading System.). The ITS Plan is a national market system plan approved by the Commission pursuant to Section 11A of the Act and Rule 11Aa3–2 thereunder.

The text of the proposed rule change is available at the Phlx and the Commission.

II. Self-Regulatory Organization's Statement of the Purpose of, and Statutory Basis for, the Proposed Rule Change

In its filing with the Commission, the Exchange included statements concerning the purpose of and basis for the proposed rule change and discussed any comments it received on the proposed rule change. The text of these statements may be examined at the places specified in Item IV below. The Exchange has prepared summaries, set forth in sections A, B and C below, of the most significant aspects of such statements.

A. Self-Regulatory Organization's Statement of the Purpose of, and Statutory Basis for, the Proposed Rule Change

1. Purpose

Exchange Rule 229, Supplementary Material Section .10(a)(iii) provides that if 100 or more shares print through the limit price on any exchange(s) eligible to compose the PACE Quote [5] after the time of entry of any such order into PACE, the specialist shall execute all such orders at the limit price without waiting for an accumulation of 1000 shares to print at the limit price on the New York market.[6] On August 28, 2002, the Commission issued the ITS Exemption which applies to the exchange-traded funds (''ETFs'') tracking the Nasdaq-100 Index (''QQQs''), the Dow Jones Industrial Average (''DIAMONDs''), and the Standard & Poor's 500 Index (''SPDRs'').[7] On September 4, 2002 (the effective date of the ITS Exemption) the Exchange filed a proposed rule change for immediate effectiveness to adopt an exemption from the first paragraph of Phlx Rule 229.10(a)(iii) beginning September 4, 2002 for a period of 30 days ending on October 4, 2002.[8] This exemption was intended correlate with the ITS Exemption.

Phlx Rule 229.10(a)(iii) requires a Phlx specialist to execute certain orders that are traded-through by another market center. Previously, although the specialist had this obligation the specialist was, in turn, entitled to ''satisfaction'' of those orders pursuant to section 8(d) of the ITS Plan. Now, where trading through is no longer prohibited by the ITS Plan, as enumerated in the ITS Exemption, the specialist does not have recourse to seek ''satisfaction'' for these orders and is alone responsible for those executions. Thus, the Phlx believes that its provision guaranteeing an execution no longer makes sense. Moreover, the provision now unduly burdens the specialist by requiring the specialist to execute orders in situations where the specialist does not have access to trading at that price. Thus, the Exchange is proposing that the existing exemption from the requirements of the first paragraph of Rule 229 Supplementary Material Section 10(a)(iii), which expires on October 4, 2002, remain in effect so long as the ITS Exemption remains in effect, including by any extensions the Commission may determine to provide.

2. Statutory Basis

The proposed rule change is consistent with section 6(b) of the Act [9] in general and furthers the objectives of section 6(b)(5) [10] in particular in that it is designed to promote just and equitable principles of trade; to foster cooperation and coordination with persons engaged in regulating, clearing, settling, processing information with respect to, and facilitating transactions in securities; to remove impediments to and perfect the mechanism of a free and open market and a national market system; and, in general, to protect investors and the public interest; and is not designed to permit unfair discrimination between customers, issuers, brokers or dealers. By adopting the proposed exemption, the Exchange avoids burdening specialists beginning October 4, 2002, with the obligation to fill an order in circumstances where an external event triggered the execution obligation and the specialist could not access trading at that price.

B. Self-Regulatory Organization's Statement on Burden on Competition

The Phlx does not believe that the proposed rule change will impose any inappropriate burden on competition.

C. Self-Regulatory Organization's Statement on Comments on the Proposed Rule Change Received From Members, Participants, or Others

No written comments were either solicited or received.

III. Date of Effectiveness of the Proposed Rule Change and Timing for Commission Action

Within 35 days of the date of publication of this notice in the **Federal Register** or within such other period (i) as the Commission may designate up to 90 days of such date if it finds such longer period to be appropriate and publishes its reasons for so finding or (ii) as to which the self-regulatory organization consents, the Commission will:

(A) By order approve such proposed rule change, or

(B) Institute proceedings to determine whether the proposed rule change should be disapproved.

IV. Solicitation of Comments

Interested persons are invited to submit written data, views and arguments concerning the foregoing, including whether the proposed rule change is consistent with the Act. Persons making written submissions should file six copies thereof with the Secretary, Securities and Exchange Commission, 450 Fifth Street, NW., Washington, DC 20549–0609. Copies of the submission, all subsequent amendments, all written statements with respect to the proposed rule change that are filed with the

[5] PACE Quote is defined in Rule 229 as the best bid/ask quote among the American, Boston, Cincinnati, Chicago, New York, Pacific or Philadelphia Stock Exchange, or the Intermarket Trading System/Computer Assisted Execution System (''ITS/CAES'') quote, as appropriate.

[6] To be understood, Section .10(a)(iii) must be read in conjunction with the preceding Section of the PACE Rule. Supplementary Material Section .10(a)(ii) provides as follows:

Non-Marketable Limit Orders—Unless the member organization entering orders otherwise elects, round-lot limit orders up to 500 shares and the round-lot portion of PRL limit orders up to 599 shares which are entered at a price different than the PACE Quote will be executed in sequence at the limit price when an accumulative volume of 1000 shares of the security named in the order prints at the limit price or better on the New York market after the time of entry of any such order into PACE. For each accumulation of 1000 shares which have been executed at the limit price on the New York market, the specialist shall execute a single limit order of a participant up to a maximum of 500 shares for each round-lot limit order up to 500 shares or the round-lot portion of a PRL limit order up to 599 shares.

[7] The Exchange does not currently trade DIAMONDs or SPDRs but may determine to do so in the future. The Exchange does trade QQQs. The Nasdaq-100®, Nasdaq-100 Index®, Nasdaq®, The Nasdaq Stock Market® Nasdaq-100 Shares, SM, Nasdaq-100 TrustSM, Nasdaq-100 Index Tracking StockSM, and QQQSM are trademarks or service marks of The Nasdaq Stock Market, Inc. (*Nasdaq*) and have been licensed for use for certain purposes by the Philadelphia Stock Exchange pursuant to a License Agreement with Nasdaq. The Nasdaq-100 Index® (the *Index*) is determined, composed, and calculated by Nasdaq without regard to the Licensee, the Nasdaq-100 TrustSM, or the beneficial owners of Nasdaq-100 SharesSM. Nasdaq has complete control and sole discretion in determining, comprising, or calculating the Index or in modifying in any way its method for determining, comprising, or calculating the Index in the future.

[8] *See* Securities Exchange Act Release No. 46481 (September 10, 2002), 67 FR 58669 (September 17, 2002) (SR–Phlx–2002–48).

[9] 15 U.S.C. 78f(b).

[10] 15 U.S.C. 78f(b)(5)

Commission, and all written communications relating to the proposed rule change between the Commission and any person, other than those that may be withheld from the public in accordance with the provisions of 5 U.S.C. 552, will be available for inspection and copying in the Commission's Public Reference Room. Copies of such filing will also be available for inspection and copying at the principal office of the Phlx. All submissions should refer to File No. SR–Phlx–2002–49 and should be submitted by October 23, 2002.

For the Commission, by the Division of Market Regulation, pursuant to delegated authority.[11]

Margaret H. McFarland,

Deputy Secretary.

[FR Doc. 02–25006 Filed 10–1–02; 8:45 am]

BILLING CODE 8010–01–P

[11] 17 CFR 200.30–3(a)(12).

SMALL BUSINESS ADMINISTRATION

[Declaration of Disaster #3447]

State of Indiana

As a result of the President's major disaster declaration on September 25, 2002, I find that Bartholomew, Blackford, Brown, Daviess, Decatur, Delaware, Fayette, Franklin, Gibson, Grant, Greene, Hamilton, Hancock, Hendricks, Henry, Jay, Johnson, Knox, Lawrence, Madison, Marion, Monroe, Morgan, Owen, Pike, Posey, Randolph, Rush, Shelby, Sullivan, Tipton and Vanderburgh in the State of Indiana constitute a disaster area due to damages caused by severe storms and tornadoes occurring on September 20, 2002. Applications for loans for physical damage as a result of this disaster may be filed until the close of business on November 25, 2002 and for economic injury until the close of business on June 25, 2003 at the address listed below or other locally announced locations:

U.S. Small Business Administration, Disaster Area 2 Office, One Baltimore Place, Suite 300, Atlanta, GA 30308.

In addition, applications for economic injury loans from small businesses located in the following contiguous counties may be filed until the specified date at the above location: Adams, Boone, Clay, Clinton, Dearborn, Dubois, Howard, Huntington, Jackson, Jennings, Martin, Miami, Montgomery, Orange, Putnam, Ripley, Union, Vigo, Wabash, Warrick, Washington, Wayne and Wells in the State of Indiana; Clark, Crawford, Gallatin, Lawrence, Wabash and White counties in the State of Illinois; Henderson and Union counties in the State of Kentucky; and Butler, Darke, Hamilton and Mercer counties in the State of Ohio.

The interest rates are:

	Percent
For Physical Damage:	
Homeowners with credit available elsewhere	6.625
Homeowners without credit available elsewhere	3.312
Businesses with credit available elsewhere	7.000
Businesses and non-profit organizations without credit available elsewhere	3.500
Others (including non-profit organizations) with credit available elsewhere	6.375
For Economic Injury:	
Businesses and small agricultural cooperatives without credit available elsewhere	3.500

The number assigned to this disaster for physical damage is 344711. For economic injury the number is 9R7600 for Indiana; 9R7700 for Illinois; 9R7800 for Kentucky; and 9R7900 for Ohio.

(Catalog of Federal Domestic Assistance Program Nos. 59002 and 59008)

Dated: September 26, 2002.

S. George Camp,

Acting Associate Administrator for Disaster Assistance.

[FR Doc. 02–24995 Filed 10–1–02; 8:45 am]

BILLING CODE 8025–01–P

OFFICE OF SPECIAL COUNSEL

Guidelines for Ensuring and Maximizing the Quality, Objectivity, Utility, and Integrity of Information Disseminated by the Office of Special Counsel (OSC)

AGENCY: Office of Special Counsel

ACTION: Final Agency Guidelines

SUMMARY: Pursuant to guidance issued by the Office of Management and Budget (OMB), the U.S. Office of Special Counsel (OSC) published a *Federal Register* (FR) notice on April 30, 2002, inviting public comment on its draft report to OMB with proposed OSC guidelines for ensuring and maximizing the quality, objectivity, utility, and integrity of certain information disseminated to the public (''information quality guidelines''). 67 FR 21316. This notice describes comments received, and announces the availability of OSC's final information quality guidelines.

DATES: Final OSC information quality guidelines become effective on October 2, 2002

FOR FURTHER INFORMATION CONTACT: Sharyn Danch, by mail (Planning and Advice Division, Office of Special Counsel, 1730 M Street, NW., (Suite 201), Washington, DC 20036–4505), or electronic mail (*info_quality@osc.gov*). OSC's final information quality guidelines are available on the agency Web site (*http://www.osc.gov*, at the ''Reading Room'' link).

SUPPLEMENTARY INFORMATION: OMB guidelines, issued to Federal agencies under section 515 of the Treasury and General Government Appropriations Act for Fiscal Year 2001 (Public Law 106–554, 114 Stat. 2763), provide that each agency should: (1) develop information resources management procedures and issue agency guidelines to ensure the quality, objectivity, utility and integrity of information disseminated by the agency to the public; (2) establish administrative mechanisms for affected persons to seek and obtain the correction of disseminated information that does not comply with the OMB or agency guidelines; and (3) report annually to OMB on requests for correction received by the agency and the resolution of those requests. OMB advises agencies to use common sense in adapting its guidelines to information disseminated to the public, taking into account the nature and importance of the information involved. Finally, OMB encourages agencies to incorporate standards and procedures required by its guidelines into existing agency information management and administrative practices, under applicable laws and OMB circulars.

On April 30, 2002, pursuant to the OMB guidelines, OSC published its draft report to OMB with proposed OSC information quality guidelines, and invited public comment on or before June 1, 2002. OSC received one response, from the Center for Regulatory Effectiveness (CRE), on May 30th, 2002. On June 6, 2002, OMB gave agencies an extension of time (to August 1, 2002) in which to submit their reports with proposed guidelines to OMB, and suggested that agencies consider extending the public comment period on their guidelines. 67 FR 40755. On July 8, 2002, OSC published a notice extending the public comment period to July 10, 2002. 67 FR 45168. A second response, received from Citizens for Sensible Safeguards (CSS) on June 14, 2002, was deemed to have been received during the comment period, as

extended. OSC carefully considered both responses received.

CRE advised OSC that its response (entitled ''Proposed CRE Generic Comments to all Federal Agencies Related to Data Quality Guidelines'') consisted of generic comments, provided to all Federal agencies on cross-cutting issues that might apply to draft guidelines of only some agencies. OSC reviewed the CRE comments, and identified two that might apply to its proposed guidelines.[1]

Under comment (1), CRE asserted that neither OMB nor Federal agencies have the authority to exempt types and categories of information from their guidelines. CRE maintained that the OMB guidelines improperly limited the relevant statutory language requiring that guidelines apply to ''information...disseminated by Federal agencies,'' by including certain exemptions in the definition of ''dissemination.''[2] CRE stated that ''any information that an agency has in fact made public'' must be covered. OSC's proposed guidelines incorporated the OMB definition of ''dissemination'' with the included exemptions. OSC believes that no change should be made in its guidelines until such time as OMB may revise its guidelines to amend the definition and exemptions in question.[3]

Under comment (6), CRE stated that in determining who may file an administrative complaint requesting correction of disseminated information, agencies should use a broad definition of ''affected persons,'' noting with favor the definition OMB used in its guidelines to agencies.[4] While the draft report to OMB described specific target audiences for information disseminated by OSC,[5] a description of ''affected persons'' was not included in the agency's proposed guidelines. OSC agrees that such a description should appear in the guidelines. Part IV.C. of OSC's guidelines, therefore, now describes, by reference to the target audiences described in its initial report to OMB and in OMB's guidelines for Federal agencies, affected persons who can file an administrative request for correction.

The comment received from CSS also consisted of generic, non-agency specific comments. OSC reviewed all the comments and determined that no changes to its proposed guidelines were needed. One or more of the following factors applied to each comment: (1) OSC guidelines met or exceeded the standards suggested by CSS; (2) the comment concerned a type of information not disseminated by OSC; or (3) the proposed OSC guidelines adopted or mirrored provisions in OMB's guidance to Federal agencies.

After review of the public responses received, OSC sent its report and proposed information quality guidelines for OMB review and comment on August 1, 2002, and for final review on September 17, 2002. Pursuant to OMB's review and further guidance to Federal agencies, OSC revised its proposed guidelines to: (1) clarify that OSC press releases typically contain information about matters not covered under OMB's guidelines, and (2) conform times for responses to requestors seeking corrections of information, and appealing OSC decisions on those requests, from 30 to 60 days.

OSC's final information quality guidelines and September 17, 2002, report to OMB are available, upon publication of this notice, on the agency's Web site, (*http://www.osc.gov* at the ''Reading Room'' link).

Dated: September 26, 2002.

Elaine D. Kaplan,

Special Counsel.

[FR Doc. 02–25041 Filed 10–1–02; 8:45 am]

BILLING CODE 7405–01–M

[1] Six of CRE's 16 numbered comments (nos. 5, 11, 12, 14, 15, 16) addressed matters not applicable to information disseminated by OSC and, therefore, not addressed by its guidelines. Other comments (nos. 7, 8, and 9), critical of guidelines issued by some agencies, did not apply to OSC because its guidelines met or exceeded the standard(s) suggested by CRE. Several comments (nos. 2, 10, and 13, and discussion referring to no. 1) indicated dissatisfaction with definitions used in the OMB guidelines issued to agencies. OSC has decided to keep any definitions taken from the OMB guidelines, until such time as OMB may revise its guidelines to amend the definitions in question. As noted by CRE in its comments, ''[a]ll agency guidelines are required to comply with the requirements set forth by OMB in their interagency February 22nd Final Guidelines. (statutory citations omitted).''

[2] ''Dissemination does not include distribution limited to government employees or agency contractors or grantees; intra- or inter-agency use or sharing of government information; and responses to requests for agency records under the Freedom of Information Act, the Privacy Act, the Federal Advisory Committee Act or other similar law. This definition also does not include distribution limited to correspondence with individuals or persons, press releases, archival records, public filings, subpoenas or adjudicative processes.'' 67 FR 8452, 8460 (Feb. 22, 2002).

[3] See last sentence of *fn.* 1, above. OSC's proposed guidelines did not add exemptions to those defined by OMB. Those parts of CRE comments (1), (3), and (4) that addressed agency guidelines defining other exemptions did not apply to OSC.

[4] OMB defined affected persons as ''people who may benefit or be harmed by the disseminated information ... includ[ing] persons who are seeking to address information about themselves as well as persons who use information. (citation omitted).''

[5] ''Primary target audiences ... are current and former federal government employees, applicants for federal employment, employee representatives, and state and local government employees (*i.e.*, persons affected by or interested in the laws and regulations enforced by OSC).'' 67 FR 21317.

DEPARTMENT OF TRANSPORTATION

Federal Aviation Administration

Proposed Advisory Circular; Continued Airworthiness Assessments of Powerplant and Auxiliary Power Unit Installations on Transport Category Airplanes

AGENCY: Federal Aviation Administration, DOT.

ACTION: Notice of availability of proposed advisory circular and request for comments.

SUMMARY: This notice announces the availability of proposed Advisory Circular (AC) No. 39.XX, Continued Airworthiness Assessments of Power plant and Auxiliary Power Unit Installations on Transport Category Airplanes.

DATES: Comments must be received on or before November 1, 2002.

ADDRESSES: Send all comments on the proposed AC to the Federal Aviation Administration, Attn: Engine and Propeller Standards Staff, ANE–110, Engine and Propeller Directorate, Aircraft Certification Service, 12 New England Executive Park, Burlington, MA, 01803–5299.

FOR FURTHER INFORMATION CONTACT: Ann Azevedo, Engine and Propeller Standards Staff, ANE–110, at the above address, telephone (781) 238–7117, fax (781) 238–7199. A copy of the subject AC may also be obtained electronically by writing to the following Internet address: *ann.azevedo@faa.gov.*

SUPPLEMENTARY INFORMATION:

Comments Invited

A copy of the subject AC may be obtained by contacting the person named under **FOR FURTHER INFORMATION CONTACT** or by downloading the proposed AC from the following Internet website: http://www.airweb.faa.gov/rgl. The FAA invites interested parties to comment on the proposed AC. Comments should identify the subject of the AC and be submitted to the individual identified under **FOR FURTHER INFORMATION CONTACT**. The FAA will consider all communications received by the closing date before issuing the final AC.

Background

The proposed Advisory Circular (AC) describes the Continued Airworthiness Assessment Methodologies (CAAM). The Federal Aviation Administration (FAA) Engine and Propeller Directorate (EPD) and the Transport Airplane Directorate (TAD) may use CAAM to identify unsafe conditions and

determine when an ''unsafe condition is likely to exist or develop in other products of the same type design'' before prescribing corrective action in accordance with Title 14 of the Code of Federal Regulations (14 CFR) part 39. CAAM is used for products associated with the Powerplant or Auxiliary Power Unit (APU) Installations on Transport Category Airplanes.

Continued airworthiness requires that safety concerns within the existing fleet be addressed, and the knowledge gained applied for the benefit of future fleets as well. This proposed AC also provides CAAM guidance for estimating the risks associated with identified unsafe conditions; defining prioritizing, and selecting suitable corrective actions for all identified unsafe conditions; and verifying that the corrective actions were effective. This proposed AC is intended to present a tangible means of logically assessing and responding to the safety risks posed by unsafe conditions.

This proposed AC does not establish any requirement that the FAA must perform a risk assessment before issuing an AD, or that the FAA must wait to issue an AD until the design approval holder performs a risk assessment, or that the FAA must accept the findings of a risk assessment performed by the design approval holder. CAAM, as described in this proposed AC, assists the FAA in making decisions concerning the priority in which unsafe conditions should be addressed. The FAA may issue an AD for a particular unsafe condition before a risk assessment is performed, or without having an assessment performed at all.

In this regard, CAAM does not define ''unsafe condition'' in a powerplant or APU installation. Rather, CAAM is a tool that the FAA usually will sue to make the kinds of decisions described above.

Note that the descriptive level of the CAAM process contained in this AC is aimed at the individual, whether from the FAA or the manufacturer, who is without extensive risk analysis experience. Some of the material within this AC will therefore seem very basic to the experienced analyst. Additionally, this proposed AC recognizes that an analysis must sometimes be performed without the benefit of readily-available information from the manufacturer. Typically, it is expected that more specific information will be available to the analyst, thus eliminating the need for some of the process steps that are described.

While information may be provided by and the assessment performed by the applicant, decisions as to whether an unsafe condition exists, and the appropriate responses to that unsafe condition, are exclusively the responsibility of the Administrator.

This proposed advisory circular, published under the authority granted to the Administrator by 49 U.S.C. 106(g), 40113, 44701–44702, 44704, provides guidance for the use of CAAM.

Dated: Issued in Burlington, Massachusetts, on September 24, 2002.

Francis Favara,

Assistant Manager, Engine and Propeller Directorate, Aircraft Certification Service.

[FR Doc. 02–25053 Filed 10–1–02; 8:45 am]

BILLING CODE 4910–13–M s

DEPARTMENT OF TRANSPORTATION

Federal Aviation Administration

[Summary Notice No. PE–2002–57]

Petitions for Exemption; Summary of Petitions Received

AGENCY: Federal Aviation Administration (FAA), DOT.

ACTION: Notice of petitions for exemption received, extension of comment period.

SUMMARY: This action extends the comment period for a petition for exemption that was published in the **Federal Register** on September 10, 2002. The FAA has determined that the summary was general in nature. To offer the public more information on the petition, the FAA has revised the summary. In addition, the FAA is extending the comment period to allow interested parties sufficient time to submit comments.

DATES: Comments about petitions received must identify the petition docket number involved and must be received on or before October 14, 2002.

ADDRESSES: Send comments on any petition to the Docket Management System, U.S. Department of Transportation, Room Plaza 401, 400 Seventh Street, SW., Washington, DC 20590–0001. You must identify the docket number FAA–2002–12501 at the beginning of your comment. If you wish to receive confirmation that FAA received your comments, include a self-addressed, stamped postcard.

You may also submit comments through the Internet to *http://dms.dot.gov.* You may review the public docket containing the petition, any comments received, and any final disposition in person in the Dockets Office between 9 a.m. and 5 p.m., Monday through Friday, except Federal holidays. The Dockets Office (telephone 1–800–647–5527) is on the plaza level of the NASSIF Building at the Department of Transportation at the above address. Also, you may review public dockets on the Internet at *http://dms.dot.gov.*

FOR FURTHER INFORMATION CONTACT: Denise Emrick (202) 267–5174, Office of Rulemaking (ARM–1), Federal Aviation Administration, 800 Independence Avenue, SW., Washington, DC 20591.

Extension of Comment Period

Pursuant to FAA's rulemaking provisions governing the application, processing, and disposition of petitions for exemption part 11 of Title 14, Code of Federal Regulations (14 CFR), this notice contains a summary of certain petitions seeking relief from specified requirements of 14 CFR. The purpose of this notice is to improve the public's awareness of, and participation in, this aspect of FAA's regulatory activities. Neither publication of this notice nor the inclusion or omission of information in the summary is intended to affect the legal status of any petition or its final disposition.

The original summary of the petition was published in the **Federal Register** on September 10, 2002 (67 FR 57478). The FAA has determined that the summary was general in nature; therefore, the FAA is offering the public more information on this petition to allow the public a chance to offer comments more specific to the situation. The FAA has determined that an extension of the comment period is consistent with the public interest, and that good cause exists for taking this action. Accordingly, the comment period for Docket No. FAA–2002–12501 is extended until October 14, 2002.

Issued in Washington, DC, on September 25, 2002.

Donald P. Byrne,

Chief Counsel for Regulations.

Petitions for Exemption

Docket No.: FAA–2002–12501.

Petitioner: Mr. Anthony P.X. Bothwell, Attorney for ten petitioners.

Section of 14 CFR Affected: 14 CFR 121.383(c).

Description of Relief Sought: To permit the petitioners to act as pilots in operations conducted under part 121 after reaching their 60th birthdays. The petitioners submit no medical information to support this petition, instead, the petitioners allege that the Age 60 rule has no safety basis and was originally adopted as an act of favoritism and continues to be supported by the FAA as an economic favor to the airline industry. The

petitioners allege that the FAA intentionally misrepresented the justification for the Age 60 rule to the public, Congress, Federal courts, and the International Civil Aviation Organization. The petitioners allege that the U.S. Senate Committee on Appropriations ordered the FAA to conduct a study in a 2000 appropriations bill. The petitioner allege that the study was flawed. Further, the petitioners allege that there is ''evidence of the FAA's intent—perhaps even its complicity with the [Senate Appropriations] Committee—to mislead.'' The petitioners assert that the FAA has refused to collect data, make data available that has been collected, or analyze data that has been collected that would undermine the Age 60 rule. The petitioners claim pilot incapacitation poses no threat to safety in air operations; therefore, there is no justification for the FAA ''no exemptions'' policy towards Age 60. The petitioners allege that when FAA considers granting exemptions to Age 60 rule, it does not take into consideration that performance and medical checks would eliminate at-risk pilots. The petitioners claim that they are entitled to be exempt from the Age 60 rule because the rule has no medical or safety basis; therefore, granting them an exemption to the rule will not adversely affect safety.

[FR Doc. 02–25056 Filed 10–1–02; 8:45 am]

BILLING CODE 4910–13–P

DEPARTMENT OF TRANSPORTATION

Federal Aviation Administration

User Input to the Aviation Weather Technology Transfer Board

AGENCY: Federal Aviation Administration (FAA), Department of Transportation (DOT).

ACTION: Notice of public meeting.

SUMMARY: The FAA will hold an informal public meeting to seek aviation weather user input to the Aviation Weather Technology Transfer (AWTT) Board. Details: October 22, 2002; Hilton Palm Springs Resort, 400 East Tahquitz Canyon Way, Palm Springs, California; 1 p.m. to 5 p.m. in the Horizon Room. The objective of this meeting is to provide an opportunity for interested aviation weather users to provide input on FAA's plans for implementing new weather products.

DATES: The meeting will be held at 1 p.m. to 5 p.m. on October 22, 2002.

ADDRESSES: The meeting will be held in the Horizon Room at the Hilton Palm Springs Resort, 400 East Tahquitz Canyon Way, Palm Springs, California 92262 in conjunction with the Aircraft Owners and Pilots (AOPA) Expo '02.

FOR FURTHER INFORMATION CONTACT: Debi Bacon, Aerospace Weather Policy Division, ARS–100, Federal Aviation Administration, 800 Independence Ave., SW., Washington, DC 20591; telephone number (202) 385–7705; Fax: (202) 385–7701; email: *debi.bacon@faa.gov.* Internet address: *http:\\www.debi.bacon@faa.gov.*

SUPPLEMENTARY INFORMATION:

History

In 1999, the FAA established an Aviation Weather Technology Transfer (AWTT) Board to manage the orderly transfer of weather capabilities and products from research and development into operations. The Director of the Aerospace Weather Policy and Standards Staff, ARS–20, chairs the AWTT Board. The board is composed of stakeholders in Air Traffic Services, ATS; Regulation and Certification, AVR; and Research and Acquisitions, ARA in the Federal Aviation Administration and the Office of Climate, Water and Weather Services, OS and the Office of Science and Technology, OST in the National Weather Service.

The AWTT Board meets semi-annually or as needed, to determine the readiness of weather research and development (R&D) products for experimental use, full operational use for meteorologists or full operational use for end users. The board's determinations will be based upon criteria in the following areas: users needs; benefits; costs; risks; technical readiness; operational readiness and budget requirements.

The user interface process is designed to allow FAA to both report progress and receive feedback from industry users. Each AWTT board meeting will be preceded by a half-day industry review session approximately one month prior to each board meeting. These industry review sessions will be announced in the **Federal Register** and open to all interested parties.

This meeting is the industry review session intended to receive feedback on a weather R&D product that will be presented for consideration at the November 2002 AWTT Board meeting. The product to be considered is the Integrated Turbulence Forecast Algorithm (ITFA).

Meeting Procedures

(a) The meeting will be informal in nature and will be conducted by representatives of the FAA Headquarters.

(b) The meeting will be open to all persons on a space-available basis. Every effort was made to provide a meeting site with sufficient seating capacity for the expected participation. There will be neither admission fee nor other charge to attend and participate. This meeting is being held in conjunction with the AOPA Expo '02. There is a charge to attend the AOPA Expo '02; however, any person attending this informal meeting only will be admitted by AOPA conference officials, to this meeting only, at no charge.

(c) FAA personnel present will conduct a briefing on how the AWTT system works and changes to the process made in the last year. Any person will be allowed to ask questions during the presentation and FAA personnel will clarify any part of the process that is not clear.

(d) FAA personnel will present a briefing on the specific product to be reviewed at the November 2002 AWTT Board Meeting. Any person will be allowed to ask questions during the presentation and FAA personnel will clarify any part of the presentation that is not clear.

(e) Any person present may give feedback on the product to be presented. Feedback on the proposed product will be captured through discussion between FAA personnel and any persons attending the meeting. The meeting will not be formally recorded. However, informal tape recordings may be made of the presentations to ensure that each respondent's comments are noted accurately.

(f) An official verbatim transcript or minutes of the informal meeting will not be made. However, a list of the attendees, a digest of discussions during the meeting and an action item list will be produced. Any person attending may receive a copy of the written information upon request to the information contact, above.

(g) Every reasonable effort will be made to hear each person's feedback consistent with a reasonable closing time for the meeting. Written feedback may also be submitted to FAA personnel for up to seven (7) days after the close of the meeting.

Agenda

(a) Opening Remarks and Discussion of Meeting Procedures.

(b) Briefing on AWTT Process.

(c) Briefing on Weather Products.

(d) Request for User Input.

(e) Closing Comments.

Issued in Washington, DC, on September 20, 2002.

Anthony W. Johnson,

Acting Deputy Director, Aerospace Weather Policy and Standards Staff.

[FR Doc. 02–24670 Filed 10–1–02; 8:45 am]

BILLING CODE 4910–13–M

DEPARTMENT OF TRANSPORTATION

Federal Aviation Administration

Proposed Technical Standard Order (TSO) C–154, Universal Access Transceiver Equipment

AGENCY: Federal Aviation Administration (DOT)

ACTION: Notice of availability and requests for public comment.

SUMMARY: This notice announces the availability of and requests comments on a proposed Technical Standard Order (TSO) C–154, Universal Access Transceiver (UAT) Automatic Dependent Surveillance—Broadcast (ADS–B) Equipment Operating on the Frequency of 978 MHz. This draft TSO tells persons seeking a TSO authorization or letter of design approval what minimum performance standards (MPS) their UAT equipment must meet to be identified with the applicable TSO marking.

DATES: Comments must identify the TSO file number and be received on or before October 22, 2002.

ADDRESSES: Send all comments on the proposed technical standard order to: Technical Programs and Continued Airworthiness Branch, AIR–120, Aircraft Engineering Division, Aircraft Certification Service—File No. TSO–C154, Federal Aviation Administration, 800 Independence Avenue, SW., Washington, DC 20591. Or deliver comments to: Federal Aviation Administration, Room 815, 800 Independence Avenue, SW., Washington, DC 20591.

FOR FURTHER INFORMATION CONTACT: Ms. Bobbie J. Smith, Technical Programs and Continued Airworthiness Branch, AIR–120, Aircraft Engineering Division, Aircraft Certification Service, Federal Aviation Administration, 800 Independence Avenue, SW., Washington, DC 20591, Telephone (202) 267–9546.

SUPPLEMENTARY INFORMATION:

Comments Invited

Interested persons are invited to comment on the proposed TSO listed in this notice by submitting such written data, views, or arguments as they desire to the above specified address. Comments received on the proposed technical standard order may be examined, before and after the comment closing date, in Room 815, FAA Headquarters Building (FOB–10A), 800 Independence Avenue, SW., Washington, DC 20591, weekdays except Federal holidays, between 8:30 a.m. and 4:30 p.m. All communications received on or before the closing date for comments specified above will be considered by the Director of the Aircraft Certification Service before issuing the final TSO.

Background

This proposed TSO prescribes the minimum standards for airborne equipment to support Automatic Dependent Surveillance—Broadcast (ADS–B) using Universal Access Transceiver (UAT) equipment operating on the frequency of 978 MHz. ADS–B is a system by which aircraft and certain equipped surface vehicles can share position, velocity, and other information with one another (and also with ground-based facilities such as air traffic services) via radio broadcast techniques. UTA is a multi-purpose aeronautical datalink system intended to support not only ADS–B, but also Flight Information Service—Broadcast (FIS–B), Traffic Information Service—Broadcast (TIS–B), and supplementary ranging and positioning capabilities. Two major classes of UAT equipment are supported by this TSO; Class A( ) equipment which incorporates both a broadcast and receive subsystem, and Class B( ) equipment which supports broadcast only.

How To Obtain Copies

A copy of the proposed TSO–C154 may be obtained via the information contained in section titled ''For Further Information Contact'', or from the FAA Internet web site at *http://www.faa.govcertification/aircraft/tsoa.htm.* Copies of RTCA Document No's. RTCA/DO–160D, ''Environmental Conditions and Test Procedures for Airborne Equipment,'' dated July 29, 1997; RTCA/DO–178B, ''Software Considerations in Airborne Systems and Equipment Certification,'' dated December 1, 1992; RTCA Document No. DO–242A, ''Minimum Aviation System Performance Standards for Automatic Dependant Surveillance-Broadcast (ADS–B)'' dated June 25, 2002; and RTCA/DO–282, ''Minimum Operational Performance Standards for Universal Access Trnasceiver (UAT) Automatic Dependant Surveillance—Broadcast (ADS–B)'' dated August 27, 2002, may be purchased from RTCA, Inc., 1828 L Street, NW., Suite 815, Washington, DC 20036. Copies can also be obtained through the RTCA Internet web site at *http://www.rtca.org/*

Issued in Washington, DC, on September 19, 2002.

Stephen P. Van Trees,

Acting Manager, Aircraft Engineering Division, Aircraft Certification Service.

[FR Doc. 02–25052 Filed 10–1–02; 8:45 am]

BILLING CODE 4910–13–M

DEPARTMENT OF TRANSPORTATION

Federal Transit Administration

Transfer of Federally Assisted Land or Facility

AGENCY: Federal Transit Administration, DOT

ACTION: Notice of intent to transfer federally assisted land or facility.

SUMMARY: Section 5334(g) of the Federal Transit Laws, as codified, 49 U.S.C. 5301, et seq., permits the Administrator of the Federal Transit Administration (FTA) to authorize a recipient of FTA funds to transfer land or a facility to a public body for any public purpose with no further obligation to the Federal Government if, among other things, no Federal agency is interested in acquiring the asset for Federal use. Accordingly, FTA is issuing this Notice to advise Federal agencies that the City and County of Honolulu Department of Transportation Services intends to transfer a vacant parcel of land without structures to Honolulu's Department of Facility Maintenance to use as a refueling station for city vehicles. The parcel was formerly used as a bus terminus facility and consists of approximately 12,800 square feet of land fronting Umi Street in Honolulu, Hawaii across the street from the Kalihi Shopping Center situated within an area zoned IMX–1 for industrial-commercial mixed use.

EFFECTIVE DATE: Any Federal agency interested in acquiring the land or facility must notify the FTA Region IX Office of its interest by November 1, 2002.

ADDRESSES: Interested parties should notify the Regional Office by writing to Leslie T. Rogers, Regional Administrator, Federal Transit Administration, 201 Mission Street, Suite 2210, San Francisco, CA 94105.

FOR FURTHER INFORMATION CONTACT: Edward Carranza, Director of Office of Program Management at (415) 744–3118.

SUPPLEMENTARY INFORMATION:

Background

49 U.S.C. section 5334(g) provides guidance on the transfer of capital assets. Specifically, if a recipient of FTA assistance decides an asset acquired under this chapter at least in part with that assistance is not longer needed for the purpose for which it was acquired, the Secretary of Transportation may authorize the recipient to transfer the asset to a local government authority to be used for a public purpose with no further obligation to the Government. 49 U.S.C. section 5334(g)(1).

Determinations

The Secretary may authorize a transfer for a public purpose other than mass transportation only if the Secretary decides:

(A) The asset will remain in public use for at least 5 years after the date the asset is transferred;

(B) There is no purpose eligible for assistance under this chapter for which the asset should be used;

(C) The overall benefit of allowing the transfer is greater than the interest of the Government in liquidation and return of the financial interest of the Government in the asset, after considering fair market value and other factors; and

(D) Through an appropriate screening or survey process, that there is no interest in acquiring the asset for Government use if the asset is a facility or land.

Federal Interest in Acquiring Land or Facility

This document implements the requirements of 49 U.S.C. section 5334(G)(1)(D) of the Federal Transit Laws. Accordingly, FTA hereby provides notice of the availability of the land or facility further described below. Any Federal agency interested in acquiring the affected land or facility should promptly notify the FTA.

If no Federal agency is interested in acquiring the existing land or facility, FTA will make certain that the other requirements specified in 49 U.S.C. section 5334(g)(1)(A) through (C) are met before permitting the asset to be transferred.

Additional Description of Land or Facility

The property is an unused, vacant but terminus, consisting of an approximately 12,800 square foot parcel of land fronting Umi Street in Honolulu, Hawaii. The property is situated within an area zoned IMX–1 for industrial-commercial mixed use. The parcel is located across the street from the Kalihi Shopping Center and a one-family housing unit. A one-family housing unit to the north and Verizon Hawaii's property to the east and south border it. Office buildings are on Verizon Hawaii's site.

The Umi Street property was previously used as a municipal transit bus terminus. It is presently vacant without any building structures. An existing concrete pavement bus turnaround driveway is situated on the front half of the property. The concrete pavement is in good condition. The rear portion of the parcel does not have any improvements and is overgrown with vegetation. The property frontage along Umi Street is open. A concrete block wall and chain link fence separates the property's perimeter adjoining the residential and Verizon Hawaii properties.

Issued on: September 16, 2002.

Leslie T. Rogers,

Regional Administrator.

[FR Doc. 02–25046 Filed 10–1–02; 8:45 am]

BILLING CODE 4910–57–M

DEPARTMENT OF TRANSPORTATION

[Docket: RSPA–98–4957]

Request for Extension of Existing Information Collection

AGENCY: Research and Special Programs Administration, DOT.

ACTION: Notice and request for public comments.

SUMMARY: In accordance with the Paperwork Reduction Act of 1995, this notice announces the Research and Special Programs Administration's (RSPA) intention to request extension of an information collection in support of the Office of Pipeline Safety (OPS) for Response Plans for Onshore Oil Pipelines. (approval number 2137–0589.) Operators are invited to submit comments on whether collecting information on response plans for onshore oil pipelines is burdensome, and other factors explained in the body of this notice.

DATES: Comments on this notice must be received by December 2, 2002 to be assured of consideration.

ADDRESSES: Copies of this information collection can be reviewed at the Dockets Facility, Plaza 401, U.S. Department of Transportation, 400 Seventh St., SW., Washington, DC 20590, Monday to Friday from 10 a.m. to 4 p.m. excluding Federal holidays. Comments can be reviewed electronically on the worldwide web at *dms.dot.gov.*

FOR FURTHER INFORMATION CONTACT: Marvin Fell, Office of Pipeline Safety, Research and Special Programs Administration, Department of Transportation, 400 Seventh Street, SW., Washington, DC 20950, (202) 366–6205 or by electronic mail at *Marvin.fell@rspa.dot.gov.*

SUPPLEMENTARY INFORMATION:

Title: Response Plans for Onshore Oil Pipelines.

OMB Number: 2137–0589.

Type of Request: Extension of an existing information collection.

Abstract: The Oil Pollution Act of 1990 (OPA 90) requires that operators of onshore oil pipelines develop response plans to minimize the impact of an oil discharge in the case of an accident. These response plans enhance the spill response capability of pipeline operators. Operators may submit their plan electronically or in hard copy.

Respondents: Oil Pipeline operators.

Estimated Number of Respondents: 233.

Hours per Operator or Respondent: 127.8.

Estimated Total Annual Burden on Respondents: 29,780 hours annually.

Frequency: Every five years.

Use: To enhance response capability in the event of an oil spill.

Regulation or Subpart: 49 CFR part 194.

Comments are invited on: (a) The need for the proposed collection of information for the proper performance of the functions of the agency, including whether the information will have practical utility; (b) the accuracy of the agency's estimate of the burden of the proposed collection of information including the validity of the methodology and assumptions used; (c) ways to enhance the quality, utility and clarity of the information to be collected; and (d) ways to minimize the burden of the collection of information on those who are to respond, including the use of appropriate automated, electronic, mechanical, or other technological collection techniques. Send written comments in duplicate to Dockets Facility, Plaza 401, U.S. Department of Transportation, 400 Seventh St., SW., Washington, DC 20590. Please include the docket number in your comments. Comments can also be sent electronically to *dms.dot.gov.*

All responses to this notice will be summarized and included in the request for OMB approval. All comments will also be a matter of public record.

Issued in Washington, DC, on September 26, 2002.

Jeffrey D. Wiese,

Manager, Program Development, Office of Pipeline Safety.

[FR Doc. 02–25045 Filed 10–1–02; 8:45 am]

BILLING CODE 4910–60–P

DEPARTMENT OF TRANSPORTATION

Surface Transportation Board

[STB Finance Docket No. 34250]

Almono LP—Acquisition and Operation Exemption—Line of Monongahela Connecting Railroad Company

Almono LP (Almono), a noncarrier, has filed a verified notice of exemption under 49 CFR 1150.31 to acquire and operate approximately 2 miles of rail line of the Monongahela Connecting Railroad Company (Mon Con) in Allegheny County, PA.[1] The line extends between the plant of the sole shipper on the line (MetalTech) on the north side of the Monongahela River and an interchange point with CSX Transportation, Inc. (CSXT) north of CSXT's Glenwood Yard in Hazelwood, PA. Almono states that the line does not have milepost designations.[2]

The transaction was expected to be consummated on or shortly after September 12, 2002. Almond certifies that its projected annual revenues do not exceed those that would qualify it as a Class III carrier.

If the verified notice contains false or misleading information, the exemption is void *ab initio.* Petitions to reopen the proceeding to revoke the exemption under 49 U.S.C. 10502(d) may be filed at any time. The filing of a petition to revoke will not automatically stay the transaction.

An original and 10 copies of all pleadings, referring to STB Finance Docket No. 34250, must be filed with the Surface Transportation Board, 1925 K Street, NW., Washington, DC 20423–0001. In addition, a copy of each pleading must be served on Linda B. McClintock, Two Gateway Center, Pittsburgh, PA 15222, Robert D. Rosenberg, 1224 17th Street, NW., Washington, DC 20036, and Frank Brooks Robinson, 425 Sixth Avenue, Suite 500, Pittsburgh, PA 15219.

Board decisions and notices are available on our Web site at *www.stb.dot.gov.*

Decided: September 25, 2002.

By the Board, David M. Konschnik, Director, Office of Proceedings.

Vernon A. Williams,

Secretary.

[FR Doc. 02–24865 Filed 10–1–02; 8:45 am]

BILLING CODE 4915–00–P

[1] Almono states that Mon Con is a wholly owned subsidiary of LTV Steel Corporation (LTV), which is in bankruptcy and is liquidating its assets. Almono indicates that it is acquiring Mon Con's assets as well as adjoining LTV property with court approval.

[2] Almono states that it intends to seek abandonment of the acquired line shortly after consummation of the transaction. It adds that, although its primary interest is in the underlying real estate and not the railroad operation, it has reached an agreement with MetalTech under which the shipper would continue to receive rail service following abandonment. Acquisitions of active rail lines under 49 U.S.C. 10901 are supposed to be for continued rail use. *See, e.g., Land Conservancy—Acq. and Oper.—Burlington Northern,* 2 S.T.B. 673 (1997), reconsideration denied, STB Finance Docket No. 33389 (STB served May 13, 1998), *pet. for judicial review dismissed sub nom. The Land Conservancy of Seattle and King County* v. *S.T.B.,* 238 F.3d 429 (9th Cir. 2000). If Almono elects to file for abandonment authority, it must submit evidence showing that abandonment of the line is warranted under the Board's statutory authority and rules, and must, under these circumstances, demonstrate (*e.g.*, by providing the parties' agreement or a statement from MetalTech) that the interests of the shipper here will be protected.

DEPARTMENT OF THE TREASURY

Submission for OMB Review; Comment Request

September 16, 2002.

The Department of Treasury has submitted the following public information collection requirement(s) to OMB for review and clearance under the Paperwor Reduction Act of 1995, Pub. L. 104–13. Copies of the submission(s) may be obtained by calling the Treasury Bureau Clearance Officer listed. Comments regarding this information collection should be addressed to the OMB reviewer listed and to the Treasury Department Clearance Officer, Department of the Treasury, Room 2110, 1425 New York Avenue, NW., Washington DC 20220.

DATES: Written comments should be received on or before November 1, 2002 to be assured of consideration.

Bureau of Alcohol, Tobacco and Firearms (BATF)

OMB Number: 1512–0398.

Form Number: ATF Forms 2093 (5200.3), 2098 (5200.16) 5230.4 and 5230.5.

Type of Review: Revision.

Title: Applciations for Tobacco Products and for Cigarette papers and Tubes.

Description: The forms are used by the tobacco industry members to obtain and amend permits necessary to engage in business as a manufacturer of tobacco products, importer of tobacco products, or proprietor of a export warehouse.

Respondents: Business or other for-profit, State, Local or Tribal Government.

Estimated Number of Respondents: 630.

Estimated Burden Hours Per Respondent:

	Hours
ATF F 2093 (5200.3)	2
ATF F 2098 (5200.16)	1
ATF F 5230.4	2
ATF F 5230.5	1

Frequency of Response: On occassion.

Estimated Total Reporting Burden: 1,130 hours.

Clearance Officer: Jacqueline White (202) 927–8930, Bureau of Alcohol, Tobacco and Firearms, Room 3200, 650 Massachusetts Avenue, NW., Washington, DC 20226.

OMB Reviewer: Joseph F. Lackey, Jr. (202) 395–7316, Office of Management and Budget, Room 10235, New Executive Office Building, Washington, DC 20503.

Lois K. Holland,

Departmental Reports, Management Officer.

[FR Doc. 02–24974 Filed 10–1–02; 8:45 am]

BILLING CODE 4810–31–M

DEPARTMENT OF THE TREASURY

Submission for OMB Review; Comment Request

September 20, 2002.

The Department of Treasury has submitted the following public information collection requirement(s) to OMB for review and clearance under the Paperwork Reduction Act of 1995, Public Law 104–13. Copies of the submission(s) may be obtained by calling the Treasury Bureau Clearance Officer listed. Comments regarding this information collection should be addressed to the OMB reviewer listed and to the Treasury Department Clearance Officer, Department of the Treasury, Room 2110, 1425 New York Avenue, NW, Washington, D.C. 20220.

DATES: Written comments should be received on or before November 1, 2002 to be assured of consideration.

Bureau of Engraving and Printing (BEP)

OMB Number: 1520–0001.

Form Number: BEP 5283.

Type of Review: Extension.

Title: Owner's Affidavit of Partial Destruction of Mutilated Currency.

Description: The Office of Currency Redemption and Destruction Standards, Bureau of Engraving and Printing, requests owners of partially destroyed

U.S. currency to complete a notarized affidavit (Form BEP 5283) for each claim submitted when submitted when substantial portions of notes are missing.

Respondents: Individuals or households.

Estimated Number of Respondents: 300.

Estimated Burden Hours Per Response: 36 minutes.

Frequency of Response: On occasion.

Estimated Total Reporting Burden: 180 hours.

Clearance Officer: Pam Corsini, (202) 874–2647, Bureau of Engraving and Printing, Room 3.2.C, Engraving and Printing Annex, 14th and C Streets, SW, Washington, DC 20228.

OMB Reviewer: Alexander T. Hunt, (202) 395–7860, Office of Management and Budget, Room 10202, New Executive Office Building, Washington, DC 20503.

Lois K. Holland,

Departmental Reports, Management Officer.

[FR Doc. 02–24975 Filed 10–1–02; 8:45 am]

BILLING CODE 4840–01–P

DEPARTMENT OF THE TREASURY

Office of the Comptroller of the Currency

Office of Thrift Supervision

Federal Deposit Insurance Corporation

Agency Information Collection Activities: Submission for OMB Review; Comment Request

AGENCIES: Office of the Comptroller of the Currency (OCC) and Office of Thrift Supervision (OTS), Treasury; and Federal Deposit Insurance Corporation (FDIC).

ACTION: Joint notice and request for comment.

SUMMARY: The OCC, FDIC, and OTS (collectively, the Agencies), hereby give notice that they are submitting the information collections contained in their respective Community Reinvestment Act regulations to the Office of Management and Budget (OMB), in accordance with the Paperwork Reduction Act of 1995 (44 U.S.C. 3501 *et seq.*). The Agencies may not conduct or sponsor, and a respondent is not required to respond to, an information collection unless the information collection displays a currently valid OMB control number.

DATES: You should submit your comments to the Agencies and the OMB Desk Officer by November 1, 2002.

ADDRESSES: You should direct comments to:

OCC: Public Information Room, Office of the Comptroller of the Currency, Mailstop 1–5, Attention: 1557–0160, 250 E Street, SW., Washington, DC 20219. Due to delays in the OCC's mail service since September 11, 2001, commenters are encouraged to submit comments by fax or e-mail. Comments may be sent by fax to (202) 874–4448, or by e-mail to *regs.comments@occ.treas.gov.* You can inspect and photocopy the comments at the OCC's Public Information Room, 250 E Street, SW., Washington, DC 20219. You can make an appointment to inspect the comments by calling (202) 874–5043.

FDIC: Tamara Manly, Management Analyst, Legal Division, Room MB–3109, Attention: Comments/Legal, Federal Deposit Insurance Corporation, 550 17th Street, NW., Washington, DC 20429. All comments should refer to ''Community Reinvestment Act Regulation, 3064–0092.'' Comments may be hand-delivered to the guard station at the rear of the 550 17th Street Building (located on F Street), on business days between 7:00 a.m. and 5:00 p.m. [Fax number (202) 898–3838; Internet address: *comments@fdic.gov*]. Comments may be inspected and photocopied in the FDIC Public Information Center, Room 100, 801 17th Street, NW., Washington, DC between 9:00 a.m. and 4:30 p.m. on business days.

OTS: Send comments, referring to the collection by title of the proposal or by OMB approval number to Information Collection Comments, Chief Counsel's Office, Office of Thrift Supervision, 1700 G Street, NW., Washington, DC 20552. Comments may also be sent by fax to (202) 906–6518, or by e-mail to *infocollection.comments@ots.treas.gov.* OTS will post comments and the related index on the OTS Internet Site at *www.ots.treas.gov.* In addition, interested persons may inspect comments at the Public Reading Room, 1700 G Street, NW., by appointment. To make an appointment, call (202) 906–5922, send an e-mail to *publicinfo@ots.treas.gov,* or send a facsimile transmission to (202) 906–7755.

OMB Desk Officers for the Agencies: Joseph F. Lackey, Jr., Office of Information and Regulatory Affairs, Office of Management and Budget, New Executive Office Building, Room 10235, Washington, DC 20503, or e-mail to *jlackeyj@omb.eop.gov.*

FOR FURTHER INFORMATION CONTACT: You can request additional information from:

OCC: Jessie Dunaway, OCC Clearance Officer, (202) 874–4824, or Camille Dixon, (202) 874–5090, Legislative and Regulatory Activities Division, Office of the Comptroller of the Currency, 250 E Street, SW., Washington, DC 20219.

FDIC: Tamara Manly, Management Analyst, (202) 898–7453, Legal Division, Federal Deposit Insurance Corporation, 550 17th Street, NW., Washington, DC 20429.

OTS: Marilyn K. Burton, Clearance Officer, (202) 906–6467, Regulations and Legislation Division, Chief Counsel's Office, Office of Thrift Supervision, 1700 G Street, NW., Washington, DC 20552; by e-mail to *marilyn.burton@ots.treas.gov;* or by facsimile transmission to (202) 906–6518.

SUPPLEMENTARY INFORMATION:

Comments: On May 30, 2002, the OCC, Board of Governors of the Federal Reserve Board, FDIC, and OTS published a joint request for comments on the proposed extension, without change, of OMB approval of the information collections contained in the CRA regulations (67 FR 37915).

The FDIC and OTS each received an identical comment from the same commenter. This commenter did not object to the proposed extension of OMB approval of the information collections contained in the CRA regulations. The commenter recommended that the Agencies (1) continue all existing data collection and reporting requirements; (2) maintain current public file requirements; and (3) do not consider or require any race data under CRA. Since these recommendations are not contrary to the proposed extension of OMB approval of the CRA information collections, the Agencies have not made any changes from the proposal in response to this comment.

Title:

OCC: Community Reinvestment Act Regulation—12 CFR part 25;

FDIC: Community Reinvestment Act;

OTS: Community Reinvestment Act.

OMB Control Numbers:

OCC: 1557–0160;

FDIC: 3064–0092;

OTS: 1550–0012.

Type of Review: Extension, without change, of a currently approved collection.

Form Number: None.

Abstract: This submission covers an extension of the Agencies' currently

approved information collections in their CRA regulations (12 CFR part 25 (OCC), 12 CFR part 345 (FDIC), and 12 CFR part 563e (OTS)). The submission involves no change to the regulations or to the information collections.

The Agencies need the information collected to fulfill their obligations under the CRA (12 U.S.C. 2901 *et seq.*) to evaluate and assign ratings to the performance of institutions, in connection with helping to meet the credit needs of their communities, including low- and moderate-income neighborhoods, consistent with safe and sound banking practices. The Agencies use the information in the examination process and in evaluating applications for mergers, branches, and certain other corporate activities. Financial institutions maintain and provide the information to the Agencies.

Affected Public: Businesses or other for-profit.

Estimated Number of Respondents:
OCC: 2,141;
FDIC: 5,484;
OTS: 995.

Estimated Annual Responses:
OCC: 2,141;
FDIC: 5,484;
OTS: 995.

Estimated Annual Burden Hours:
OCC: 322,307;
FDIC: 607,603;
OTS: 200,964.

Frequency of Response: Annually.

Dated: September 25, 2002.

Mark J. Tenhundfeld,

Assistant Director, Legislative and Regulatory Activities Division, Office of the Comptroller of the Currency.

Dated at Washington, DC, this 25th day of September, 2002.

Federal Deposit Insurance Corporation.

Robert E. Feldman,

Executive Secretary.

Dated: September 24, 2002.

Deborah Dakin,

Deputy Chief Counsel, Regulations and Legislation Division, Office of Thrift Supervision.

[FR Doc. 02–24977 Filed 10–1–02; 8:45 am]

BILLING CODE 4810–33–P, 6741–01–P, 6720–01–P

DEPARTMENT OF LABOR

Office of the Assistant Secretary for Veterans' Employment and Training

Secretary of Labor's Advisory Committee for Veterans' Employment and Training; Notice of Open Meeting

The Secretary's Advisory Committee for Veterans' Employment and Training was established under section 4110 of title 38, United States Code, to bring to the attention of the Secretary, problems and issues relating to veterans' employment and training.

Notice is hereby given that the Secretary of Labor's Advisory Committee for Veterans' Employment and Training will meet on Thursday, October 17, 2002, beginning at 9 a.m. at the U.S. Department of Labor, 200 Constitution Avenue, NW., Room S–2508, Washington, DC 20210.

Written comments are welcome and may be submitted by addressing them to: Mr. John Muckelbauer, Designated Federal Official, Office of the Assistant Secretary for Veterans' Employment and Training, U. S. Department of Labor, 200 Constitution Avenue, NW., Room S–1325, Washington, DC 20210.

The primary items on the agenda are:

Discussion of the Transition Assistance Program;

Discussion on Licensing and Certification;

Discussion of other programs and activities of interest to the Committee.

The meeting will be open to the public.

Persons with disabilities needing special accommodations should contact Mr. John Muckelbauer at telephone number 202/693–4700 no later than Wednesday, October 16, 2002.

Signed at Washington, DC, this September 26, 2002.

Frederico Juarbe, Jr.,

Assistant Secretary of Labor for Veterans' Employment and Training.

[FR Doc. 02–24997 Filed 10–1–02; 8:45 am]

BILLING CODE 4510–79–P

Federal Register

Wednesday,
October 2, 2002

Part II

Department of Health and Human Services

Centers for Medicare and Medicaid Services

42 CFR Part 457

State Children's Health Insurance Program; Eligibility for Prenatal Care and Other Health Services for Unborn Children; Final Rule

DEPARTMENT OF HEALTH AND HUMAN SERVICES

Centers for Medicare and Medicaid Services

42 CFR Part 457

[CMS–2127–F]

RIN 0938–AL37

State Children's Health Insurance Program; Eligibility for Prenatal Care and Other Health Services for Unborn Children

AGENCY: Centers for Medicare & Medicaid Services (CMS), HHS.

ACTION: Final rule.

SUMMARY: In order to provide prenatal care and other health services, this final rule revises the definition of ''child'' under the State Children's Health Insurance Program (SCHIP) to clarify that an unborn child may be considered a ''targeted low-income child'' by the State and therefore eligible for SCHIP if other applicable State eligibility requirements are met. Under this definition, the State may elect to extend eligibility to unborn children for health benefits coverage, including prenatal care and delivery, consistent with SCHIP requirements.

EFFECTIVE DATE: These regulations are effective on November 1, 2002.

FOR FURTHER INFORMATION CONTACT: Kathleen Farrell, (410) 786–1236.

SUPPLEMENTARY INFORMATION: *Copies:* To order copies of the **Federal Register** containing this document, send your request to: New Orders, Superintendent of Documents, PO Box 371954, Pittsburgh, PA 15250–7954. Specify the date of the issue requested and enclose a check or money order payable to the Superintendent of Documents, or enclose your Visa or Master Card number and expiration date. Credit card orders can also be placed by calling the order desk at (202) 512–1800 or by faxing to (202) 512–2250. The cost for each copy is $9. As an alternative, you can view and photocopy the **Federal Register** document at most libraries designated as Federal Depository Libraries and at many other public and academic libraries throughout the country that receive the **Federal Register**.

This **Federal Register** document is also available from the **Federal Register** online database through GPO access, a service of the U.S. Government Printing Office. The Web site address is *http://www.access.gpo.gov/nara/index.html*.

I. Background

Section 4901 of the Balanced Budget Act, (Pub. L. 105–33), as amended by Public Law 105–100, added title XXI to the Act. Title XXI authorizes the State Children's Health Insurance Program (SCHIP) to assist State efforts to initiate and expand the provision of child health assistance to uninsured, low-income children. Under title XXI, States may provide child health assistance primarily for obtaining health benefits coverage through (1) a separate child health program that meets the requirements specified under section 2103 of the Act; (2) expanding eligibility for benefits under the State's Medicaid plan under title XIX of the Act; or (3) a combination of the two approaches. To be eligible for funds under this program, States must submit a State child health plan (State plan), that meets the applicable requirements of title XXI and is approved by the Secretary.

Benefits under SCHIP are jointly financed by the Federal and State governments and are administered by the States. Within broad Federal guidelines, each State determines the design of its program, eligibility groups, benefit packages, payment levels for coverage, and administrative and operating procedures. Under section 2102(b) of the Act, States have discretion to adopt eligibility standards that are related to age, and thus may extend SCHIP eligibility only to certain age groups of targeted low-income children (who must be under age 19). SCHIP provides a capped amount of funds to States on a matching basis for Federal fiscal years (FY) 1998 through 2007. Regulations implementing SCHIP are set forth at 42 CFR 457.

II. Provisions of the Proposed Regulations

On March 5, 2002, we published a proposed rule in the **Federal Register** that proposed to revise the definition of ''child'' under the SCHIP program (67 FR 9936). In the interest of providing necessary prenatal care and other health services to children, we proposed to clarify and expand the definition of the term ''child'' so that a State may elect to make individuals in the period between conception and birth eligible for coverage under the State plan. Specifically, we proposed to revise the definition at § 457.10 to clarify that ''child'' means an individual under the age of 19 and may include any period of time from conception to birth up to age 19. In this rule, we explained that while a pregnant woman under age 19 could be eligible as a targeted low-income child, and her child would benefit from needed prenatal care and delivery services by virtue of the mother's eligibility status, a pregnant woman over age 19 could not be eligible as a targeted low-income child.

We stated that the proposed definition would provide States with the option to consider an unborn child to be a targeted low-income child and therefore eligible for SCHIP if other applicable State eligibility requirements are met. This would permit States to ensure that needed services are available to benefit unborn children independent of the mother's eligibility status. We also discussed in detail the Department's 1999 report, *Trends in the Well-Being of America's Children and Youth*, which describes the benefits of prenatal care for the mother and the child. We stated that our proposed revisions were intended to benefit both the unborn children and their mothers by promoting continuity of important medical care.

In order to protect against the substitution of title XXI enhanced payments for Medicaid payments, we proposed to add a new paragraph (a)(3) to § 457.626(a), Prevention of duplicate payments, to clarify that payment is not available under title XXI when payment may be reasonably expected to be made under Medicaid on the basis of the Medicaid eligibility or enrollment of the pregnant woman.

With regard to maintenance of effort requirements, we proposed that if a State elects to include unborn children in the SCHIP definition of children, the State must also apply that same interpretation in assessing compliance with the Medicaid maintenance of effort provision of section 2105(d)(1) of the Act. Specifically, we proposed to revise § 457.622, Rate of Federal Financial Participation (FFP) for State expenditures, to provide that the State does not adopt eligibility standards and methodologies for purposes of determining a child's eligibility under the Medicaid State plan that were more restrictive than those applied under policies of the State plan in effect on June 1, 1997. This limitation applies also to more restrictive standards and methodologies for determining eligibility for services for a child based on the eligibility of a pregnant woman.

We also stated that, a State that defines children under SCHIP to include unborn children would need to apply the same definition in the screen-and-enroll process described in SCHIP regulations at § 457.350, Eligibility screening and facilitation of Medicaid enrollment. We proposed to add a new § 457.350(b)(2) to clarify that screening

procedures must identify any applicant or enrollee who would be potentially eligible for Medicaid services based on the eligibility of his or her mother under one of the poverty level groups described in section 1902(l) of the Act, section 1931 of the Act, or a Medicaid demonstration project approved under section 1115 of the Act.

We noted that under our proposed regulation, States would continue to have the authority to set eligibility requirements under their State plans, including age limits so long as the age limit is under 19 years of age. Hence, States would not be required to extend coverage to this population. States that opt to extend eligibility to unborn children must submit a State plan amendment in accordance with § 457.60. States can use the preprinted application template for the State Children's Health Insurance Program, sections 4.1.2 and 4.4, and the preprinted budget template in submitting this State plan amendment.

III. Analysis of and Responses to Public Comments

We received and accepted 7,783 comments. The majority of these were form letters that were part of write-in campaigns. Because of possible residual delays in the Washington, DC mail, resulting from new security procedures, we accepted comments that were postmarked up to and including May 13, 2002. All public comments have been summarized and are discussed in detail in the following discussion.

1. General Comments

In this section, we have summarized and responded to general public comments on the program or the proposed rule as a whole and not to any particular provision of this rule. All other public comments are addressed below in the context of the particular subpart.

Comment: We received a great number of comments from people who viewed the proposed rule as having a hidden agenda of providing unborn children with formal legal rights as the first step in abolishing abortion.

Commenters stated that since the child in the womb would be recognized as a patient, there would never be a case where abortion is justified. Another commenter stated that the unborn child's status as a patient in need of health care has long enjoyed international recognition and cited the United Nations Declaration on the Rights of the Child and the 1990 Convention implementing its principles, which declared that the child needs special safeguards and care, including appropriate legal protection, before as well as after birth. Other commenters viewed the proposed rule as empowering lower-income women to choose life for their children and enhance their ability to raise their families with dignity.

Many commenters expressed opposing views on this issue, saying that this is an anti-choice proposal disguised as a health care proposal. Commenters considered the proposal as the Administration's attempt to create legal precedent for viewing unborn children as separate physical and legal entities, which they believe devalues women as persons and is counterproductive to the health and well being of both women and children. Commenters stated that the underlying purpose of the proposed rule is to advance fetal personhood and deny the right of every woman to determine the direction of her own life. They believe the proposed rule would undermine the foundation of the right to choose abortion and threatens a woman's reproductive freedom. They said the proposed rule would lay the legal groundwork for an adversarial relationship between a woman and her unborn child.

Commenters expressed the opinion that the proposed rule is a tactic for extending the rights of a person under the constitution to an unborn child through the regulatory process as a means of circumventing the legislative process where it can be debated and voted on openly by elected representatives. Many commenters considered the proposed rule an attempt to provoke controversy over *Roe* v. *Wade* and provide the groundwork for having it overturned with the long-term goal of having abortion declared illegal.

Response: CMS does not believe that this revised definition of ''child'' is inconsistent with the United Nations Declaration on the Rights of the Child or with *Roe* v. *Wade*.

At the core of a number of commenters' arguments against the rule is a fundamental misconception that this rule would set up an adversarial relationship between the mother and her unborn child that might threaten the mother's autonomy.

Such reasoning overlooks the reality that the SCHIP program is a voluntary assistance program that begins when an individual applies for the benefit. If the woman did not want the health insurance coverage offered by the State's SCHIP program, she simply would not apply for it or would discontinue her participation in the program.

This rule, rather than limiting an uninsured woman's choices in fact expands them by offering important health care that may not otherwise be available to her.

In general, patient education literature affirms that prenatal care benefits both the mother and the unborn child. For example, the Web site of the American College of Obstetricians and Gynecologists (ACOG) provides excerpts from its patient education material. ACOG Education Pamphlet AP098—Special Tests for Monitoring Fetal Health explains that, ''[e]arly prenatal care gives your doctor a chance to check on your health and the progress of your pregnancy. Based on the results of routine prenatal care, your doctor may suggest tests to check the health of the baby. Most of the time, these tests help assure you and your doctor that all is going well. Monitoring helps you and your doctor during your pregnancy by telling more about the well being of the baby. Monitoring may be done during pregnancy to help assess the health, activity level, and growth of the unborn child. Some of the tests used for monitoring check the movement, heartbeat, blood flow, and rate of growth of the unborn child. If so, the baby may need special care or may need to be delivered right away.''

In another article, ''Nutrition During Pregnancy,'' available through the *Medem.com* Web site, ACOG explains that, ''[a] balanced diet is a basic part of good health at all times in your life. During pregnancy, diet is even more important. The foods you eat are the main source of the nutrients for your baby. As your baby grows, you will need more of most nutrients.''

This rule reflects the common understanding that prenatal care benefits both mother and child and therefore does not create tension between them.

It is also useful to bear in mind that these generally are children who will otherwise be eligible for their respective SCHIP program in a State at birth. It only makes sense, and indeed is medically obvious that establishing eligibility during the prenatal stage advances the likelihood of a healthy pregnancy, healthy birth, and healthy life.

Comment: Many of the commenters asserted that if the intent of the proposed regulation is to provide additional health care to pregnant women, it could be done through existing regulations. Commenters were concerned that the designation of the unborn child as a child would raise legal and operational issues that would take years to resolve, resulting in litigation that would prevent many pregnant women from receiving needed

health care. For this reason, numerous commenters recommended the withdrawal of this rule. One commenter mentioned that for States to adopt this rule, they would be required to act through their State legislatures to redefine a ''child'' as being from conception through age 19, which would cause enormous tension in State capitals across the country and unproductive bipartisan politics, which would not further the health care needs of pregnant women or children.

Since States already have the means to cover pregnant women, the commenter urged HHS to facilitate the process and not complicate it and many commenters stated that they believe the regulation is unnecessary. As examples, commenters cited the States of New Jersey and Rhode Island that have applied for and received section 1115 waivers to expand coverage to low-income women. They noted that SCHIP waivers are relatively easy for States to secure since under the existing SCHIP waiver program, the Federal government does not require ''budget neutrality'', States can spend additional funds up to the State's unspent SCHIP allotment and there is already a template in place to streamline the waiver application process.

Commenters suggested alternative options to HHS rather than implementing the rule that included: use options under Medicaid to provide comprehensive prenatal and pregnancy-related care to women; use the existing authority of approving waivers and implement a process for expediting the approval of waiver applications; amend the SCHIP statute to provide prenatal care for pregnant women by expanding eligibility to the woman rather than to the unborn child; and support and work with the Congress to approve pending legislation that would provide access to prenatal care for uninsured women as well as additional funding for States.

Response: This regulation bridges a gap in eligibility between the Medicaid and the SCHIP programs that has now existed for five years. Members of the Congress have also recognized this gap and have introduced various pieces of legislation over the years to address this gap. The opportunity to expand vital health insurance coverage during a critical time is at hand.

We welcome all of these suggestions for expanding health insurance coverage and indeed States and the Secretary have already used the flexibility in current regulations. However, there are still gaps. We also welcome support for the actions of the Secretary in granting waivers to States that expand eligibility for individuals who would not otherwise be eligible for Medicaid or SCHIP. But the Secretary's ability to intervene through one mechanism (a waiver) should not be the sole option for States and may in fact be an inferior option. Waivers are discretionary on the part of the Secretary and time limited while State plan amendments are permanent, and are subject to allotment neutrality.

Commenters recognize that certain low-income pregnant women are not currently eligible for coverage under either Medicaid or SCHIP. We recognize that States already have the ability to provide prenatal care to pregnant women through expanding their title XIX coverage of pregnant women either through an amendment to their approved State Plan or through a demonstration project under section 1115 of the Act. However, States have been reluctant to do so under the regular Medicaid match rate. It is the enhanced match under title XXI that has proven to be the incentive for States to increase eligibility.

The approval process for a SCHIP demonstration project to extend coverage to pregnant women under section 1115 is a relatively streamlined process. However, as the commenters also acknowledge, only five States have applied to cover pregnant women (Colorado, Maryland, Michigan, New Jersey and Rhode Island) of which two have been approved as of July 2002 (New Jersey and Rhode Island).

States may decide not to pursue this option because of the local political climate, the need for State legislative modifications or a variety of other reasons. Our regulation is simply an option to make it faster and easier for States that want to use SCHIP funds to expand prenatal services for low-income women and to do so without having to go through the 1115 process or wait for the passage of legislation.

With respect to comments relating to potential legislative changes to the Medicaid and SCHIP statute, discussion of such changes are beyond the scope of this regulation.

Comment: One commenter said that another way the Administration could help ensure prenatal care was to change the Medicaid system to make it less confusing and more accessible, by reducing the complexity of the eligibility process, the burdensome application forms and by addressing the lack of knowledge surrounding access and other regulatory barriers that prevent women from accessing this health care insurance.

Response: Many States in fact have taken action to lower barriers to enrollment, renewal, and access. Barriers to enrollment have been one of the major areas CMS has worked on with States in recent years. States were given significant flexibility to simplify the eligibility process in the SCHIP statute and regulations, and CMS has encouraged States to take similar steps within the framework of Medicaid requirements. States have the option to provide presumptive eligibility for pregnant women and the Medicaid regulations have mandated simplification and streamlining of the enrollment process. It is the State's option how they choose to accomplish this. However, administrative simplification has its limits and cannot bridge the eligibility gap as the proposed regulation would.

Comment: A commenter noted that the unborn child was a feature of the Medicaid program until 1986 when it was replaced with a coverage category tied directly to the woman's pregnancy status (Pub. L. 99–509, the Budget Reconciliation Act of 1986). The commenter considered that option to be an invaluable means of permitting coverage of certain children whose mothers could not for a variety of reasons qualify for Medicaid coverage. The commenter believes that the recognition of this option in SCHIP at least partially restores this State flexibility, which was lost 16 years ago, and positions State programs to extend public health insurance to pregnant women who are currently unqualified in their own right.

Response: We appreciate the commenter's support and agree that the intent of this regulation is to provide States with flexibility in selecting the options that are available to them in providing this vital care.

The proposed regulation in fact would restore flexibility that the previous Federal policy provided that allowed welfare and Medicaid coverage for not-yet-born children.

As early as 1941, the Bureau of Public Assistance, a predecessor agency within the Department of Health, Education and Welfare (HEW), determined that unborn children could be covered under the Social Security Act of 1935. It was determined that under the Act, Federal funds could be provided to the States for the aid of unborn children. The Agency's 1946 Handbook of Public Assistance Administration permitted the inclusion of unborn children among those eligible for State-plan aid ''on the basis of the same eligibility conditions as apply to other children.'' The operating policy remained unchanged through 1971. The option remained with State welfare plans to determine whether to include unborn children as

dependents. At the time of the institution of the Medicaid program, many State social service agencies adopted similar eligibility definitions for the purposes of qualifying for Medicaid under a State plan. The approaches were later changed through a decision by the HEW Secretary. While this change was in part a reaction to the determination with respect the historic Aid to Families with Dependent Children program in *Burns* v. *Alcala*, 420 U.S. 575 (1975) that States were not required to extend eligibility based on unborn children, this decision is not applicable to the SCHIP statute and does not reflect the congressional intent to provide broad State flexibility under SCHIP to expand the provision of child health assistance. These precedents are important as we look for ways for all women to receive prenatal care.

Comment: A commenter noted that several States have sought and obtained waivers allowing them to provide SCHIP coverage to unborn children as beneficiaries of SCHIP and felt that this offers in itself a strong argument for making that inclusion uniform among the States and independent of the waiver process.

Response: We agree with the commenter, but note that States still retain the option to apply for section 1115 waivers to provide prenatal coverage to low-income pregnant women.

Comment: A commenter noted that the U.S. House of Representatives also recognizes the value of Secretary Thompson's decision and has, therefore, drafted a Congressional Resolution (H.R. Res. 346) commending the decision to recognize that pregnant mothers and unborn children are deserving of concern about their health and well being. Another commenter mentioned the bills currently being considered by the Congress that would allow States to provide low-income women with prenatal coverage under SCHIP, specifically the ''Start Healthy, Stay Healthy Act of 2001 (S. 1016/H.R. 3729), the ''Mothers and Newborns Health Insurance Act of 2001 (S. 724/H.R. 2610), and the ''Legal Immigrant Children's Health Improvement Act of 2001 (S. 582/H.R. 1143) on which the Congress has yet to schedule action. The commenters said that absent the change in statute, they are pleased that, once finalized, the proposed CMS regulation will allow States to extend coverage to pregnant women without delay. Commenters concluded that extending eligibility for SCHIP coverage to unborn children, including prenatal care and delivery, as consistent with SCHIP requirements, is the best way to provide needed medical care to those low-income children and pregnant women that would otherwise be without health insurance.

Response: We agree and appreciate the commenters' support.

2. Definition of Targeted Low-Income Child

Comment: The commenters expressed their belief that life begins at conception and unborn children are human beings who should be eligible for health care. The commenters asserted that any threshold for eligibility other than conception is inevitably arbitrary, because conception is the point when an individual human life comes into existence. Commenters stated that the proposed rule reflects the medical reality that the life of a child begins before birth at conception, and is thoroughly consistent with precedent, according legal significance to, and protecting the life of the unborn child. The commenters stated that the proposed rule's definition of ''child'' is consistent with a vast body of scientific literature, and with modern medical practice, which recognizes that the life of a child begins at conception and continues until adulthood.

The commenters mentioned that the statute defines the maximum age of eligibility for services as 19, but specifies no minimum age. Thus, without this regulatory clarification, it is possible that many otherwise eligible children would not receive prenatal care under this program, and might suffer severe health consequences as a result. Another commenter noted that *Pediatrics*, Vol 81, #5, May 1988, p. 736, defines commitment to the health of the individual as beginning at conception. The commenter supported the proposed rule based on the importance of ensuring adequate health care for children, both before and after birth, and the health of their mothers.

Response: We appreciate all of the comments as important contributions to the public record, which helps shape the Secretary's decision-making. We recognize that while the intent of this rule is to extend health insurance coverage, policy determinations are often carried into other important public discussions. We agree with these commenters that conception can be a logical point to recognize a targeted low income child, and thus, we are retaining our revised definition to permit States the option in administering the SCHIP program.

Comment: Commenters stated that the proposed rule has ample legal precedent. Outside the abortion context, they stated that unborn children are often recognized as persons who warrant the law's protection. As examples, the commenters said that most States allow recovery in one form or another for prenatal injuries. Thus, several commenters cited *Roe* v. *Wade,* 410 U.S. 113, 161–2 (1973) and an article by Paul Benjamin Linton, *Planned Parenthood* v. *Casey,* 13 St. Louis U. Public Law Rev. 15, 46–64 (1993). Another commenter noted that roughly half the States criminalize fetal homicide. Commenters said that unborn children have long been recognized as persons for purposes of inheritance, *Roe,* 410 U.S., at 162, and a child unborn at the time of his or her father's wrongful death has been held to be among the children for whose benefit a wrongful death action may be brought, 22A Am.Jur.2d death § 99 (1988). A commenter cited a Kansas bill (HB2797) that would treat a fetus as ''an unborn child'' and declare the ''unborn child'' to be a ''person or human being'' so as to allow, under State criminal law, prosecution following the ''death or injury of a fetus.'' (*See* Hanna, AP/Topeka Capital-Journal, April 2, 2002.)

One commenter said that Federal statute similarly recognizes the unborn child as a human subject deserving protection from harmful research as soon as pregnancy is confirmed, 42 U.S.C. 289g(b); 45 CFR part 46 §§ 46.203 *et seq.* Therefore, the commenters did not consider it to be an innovation to treat an unborn child as a human individual for the purpose of providing quality prenatal care to the child and his or her mother.

Response: We appreciate all of the comments as important contributions to the public record, which helps shape the Secretary's decision-making. We recognize that while the intent of this rule is to extend health insurance coverage, policy determinations are often carried into other important public discussions. We agree with these commenters that unborn children are often recognized for other purposes under State law, and thus are retaining our revised definition to permit States such an option in administering the SCHIP program.

Comment: Commenters said that defining unborn children as children is not an appropriate administrative decision. Commenters considered defining a child in this way to be arbitrary and they asserted that most of this country's population does not agree with this position. The commenters go on to say that this approach will enforce a minority point of view, is highly political, and is not in the best interests of women and their children. One commenter noted that the government should not be in the business of

deciding when life begins. Another commenter noted that to define childhood as beginning at conception is an idea not universally held by religious or medical experts and imposes a particular theological view on the American public. Another commenter noted that the proposed rule is both cynical and futile given the widespread disagreement and confusion about what constitutes life and when an unborn child becomes a person. They went on to say that there is no ethical or medical justification for expanding the definition of ''child'' to include the unborn under the SCHIP provisions, when all medical services offered to an unborn child must be performed on a pregnant woman. Another commenter noted that it is inconceivable that a child be defined as ''from conception to 19 years of age.'' If all of the world's greatest theologians, sociologists and scientists and other great minds cannot determine when life begins, the commenter asserted, then DHHS certainly cannot. Another commenter expressed concern that these rules have the hidden agenda of attempting to define ''when life beings''—a deeply divisive issue around which the American public has not achieved consensus. The commenter stated that the fact of existence outside the body of its mother has consistently been the point at which legal personhood (including the ability to receive benefits) has been distinguished from the unborn child, which is not yet a legal person. The commenter believes that changing this understanding by an executive department must inevitably lead to Constitutional challenges.

Response: We appreciate all of the comments as important contributions to the public record, which helps shape the Secretary's decision-making. We recognize that while the intent of this rule is to extend health insurance coverage, policy determinations are often carried into other important public discussions. We disagree with these commenters' contention that there is only one appropriate interpretation of the statutory term at issue, and we believe the range of comments supports our view that States should have the option to include unborn children as eligible targeted low income children. We are therefore retaining a revised definition that does not attempt to define when life begins but permits States maximum flexibility in extending SCHIP eligibility.

Comment: The commenters said that in their view, unborn children are not children who should be deemed eligible for health care. The commenters stated that until birth occurs, mother and the unborn child are one and not two different people. Another commenter said that the proposed change would make an arbitrary separation between a woman and her developing unborn child and goes onto say that such a separation can only be a concept, for the unborn child is a functioning part of the mother, sharing physical systems. Other commenters noted that the unborn child is a part of the mother's body that cannot survive without the use of the mother's heart, the mother's lungs and so forth. The commenters asserted that as a society we must allow women to control their own bodies and not turn them into mere holding vessels for an unborn child. The commenters believe that the emphasis should be placed upon the pregnant woman on whom the unborn child's health care is completely dependent. They believe that life begins at birth, not at conception and noted that defining childhood as beginning at conception is not an idea universally held by religious or medical experts.

Response: We appreciate all of the comments as important contributions to the public record, which helps shape the Secretary's decision-making. We recognize that while the intent of this rule is to extend health insurance coverage, policy determinations are often carried into other important public discussions. We disagree with these commenters that extending SCHIP eligibility to unborn children would work to the disadvantage of, or devalue the role of, the mother. Indeed, we believe the extension of SCHIP eligibility will be in the best interest of both mother and child, and thus are retaining our revised definition to permit States such an option in administering the SCHIP program.

Comment: Two commenters asked what the status of zygotes held in infertility clinics would be. They asked if such clinics would be faced with criminal suits for the practice of destroying embryos? Another commenter asked why sperm are not classified as children so sexually active men could receive funding to maintain the health of their sperm. The commenters asked who will arbitrate when a third party decides the interests of the woman conflict with those of the unborn child she is carrying? And, will the State decide whether to save the life of the mother or her unborn child? Commenters also asked if another person could be appointed the guardian of an unborn child?

Response: While the questions raised by the commenters are interesting, they are well beyond the issue of providing eligibility under a publicly funded health insurance program. The important medical and ethical issues raised in the comments existed prior to the promulgation of the proposed regulation and are resolved separately from the specific issue of eligibility for a publicly funded health insurance program. Guardianship is established through legal proceedings and is unlikely to be an issue in the routine application, enrollment, and participation process.

Comment: Commenters discussed the language of the majority in *Roe* v. *Wade* that they believe clearly States ''the word 'person' as used in the 14th Amendment does not include the unborn.'' The commenters asserted that the Administration does not have the right to reverse this clear and unambiguous statement unilaterally in a regulation. The commenters stated that the unborn child is not recognized as a person in our legal system, where mothers and fathers are responsible for decision making when it comes to health care for their offspring.

Response: While we understand the views of the commenters, we do not believe that limiting the definition of child is consistent with the flexibility that Congress accorded to States under the SCHIP statute. We believe that the range of comments supports our view that States should have the option to include unborn children as eligible targeted low income children. We are therefore retaining a revised definition that permits States maximum flexibility in extending SCHIP eligibility.

We appreciate all of the comments as important contributions to the public record, which helps shape the Secretary's decision-making. We recognize that while the intent of this rule is to extend health insurance coverage, policy determinations are often carried into other important public discussions.

Comment: Commenters asked if defining the unborn child as a person means that we will restructure the National Census and tax forms to include this new population of citizens? They asked if we will rethink our welfare policies to consider unborn children in deciding an individual's or family's benefits? Commenters expressed concern that the proposed rule will lay the legal groundwork for an adversarial relationship between a woman and her unborn child by defining the unborn child as a person, who would then have full legal status, equal to that of the woman. A commenter noted that an unborn child is not given a social security number; it is not a Medicaid beneficiary; pregnant women do not receive an exemption on their income taxes for the unborn child;

and census-takers count only born individuals.

Response: These comments extend beyond the scope of this regulation, which concerns only the ability of States to extend SCHIP eligibility to unborn children, and would not change any other Federal programs. The only government forms affected are those directly connected to the SCHIP program.

Comment: Commenters expressed concern that for women of color, distinguishing the needs of the unborn child from those of the mother has more than once resulted in adverse consequences for the mother. The commenters referred to *Ferguson* v. *City of Charleston,* 532 U.S. 67 (2001), where the Supreme Court considered issues related to a South Carolina hospital that, pursuant to State law, reported women, all of color, to the police because her unborn child in the third trimester or her newborn tested positive for drugs. Consequently, the commenters asked us to reconsider the definition in this rule.

Response: We appreciate all of the comments as important contributions to the public record, which helps shape the Secretary's decision-making. We recognize that while the intent of this rule is to extend health insurance coverage, policy determinations are often carried into other important public discussions.

While we understand the commenters' concern, we do not agree that extending SCHIP eligibility to unborn children would work to the disadvantage of, or devalue the role of, the mother. Indeed, we believe the extension of SCHIP eligibility will be in the best interest of both mother and child. Furthermore, we believe that it is consistent with congressional intent to provide broad State flexibility under SCHIP to expand the provision of child health assistance.

Comment: Commenters stated that language in SCHIP suggests that the term ''child'' does not include an unborn child because the statute makes reference to the State in which the child ''resides,'' 42 U.S.C. section. 1397jj(b)(1)(ii)(III). Commenters asserted that in ordinary usage, an unborn child is not considered to have a ''reside[nce].'' And, the commenters continued that Federal courts have ruled that in other Federal benefits programs, including AFDC and Medicaid, that the term ''child'' does not include a fetus. Therefore, the commenters asserted, the same reasoning applies here, and it is clear that the Congress did not intend the phrase ''individual under 19 years of age'' to include the ''unborn.''

Response: As previously mentioned, recognition of the unborn child in Federal assistance programs can be traced back more than half a century. Currently some Federally funded programs such as Medicaid include, (or as in SCHIP, provide States with the option to include), the unborn child in the size of a family for purposes of determining eligibility for members of that family. Eligibility for some families may indeed rest on counting the unborn child.

Comment: The commenter stated that in numerous cases related to child abuse statutes, courts have ruled that the term ''child'' does not include ''unborn children'' and as such, this rule's ''clarification'' is without merit. In support of this argument, the commenter cited *U.S.* v. *Spencer,* 839 F.2d 1341 (9th Cir. 1988) in which the defendant's infliction of injuries on an unborn child, who was born alive, but died as a result of such injuries, was within the Federal statutory definition of murder. The commenter mentioned that the key to the holding in that case was that the unborn child was born alive. Under the Uniform Code of Military Justice, the term ''human being'' was defined as a child that was ''born alive.'' *U.S.* v. *Nelson,* 53 M.J. 319 (U.S. Armed Forces, 2000). Moreover, in numerous other cases, courts have held that the term ''child'' contained in a State's child abuse statute does not include ''unborn children.'' As an example, commenters cited *In re Unborn Child,* 18 P.3d342 (Okla.2001) (holding fetus is not a ''child'' for purposes of State children's code); *State* v. *Dunn,* 916 P.2d 952 (Wash. Ct. App.1996) (dismissing child mistreatment charges, finding that the legislature did not intend to include unborn children within the scope of the term ''child,'' which was defined as a ''person under eighteen years of age''); *Reinesto* v. *Superior Court,* 894 P.2d 733, 735 (Ariz. Ct. App. 1995) (ordinary meaning of ''child'' does not include ''activity that affects fetuses''); *State* v. *Gray,* 584 N.E. 2d 710, 711-713 (Ohio 1992) (same).

Response: We recognize there is not a single, uniform standard for treating an unborn child under all State and Federal statutes. We do not agree with the commenter's basic premise that the interpretation of the term ''child'' under SCHIP must be controlled by the interpretation of that term under other, unrelated statutes that deal with criminal issues or other purposes. Thus we are retaining our revised definition in this final rule.

Comment: Commenters stated their belief that the statutory language is clear regarding the age determination as post-birth. Commenters asserted that the Congress does not mention care for unborn children in SCHIP and that, by omission, Congress has spoken on this issue. Commenters cited *Chevron* v. *Natural Resources Defense Council, Inc. et al.*, for the proposition that, in constructing a statute, primary weight must go to whether Congress has spoken on the issue and only when Congress has not spoken is weight given to a permissible agency construction of the statute.'' Commenters cited *State of Wyoming* v. *United States of America et al.*, 279 F. 3d 1214, 1230 (10th Cir. 2002) and said the ''question of whether Federal law authorized certain Federal agency action is one of congressional intent.'' The commenters asserted that it cannot be assumed that the Congress would have intended ''child'' to mean a fertilized egg, embryo or fetus unless it had been explicitly discussed. As an example, commenters cited *State* v. *Ashley,* 701 So.2d 338, 342–43 (Fla. 1997) (rejecting homicide prosecution of a woman who shot herself in the abdomen while pregnant, causing premature birth and the subsequent death of her unborn child).

The commenters stated that in the months leading up to the creation of the SCHIP program there was extensive discussion in the Congress about the need for a comprehensive children's health insurance program. And, the commenters said that when describing the problem of uninsured children, the very first statistic Senator Daschle used was that ''[e] very 48 seconds a child is born without insurance'' [emphasis added]. Commenters mentioned that in the House, Congresswoman Furse promoted as a model an Oregon policy that ''cover[ed] a child from birth to 18 years.'' The commenters asserted that not once in the legislative history does the Congress mention including fetuses or embryos as beneficiaries of a children's health insurance program, and the problems it identified were problems afflicting children, not embryos and fetuses. Commenters continued, that when the Congress spoke of the need for health insurance for prenatal care, ''uninsured pregnant women were specifically mentioned.''

The commenters continued by stating that an examination of the Congress' intent in passing the SCHIP statute demonstrates that the Secretary's action in promulgating this rule is ultra vires. They asserted that although the Secretary's interpretation of the term ''child'' is consistent with a possible legal meaning of the word, it is entirely inconsistent with the legislative history and the structure of the legislation.

First, they asserted, there is no evidence from any of the Congressional debates on the SCHIP statute that the Congress intended to extend SCHIP benefits to include ''unborn children.'' And, they stated, it seems unlikely that the Congress would have intended the statute to cover this group unless it had been explicitly discussed.

The commenters argued that this is further supported by the fact that the Congress deliberately chose to include ''well-baby and well-child care'' in the list of benefits that must be included in a basic benefit package to determine actuarial equivalence under SCHIP. If the Congress had intended that the children covered by this statute would include ''unborn children'' then including these specific benefits would have been unnecessary. The commenters said that it seems unlikely that coverage for unborn children was intended because it was not included on the list.

Furthermore, the commenters noted that the Balanced Budget Act of 1997 (BBA), contains other sections that explicitly use the term ''unborn child.'' Title IV of that Act amended sections of the Medicare and Medicaid statutes to define the term ''emergency medical condition'' as a medical condition which ''place[es] the health of the individual) or, with respect to a pregnant woman, the health of the woman or her *unborn child*) in serious jeopardy. BBA of 1997, Pub. L. No. 105–33, §§ 4001, 4704, 111 Stat. 251, 290, 496 (1997) (codified as amended at 42 U.S. C. § 1395w-22(d)(3)(B)(i) and 42 U.S.C. 1396u-2(b)(2)(C)(i)) [emphasis added].

The commenters asserted that if the Congress intended to include a fetus as a ''child'' eligible for SCHIP, it would have explicitly used the term ''unborn child'' in this section of the Act as it did in the Medicare and Medicaid sections of the same statute. The proposed amendment to the SCHIP regulations is therefore unauthorized. The commenters concluded by stating that the proposed change appears to use a rule change to advance an ideological position on the ''personhood'' of an unborn '' a position never contemplated by the Congress during debate on this program.

Response: We do not believe that Congress directly spoke to the issue of whether the term ''child'' could include unborn children, because the statute contains no limitation on such an interpretation. We believe the commenters effectively conceded that point by focusing on congressional silence and raising peripheral issues and statements by individual legislators taken out of context. The argument that Congress explicitly used the term ''unborn child'' in a number of legislative enactments and did not do so in SCHIP goes both ways, because while Congress did not expressly include unborn children, Congress did not exclude them either. Instead, Congress clearly sought to provide a maximum level of State flexibility under SCHIP. Thus we do not see a compelling reason to change our proposed interpretation in this final rule.

The reference to ''well child'' benefits in the statute simply means that the Congress chose to specify some benefits rather than others as it gave States wide latitude and broad authority to establish what benefits would be offered to those enrolled in the program. The suggestion that the Congress limited benefits to those expressly defined is wrong as indicated by the language of section 2103 (c)(3), ''Nothing in this subsection shall be construed as preventing a State child health plan from providing coverage of benefits that are not within a category of services described in paragraph (1) or (2).'' Furthermore, the definition of ''child health assistance'' at section 2110(a)(9) expressly includes prenatal care.

The construction of title XXI is a broad delegation of authority to the Secretary and the States. The Congress considered various forms of expanding health insurance including one limited solely to the expansion of Medicaid. The Congress chose not to duplicate the Medicaid program, but rather constructed a program that left a great deal of authority up to the Secretary and the States to design eligibility and benefits.

Comment: Commenters stated that no regulation or Federal statute currently on the books treats the unborn child as the equivalent of a person and no Federal regulation should do so. The commenters asserted that the SCHIP statute nowhere states or suggests that ''child'' as used in the statute includes a fetus and they asserted that defining a ''child'' to include a fetus is inconsistent with the plain and ordinary meaning of the term.

Commenters mentioned that Federal courts have been asked to rule on whether AFDC and Medicaid apply to fetuses and in both contexts, Federal courts have concluded that the term ''child'' does not include a fetus. In *Burns* v. *Alcala,* 420 U.S. 575 (1975), the Supreme Court held that the term ''dependent child,'' as used in the AFDC statute, does not include ''unborn children.'' 420 U.S. at 580–81. Likewise, the commenters asserted, in *Lewis* v. *Grinker,* 794 F. Supp. 1193 (E.D.N.Y.1991), *aff'd on other grounds,* 965 F.2d 1206 (2d Cir. 1992), the Federal district concluded that fetuses are not eligible for Medicaid. 794 F. Supp.at 1198. Commenters stated that it held that in all events, the phrase ''individuals under the age of 21'' does not easily apply to unborn children under ordinary usage. The unborn are not ''persons'' under the Constitution. *Roe* v. *Wade,* 410 U.S. 113, 93 S. Ct. 705, 35 L. Ed.2d 147 (1973).

In addition, one commenter noted that the ''age'' of any individual is normally computed from birth. The commenter asserted that while the statute does not require calculation of the precise age ''under 21,'' it is apparent that any construction of the phrase ''individuals under the age of 21,'' which will accommodate the unborn is not ordinary usage. Accordingly, this commenter concluded that the Congress did not intend the phrase ''individuals under the age of 21'' to include the unborn.

Other commenters asserted that the same reasoning applies here: under ordinary rules of statutory construction, it is clear that the Congress did not intend the phrase ''individual under 19 years of age,'' within the meaning of the SCHIP statute, to include the ''unborn.''

For this reason, commenters asserted that the Secretary lacks the authority to promulgate the proposed regulation. The commenters contended that the definition can only be changed by amending the current statute and that is far beyond the reach of the Department. The commenters went onto say that what the Department calls a ''clarification'' of the definition is an attempt to change what the Congress intended to include in the definition of child for the purposes of SCHIP eligibility.

Response: As noted above, the SCHIP statute is silent on the issue of eligibility for unborn children, and we do not believe that the interpretation of the term ''child,'' is appropriately controlled by the cases cited, which involved other programs and situations. We believe instead that Congress had a broader purpose under title XXI, which included maximizing State flexibility in offering access to child health assistance under SCHIP.

There is little doubt that the purpose of title XXI is to provide access to health insurance. This regulation would provide eligibility at an earlier point in time that is also one of the most critical times in the lifecycle.

The statute clearly established an age ceiling of 19 that could not be circumvented absent a waiver. However, other broad eligibility standards were

left to the States. A State has the authority to target to different ages below age 19. For example, Federal statute requires Medicaid eligibility at 133 percent of the Federal poverty level up to age 6. After age 6, the Federal minimum is 100 percent of poverty. To fill the gap in Medicaid eligibility, a State could have used the enhanced funding provided by title XXI and designed their SCHIP program to simply cover children at 133 percent of poverty between the ages of 6 and 19.

A State could target resources to younger children as an early childhood development program and thus create an eligibility category at higher income levels specifically for infants and children up to age 4 for example.

Many commenters who oppose this rule have indicated their belief that the Secretary does have authority to extend eligibility to a pregnant woman who is over the age limit set by statute and indeed have indicated support for such a waiver. We believe the Secretary's authority extends to the adoption of definitions through the rulemaking process.

Comment: One commenter suggested that the Secretary might be exceeding his authority by applying the revised SCHIP definition of child in assessing compliance with the Medicaid maintenance of effort provision of section 2105(d)(1), as stated in the preamble to the proposed rule at 67 FR 9938.

Response: We disagree with the commenter because we believe the Secretary's authority clearly extends to the interpretation of statutory terms such as the SCHIP term ''child.'' Furthermore, in this instance, we have used rulemaking procedures to ensure that we have fully considered the issues. We clarify that we interpret the maintenance of effort provision at 2105(d)(1) for purposes of the SCHIP statute, consistent with our overall definition of the term ''child.'' Thus, because a State may extend SCHIP eligibility to unborn children, we will review compliance with SCHIP maintenance of effort provisions by including unborn children in our review. The provision at issue is a SCHIP provision, and it ensures that SCHIP funds will not be used to replace Medicaid coverage.

Comment: Commenters stated that by defining an egg as a child and consequently, when life begins, DHHS is imposing a religious belief on all women. The commenters stated that for each group of people whose religion teaches them that an unborn child is a child at any stage of development, there is another whose religion teaches them precisely the contrary. One commenter mentioned that forcing people to proceed against their religious beliefs in order to access a public benefit is almost certainly illegal and to dangle prenatal care in front of needy women who do not happen to share a particular religious viewpoint would not only be illegal, it would be morally reprehensible.

In support of this position, one of the commenters stated that the Supreme Court found as much in the seminal case of *Sherbert* v. *Verner,* 374 U.S. 398 (1963), while more recently holding that a State may deny unemployment benefits for illegal conduct, even if that conduct is religiously motivated.

The commenter continued by saying, that the free exercise of religion means, first and foremost, the right to believe and profess whatever religious doctrine one desires. Thus, the commenter asserted that the *First Amendment* obviously excludes all ''governmental regulation of religious beliefs as such'' and cited *Sherbert* v. *Verner,* supra, at 402. The commenter asserted that the government may not compel affirmation of religious belief, and cited several cases in support of this argument, including *Torcaso* v. *Watkins,* 367 U.S. 488 (1961), *United States* v. *Ballard,* 322 U.S. 78, 86–88 (1944), *McDaniel* v. *Paty,* 435 U.S. 618 (1978); *Fowler* v. *Rhode Island,* 345 U.S. 67, 69 (1953); cf. *Larson* v. *Valente,* 456 U.S. 228, 245 (1982), *Presbyterian Church in U.S.* v. *Mary Elizabeth Blue Hull Memorial Presbyterian Church,* 393 U.S. 440, 445–452 (1969); *Kedroff* v. *St. Nicholas Cathedral,* 344 U.S. 94, 95–119 (1952); Serbian Eastern Orthodox Diocese1 v. *Milivojevich,* 426 U.S. 696, 708–725 (1976), *Employment Div. of Oregon* v. *Smith,* 494 U.S. 872, 877 (1990).

The commenter stated that in the Sherbert case, a person was denied unemployment benefits on the basis of work related misconduct because she refused to work on her Sabbath. The Court ruled that forcing a person to choose between following her religious beliefs and receiving a public benefit violates the First Amendment, and in the absence of criminal behavior, that remains the statute today.

The commenter contended that the regime proposed by CMS will confront many pregnant women with just such a choice in that they must either be willing to publicly declare the unborn child they are carrying to be a human being, even if their religion teaches them otherwise, or they must forego perhaps prenatal care and delivery services. The commenter asserted that CMS would be attempting to ''lend its power to one or the other side in controversies over religious authority or dogma.'' *Smith,* supra at 877.

Response: Application for SCHIP benefits is voluntary, and there is nothing in the SCHIP statute that forces a mother to accept SCHIP benefits. While it is certainly possible that acceptance of SCHIP benefits for an unborn child may be contrary to some women's religious beliefs, we do not believe this should preclude States from offering such benefits. If a woman has a religious objection, she simply would not accept SCHIP benefits.

Comment: Commenters stated that by establishing eligibility benefits from the point of conception, a woman's right to make decisions about her health care is undermined. The commenters pointed out that the U.S. Supreme Court has consistently ruled that women's health interests may not be supplanted by State or fetal health interests and cited the following cases: in *Stenberg* v. *Carhart,* the Court struck down a State law imposing government restrictions on abortion that failed to provide an adequate exception for preservation of the woman's health; and in *Colautti* v. *Franklin,* the Court invalidated a statute that failed to guarantee that a woman's health would always prevail over the life and health of her unborn child.

The commenters believe that this rule opens up the possibility for the government or others to claim the right to represent such fetal interests, and thus the right to make decisions about a woman's pregnancy over her objections. The commenters asserted that amending the definition of a covered ''child'' to include ''the period from conception to birth,'' thereby allowing health insurance coverage for a zygote, embryo and fetus *in utero* has legal and practical problems and could actually undermine the health of the pregnant woman. The commenters stated that current constitutional statute allows States to place limited restrictions on a woman's access to abortion, but a pregnant woman holds an absolute right to make decisions about her pregnancy during the first trimester, including decisions about her health care.

The commenters believe the proposed regulation is inconsistent with the constitutionally protected right of a woman to determine the course of her pregnancy.

Response: As stated previously, enrollment and participation in the SCHIP program is voluntary. There is no conflict as the services to be provided benefit both mother and child.

Comment: One commenter stated that the term ''conception'' should be understood to mean at the time of

fertilization when the new genetically complete and unique individual begins his or her existence. The commenter said it would be good to define clearly what is meant by ''conception'' since there are other potentially confusing definitions being used.

Response: We do not generally believe there is any confusion about the term ''conception.'' To the extent that there is, however, we believe States should have flexibility to adopt any reasonable definition of that term.

3. Program Eligibility

Comment: Several commenters asked about when coverage of the unborn child would begin, given the logistical difficulties in establishing the exact date of conception. These commenters also asked whether or not the pregnancy would need to be medically verified, and whether coverage could be retroactive to the date of conception.

Response: Under title XXI, States have discretion in adopting administrative procedures regarding eligibility for coverage. States, at their option, may elect to offer retroactive coverage or may require medical confirmation of the pregnancy before any prenatal care would be provided. If the application had been filed prior to such confirmation and it turned out that the woman was not pregnant, the costs of the pregnancy test could be paid as an administrative cost, at the State's option. If the pregnancy were confirmed, the cost of the pregnancy test and any prenatal care subsequently provided could be treated as child health assistance.

Comment: One commenter asked whether Medicaid rules should be applied to SCHIP. A few commenters asked about whose income would be used to determine the unborn child's eligibility. One specifically asked whether States would need the mother's income and resource information. Another asked whether income from the parents of an unwed pregnant teen living at home should be counted, as would be the case if the teenager were applying for coverage as a pregnant woman under Medicaid. This commenter also asked whether child support enforcement requirements apply to the unborn child or to the mother.

Response: Medicaid eligibility rules only apply when a State has implemented its SCHIP through a Medicaid expansion program. Medicaid eligibility rules do not apply to separate child health programs. States have broad discretion in defining ''family income'' for purposes of determining eligibility under a separate child health program. States have discretion to determine whose income shall be considered in determining a child's eligibility. Similarly, States have broad discretion on whether to have a resource test for their separate child health program and, if so, whose resources to count. Thus, in the example cited by one commenter, a State could opt to count the income and/or resources of a pregnant teen's parents in determining eligibility. However, it is not required to do so.

There are no Federal child support enforcement requirements for separate child health programs. Thus, while States can impose such requirements, they are not required to do so.

Comment: One commenter asked whether the baby would be eligible for a year of presumptive eligibility.

Response: In general, infants born to mothers who were eligible for and receiving Medicaid at the time of the infant's birth automatically are eligible for Medicaid for one year. It is unclear whether this commenter is asking if babies, who were covered by SCHIP while in utero, would be covered by this rule, or whether the commenter is asking if such babies would be eligible for one year of presumptive eligibility under SCHIP. We will respond to both questions.

Under 42 CFR 457.350(b) regarding the SCHIP regulation's screen and enroll requirements, if a mother is Medicaid eligible, the unborn child cannot be eligible for SCHIP. Conversely, if the unborn child is covered under SCHIP, that means that the State determined, in the screening and eligibility process, that the mother was not eligible for, or receiving, Medicaid. Accordingly, the automatic one-year eligibility enjoyed by infants born to mothers on Medicaid would not apply to infants covered by SCHIP while in utero.

If a State has adopted presumptive eligibility for its separate child health program, an unborn child could be determined to be presumptively eligible, to the same extent as any other child, consistent with the regulations at 42 CFR 457.355. However, presumptive eligibility cannot be applied to a child once the child has been determined to be eligible for coverage under SCHIP. This basic principle is true for a child determined eligible for coverage while in utero, as well as one who is first determined eligible after birth.

This does not mean, however, that an infant eligible in utero loses coverage at birth. Under current regulations at 42 CFR 457.320(e)(2), States have the flexibility to establish an eligibility period of up to 12 months. A child's eligibility for a separate child health program must be redetermined at the end of the eligibility period adopted by the State. Between regularly scheduled redeterminations, States are not required to reevaluate a child's continued eligibility, regardless of changes in circumstances (other than the child turning 19).

Under this regulation, the term ''targeted low-income child'' is defined to include an unborn child, who otherwise meets the State's income eligibility criteria. Thus, whatever period of eligibility the State has adopted for children covered under its separate child health program also would apply to an unborn child. Birth in and of itself does not alter the baby's status as a ''targeted low-income child.'' Thus, once born, the infant would remain eligible for coverage under the separate child health program until the next regularly scheduled redetermination.

For example, suppose that a State has adopted a 12-month eligibility period and that an unborn child was determined eligible for SCHIP three months prior to birth. At birth, the infant would remain eligible for coverage under the State's separate child health program for 1 year from the date of initial eligibility, or, in this case, nine months from the date of birth.

Note that, at any point a parent or other caretaker has the right to file a Medicaid application on behalf of the infant. If such an application were filed, the State then would be required to determine the infant's eligibility for Medicaid.

Comment: One commenter asked if the continuous eligibility afforded to pregnant women by Medicaid '' under which pregnant women retain eligibility for the duration of their pregnancy and postpartum period regardless of changes in income—would be available to unborn children eligible for SCHIP under this regulation.

Response: No. As explained above, Medicaid rules do not apply to separate child health programs. However, as also explained above, under current regulations at 42 CFR 457.320(e)(2), States can adopt continuous eligibility for children eligible for their separate child health program, with an eligibility period of up to 12 months. A child's eligibility must be redetermined at the end of the eligibility period adopted by the State. Between regularly scheduled redeterminations, States are not required to reevaluate a child's continued eligibility, regardless of changes in income or other circumstances (other than the child turning 19).

Comment: One commenter asked whether an unborn child could be eligible for SCHIP if the mother is not eligible for Medicaid because she does not satisfy the State's residency requirement.

Response: Subject to the provisions of 42 CFR 457.320(d), States may establish residency requirements for their separate child health programs. An application for an unborn child for this program would be treated the same as any other application for coverage. Thus, it also would be subject to the residency requirements established by the State.

Comment: One commenter asked whether States would need the mother's social security number (SSN).

Response: States are not permitted to require the SSN of anyone, other than the child applying for coverage, as a condition of eligibility. This rule does not change that situation. Thus, States may not require that the unborn child's mother provide her SSN. However, States would likely assign a unique identifier to every unborn child that is found eligible for coverage and enrolled in a separate child health program in order to perform normal administrative functions. The mechanism used to assign such an identifier is left to the discretion of each State.

As in current practice, a State may request the pregnant woman's SSN as long as the State makes it clear for what purpose her SSN would be used; and that she is not required to provide her SSN and that eligibility will not be affected if she does not do so.

Comment: One commenter asked whether either parent would be able to submit an application on behalf of the unborn child.

Response: Under title XXI of the Social Security Act, States have broad discretion to adopt administrative procedures governing the filing and processing of applications. Thus, States can, but are not required, to place restrictions on who can file an application on behalf of a child. There is nothing in this regulation, however, that would permit any individual to compel another to seek or use health care services.

Comment: A few commenters asked whether an unborn child would have to be issued a SSN or other unique identifier. These commenters also asked what method the State would use to track services provided to the unborn child.

Response: We are not aware of any circumstances in which the Social Security Administration assigns a SSN to an individual prior to birth. This rule does not request, let alone require, that it do so.

Therefore, we do not anticipate that an unborn child that is determined to be eligible for coverage under a separate child health program would be given a SSN. Consequently, it will be necessary for States to assign a unique identifier to appropriately process claims. The mechanism used to assign the identifier is left to the discretion of each State.

The data collection and reporting requirements for separate child health programs are set forth at 42 CFR subpart G. Regulations governing payment for and verification of services provided are found at 42 CFR 457.950 and 42 CFR 457.980. States are required to comply with these requirements with respect to coverage of all enrolled individuals. This rule does not impose any additional requirements on States with respect to services provided to an unborn child.

Comment: In the March 5, 2002 proposed rule, we explained that this regulation will give States the option to consider an unborn child to be a targeted low-income child and therefore eligible for SCHIP ''if other applicable eligibility criteria are met.'' One commenter asked whether the ''other eligibility criteria'' applies to the unborn child or the pregnant woman.

Response: The ''other eligibility criteria'' pertain to the unborn child.

Comment: One commenter emphasized the importance of the screen and enroll requirements.

Response: We agree with the commenter that the screen and enroll requirements are very important. As we explained in the March 5, 2002 proposed rule, the purpose of the rule is to encourage States to increase the availability of prenatal care. In order to ensure that funding for prenatal care under SCHIP does not replace funding for prenatal care under Medicaid, we explained that States must apply the screen and enroll process described in the SCHIP regulations at 42 CFR 457.350. Consistent with the terms of that regulation, States must screen the unborn child's mother for Medicaid eligibility. If the State determines that the mother is potentially eligible for Medicaid, then the State must assist her in completing the Medicaid application process, again, consistent with the requirements set forth in 42 CFR 457.350.

Comment: One commenter asked whether a State could include this group in an existing Medicaid waiver, such as the family planning and Healthy Start waivers.

Response: Section 1115 waivers are demonstration projects awarded to States at the Secretary's discretion on a case by case basis. As such, consideration of this eligibility group could be considered for inclusion in an existing waiver but a sufficient rationale would need to be provided by the State. Also, it may not make sense to include this group, as in the case of family planning waivers, for example.

Comment: Two commenters said that all States should be required to cover the unborn child.

Response: We cannot require States to cover unborn children. The statute does not require that States cover all children who meet the definition of a targeted low-income child. Section 2102(b)(1) of the Act and implementing regulations at 42 CFR 457.320(a)(2) specifically permit States to adopt eligibility standards based on age. Thus, we are precluded from mandating that all States cover unborn children.

4. Immigration Status

Comment: Commenters stated that the proposed regulations do not address how the unborn child will be classified in determining its citizenship or immigration status. Many commenters urged the Department to make clear in the final rule that unborn children will be eligible for SCHIP benefits under the rule, regardless of the immigration status of their mothers. The commenters asserted that since no unborn child is a citizen or a qualified immigrant, there is no basis for making distinctions among unborn children on nationality and immigration status grounds.

Commenters stated that low-income pregnant women who are either recent legal immigrants (subject to the 5 year bar on receipt of Federal public benefits) or are undocumented immigrants are often unable to secure prenatal care, and such an exclusion is likely to result in serious harm to the unborn child.

Yet, commenters noted, the babies born to these women in the United States will become citizens immediately upon their birth. Commenters asserted that effective health care for these children, no less than others, must begin with access to prenatal care. In addition, this would provide effective coverage for the maximum number of unborn children. One commenter noted that the proposed regulation would permit States to ensure that essential prenatal services are available ''to benefit unborn children regardless of the mother's eligibility status.'' (67 FR 9937) The commenter noted that this position is consistent with existing statute and practice since many children whose parents would not be eligible for SCHIP are currently enrolled in the SCHIP program. These include children whose

parents are subject to the 5-year bar. The commenter states that with the exception of income available to the child, parents' eligibility for SCHIP is irrelevant. They noted that SCHIP eligibility is based upon the age, immigration status, insurance coverage and other factors specific to the child. 42 U.S.C. 1397bb(b)(1)(A); 42 CFR 457.320, as amended by interim final rule published at 66 FR 33810 (June 25, 2001).

The commenters stated that HHS should amend the proposed regulation to clarify that all unborn children will be treated equally for SCHIP eligibility purposes. One commenter specifically requested that we amend § 457.320(b)(6) to state that ''In establishing eligibility standards and methodologies a State may not exclude individuals based on citizenship or nationality to the extent that the children are U.S. citizens, which includes unborn children from conception to birth who upon birth will be U.S. citizens, U.S. nationals or qualified aliens.'' Commenters contended that if the regulation were adopted, treating all unborn children as constructively born in the U.S. would be the most straightforward way to accomplish this end and cited *Lewis* v. *Thompson,* 252 F.3rd 567, 581 (2d Cir. 2001), (discussing the ''constructive birth'' provisions of 42 U.S.C. 1396d(n)(1)(A), which treats a childless pregnant woman as a parent with one child for TANF eligibility purposes.)

Response: We agree with the commenters that requiring exclusion of unborn children on the basis of immigration status is neither legally mandated nor desirable. Unborn children do not have immigration status as ''aliens'' and thus are not precluded from receiving Federal means-tested benefits under the provisions of Title IV of the Personal Responsibility and Work Opportunity Reconciliation Act of 1996 (PRWORA), Public Law No. 104–193. Under PRWORA, these restrictions apply only to ''aliens'' who are not ''qualified aliens''; since unborn children are not ''aliens,'' they are not within the scope of this preclusion nor are unborn children subject to the 5-year bar. Furthermore, as we stated in the preamble to the proposed rule, the goal is to permit States to ensure that needed services are ''available to benefit unborn children independent of the mother's eligibility status'' (67 FR 9937). Because prenatal care is a key element to ensuring healthy infants and children, this goal would maximize the availability of prenatal care and, consequently, promote the overall health of infants and children. It would be inconsistent with this goal to tie services for prenatal care to the immigration status of the mother.

We do not, however, believe that it is necessary to explicitly amend the proposed rule to express this interpretation of applicable law. Since unborn children would not be precluded from receiving benefits under applicable law, there is no reason to further address the issue in the regulation text.

Comment: One commenter noted that the unborn child of an ineligible immigrant woman is indistinguishable from that of any other woman present in that State. In the real world, upon birth, that unborn child becomes a child and a U.S. citizen. This commenter asked, ''But if CMS adopts a position that deems that fetus a ''child'' in utero, then what possible justification could there be for denying SCHIP benefits to such a ''child''?'' Another commenter recommended that the proposed regulation should not be clarified to deny coverage to the unborn children of immigrant women merely because the women would themselves be ineligible to receive benefits under Federal statute. This commenter stated that any clarification of the regulation should make explicit that the woman's immigration status is irrelevant to the provision of SCHIP benefits. If the proposed regulation is adopted, there is no principal basis on which to distinguish the unborn children of immigrant women from the unborn children of citizen women. The commenter said that although Federal statute provides that ''an alien who is not a qualified alien is not eligible for any Federal public benefit * * *'' 8 U.S.C. 1611(a), an unborn child has no citizenship or immigration status whatsoever, and is therefore not made ineligible for coverage by reason of 8 U.S.C. 1611(a) or any other immigration-related eligibility restriction. The commenter stated that any exclusion of the unborn children of ineligible immigrant women would thus have to be accomplished by altering the proposed regulation to exclude such unborn children explicitly. The commenter contended that such a change would be contrary to the avowed purpose of the proposed regulation and would have no basis in logic, given that the regulation is premised entirely on the unborn child's status and not the woman's and in support of this position cited *Plyler* v. *Doe,* 457 U.S. 202, 220 (1982) (invalidating State law denying public schooling to the children of undocumented immigrants because the denial ''directed the onus of a parent's misconduct against his children'').

Response: We agree that it is does not make sense to try to impute an immigration status to an unborn child based on the status of the mother. As discussed above, an unborn child is not an alien, and the status of the child is not necessarily tied to the status of the mother. Moreover, to do so would not be consistent with the purpose of providing States with the flexibility to maximize the availability of prenatal care to ensure healthy infants and children.

Comment: Commenters stated that the rule should be clarified to make clear that undocumented immigrants may not be reported to immigration authorities for seeking medical care for their unborn children. Commenters were concerned that in the absence of such a protection, undocumented immigrant mothers may not seek medical care, and their unborn children will not receive care they need to help ensure a healthy birth and are entitled to as a U.S. citizen. Commenters stated that since the pregnant woman will never be the recipient, it would seem that a State, pursuant to the ''Tri-Agency Guidance'' issued by the Departments of Health and Human Services and Agriculture (on 9/21/00), would be prohibited from inquiring about her immigration status.

Response: Nothing in this regulation alters section 434 of the 1996 welfare reform statute, which prohibits the Federal government from restricting State or local government entities from sending to or receiving from the Immigration and Naturalization Service information regarding the immigration status of an alien in the U.S. Further, nothing in this regulation alters the Tri-Agency Guidance with respect to inquiries about immigration status of nonapplicants.

Comment: The commenter was concerned about the additional cost of covering all unborn children conceived in the United States by illegal immigrant women. The commenter believes that under this rule, the unborn child should be eligible for benefits if (she is conceived in the United States. The commenter was concerned that if women are permitted to self-declare whether conception occurred in United States that the Administration's cost estimate is too low because of the large numbers of undocumented immigrants who would be receiving coverage.

Response: The question of where conception occurred is irrelevant to the question of the unborn child's immigration status or this final rule. This regulation provides states with the flexibility to assure essential prenatal care to the maximum number of unborn children, regardless of the immigration

status of their mothers. States, in deciding whether or not to adopt this option under their title XXI state plan, will certainly weigh, along with numerous other factors, the potential costs associated with providing coverage to unborn children since States cannot receive Federal funding that exceeds title XXI allotment.

Comment: One commenter stated that prenatal care is even more important among Latinas, who suffer from higher rates of pregnancy-induced hypertension and maternal mortality. The commenter noted that 12 States offer prenatal care to immigrant women who are ineligible for Federally funded medical assistance, which has lessened the effects of PRWORA. The commenter stated that if the new regulation explicitly covers children of undocumented immigrants, it would increase the number of States that provide prenatal care services to pregnant immigrant women and provide an incentive for those States that have seen a large influx of Latina immigrants in recent years.

Response: This rule ensures that States have maximum flexibility to extend SCHIP eligibility to unborn children, independent of the immigration status of the mother. We believe that this rule addresses the concerns of the commenter since the intent of this rule is to benefit both the unborn child and their mothers by promoting continuity of important medical care.

5. Benefits

Comment: Commenters, whether in favor of this rule or not, expressed their belief that all women should receive regular and adequate prenatal care because there is overwhelming data that shows that there are still too many women who receive no or less than adequate care during pregnancy. Commenters agreed that health care should be provided from the prenatal stage.

Many commenters, in support of this rule, expressed their belief that all women should be able to receive prenatal services that increase the chances of every child being born healthy. This regulation would allow pregnant women and unborn children to receive the medical treatment they need. Commenters noted that the lack of prenatal care results in increased health costs for taxpayers in caring for problems and complications after birth, and some noted that coverage of the unborn child may result in the incidental improvement in the health of the mother. But, all too often proper prenatal care has been cost prohibitive to low-income women, and the commenters view this proposal as assisting the millions of women of childbearing age who lose or lack health insurance. Proper prenatal care can prevent avoidable birth defects. Fetal surgery is able to correct many life-threatening congenital disorders. There is no reason the unborn child should be denied the lifesaving procedures that will permit him or her to live a full, normal life after birth, particularly with the recent medical advances that will continue to develop and evolve. Providing this care is a benefit, not only for the unborn child, but for women and families as well. Commenters stated that this policy provides a way for the mother to make positive choices with regard to caring for her unborn child and herself.

Some commenters noted that coverage would decrease infant mortality rates. Two commenters cited a DHHS report, ''Trends in the Well-Being of America's Children & Youth 2000,'' that indicated prenatal care can improve birth outcomes and decrease health costs. Two commenters also cited an American Academy of Pediatrics (AAP) policy that indicates ''* * * physical and psychosocial growth, development, and health of the individual begins prior to birth when conception is apparent * * * the responsibility of pediatrics may therefore begin with the fetus * * * .''

Commenters expressed a concern that it is in the public's interest to assure that expectant mothers have access to quality prenatal health care coverage as highlighted in Healthy People 2010. Additionally, commenters noted that it is less expensive to care for healthy babies than unhealthy babies and that access to prenatal care means long-term reduction in the cost of health care for these children. Expanding Federal health programs to give more low-income pregnant women access to prenatal care is an important step in making sure children get a healthy start in life.

Response: We appreciate the commenters' support of our goal in developing this rule. By providing States with the option of ensuring that needed prenatal care is available under SCHIP to benefit unborn children, uninsured low-income women, who are less likely to receive prenatal care, would be able to access crucial services that they may not otherwise be able to receive. This regulatory clarification is intended to benefit both the unborn child and the mother by promoting continuity of important medical care. We agree that healthy pregnancies should also result in significant savings in public expenditures over a child's lifetime.

Comment: While commenters agreed with the importance of prenatal care as essential for the mother and child, many disagreed with the mechanism this Administration has taken for accessing that care. They feel very strongly that eligibility should be extended to the pregnant woman and not to the unborn child. Several commenters opposed this approach as a false separation of the woman and child. Commenters were concerned that the medical needs of the embryo would take precedence over the needs of the mother and stressed their belief that the benefit should be conferred to the woman and not to the unborn child. They expressed concern that this regulation may create a conflict of interest between the woman and the unborn child.

They believe that a crucial question is whose needs take priority? Many felt that treating the unborn child as if it exists separately and should be considered before and above the health of the woman carrying the unborn child is a false separation that would ultimately prove detrimental to the health of many women as well as to their unborn children or newborns. They believe that this proposal interferes with women's autonomy to make medical care decisions and represents an arbitrary separation of the woman and child (since one cannot be cared for without the other also receiving care). One commenter indicated that conflicts of interest between the mother and child would not arise if the woman was determined the patient, as under the Medicaid program (42 U.S.C. 1396a(a)(10)(A)(i)(III), (IV), (VI), (VII), (A)(ii) and (1).)

Response: We understand the commenters' concerns. The intent of this rule is to maximize the availability of SCHIP benefits in the interest of both pregnant women and unborn children. The statutory provisions of title XXI are very clear that only targeted low-income children can be eligible for the program. Although, under § 457.1010 States do have the option of applying for a variance to purchase family coverage through which a pregnant woman over the age of 19 could be determined SCHIP eligible.

States do have options available if they wish to expand eligibility to a pregnant woman over the age of 19 whose income is over the current Medicaid income guidelines rather than to the unborn child, which include: a title XIX expansion under one of their poverty groups; or a section 1115 waiver demonstration. However, absent a

waiver, eligibility can only be conferred to the targeted low-income child.

That being said, nothing in this rule is intended to affect the traditional relationship between the pregnant mother and the physician. Questions of medical treatment for the pregnant woman and/or her unborn are a decision between the pregnant woman and her physician and nothing in this rule would circumvent or alter that relationship.

Comment: Commenters were concerned that a woman could possibly be denied medical treatments such as prescription drugs, psychotropic medications to treat psychiatric illnesses, and life-saving radiation or chemotherapy treatments because of the effects they would have on the unborn child.

Commenters asked if the pregnant woman would be denied other care that might be harmful to the unborn child, thus effectively pitting her needs against those of the unborn child? One commenter asked whether the State would be subjecting women to drug and alcohol tests on the alleged ground that it is protecting its patient-beneficiary? Several commenters referred to this policy as medically unsound, ethically unacceptable, and/or poor public policy. Commenters questioned if physicians would be required to consult with the unborn child's father or another legal guardian if these types of issues exist. Several questioned what entities would have the authority to assert the rights of the unborn child (such as, State, Federal government, physician, pregnant woman, father?).

To illustrate their point, two commenters cited a court case (*In re A.C.,* 573 A. 2d 1235, 1235 (D.C.1990) in which a woman was compelled by the court to undergo a caesarean section, following which both the mother and unborn child died (Veronica E. B. Kolder *et. al,* Court-Ordered Obstetrical Interventions, 316, *New Engl. J. Med.* 1192, 1195 (1987).

Several commenters also raised the question as to what happens in cases where continuing the pregnancy itself endangers the life of the mother, since the assumption made by the commenters is that the life of the unborn child would take precedence over the life of the mother or that both would be allowed to die.

Response: These comments extend beyond the scope of this regulation, which concerns only the ability of States to extend SCHIP eligibility to unborn children. As in Medicaid, nothing in this rule is intended to affect the traditional relationship between the pregnant mother and the physician. Questions of medical treatment for the pregnant woman and/or her unborn are a decision between the pregnant woman and her physician and nothing in this rule would circumvent or alter that relationship.

Comment: Commenters expressed concern that certain benefits that would provide comfort for the pregnant women would not be covered, such as epidurals or anesthesia during delivery.

Response: Within the options for benefit coverage selected by a State, as described at § 457.410, a State selecting this SCHIP option has the flexibility in defining its benefit package to provide benefits it deems necessary.

Regarding the specific question asked by the commenters, while analgesia given as an epidural and/or intramuscular intravenous injections of pain relievers, and/or anesthesia given as regional or general anesthesia is primarily provided during labor and delivery to relieve the mother's pain from uterine contractions or to perform surgery, that is, C-section, if a woman's pain during labor and delivery is not reduced or properly relieved, adverse and sometimes disastrous effects can occur for the unborn child. There is no question that analgesia/anesthesia is required in order to perform a C-section and such a procedure cannot even be considered if some form of pain relief is not provided. In terms of vaginal deliveries, without relieving the mother's pain from uterine contractions, the progress and labor may be interrupted and not efficient, which in turn can cause fetal complications, such as fetal distress and infection from prolonged labor and prolonged rupture of membranes and other complications. Therefore, we would expect that this coverage would be provided.

Comment: Several commenters were concerned about whether States would have the flexibility to use enhanced Federal funds to provide comprehensive benefits to pregnant women and stated that the failure to provide a comprehensive range of services for all of a pregnant woman's health care needs and treatment of some stated diseases, could compromise her health, as well as, that of the unborn child.

Although many commenters supported expanded access to prenatal care among low-income, uninsured women, many believed that the benefit should be given to the woman, in addition to or instead of her unborn child. One commenter stated that one cannot effectively treat an unborn child without treating the woman carrying it, believing that a healthy pregnancy resulting in the delivery of a healthy baby requires a healthy mother. One commenter stated that low-income women deserve actual, not merely incidental, health insurance coverage that covers all of their health needs. Several commenters indicated that women deserve comprehensive care, not simply care related to the unborn child, and several referred to the proposal as ''reducing women to vessels.''

Commenters also felt that extending comprehensive care to the mother would result in women who are healthier and ultimately would result in better birth outcomes. One commenter felt that targeting coverage for the unborn child, not the mother raised ethical issues and puts the mother's health at risk by providing inadequate coverage.

Commenters expressed concern or questioned whether care would be extended to women for injury or disease not related to the pregnancy, such as skin melanoma, emergencies, accidents, broken bones, or mental illness. One commenter advocated for coverage of drug treatment programs for mothers who were addicted.

Several commenters indicated that the focus should be on addressing the health care needs of millions of uninsured women, and one advocated expanded access to uninsured women to ''take care of those already here.''

Response: The SCHIP statute provides States with broad flexibility in defining those services for which they choose to provide coverage under their State plan. States have the flexibility to define and provide comprehensive services that are related to the pregnancy or to conditions that could complicate the pregnancy. Under the regulation, States would define what services would be included. Services related to conditions that could complicate the pregnancy include those for diagnosis or treatment of illnesses or medical conditions that might threaten the carrying of the unborn child to full term or the safe delivery of the unborn child. Within these parameters, States have discretion in the services for which coverage can be provided.

However, SCHIP eligibility is limited by statute to targeted low-income children and there must be a connection between the benefits provided and the health of the unborn child.

We would point out that the regulation is intended to reach individuals who are currently uninsured and who therefore lack access to any services.

Comment: Commenters believe that, by permitting States to extend SCHIP coverage to unborn children, this rule would effectively deny women access to needed postpartum care. They felt that pregnancy-related care should be

viewed as a continuum comprising three distinctly important periods: prenatal, intrapartum (during labor and delivery), and postpartum care. Commenters stressed that a woman's pregnancy-related health care needs do not end the moment her child is born. The commenters stated that the woman still requires many pregnancy-related services and optimal maternal health is important for overall family health. Under the proposed regulation, covered care would be available only during ''the period from conception to birth.'' These commenters are concerned that the moment after the birth of the child, a woman would lose any incidental covered care that she had received as a result of having an SCHIP-covered unborn child in utero. The commenters continued with their concern that woman would therefore not be eligible for any care during the postpartum period including but not limited to the treatment of hemorrhage, infection, episiotomy repair, C-section repair, family planning counseling, treatment of complications after delivery, and postpartum depression. Several cited this proposal as bad public policy that will ultimately result in increased health care costs.

One commenter questioned whether hospitals and practitioners would be compelled to release women immediately after delivery due to lack of maternal coverage. Others expressed concern that some women will leave the hospital immediately after birth to avoid expenses, against ACOG and AAP recommendations, while others will not attend the four to six week recommended follow-up visits (resulting in decreased maternal health).

Several commenters noted that if the mother is ill and does not get the care she needs, she may not be able to take care of her children, especially an infant, appropriately. This indirectly jeopardizes the health of women, children and families, and will inevitably result in compromised health outcomes for both the woman and the unborn child.

Commenters quoted ACOG and AAP's recommendation that four to six weeks after delivery the mother should receive a postpartum review and examination. Several commenters referenced Medicaid statute and regulations as an illustration of how public programs rely on established medical standards (§ 1902(1) of the Act as defined in § 1902(a)(10)(a) (clause VII).

One commenter also indicated that lack of family planning counseling creates greater risk of unintended pregnancy with serious social and economic costs to the woman, State, and community. Others noted that maternal mortality represents a serious health problem, particularly for African-American women.

One commenter stated that coverage for postpartum care and assistance in enrollment in Medicaid or SCHIP should be a requirement for States electing to implement this rule, even in cases where the child is not born alive.

Commenters asked clarifying questions such as: would postpartum follow-up be covered; would emergencies arising to the mother following delivery be covered; and would benefits such as the 60 days postpartum care available through Medicaid be provided?

Response: Again, the intent of this rule is to extend access to individuals who are currently uninsured. We believe that the benefits that would be available to the mother and unborn child are indeed vital.

The SCHIP statute provides States with flexibility in defining those services for which they choose to provide coverage under their State plan. States have the flexibility to define and provide services that are related to the pregnancy or to conditions that could complicate the pregnancy. Within these parameters, States have significant flexibility in the services for which coverage can be provided.

Commenters are correct that care after delivery, such as postpartum services could not be covered as part of the title XXI State Plan, (unless the mother is under age 19 and eligible for SCHIP in her own right), because they are not services for an eligible child.

Comment: One commenter expressed concern that there are those who would define care to include abortion, which the commenter felt would be a complete twisting of the term ''care.'' This commenter did not want abortions covered by the government.

Response: FFP is available in expenditures for abortions under SCHIP only as specifically authorized by the Congress in the statute and this will not change with this regulation. Section 2105(c)(1) and (c)(7) of the Act sets limitations on payment for abortion services under SCHIP. Section 457.475 of the January 2001 SCHIP final regulation, specifies that FFP is not available for expenditures for abortion, or for expenditures for the purchase of health benefits coverage that includes coverage of abortion services, unless the abortion is necessary to save the life of the mother or the abortion is performed to terminate a pregnancy resulting from an act of rape or incest. Additionally, FFP is not available to a State for expenditures of any amount under its title XXI plan to assist in the purchase, in whole or in part, of health benefits coverage that includes coverage of abortion other than to save the life of the mother or resulting from an act of rape or incest.

Comment: Commenters asserted that fetal surgery saves lives, as in the case of spina bifida or repair of heart defects and asserted that this type of coverage should be offered to unborn children.

Response: We provided a discussion of ''fetal medicine'' or ''fetology'' in the preamble to this rule as an example of a distinct and important medical specialty that represents emerging opportunities for services specifically targeted to the care of the unborn child.

Consistent with section 2103 of the Act, States have flexibility in defining the benefits that are included as part of the health coverage provided to targeted low-income children. The specific prenatal and pregnancy related benefits included in a State's benefit package would be the decision of the State.

Comment: The commenters stated that the practices of ''fetal surgery,'' as described in the March 5, 2002 proposed rule, have been deeply plagued by both clinical and ethical problems. The commenters wanted to make clear that there is no such thing as fetal surgery independent of the mother, and that surgery on the unborn child occurs only through the woman's body and can occur only with her consent. Commenters stated that surgery on the fetus presents significant risks to the pregnant woman's life and health and the impact this surgery can have on pregnant woman should be recognized and strongly considered. Commenters continued that modest improvements (or no improvements at all) in the outcomes for fetuses with neonatal operations often happen in conjunction with severe obstetrical complications for the woman.

In support of the medical and ethical controversy surrounding fetal surgery, one commenter cited several articles: Bruner *et al,* Fetal surgery for myelomeningocele and the incidence of shunt dependent hydrocephalus JAMA 1999;282;1819–25; Sutton *et al,* Improvement in hindbrain herniation demonstrated by serial fetal magnetic resonance imaging following fetal surgery for myelomeningocele JAMA 1999;282:1826–31; Simpson JL, Fetal surgery for myelomeningocele: Promise, progress, problems JAMA 1999;282;1873–4; Lyerly *et al,* Attitudes of maternal-fetal specialists concerning maternal-fetal surgery, American Journal of Obstetrics and Gynecology 2001;185;1052–8; Lyerly et al, Toward the ethical evaluation and use of

maternal-fetal surgery. Obstetrics and Gynecology 2001;98;689–97. This commenter also cited a National Institutes of Health conference examining the scientific, clinical, and ethical issues related to maternal-fetal surgery.

The commenters stressed that a review of the medical literature shows that maternal-fetal surgery is still considered experimental or investigational by such medical professional organizations as the American College of Obstetricians and Gynecologists. One commenter quoted a member survey of the Society for Maternal-Fetal Medicine, which found that 57 percent of respondents believed that a moratorium should be imposed on open fetal surgery for nonlethal conditions until a multicenter controlled trial is completed. The commenter noted that most of the conditions listed by the March 5, 2002 proposed rule are exceptionally rare and the mortality rates following surgery have been high. Another commenter indicated that current Medicaid programs and most private insurers do not cover experimental procedures.

In addition, the commenters expressed concern that there is no research or data to support the assertion that fetal surgery can ultimately lower postpartum medical care costs. They indicated that while long-term research in this field may someday produce such results, the March 5, 2002 proposed rule's claims that cost-savings currently exist is without support.

The commenters noted that despite the fact that fetal surgery is at this stage largely experimental, the March 5, 2002 proposed rule states that the ''Secretary would like to permit the States the flexibility to pay for the medical expenses related to unborn children,'' suggesting a departure from longstanding State and Federal policy regarding denying coverage for experimental treatments. One commenter indicated that this rule seems to signal a radical shift in policy regarding experimental treatments, and if this is the case, there are many patients suffering from cancer and other diseases who might benefit from an overall change in policy regarding experimental treatments. The commenter refers to a May 26, 1993, letter to State Medicaid Directors and cites the following: *Miller by Miller* v. *Whitburn*, 10 F.3d 1315 (7th Cir. 1993); *Rush* v. *Parham,* 625 F.2d 1150, 1156 (5th Cir. 1980); *Weaver* v. *Reagan*, 886 F.2d 194 (8th Cir. 1989).

In addition, commenters are concerned that since fetal surgery is so new and lacking in proven benefits that it really should be considered research. Commenters asserted that this would make it appear, then, that this rule is promoting unreviewed and unapproved research on pregnant human subjects, in conflict with statutes regarding human subjects of medical research (Anne E. Drapkin Lyerly, MD *et al.* Toward the Ethical Evaluation and Use of Maternal-Fetal Surgery, 98 ACOG 689 (2001).) They also stated that fetal surgery is experimental and it is highly unlikely that this would be covered by Medicaid or any other insurance program (45 CFR 46.101 through 45 CFR 46.409, promulgated pursuant to the Health Research Extension Act, 42 U.S.C. 289.)

Response: As we have said previously, nothing in this rule is intended to affect the traditional relationship between the pregnant woman and her physician. Questions of medical treatment for the pregnant woman and/or her fetus are a decision between the pregnant woman and her physician and nothing in this rule would circumvent or alter that relationship.

Additionally, we are not saying that States that choose to extend coverage to the unborn child must provide fetal medicine or fetology. Consistent with section 2103 of the Act, States have flexibility in defining the benefits that are included as part of the health coverage provided to targeted low-income children. As such, States have always had the ability under SCHIP to provide treatments or surgery that may be considered investigational or experimental if they determine they are medically necessary. We note that States have the same option for providing such coverage under Medicaid. But, the specific prenatal and pregnancy related benefits included in a State's benefit package would be the decision of the State.

We do not have data that fetal surgery can ultimately lower postpartum medical care costs and did not make this assertion. In the preamble to the proposed rule we said that conditions in utero that can be medically or surgically corrected can have beneficial consequences that can include saving the life of the child; elimination of long neo-natal, post-partum medical care for the child and ultimately lower post-partum medical care costs for the child and therefore the SCHIP plan.

Comment: Commenters stated that according to this rule, the unborn child is the patient and the one eligible for services and, as such, they asked, ''When the needs of the fetus and mother diverge, to whom is the medical professional's ethical duty owed?'' They asked whether SCHIP or Medicaid would still pay for surgery if the unborn child were endangered to save the life of the pregnant women? Commenters stated that this proposal raises troubling ethical issues for physicians because ancillary health care potentially puts women's health at risk.

Response: We understand the commenters' concerns, and want to be very clear that nothing in this rule is intended to affect the traditional relationship between the pregnant woman and her physician. Questions of medical treatment for the pregnant woman and/or her unborn child are a decision between the woman and her physician and nothing in this rule would circumvent or alter that relationship.

Comment: Many commenters were also concerned that coverage would not be extended in the case of miscarriage or stillbirth since the SCHIP beneficiary would no longer exist. Many cited such a policy as disrespectful to women.

Response: Services provided under those circumstances would be allowable costs. We believe that providing uninsured women with access to health insurance coverage that benefits both mother and child contributes to the respect of women. This proposed regulation is one option that would become available to States and is one action out of many that the Secretary has taken to promote the health of women.

Comment: Another commenter indicated that the rule allows for unscrupulous providers to bill twice for some services—once on the mother's account and a second time on the unborn child's account.

Response: We believe that States with separate SCHIP programs have implemented sufficient safeguards to address the commenter's concerns. Specifically, § 457.980 of the June 25, 2001 SCHIP implementing rule requires States to establish and maintain systems to identify, report, and verify the accuracy of claims for those enrolled children who meet the requirements of section 2105(a) of the Act, where enhanced Federal medical assistance computations apply. Additionally, States are required by § 457.915 of the January 2001 SCHIP final rule to establish procedures for ensuring program integrity and detecting fraudulent or abusive activity.

Comment: The commenter questioned why prenatal care should be provided to an expectant mother and indicated care should wait until after delivery.

Response: Prenatal care has been clearly shown to reduce the likelihood of premature delivery or low birth weight, both of which are associated

with a wide range of congenital disabilities as well as infant mortality. Moreover, proper prenatal care can detect a great number of serious and even life-threatening disabilities, many of which can now be successfully treated in utero. Ensuring prenatal care for more children will significantly help reduce infant mortality and morbidity rates and will spare many infants from the burden of congenital disabilities and reduce the cost of treating those congenital disabilities after birth.

Comment: The commenter noted that States have the option under SCHIP to offer a benefit package that is equivalent to benchmark coverage, coverage under a State-based plan, or Secretary-approved coverage. The commenter questioned how a State would determine a comparable or actuarially equivalent benefit package for unborn children.

Response: Rather than carving out services and establishing a benefit package exclusively for unborn children as the commenter suggests, we would expect the prenatal benefits for unborn children to be part of the State's overall health benefits coverage package that is consistent with section 2103 of the Act and § 457.410 of the final regulation.

The definition of child health assistance at § 457.402 provides a comprehensive listing of services that includes prenatal care along with other services that would be pregnancy-related. These are services that many States already provide to SCHIP eligible children who become pregnant as part of their current benefit coverage

Comment: One commenter asked whether Medicaid currently covers the types of services listed in the March 5, 2002 proposed rule. If so, the commenter asked how this could be so, since unborn children are not covered under Medicaid. If not, the commenter asked whether there are estimates of the cost of providing fetology services to Medicaid eligibles, since States cannot offer higher income children greater benefits than lower income children.

Response: Under Medicaid, coverage may include services for pregnant women that are related to pregnancy (including prenatal, delivery, postpartum, and family planning services) and to other conditions that may complicate pregnancy. Within those parameters, States have broad discretion in what services to cover in their Medicaid State plan. While these types of services are available to eligible pregnant women under Medicaid, this rule would authorize SCHIP coverage of these types of services to unborn children whose mothers are not eligible under Medicaid.

Medicaid and SCHIP are different programs, authorized through title XIX and title XXI respectively although States can expand their Medicaid program through the enhanced funding made available by title XXI. As in Medicaid, the specific prenatal services, which any given State will cover under SCHIP is left to the discretion of the State. Inasmuch as States are not required to cover the same package of benefits relating to prenatal care under Medicaid and SCHIP, States can cover the same, fewer or more services under SCHIP than Medicaid. In the event that a State decided to cover certain prenatal services provided to an unborn child under SCHIP, but not to pregnant women under Medicaid, the commenter seems concerned that the State would be in violation of section 2102(b)(1)(B)(i) of the Act.

Section 2102(b)(1)(B)(i) of the Act prohibits States from covering targeted low-income children at a higher income level without covering children at a lower-income level within any defined group of targeted low-income children. An unborn child who is eligible under SCHIP and a lower-income pregnant woman who is eligible under Medicaid are not within the same defined group of targeted low income children under SCHIP. Accordingly, the provisions of section 2102(b)(1)(B)(i) of the Act would not apply.

6. Maintenance of Effort

Comment: One commenter underscored that the Maintenance of Effort requirements under title XXI should apply to unborn children to the same extent that they apply to born children. Several other commenters opposed application of the maintenance of effort requirements to unborn children. These commenters felt that doing so punishes States that already have expanded Medicaid coverage to pregnant women beyond the minimum required and may discourage States from expanding coverage to new populations in the future. They also suggested revising the final rule to clarify that any State that expanded eligibility for pregnant women after June 1, 1997 be permitted to convert that expansion to SCHIP.

One commenter asked whether a proposal to convert optional coverage for pregnant women with incomes from 150 percent to 185 percent of the Federal poverty level (FPL) from title XIX to title XXI funding would be consistent with the March 5, 2002 proposed rule. This commenter asked specifically whether a State could shift the current optional coverage of pregnant women under Medicaid up to 185 percent of the FPL to SCHIP, expand the income limit to 200 percent of the FPL and use the savings to fund the expansion.

A final commenter felt that the purpose of the maintenance of effort provision in the March 5, 2002 proposed rule was unclear. This commenter advocated an interpretation that ''SCHIP coverage for fetuses picks up where Medicaid coverage of pregnant women ends.'' However, the commenter was concerned that, through application of the maintenance of effort provisions of title XXI, we might be purporting to redefine a child for purposes of Medicaid.

Response: We agree with the first commenter that title XXI's maintenance of effort requirements apply equally to unborn and born children. We do not agree that such application is punitive. By including section 2105(d) in the SCHIP legislation, the Congress sought to ensure that title XXI funds were used by States to expand coverage to new populations, not to take the place of Medicaid expenditures for populations already covered. Application of this principle is no different when coverage of prenatal care for an unborn child is at issue, than when coverage of children post-birth is at issue.

Accordingly, in applying the maintenance of effort requirements in the case of unborn children, enhanced Federal Medical Assistance Percentages (FMAP) will not be available if a State adopts income and resource standards and methodologies for purposes of determining eligibility for Medicaid under a group for pregnant women that are more restrictive than those applied under the policies of the State plan in effect on June 1, 1997. We are applying the maintenance of effort requirements to the Medicaid eligibility groups for pregnant women because the unborn child of a pregnant woman who is eligible for Medicaid receives the benefits of the prenatal care covered by Medicaid. Thus, to allow States to cover this an unborn child under SCHIP would result in precisely the kind of cost shifting between Medicaid and SCHIP that the Congress intended to preclude in § 2105(d) of the Act. Application of the maintenance of effort requirements in this way does not in any way alter the definition of child for purposes of Medicaid.

We agree with the commenters that the maintenance of effort requirements do not apply with respect to expansions of coverage for pregnant women implemented after June 1, 1997 (just as they do not apply to expansions of Medicaid coverage of children implemented after June 1, 1997.)

However, we do not believe that revision of this rule is necessary, as this fact is clearly stated in section 2105(d) of the Act as well as the implementing regulations at 42 CFR 433.11(b)(1).

Thus, States generally will not be permitted to drop optional coverage of pregnant women under Medicaid and pick up coverage of unborn children in the same income range under SCHIP, because most States expanded Medicaid coverage of pregnant women prior to June 1, 1997. However, as stated above, expansions implemented after June 1, 1997 are not subject to the maintenance of effort requirements. Thus, a State could eliminate an optional expansion of Medicaid coverage for pregnant women implemented after June 1, 1997 and pick up coverage for the unborn children of the affected women under SCHIP. Similarly, if a State does not already cover pregnant women between 185 percent and 200 percent of the Federal poverty level under Medicaid, it could extend coverage to unborn children in that income range under this regulation.

To permit a State to eliminate coverage of pregnant women implemented on or before June 1, 1997, and pick up coverage of their unborn children under SCHIP, would require that the Secretary waive the maintenance of effort requirements found in section 2105(d) of the Act. The Secretary has never approved a waiver of these requirements in the past and we do not believe that doing so would be consistent with the objectives of title XXI, as required by section 1115 of the Act.

7. Budget Implications

Comment: Numerous commenters noted that this rule does not bring new funding to SCHIP. Some stated that this rule also would increase the financial burden on SCHIP by expanding eligibility and could potentially result in inadequate funds for SCHIP coverage. Others noted that some States already are having trouble maintaining their SCHIP programs and may be freezing enrollment of currently eligible children. Some also noted that the high costs of in utero treatments make expanding care under this regulation less likely. One commenter stated that the expansion in eligibility should be accompanied by additional funds to allow for an increase in enrollment, not just a shift in priorities of the ''type'' of uninsured child to be covered.

One commenter felt that the lack of funds for this rule means that States also would have access to less Federal funds to provide care to poor immigrant women. Another commenter cited concern that because the current funding for SCHIP is not adequate to support comprehensive care, the rule could represent an unfunded mandate on States.

A number of these commenters argued that the Department should be making efforts to address the lack of funds to cover existing children. Some suggested that money should be added to other programs to provide prenatal care. One commenter noted in particular that the Administration's new budget contains no additional funding for the Maternal and Child Health grants, which could provide additional resources to pregnant women and their children. Some of the commenters noted that some bills currently pending before the Congress include additional funds for coverage of pregnant women, and that these funds would be available to States that already have expanded coverage to pregnant women under Medicaid.

Response: We recognize that States do not have access to unlimited Federal matching funds for SCHIP. As a result, each State will have to set its own priorities regarding the populations and services to be covered under its SCHIP program. This rule gives States an additional option—to cover prenatal care for unborn children under SCHIP. Some States may not choose to exercise this option, because they lack sufficient funds or for other reasons. This choice is left to each State.

Nearly all States still have unspent SCHIP funds and the President has proposed that the Congress extend the allotments from previous years that would otherwise be returned to the Federal treasury.

Finally, inasmuch as the regulation provides States with an option to extend coverage to unborn children under SCHIP, but does not mandate that they do so, it does not represent an unfunded mandate for States.

Comment: Some commenters mentioned that healthy babies are less expensive to care for than unhealthy babies, so that the cost of prenatal care can be recouped through reduced expenditures on subsequent intervention and surgeries. The commenters noted that this rule will prevent taxpayers from having to bear the burden of unhealthy babies, teens, and adults.

Response: We agree with the commenters. As explained in the March 5, 2002 proposed rule, it is well established that access to prenatal care can improve health outcomes during infancy as well as over a child's life. Since healthy babies and children require less medical care than babies and children with health problems, provision of prenatal care will result in lower medical expenditures for the affected children in the long run.

Comment: One commenter noted that this rule is more costly than other options, since States will receive the enhanced match available for services provided under SCHIP instead of their regular Medicaid match. The commenter further notes that, with the strict budget neutrality requirements of Health Insurance Flexibility and Accountability (HIFA), States are cutting back benefits to provide coverage. The commenter argues that cost savings derived from providing prenatal services through Medicaid could be used to provide benefits under HIFA.

Response: We agree that States can accomplish the goal of this regulation—increased access to prenatal care—by expanding Medicaid coverage of pregnant women, just as States can expand coverage to children under Medicaid, and that FFP would be available for services provided under the expansion at the State's regular Medicaid match.

With the passage of title XXI, the Congress created a greater incentive for States to expand coverage of low-income children. By expanding the definition of targeted low-income child to include an unborn child, we are extending the increased incentive created by the Congress to include coverage of prenatal services for unborn children.

HIFA provides a vehicle for States seeking to expand Medicaid coverage to populations not typically covered under Medicaid. Nothing in this regulation would preclude States from incorporating the provision of prenatal care into a HIFA waiver proposal, and CMS staff is available to work with any State that may want to do so.

8. Miscellaneous

Comment: Several commenters noted that generally, an American citizen is only counted for taxation purposes after they are born. They asked if granting of legal personhood under this rule mean that unborn children could be taxed inside the womb? Alternatively, the commenters asked, could they be claimed as a deduction before they are born?

Response: The regulation does not purport, nor do we have the authority, to alter the definition of a child or individual for purposes of Federal or State tax statutes or regulations.

IV. Provisions of the Final Rule

In the preamble of the March 5, 2002 proposed rule, we noted an error that we have corrected. The preamble stated that we proposed to revise the definition at § 457.10 to clarify that ''child'' means an individual under the age of 19 and may include any period of time from conception to birth through age 19. This should have been stated as up to age 19 and has been corrected. In this final rule, we are adopting the provisions of the March 5, 2002 proposed rule, without change.

V. Collection of Information Requirements

States that opt to extend eligibility to unborn children must submit a State plan amendment in accordance with § 457.60. OMB has approved information collection requirements associated with SCHIP State plan amendments under OMB approval number OMB–0938–0841.

VI. Regulatory Impact Statement

We have examined the impacts of this rule as required by Executive Order 12866 (September 1993, Regulatory Planning and Review), the Regulatory Flexibility Act (RFA) (September 16, 1980, Pub. L. 96–354), section 1102(b) of the Social Security Act, the Unfunded Mandates Reform Act of 1995 (Pub. L. 104–4), and Executive Order 13132.

Executive Order 12866 directs agencies to assess all costs and benefits of available regulatory alternatives and, if regulation is necessary, to select regulatory approaches that maximize net benefits (including potential economic, environmental, public health and safety effects, distributive impacts, and equity). A regulatory impact analysis (RIA) must be prepared for major rules with economically significant effects ($100 million or more in any 1 year).

The RFA requires agencies to analyze options for regulatory relief of small businesses. For purposes of the RFA, small entities include small businesses, nonprofit organizations, and government agencies. Most hospitals and most other providers and suppliers are small entities, either by nonprofit status or by having revenues of $6 to $29 million in any 1 year. Individuals and States are not included in the definition of a small entity.

In addition, section 1102(b) of the Act requires us to prepare a regulatory impact analysis if a rule may have a significant impact on the operations of a substantial number of small rural hospitals. This analysis must conform to the provisions of 604 of the RFA. For purposes of section 1102(b) of the Act, we define a small rural hospital as a hospital that is located outside of a Metropolitan Statistical Area and has fewer than 100 beds.

Section 202 of the Unfunded Mandates Reform Act of 1995 also requires that agencies assess anticipated costs and benefits before issuing any rule that may result in expenditure in any 1 year by State, local, or tribal governments, in the aggregate, or by the private sector, of $110 million.

Executive Order 13132 establishes certain requirements that an agency must meet when it promulgates a final rule that imposes substantial direct costs on State and local governments, preempts State law, or otherwise has Federalism implications. The option for States to extend coverage to unborn children promulgated in this final rule does not meet the criteria for having Federalism implications. This provision does not impose direct costs on States or local governments, nor does it preempt State laws. This new option only increases State flexibility and, therefore, prior consultation is not required.

This final rule revises and clarifies the definition of ''child'' under the State Children's Health Insurance Program (SCHIP) to provide that an unborn child may be considered a ''targeted low-income child'' by the State and therefore eligible for SCHIP if other applicable State eligibility requirements are met. We estimate that 13 States will elect to include this definition in their State plans. We also estimate that an additional 30,000 unborn children will benefit by this change. In States that adopt this option, the health status of children will improve to the extent that their mothers receive prenatal care.

We developed cost estimates based on the following assumptions and calculations. We excluded from the calculations a few States that already have eligibility for pregnant women under SCHIP, as well as those that appear likely to exhaust their Federal SCHIP funding at some point. We assumed that each remaining State would have a one-third probability of taking the proposed option to cover unborn children. The increase in SCHIP spending for a State picking up the option was based on Current Population Survey data on the number of infants relative to the total population of children between 100 percent and 200 percent of poverty in the State. The infant count was used as a proxy for pregnant women. Per-person costs were assumed to be twice that of a child on SCHIP.

The costs also include an increase in Medicaid spending as a result of the rule. The reason for this is that, with more SCHIP allotments being spent on unborn children, less is available for redistribution to States that expend all their allotments. Some of these States will run short of funds, and those that are using Medicaid expansions in their SCHIPs will get FFP at the regular matching rate, thus increasing title XIX expenditures.

Regarding state take-up: The estimating model is based on iterative simulations using the one-third participation probability assumption, so there is not a specific set of States that we assume will take the option. Although on average the number of states participating is about a dozen.

Based on the assumptions, we estimate that the budget impact will be $330 million over a 5-year period. Please see the table below.

NET MEDICAID AND SCHIP COSTS—WITH BUYOUT OF POST-BBA

	2003	2004	2005	2006	2007	2003–7
Federal cost	98	44	81	93	14	330

Therefore, the provisions set forth in this rule will not have an impact of $110 million or more in any one year. Neither is this rule expected to impose an unfunded mandate on States exceeding $110 million in any 1 year. Therefore, we have not prepared an analysis of cost and benefits as required by E.O. 12866 and the Unfunded Mandates Act for rules with significant economic impacts or that impose significant unfunded mandates on States. Also, we believe the changes being promulgated in this document will have very little direct impact on small entities as defined under the RFA or on small rural hospitals as defined under section 1102(b) of the Social Security Act. Therefore, we are not preparing analyses for either the RFA or section 1102(b) of the Act because we have determined,

and we certify, that this rule will not have a significant economic impact on a substantial number of small entities or a significant impact on the operations of a substantial number of small rural hospitals.

In accordance with the provisions of Executive Order 12866, this regulation was reviewed by the Office of Management and Budget.

List of Subjects in 42 CFR Part 457

Administrative practice and procedure, Grant programs-health, Children's Health Insurance Program, Reporting and recordkeeping requirements.

For the reasons set forth in the preamble, 42 CFR part 457 is amended as set forth below:

PART 457—ALLOTMENTS AND GRANTS TO STATES

1. The authority citation for part 457 continues to read as follows:

Authority: Section 1102 of the Social Security Act (42 U.S.C. 1302).

Subpart A—Introduction; State Plans for Child Health Insurance Programs and Outreach Strategies

2. In § 457.10, the definition of ''child'' is revised to read as follows:

§ 457.10 Definitions and use of terms.

* * * * *

Child means an individual under the age of 19 including the period from conception to birth.

* * * * *

Subpart C—State Plan Requirements: Eligibility, Screening, Applications, and Enrollment

3. Amend § 457.350 as follows:

A. Redesignate the text of paragraph (b) following the heading as (b)(1).

B. Add a new paragraph (b)(2) to read as follows:

§ 457.350 Eligibility screening and facilitation of Medicaid enrollment.

* * * * *

(b) Screening objectives. (1) * * *

(2) Screening procedures must also identify any applicant or enrollee who would be potentially eligible for Medicaid services based on the eligibility of his or her mother under one of the poverty level groups described in section 1902(l) of the Act, section 1931 of the Act, or a Medicaid demonstration project approved under section 1115 of the Act.

* * * * *

Subpart F—Payment to States

4. Revise § 457.622(c)(5) to read as follows:

§ 457.622 Rate of FFP for State expenditures.

* * * * *

(c) * * *

(5) For States that elect to extend eligibility to unborn children under the approved Child Health Plan, the State does not adopt eligibility standards and methodologies for purposes of determining a child's eligibility under the Medicaid State plan that were more restrictive than those applied under policies of the State plan in effect on June 1, 1997. This limitation applies also to more restrictive standards and methodologies for determining eligibility for services for a child based on the eligibility of a pregnant woman.

* * * * *

5. Amend § 457.626 by adding a new paragraph (a)(3) to read as follows:

§ 457.626 Prevention of duplicate payments.

(a) * * *

(3) Services are for an unborn child and are payable under Medicaid as a service to an eligible pregnant woman under that program.

* * * * *

(Catalog of Federal Domestic Assistance Program No. 93.767, State Children's Health Insurance Program)

Dated: August 4, 2002.

Thomas A. Scully,

Administrator, Centers for Medicare & Medicaid Services.

Approved: August 8, 2002.

Tommy G. Thompson,

Secretary.

[FR Doc. 02–24856 Filed 9–27–02; 8:45 am]

BILLING CODE 4120–01–P

Reader Aids

Federal Register

Vol. 67, No. 191

Wednesday, October 2, 2002

CUSTOMER SERVICE AND INFORMATION

Federal Register/Code of Federal Regulations	
General Information, indexes and other finding aids	**202–741–6000**
Laws	**741–6000**
Presidential Documents	
Executive orders and proclamations	**741–6000**
The United States Government Manual	**741–6000**
Other Services	
Electronic and on-line services (voice)	**741–6020**
Privacy Act Compilation	**741–6064**
Public Laws Update Service (numbers, dates, etc.)	**741–6043**
TTY for the deaf-and-hard-of-hearing	**741–6086**

ELECTRONIC RESEARCH

World Wide Web

Full text of the daily Federal Register, CFR and other publications is located at: **http://www.access.gpo.gov/nara**

Federal Register information and research tools, including Public Inspection List, indexes, and links to GPO Access are located at: **http://www.archives.gov/federal__register/**

E-mail

FEDREGTOC-L (Federal Register Table of Contents LISTSERV) is an open e-mail service that provides subscribers with a digital form of the Federal Register Table of Contents. The digital form of the Federal Register Table of Contents includes HTML and PDF links to the full text of each document.

To join or leave, go to **http://listserv.access.gpo.gov** and select *Online mailing list archives, FEDREGTOC-L, Join or leave the list (or change settings);* then follow the instructions.

PENS (Public Law Electronic Notification Service) is an e-mail service that notifies subscribers of recently enacted laws.

To subscribe, go to **http://hydra.gsa.gov/archives/publaws-l.html** and select *Join or leave the list* (or change settings); then follow the instructions.

FEDREGTOC-L and **PENS** are mailing lists only. We cannot respond to specific inquiries.

Reference questions. Send questions and comments about the Federal Register system to: **info@fedreg.nara.gov**

The Federal Register staff cannot interpret specific documents or regulations.

FEDERAL REGISTER PAGES AND DATE, OCTOBER

61467–61760 1
61761–61974 2

CFR PARTS AFFECTED DURING OCTOBER

At the end of each month, the Office of the Federal Register publishes separately a List of CFR Sections Affected (LSA), which lists parts and sections affected by documents published since the revision date of each title.

4 CFR

Proposed Rules:
21 61542

5 CFR

2634 61761
2635 61761

7 CFR

29 61467
1260 61762
1400 61468
1412 61470

Proposed Rules:
97 61545
300 61547
319 61547
1424 61565

8 CFR

103 61474
214 61474

Proposed Rules:
103 61568
214 61568
248 61568
264 61568

9 CFR

331 61767
381 61767

12 CFR

226 61769

13 CFR

Proposed Rules:
121 61829

14 CFR

39 ..... 61476, 61478, 61481, 61770, 61771

Proposed Rules:
25 61836
39 ..... 61569, 61842, 61843

15 CFR

990 61483

21 CFR

101 61773
173 61783

24 CFR

92 61752

33 CFR

165 61494

40 CFR

52 ..... 61784, 61786
81 61786
300 61802

Proposed Rules:
300 61844

42 CFR

413 61496
457 61956
460 61496
482 ..... 61805, 61808
483 61808
484 61808

43 CFR

4 61506
2930 61732
3800 61732
6300 61732
8340 61732
8370 61732
9260 61732

Proposed Rules:
2930 61746

44 CFR

201 61512
206 61512

47 CFR

25 61814
73 ..... 61515, 61816

Proposed Rules:
73 ..... 61572, 61845

48 CFR

206 61516
207 61516
217 61516
223 61516
237 61516
242 61516
245 61516
247 61516
1833 61519
1852 61519
1872 61519

49 CFR

40 61521
350 61818
360 61818
365 61818
372 61818
382 61818
383 61818
386 61818
387 61818
388 61818
390 61818
391 61818
393 61818
571 61523

50 CFR

17 61531
600 61824
635 61537
660 61824
679 .....61826, 61827
Proposed Rules:
17 61845

REMINDERS

The items in this list were editorially compiled as an aid to Federal Register users. Inclusion or exclusion from this list has no legal significance.

RULES GOING INTO EFFECT OCTOBER 2, 2002

AGRICULTURE DEPARTMENT

Agricultural Marketing Service

Tobacco inspection:

Flue-Cured Tobacco Advisory Committee; membership regulations amendments; published 10-1-02

COMMERCE DEPARTMENT

National Oceanic and Atmospheric Administration

Fishery conservation and management:

Alaska; fisheries of Exclusive Economic Zone—

Pollock; published 10-2-02

ENVIRONMENTAL PROTECTION AGENCY

Air quality implementation plans; approval and promulgation; various States; air quality planning purposes; designation of areas:

Louisiana; published 10-2-02

GOVERNMENT ETHICS OFFICE

Executive Branch regulations:

Financial disclosure and standards of ethical conduct for Executive Branch employees; published 10-2-02

HEALTH AND HUMAN SERVICES DEPARTMENT

Centers for Medicare & Medicaid Services

Medicare and medicaid:

Hospitals, long-term care facilities, and home health agencies; immunization standards conditions of participation; published 10-2-02

HEALTH AND HUMAN SERVICES DEPARTMENT

Food and Drug Administration

Food additives:

Secondary direct food additives—

Peroxyacetic acid, etc.; published 10-2-02

Food for human consumption:

Food labeling—

Soluble dietary fiber and coronary heart disease; health claims; published 10-2-02

TRANSPORTATION DEPARTMENT

Federal Motor Carrier Safety Administration

Motor carrier safety regulations:

Technical amendments; published 10-2-02

COMMENTS DUE NEXT WEEK

AGRICULTURE DEPARTMENT

Agricultural Marketing Service

Oranges, grapefruit, tangerines, and tangelos grown in—

Florida; comments due by 10-10-02; published 9-10-02 [FR 02-23027]

AGRICULTURE DEPARTMENT

Agricultural Marketing Service

Peanuts, domestic and imported, marketed in United States; minimum quality and handling standards; comments due by 10-9-02; published 9-9-02 [FR 02-22700]

AGRICULTURE DEPARTMENT

Animal and Plant Health Inspection Service

Agricultural Bioterrorism Protection Act:

Biological agents and toxins; possession; comments due by 10-11-02; published 8-12-02 [FR 02-20354]

AGRICULTURE DEPARTMENT

Food and Nutrition Service

Child nutrition programs:

Free and reduced price meals and free milk in schools—

Eligibility determination; verification reporting and recordkeeping requirements; comments due by 10-8-02; published 8-9-02 [FR 02-20163]

COMMERCE DEPARTMENT

National Oceanic and Atmospheric Administration

Endangered and threatened species:

Critical habitat designations—

Gulf sturgeon; comments due by 10-7-02; published 8-8-02 [FR 02-20091]

Fishery conservation and management:

Alaska; fisheries of Exclusive Economic Zone—

American Fisheries Act inshore cooperative requirements; comments due by 10-7-02; published 8-23-02 [FR 02-21457]

Atlantic coastal fisheries cooperative management—

American lobster; environmental impact statement; comments due by 10-7-02; published 9-5-02 [FR 02-22620]

West Coast States and Western Pacific fisheries—

West Coast salmon; comments due by 10-11-02; published 9-26-02 [FR 02-24371]

EDUCATION DEPARTMENT

Postsecondary education:

Institutional eligibility; various loan and grant programs; comments due by 10-7-02; published 8-8-02 [FR 02-20058]

Student Assistance General Provisions and Federal Perkins Loan, Federal Family Education Loan, and William D. Ford Direct Loan Programs; comments due by 10-7-02; published 8-6-02 [FR 02-19521]

ENERGY DEPARTMENT

Energy Efficiency and Renewable Energy Office

Energy conservation:

Alternative fuel transportation program—

Fischer-Tropsch diesel fuels; workshop, etc.; comments due by 10-10-02; published 9-10-02 [FR 02-22908]

ENVIRONMENTAL PROTECTION AGENCY

Air pollution control:

State operating permits programs—

Maryland; comments due by 10-10-02; published 9-10-02 [FR 02-23081]

ENVIRONMENTAL PROTECTION AGENCY

Air quality implementation plans; approval and promulgation; various States:

Indiana; comments due by 10-11-02; published 9-11-02 [FR 02-22979]

ENVIRONMENTAL PROTECTION AGENCY

Air quality implementation plans; approval and promulgation; various States:

Indiana; comments due by 10-11-02; published 9-11-02 [FR 02-22980]

ENVIRONMENTAL PROTECTION AGENCY

Air quality implementation plans; approval and promulgation; various States:

Maine; comments due by 10-9-02; published 9-9-02 [FR 02-22359]

ENVIRONMENTAL PROTECTION AGENCY

Air quality implementation plans; approval and promulgation; various States:

Maine; comments due by 10-9-02; published 9-9-02 [FR 02-22360]

ENVIRONMENTAL PROTECTION AGENCY

Air quality implementation plans; approval and promulgation; various States:

Minnesota; comments due by 10-11-02; published 9-11-02 [FR 02-22977]

ENVIRONMENTAL PROTECTION AGENCY

Air quality implementation plans; approval and promulgation; various States:

Minnesota; comments due by 10-11-02; published 9-11-02 [FR 02-22978]

ENVIRONMENTAL PROTECTION AGENCY

Air quality implementation plans; approval and promulgation; various States:

Pennsylvania; comments due by 10-9-02; published 9-9-02 [FR 02-22727]

ENVIRONMENTAL PROTECTION AGENCY

Air quality implementation plans; approval and promulgation; various States:

Pennsylvania; comments due by 10-9-02; published 9-9-02 [FR 02-22728]

Utah; comments due by 10-10-02; published 9-10-02 [FR 02-22986]

ENVIRONMENTAL PROTECTION AGENCY

Air quality planning purposes; designation of areas:

Louisiana; comments due by 10-10-02; published 9-10-02 [FR 02-22983]

ENVIRONMENTAL PROTECTION AGENCY

Air quality planning purposes; designation of areas:

Louisiana; comments due by 10-10-02; published 9-10-02 [FR 02-22984]

Grants and other Federal assistance:

Clean Air Act Tribal authority—

Idaho, Oregon, and Washington; Indian reservations; Federal implementation plans; comments due by 10-10-02; published 8-9-02 [FR 02-19440]

Hazardous waste program authorizations:

Minnesota; comments due by 10-9-02; published 9-9-02 [FR 02-22810]

Radiation protection programs:

Transuranic radioactive waste for disposal at Waste Isolation Pilot Plant; waste characterization program documents availability—

Nevada Test Site, NV; comments due by 10-9-02; published 9-9-02 [FR 02-22801]

EQUAL EMPLOYMENT OPPORTUNITY COMMISSION

Age Discrimination in Employment Act:

Processing of age discrimination charges; comments due by 10-11-02; published 8-12-02 [FR 02-20126]

FEDERAL ELECTION COMMISSION

Coordinated and independent expenditures; comments due by 10-11-02; published 9-24-02 [FR 02-23813]

HEALTH AND HUMAN SERVICES DEPARTMENT

Centers for Medicare & Medicaid Services

Medicare:

Hospital outpatient prospective payment system and 2003 FY rates; comments due by 10-8-02; published 8-9-02 [FR 02-20146]

HOUSING AND URBAN DEVELOPMENT DEPARTMENT

Mortgage and loan insurance programs:

Owners of projects receiving section 236 rental assistance; participation in retaining some or all of excess rental charges for project use, etc.; comments due by 10-11-02; published 8-12-02 [FR 02-20022]

HOUSING AND URBAN DEVELOPMENT DEPARTMENT

Mortgage and loan insurance programs:

Single family mortgage insurance—

Section 203(k) consultant placement and removal procedures; comments due by 10-8-02; published 8-9-02 [FR 02-20240]

INTERIOR DEPARTMENT

Indian Affairs Bureau

Land and water:

Indian Reservation Roads Program; comments due by 10-7-02; published 8-7-02 [FR 02-18801]

INTERIOR DEPARTMENT

Fish and Wildlife Service

Endangered and threatened species:

Black-footed ferrets; nonessential experimental population establishment in south-central South Dakota; comments due by 10-11-02; published 9-11-02 [FR 02-23068]

Critical habitat designations—

Gila chub; comments due by 10-8-02; published 8-9-02 [FR 02-19872]

Gulf sturgeon; comments due by 10-7-02; published 8-8-02 [FR 02-20091]

Flat-tailed horned lizard; comments due by 10-9-02; published 9-24-02 [FR 02-24025]

JUSTICE DEPARTMENT

Radiation Exposure Compensation Act Amendments of 2000; claims:

Uranium millers, ore transporters, and miners; coverage expansion; representation and fees; comments due by 10-7-02; published 8-7-02 [FR 02-19222]

NUCLEAR REGULATORY COMMISSION

Federal Advisory Committee Act regulations; comments due by 10-7-02; published 8-8-02 [FR 02-19941]

Spent nuclear fuel and high-level radioactive waste; independent storage; licensing requirements:

Dry cask independent spent fuel and monitored retrievable storage installations; siting and design; geological and seismological characteristics; comments due by 10-7-02; published 7-22-02 [FR 02-18436]

SECURITIES AND EXCHANGE COMMISSION

Sarbanes-Oxley Act of 2002; implementation:

Annual and quarterly company reports; disclosure certification; comments due by 10-9-02; published 9-9-02 [FR 02-22572]

SMALL BUSINESS ADMINISTRATION

Small business size standards:

Nonmanufacturer rule; waivers—

Plain unmounted bearings and mounted bearings; comments due by 10-11-02; published 9-27-02 [FR 02-24558]

TRANSPORTATION DEPARTMENT

Coast Guard

Anchorage regulations:

Maine; comments due by 10-7-02; published 7-8-02 [FR 02-17003]

Drawbridge operations:

Connecticut; comments due by 10-10-02; published 9-10-02 [FR 02-22947]

Florida; comments due by 10-7-02; published 8-7-02 [FR 02-19998]

Ports and waterways safety:

Boston Harbor, MA; Aggregate Industries Fireworks display; safety zone; comments due by 10-10-02; published 9-20-02 [FR 02-23916]

Oahu, Maui, Hawaii, and Kauai, HI; anchorages and security zones; comments due by 10-8-02; published 9-3-02 [FR 02-22340]

Vessel documentation and measurement:

Coastwise trade vessels; lease financing; comments due by 10-8-02; published 8-9-02 [FR 02-20244]

TRANSPORTATION DEPARTMENT

Federal Aviation Administration

Administrative regulations:

Aviation Safety Action Programs information; protection from disclosure; comments due by 10-7-02; published 9-5-02 [FR 02-22270]

Flight Operational Quality Assurance Program information; protection from disclosure; comments due by 10-7-02; published 9-5-02 [FR 02-22269]

Aircraft:

Fuel tank system fault tolerance evaluations; equivalent safety provisions; comments due by 10-10-02; published 9-10-02 [FR 02-22622]

TRANSPORTATION DEPARTMENT

Federal Aviation Administration

Airworthiness directives:

Ballonbau Worner GmbH; comments due by 10-10-02; published 8-30-02 [FR 02-22128]

TRANSPORTATION DEPARTMENT

Federal Aviation Administration

Airworthiness directives:

Bell; comments due by 10-7-02; published 8-6-02 [FR 02-19486]

TRANSPORTATION DEPARTMENT

Federal Aviation Administration

Airworthiness directives:

Bell; comments due by 10-7-02; published 8-7-02 [FR 02-19875]

TRANSPORTATION DEPARTMENT

Federal Aviation Administration

Airworthiness directives:

Bell; correction; comments due by 10-7-02; published 8-21-02 [FR C2-19486]

TRANSPORTATION DEPARTMENT

Federal Aviation Administration

Airworthiness directives:

Boeing; comments due by 10-7-02; published 8-23-02 [FR 02-21509]

TRANSPORTATION DEPARTMENT

Federal Aviation Administration

Airworthiness directives:

Boeing; comments due by 10-11-02; published 8-12-02 [FR 02-19878]

TRANSPORTATION DEPARTMENT

Federal Aviation Administration

Airworthiness directives:

McDonnell Douglas; comments due by 10-7-02; published 8-7-02 [FR 02-19879]

TRANSPORTATION DEPARTMENT

Federal Aviation Administration

Airworthiness directives:

McDonnell Douglas; comments due by 10-7-02; published 8-23-02 [FR 02-21508]

Class D and Class E airspace; comments due by 10-7-02; published 8-28-02 [FR 02-21136]

TRANSPORTATION DEPARTMENT

Federal Aviation Administration

Class E airspace; comments due by 10-10-02; published 9-4-02 [FR 02-22496]

TRANSPORTATION DEPARTMENT

Federal Aviation Administration

Class E airspace; comments due by 10-11-02; published 8-27-02 [FR 02-21137]

Class E airspace; correction; comments due by 10-11-02; published 8-30-02 [FR C2-21576]

TRANSPORTATION DEPARTMENT

National Highway Traffic Safety Administration

Motor vehicle safety standards:

Accelerator control systems

Correction; comments due by 10-7-02; published 9-24-02 [FR 02-24123]

TRANSPORTATION DEPARTMENT

Surface Transportation Board

Fees:

Licensing and related services; 2002 update; comments due by 10-11-02; published 9-11-02 [FR 02-22918]

Practice and procedure:

Rate challenges; expedited resolution under stand-alone cost methodology; comments due by 10-9-02; published 9-11-02 [FR 02-22808]

TREASURY DEPARTMENT

Alcohol, Tobacco and Firearms Bureau

Alcoholic beverages:

Wine; labeling and advertising—

American wines; Petite Sirah and Zinfandel; new prime grape variety names; comments due by 10-8-02; published 6-6-02 [FR 02-14132]

TREASURY DEPARTMENT

Foreign Assets Control Office

Sudan, Libya, and Iran; agricultural commodities, medicine, and medical devices exportation; licensing procedures; comments due by 10-7-02; published 9-6-02 [FR 02-22689]

TREASURY DEPARTMENT

Internal Revenue Service

Income taxes:

Welfare beneft fund; guidance regarding whether part of 10 or more employer plan; comments due by 10-9-02; published 7-11-02 [FR 02-17469]

Income, employment, and gift taxes:

Split-dollar life insurance arrangements; comments due by 10-7-02; published 7-9-02 [FR 02-17042]

LIST OF PUBLIC LAWS

This is a continuing list of public bills from the current session of Congress which have become Federal laws. It may be used in conjunction with ''P L U S'' (Public Laws Update Service) on 202–741–6043. This list is also available online at *http://www.nara.gov/fedreg/plawcurr.html*.

The text of laws is not published in the **Federal Register** but may be ordered in ''slip law'' (individual pamphlet) form from the Superintendent of Documents, U.S. Government Printing Office, Washington, DC 20402 (phone, 202–512–1808). The text will also be made available on the Internet from GPO Access at *http://www.access.gpo.gov/nara/nara005.html*. Some laws may not yet be available.

H.R. 1646/P.L. 107–228

Foreign Relations Authorization Act, Fiscal Year 2003 (Sept. 30, 2002; 116 Stat. 1350)

H.J. Res. 111/P.L. 107–229

Making continuing appropriations for the fiscal year 2003, and for other purposes. (Sept. 30, 2002; 116 Stat. 1465)

Last List September 26, 2002

Public Laws Electronic Notification Service (PENS)

PENS is a free electronic mail notification service of newly enacted public laws. To subscribe, go to *http://hydra.gsa.gov/archives/publaws-l.html* or send E-mail to **listserv@listserv.gsa.gov** with the following text message:

SUBSCRIBE PUBLAWS-L Your Name.

Note: This service is strictly for E-mail notification of new laws. The text of laws is not available through this service. **PENS** cannot respond to specific inquiries sent to this address.