AUTHENTICATED
U.S. GOVERNMENT
INFORMATION
GPO

Federal Register

8–8–02 Thursday
Vol. 67 No. 153 August 8, 2002
Pages 51459–51750

The **FEDERAL REGISTER** is published daily, Monday through Friday, except official holidays, by the Office of the Federal Register, National Archives and Records Administration, Washington, DC 20408, under the Federal Register Act (44 U.S.C. Ch. 15) and the regulations of the Administrative Committee of the Federal Register (1 CFR Ch. I). The Superintendent of Documents, U.S. Government Printing Office, Washington, DC 20402 is the exclusive distributor of the official edition.

The **Federal Register** provides a uniform system for making available to the public regulations and legal notices issued by Federal agencies. These include Presidential proclamations and Executive Orders, Federal agency documents having general applicability and legal effect, documents required to be published by act of Congress, and other Federal agency documents of public interest.

Documents are on file for public inspection in the Office of the Federal Register the day before they are published, unless the issuing agency requests earlier filing. For a list of documents currently on file for public inspection, see http://www.nara.gov/fedreg.

The seal of the National Archives and Records Administration authenticates the Federal Register as the official serial publication established under the Federal Register Act. Under 44 U.S.C. 1507, the contents of the **Federal Register** shall be judicially noticed.

The **Federal Register** is published in paper and on 24x microfiche. It is also available online at no charge as one of the databases on GPO Access, a service of the U.S. Government Printing Office.

The online edition of the **Federal Register** is issued under the authority of the Administrative Committee of the Federal Register as the official legal equivalent of the paper and microfiche editions (44 U.S.C. 4101 and 1 CFR 5.10). It is updated by 6 a.m. each day the **Federal Register** is published and it includes both text and graphics from Volume 59, Number 1 (January 2, 1994) forward.

GPO Access users can choose to retrieve online **Federal Register** documents as TEXT (ASCII text, graphics omitted), PDF (Adobe Portable Document Format, including full text and all graphics), or SUMMARY (abbreviated text) files. Users should carefully check retrieved material to ensure that documents were properly downloaded.

On the World Wide Web, connect to the **Federal Register** at http://www.access.gpo.gov/nara. Those without World Wide Web access can also connect with a local WAIS client, by Telnet to swais.access.gpo.gov, or by dialing (202) 512–1661 with a computer and modem. When using Telnet or modem, type swais, then log in as guest with no password.

For more information about GPO Access, contact the GPO Access User Support Team by E-mail at gpoaccess@gpo.gov; by fax at (202) 512–1262; or call (202) 512–1530 or 1–888–293–6498 (toll free) between 7 a.m. and 5 p.m. Eastern time, Monday–Friday, except Federal holidays.

The annual subscription price for the **Federal Register** paper edition is $699, or $764 for a combined **Federal Register, Federal Register** Index and List of CFR Sections Affected (LSA) subscription; the microfiche edition of the **Federal Register** including the **Federal Register** Index and LSA is $264. Six month subscriptions are available for one-half the annual rate. The charge for individual copies in paper form is $10.00 for each issue, or $10.00 for each group of pages as actually bound; or $2.00 for each issue in microfiche form. All prices include regular domestic postage and handling. International customers please add 25% for foreign handling. Remit check or money order, made payable to the Superintendent of Documents, or charge to your GPO Deposit Account, VISA, MasterCard or Discover. Mail to: New Orders, Superintendent of Documents, P.O. Box 371954, Pittsburgh, PA 15250–7954.

There are no restrictions on the republication of material appearing in the **Federal Register.**

How To Cite This Publication: Use the volume number and the page number. Example: 67 FR 12345.

SUBSCRIPTIONS AND COPIES

PUBLIC

Subscriptions:

Paper or fiche	**202–512–1800**
Assistance with public subscriptions	**202–512–1806**

General online information **202–512–1530; 1–888–293–6498**

Single copies/back copies:

Paper or fiche	**202–512–1800**
Assistance with public single copies	**1–866–512–1800 (Toll-Free)**

FEDERAL AGENCIES

Subscriptions:

Paper or fiche	**202–523–5243**
Assistance with Federal agency subscriptions	**202–523–5243**

What's NEW!

Federal Register Table of Contents via e-mail

Subscribe to FEDREGTOC, to receive the **Federal Register** Table of Contents in your e-mail every day.

If you get the HTML version, you can click directly to any document in the issue.

To subscribe, go to **http://listserv.access.gpo.gov** and select:

Online mailing list archives
FEDREGTOC-L
Join or leave the list

Then follow the instructions.

FEDERAL REGISTER WORKSHOP

THE FEDERAL REGISTER: WHAT IT IS AND HOW TO USE IT

FOR: Any person who uses the **Federal Register** and Code of Federal Regulations.

WHO: Sponsored by the Office of the Federal Register.

WHAT: Free public briefings (approximately 3 hours) to present:

1. The regulatory process, with a focus on the Federal Register system and the public's role in the development of regulations.
2. The relationship between the **Federal Register** and Code of Federal Regulations.
3. The important elements of typical **Federal Register** documents.
4. An introduction to the finding aids of the FR/CFR system.

WHY: To provide the public with access to information necessary to research Federal agency regulations which directly affect them. There will be no discussion of specific agency regulations.

WASHINGTON, DC

WHEN: September 24, 2002—9:00 a.m. to noon

WHERE: Office of the Federal Register
Conference Room
800 North Capitol Street, NW.
Washington, DC
(3 blocks north of Union Station Metro)

RESERVATIONS: 202–523–4538; or
info@fedreg.nara.gov

Printed on recycled paper.

Contents

Federal Register

Vol. 67, No. 153

Thursday, August 8, 2002

Agricultural Marketing Service
RULES
Cherries (tart) grown in—
Various States, 51697–51715

Agriculture Department
See Agricultural Marketing Service
See Animal and Plant Health Inspection Service
See Forest Service

Animal and Plant Health Inspection Service
RULES
Plant-related quarantine, domestic:
Citrus canker, 51459

Arts and Humanities, National Foundation
See National Foundation on the Arts and the Humanities

Centers for Disease Control and Prevention
NOTICES
Meetings:
Fetal Alcohol Syndrome and Fetal Alcohol Effect National Task Force, 51584
Patent licenses; non-exclusive, exclusive, or partially exclusive:
Antibody Systems, Inc., 51584–51585
Reports and guidance documents; availability, etc.:
National Health and Nutrition Examination Survey III; DNA specimens; samples use and cost schedule; guidelines, 51585–51589

Children and Families Administration
See Community Services Office

Commerce Department
See Foreign-Trade Zones Board
See International Trade Administration
See National Institute of Standards and Technology
See National Oceanic and Atmospheric Administration

Community Services Office
NOTICES
Grants and cooperative agreements; availability, etc.:
Community Economic Development Program, 51669–51696

Customs Service
PROPOSED RULES
Vessels in foreign and domestic trades:
Manifest information; advance and accurate presentation prior to lading at foreign port, 51519–51524

Education Department
PROPOSED RULES
Postsecondary education:
Institutional eligibility; various loan and grant programs, 51717–51741
NOTICES
Agency information collection activities:
Proposed collection; comment request, 51548–51549
Grants and cooperative agreements; availability, etc.:
Special education and rehabilitative services—
Alternative Financing Program Technical Assistance, 51743–51745
State Program Improvement Program, 51747–51750
Meetings:
Educational Excellence for Hispanic Americans, President's Advisory Commission, 51549

Energy Department
See Federal Energy Regulatory Commission
See Southeastern Power Administration
See Western Area Power Administration
NOTICES
Electricity export and import authorizations, permits, etc.:
Coral Power, L.L.C., 51549
Grants and cooperative agreements; availability, etc.:
Rare Isotope Accelerator research and development projects, 51550–51551

Environmental Protection Agency
RULES
Air pollution control; new motor vehicles and engines:
Heavy-duty diesel engines and vehicles; 2004 and later model year emission standards; nonconformance penalties, 51464–51478
Air quality implementation plans; approval and promulgation; various States:
North Carolina, 51461–51464
Hazardous waste program authorizations:
Delaware, 51478–51480
Air programs:
Transportation conformnity; initial STP submissions 18-month requirement and newly designated nonattainment areas grace period [**Editorial Note:** This document, published at 67 FR 50808 in the **Federal Register** of Tuesday, August 6, 2002, was erroneously listed with ''Michigan'' at the beginning of its entry in that issue's table of contents. This document actually applies to all States, not just Michigan.]
PROPOSED RULES
Air quality implementation plans:
Preparation, adoption, and submittal—
State implementation plan procedural regulations; amendment, 51525–51527
Air quality implementation plans; approval and promulgation; various States:
North Carolina, 51527
Superfund program:
National oil and hazardous substances contingency plan—
National priorities list update, 51528–51530
Water pollution; effluent guidelines for point source categories:
Construction and development; storm water discharges
Meetings; Water Docket location change, 51527–51528

Executive Office of the President
See Trade Representative, Office of United States

Federal Aviation Administration
RULES
Airworthiness directives:
Airbus; correction, 51459–51461

Federal Communications Commission
NOTICES
Agency information collection activities:
Proposed collection; comment request, 51581
Common carrier services:
Wireline Competition Bureau; routing and rating of traffic by incumbent local exchange carriers; comment request, 51581–51583

Federal Election Commission
NOTICES
Meetings; Sunshine Act, 51583

Federal Energy Regulatory Commission
PROPOSED RULES
Practice and procedure:
Market-based rate contracts for wholesale sales of electric energy by public utilities; standard of review for changes, 51516–51519
NOTICES
Agency information collection activities:
Submission for OMB review; comment request, 51551–51552
Electric rate and corporate regulation filings:
Genova Oklahoma I, LLC, et al., 51552–51553
Electric rate and corporate regulation findings:
Wisconsin Public Service Corp. et al., 51553–51556
Hydroelectric applications, 51556–51564
Meetings:
Public meeting schedule change, 51564
Applications, hearings, determinations, etc.:
FirstEnergy Solutions Corp. et al., 51552

Federal Reserve System
NOTICES
Banks and bank holding companies:
Change in bank control, 51583
Formations, acquisitions, and mergers, 51583–51584

Federal Retirement Thrift Investment Board
NOTICES
Meetings; Sunshine Act, 51584

Fish and Wildlife Service
PROPOSED RULES
Endangered and threatened species:
Critical habitat designations—
Gulf sturgeon, 51530–51532

Food and Drug Administration
NOTICES
Meetings:
Harmonisation International Conference—
Washington, DC; preparation, including common technical document implementation progress, 51589–51590

Foreign-Trade Zones Board
NOTICES
Applications, hearings, determinations, etc.:
Illinois
Archer Daniels Midland, Inc.; natural vitamin E manufacturing facilities, 51534
Louisiana
Bollinger Shipyards Lockport, LLC; shipbuilding, 51534–51535
Missouri
Kawasaki Motors Manfacturing Corp., U.S.A.; small, industrial diesel engines and industrial robot components manufacturing facility, 51535
North Carolina, 51535

Forest Service
NOTICES
Environmental statements; notice of intent:
Lolo National Forest, MT, 51533–51534
Meetings:
Resource Advisory Committees—
South Gifford Pinchot National Forest, 51534

Health and Human Services Department
See Centers for Disease Control and Prevention
See Community Services Office
See Food and Drug Administration
See Health Resources and Services Administration
See National Institutes of Health
NOTICES
Federal claims; interest rates on overdue debts, 51584

Health Resources and Services Administration
NOTICES
Meetings:
Rural Health National Advisory Committee, 51590

Housing and Urban Development Department
NOTICES
Agency information collection activities:
Proposed collection; comment request, 51596–51597

Interior Department
See Fish and Wildlife Service
See Land Management Bureau

Internal Revenue Service
NOTICES
Agency information collection activities:
Proposed collection; comment request, 51620–51621
Electronic tax return preparation and filing services for taxpayers; intent to enter an agreement with consortium of companies; comment request, 51621–51624

International Trade Administration
NOTICES
Antidumping:
Barium chloride from—
China, 51535–51536
Carbon and alloy steel wire rod from—
Ukraine, 51536
Saccharin from—
China, 51536–51539
Silicon metal from—
Brazil, 51539–51545
Applications, hearings, determinations, etc.:
Associated Universities, Inc., 51545–51546
University of—
Vermont, 51546

International Trade Commission
NOTICES
Import investigations:
Cold-rolled steel products from—
Various countries, 51598

Justice Department
See Justice Programs Office
NOTICES
Agency information collection activities:
Proposed collection; comment request, 51598–51599
Pollution control; consent judgments:
Lockheed Martin Corp. et al., 51599–51600
Quaker State Corp., 51599

Justice Programs Office
NOTICES
Agency information collection activities:
Submission for OMB review; comment request, 51600–51601

Labor Department
See Occupational Safety and Health Administration
NOTICES
Grants and cooperative agreements; availability, etc.:
Philippines and Pakistan; economic opportunity and income security expansion through workforce education, skills training, employment creation, etc.
Correction, 51601

Land Management Bureau
NOTICES
Survey plat filings:
Oregon/Washington, 51597–51598

National Foundation on the Arts and the Humanities
NOTICES
Agency information collection activities:
Proposed collection; comment request, 51601–51602

National Institute of Standards and Technology
NOTICES
Infrared spectral library; update; comment request, 51546
Inventions, Government-owned; availability for licensing, 51546–51547

National Institutes of Health
NOTICES
Meetings:
National Center for Complementary and Alternative Medicine, 51590–51591
National Center for Research Resources, 51591
National Eye Institute, 51591–51592
National Heart, Lung, and Blood Institute, 51592
National Human Genome Research Institute, 51592
National Institute of Arthritis and Musculoskeletal and Skin Diseases, 51594
National Institute of Mental Health, 51595
National Institute of Neurological Disorders and Stroke, 51593–51594
National Institute of Nursing Research, 51592–51593
National Institute on Alcohol Abuse and Alcoholism, 51594–51595
National Institute on Deafness and Other Communication Disorders, 51594
National Library of Medicine, 51595–51596
Scientific Review Center, 51596

National Oceanic and Atmospheric Administration
RULES
Fishery conservation and management:
Alaska; fisheries of Exclusive Economic Zone—
Pacific Ocean perch, 51499
Shallow-water species fishery by vessels using trawl gear in Gulf of Alaska, 51499–51500
PROPOSED RULES
Endangered and threatened species:
Critical habitat designations—
Gulf sturgeon, 51530–51532
NOTICES
Environmental statements; availability, etc.:
Puget Sound chinook populations harvest; resource management plan, 51547–51548

Nuclear Regulatory Commission
PROPOSED RULES
Federal Advisory Committee Act regulations, 51501–51507
NOTICES
Meetings:
Byproduct material, medical use; workshop, 51605
Applications, hearings, determinations, etc.:
Entergy Nuclear Indian Point 2, LLC, et al., 51602
Indiana Michigan Power Co., 51602–51605

Occupational Safety and Health Administration
PROPOSED RULES
Occupational safety and healthy standards:
2-methoxyethanol, 2-ethoxyethanol, and acetates (glycol ethers); occupational exposure, 51524–51525

Office of United States Trade Representative
See Trade Representative, Office of United States

Public Health Service
See Centers for Disease Control and Prevention
See Food and Drug Administration
See Health Resources and Services Administration
See National Institutes of Health

Research and Special Programs Administration
RULES
Hazardous materials:
Hazardous materials transportation—
DOT specification cylinders; maintenance, requalification, repair, and use requirements, 51625–51668

Securities and Exchange Commission
PROPOSED RULES
Securities:
Quarterly and annual reports; certification of disclosure
Supplemental information; comment request, 51508–51509
Regulation analyst certification, 51510–51516
NOTICES
Self-regulatory organizations; proposed rule changes:
American Stock Exchange LLC, 51609–51612
Chicago Stock Exchange, Inc., 51612–51614
New York Stock Exchange, Inc., 51614–51617
Applications, hearings, determinations, etc.:
Public utility holding company filings, 51606–51609

Small Business Administration
NOTICES
Disaster loan areas:
Colorado, 51618

Micronesia, 51618
Texas, 51618

Southeastern Power Administration
NOTICES
Power rates:
Georgia-Alabama-South Carolina rates, 51564–51578
Jim Woodruff Project, 51578–51580

State Department
NOTICES
Meetings:
Overseas Buildings Operations Industry Advisory Panel, 51618

Surface Transportation Board
NOTICES
Railroad operation, acquisition, construction, etc.:
Rutland Line, Inc., 51619–51620
Sidney & Lowe Railroad, 51620

Trade Representative, Office of United States
NOTICES
Tariff-rate quota amount determinations:
Raw cane sugar, refined sugar, and sugar-containing products, 51618–51619

Transportation Department
See Federal Aviation Administration
See Research and Special Programs Administration
See Surface Transportation Board
See Transportation Security Administration

Transportation Security Administration
RULES
Practice and procedure:
Investigative and enforcement procedures, 51480–51499

Treasury Department
See Customs Service
See Internal Revenue Service

Western Area Power Administration
NOTICES
Power rates:
Parker-Davis Project, 51580–51581

Separate Parts In This Issue

Part II
Transportation Department, Research and Special Programs Administration, 51625–51668

Part III
Children and Families Administration, Community Services Office, 51669–51696

Part IV
Agriculture Department, Agricultural Marketing Service, 51697–51715

Part V
Education Department, 51717–51741

Part VI
Education Department, 51743–51745

Part VII
Education Department, 51747–51750

Reader Aids
Consult the Reader Aids section at the end of this issue for phone numbers, online resources, finding aids, reminders, and notice of recently enacted public laws.
To subscribe to the Federal Register Table of Contents LISTSERV electronic mailing list, go to http://listserv.access.gpo.gov and select Online mailing list archives, FEDREGTOC-L, Join or leave the list (or change settings); then follow the instructions.

CFR PARTS AFFECTED IN THIS ISSUE

A cumulative list of the parts affected this month can be found in the Reader Aids section at the end of this issue.

7 CFR
301.....51459
930.....51700

10 CFR
Proposed Rules:
7.....51501

14 CFR
39.....51459

17 CFR
Proposed Rules:
232.....51508
240.....51508
242.....51510
249.....51508

18 CFR
Proposed Rules:
2.....51516

19 CFR
Proposed Rules:
4.....51519
113.....51519

29 CFR
Proposed Rules:
1910.....51524

34 CFR
Proposed Rules:
600.....51720
668.....51720
673.....51720
675.....51720
682.....51720
685.....51720
690.....51720
694.....51720

40 CFR
52.....51461
86.....51464
271.....51478
Proposed Rules:
51.....51525
52.....51527
122.....51527
300.....51528
450.....51527

49 CFR
107.....51626
171.....51626
172.....51626
173.....51626
177.....51626
178.....51626
179.....51626
180.....51626
1503.....51480

50 CFR
679 (2 documents) 51499
Proposed Rules:
17.....51530
226.....51530

Rules and Regulations

Federal Register

Vol. 67, No. 153

Thursday, August 8, 2002

This section of the FEDERAL REGISTER contains regulatory documents having general applicability and legal effect, most of which are keyed to and codified in the Code of Federal Regulations, which is published under 50 titles pursuant to 44 U.S.C. 1510.

The Code of Federal Regulations is sold by the Superintendent of Documents. Prices of new books are listed in the first FEDERAL REGISTER issue of each week.

DEPARTMENT OF AGRICULTURE

Animal and Plant Health Inspection Service

7 CFR Part 301

[Docket No. 02–018–2]

Citrus Canker; Removal of Quarantined Area

AGENCY: Animal and Plant Health Inspection Service, USDA.

ACTION: Affirmation of interim rule as final rule.

SUMMARY: We are adopting as a final rule, without change, an interim rule that amended the citrus canker regulations by removing a portion of Hillsborough County, FL, from the list of quarantined areas. The regulations require that an area be free from citrus canker for a period of at least 2 years before it may be removed from the list of quarantined areas. Surveys have shown that the quarantined area in Hillsborough County, FL, has been free of citrus canker since December 1999. The interim rule removed restrictions on the interstate movement of regulated articles from that portion of Hillsborough County, FL.

EFFECTIVE DATE: The interim rule became effective on March 21, 2002.

FOR FURTHER INFORMATION CONTACT: Mr. Stephen Poe, Operations Officer, Surveillance and Emergency Programs Planning and Coordination, PPQ, APHIS, 4700 River Road Unit 134, Riverdale, MD 20737–1231; (301) 734–8899.

SUPPLEMENTARY INFORMATION:

Background

In an interim rule effective and published in the **Federal Register** on March 21, 2002 (67 FR 13083–13084, Docket No. 02–018–1), we amended the citrus canker regulations in 7 CFR part 301 by removing a portion of Hillsborough County, FL, from the list of quarantined areas in § 301.75–4(a). The regulations require that an area be free from citrus canker for a period of at least 2 years before it may be removed from the list of quarantined areas, and surveys have shown that the quarantined area in Hillsborough County, FL, has been free of citrus canker since December 1999. Therefore, the interim rule removed restrictions on the interstate movement of regulated articles from that area.

Comments on the interim rule were required to be received on or before May 20, 2002. We did not receive any comments. Therefore, for the reason given in the interim rule, we are adopting the interim rule as a final rule.

This action also affirms the information contained in the interim rule concerning Executive Order 12866 and the Regulatory Flexibility Act, Executive Orders 12372 and 12988, and the Paperwork Reduction Act.

Further, for this action, the Office of Management and Budget has waived its review under Executive Order 12866.

List of Subjects in 7 CFR Part 301

Agricultural commodities, Plant diseases and pests, Quarantine, Reporting and recordkeeping requirements, and Transportation.

PART 301—DOMESTIC QUARANTINE NOTICES

Accordingly, we are adopting as a final rule, without change, the interim rule that amended 7 CFR 301 and that was published at 67 FR 13083–13084 on March 21, 2002.

Authority: 7 U.S.C. 166, 7711, 7712, 7714, 7731, 7735, 7751, 7752, 7753, and 7754; 7 CFR 2.22, 2.80, and 371.3.

Section 301.75–15 also issued under Sec. 204, Title II, Pub. L. 106–113, 113 Stat. 1501A–293; sections 301.75–15 and 301.75–16 also issued under Sec. 203, Title II, Pub. L. 106–224, 114 Stat. 400 (7 U.S.C. 1421 note).

Done in Washington, DC, this 2nd day of August 2002 .

Peter Fernandez,

Acting Administrator, Animal and Plant Health Inspection Service.

[FR Doc. 02–20069 Filed 8–7–02; 8:45 am]

BILLING CODE 3410–34–P

DEPARTMENT OF TRANSPORTATION

Federal Aviation Administration

14 CFR Part 39

[Docket No. 2002–NM–75–AD; Amendment 39–12686; AD 2002–06–09]

RIN 2120–AA64

Airworthiness Directives; Airbus Model A300; A300 B4–600, B4–600R, and F4–600R (Collectively Called A300–600); and A310 Series Airplanes

AGENCY: Federal Aviation Administration, DOT.

ACTION: Final rule; correction.

SUMMARY: This document corrects information in an existing airworthiness directive (AD) that applies to all Airbus Model A300; A300–600; and A310 series airplanes. That AD currently requires certain inspections of the airplane (including the vertical stabilizer, horizontal stabilizer, pylons, wing, and fuselage areas) following an in-flight incident resulting in extreme lateral loading. This document clarifies and corrects the information contact in the reporting requirement specified in paragraphs (b)(2) and (c)(2) of that AD. This correction is necessary to ensure that future reports are submitted to a specific point of contact.

DATES: Effective April 8, 2002.

FOR FURTHER INFORMATION CONTACT: Tim Backman, Aerospace Engineer, ANM–116, International Branch, FAA, Transport Airplane Directorate, 1601 Lind Avenue, SW., Renton, Washington 98055–4056; telephone (425) 227–2797; fax (425) 227–1149.

SUPPLEMENTARY INFORMATION: On March 15, 2002, the Federal Aviation Administration (FAA) issued AD 2002–06–09, amendment 39–12686 (67 FR 13259, March 22, 2002), which applies to all Airbus Model A300; A300–600; and A310 series airplanes. That AD requires certain inspections of the airplane (including the vertical stabilizer, horizontal stabilizer, pylons, wing, and fuselage areas) following an in-flight incident resulting in extreme lateral loading. The actions required by that AD are intended to detect and correct reduced structural integrity of the airplane following any future event.

Need for the Correction

Information obtained recently from Airbus Industrie indicates that a specific point of contact should be included for the reporting requirement submissions in that AD.

The FAA has determined that a correction to AD 2002–06–09 is necessary. The correction will replace the reference to AI/SE–D32 Technical Data and Documentation Services and the fax number for that office, as specified in paragraphs (b)(2) and (c)(2) of that AD, with the point of contact Jacques Leborgne and the fax number for that contact.

Correction of Publication

This document corrects the error and correctly adds the AD as an amendment to section 39.13 of the Federal Aviation Regulations (14 CFR 39.13).

The AD is reprinted in its entirety for the convenience of affected operators. The effective date of the AD remains April 8, 2002.

Since this action only adds a point of contact, it has no adverse economic impact and imposes no additional burden on any person. Therefore, the FAA has determined that notice and public procedures are unnecessary.

List of Subjects in 14 CFR Part 39

Air transportation, Aircraft, Aviation safety, Safety.

Adoption of the Correction

Accordingly, pursuant to the authority delegated to me by the Administrator, the Federal Aviation Administration amends part 39 of the Federal Aviation Regulations (14 CFR part 39) as follows:

PART 39—AIRWORTHINESS DIRECTIVES

1. The authority citation for part 39 continues to read as follows:

Authority: 49 U.S.C. 106(g), 40113, 44701.

§ 39.13 [Corrected]

2. Section 39.13 is amended by correctly adding the following airworthiness directive (AD):

2002–06–09 Airbus Industrie: Amendment 39–12686. Docket 2002–NM–75–AD.

Applicability: All Model A300; A300 B4–600, B4–600R, and F4–600R (collectively called A300–600); and A310 series airplanes; certificated in any category.

Note 1: This AD applies to each airplane identified in the preceding applicability provision, regardless of whether it has been modified, altered, or repaired in the area subject to the requirements of this AD. For airplanes that have been modified, altered, or repaired so that the performance of the requirements of this AD is affected, the owner/operator must request approval for an alternative method of compliance in accordance with paragraph (f) of this AD. The request should include an assessment of the effect of the modification, alteration, or repair on the unsafe condition addressed by this AD; and, if the unsafe condition has not been eliminated, the request should include specific proposed actions to address it.

Compliance: Required as indicated, unless accomplished previously.

To detect and correct reduced structural integrity of the airplane following an extreme lateral loading event, accomplish the following:

Lateral Load Factor Determination

(a) As of the effective date of this AD, before further flight following an in-flight incident that results in extreme lateral loading, determine whether the lateral load factor (Ny) equaled or exceeded 0.3g. Extreme lateral loading can occur as a consequence of severe turbulence, loss of control of the aircraft involving yaw and/or roll maneuvers, hazardous systems failures, or other rare flight conditions. Then do the inspections specified in paragraph (b) or (c) of this AD, as applicable, at the time specified.

Note 2: Acceptable methods for determining if the lateral load factor equaled or exceeded 0.3g include but are not limited to: Aircraft Communication Addressing and Reporting System (ACARS), Digital Flight Data Recorder (DFDR) readout, or Quick Access Recorder (QAR). A pilot report of extreme lateral acceleration in-flight can be used to assess whether one of the previous methods should be used to determine the lateral load factor.

Note 3: The inspections specified in paragraphs (b) and (c) of this AD are not necessary if lateral load factors exceed 0.3g when the airplane is on the ground (landing, taxiing).

Inspections for Certain Lateral Load Factors

(b) For airplanes on which the lateral load factor (Ny) is greater than or equal to 0.3g, but less than 0.35g, accomplish the following actions:

(1) Before further flight, do the detailed inspections specified in paragraph (d) of this AD.

Reporting Requirement

(2) Within 5 days after accomplishing the inspections required by paragraph (b)(1) of this AD: Submit a report to Airbus, including the DFDR recording (or equivalent) of the portion of the flight when the extreme lateral loading event occurred, and other relevant information necessary to fully describe the event and develop the actual loads, including but not limited to, airplane weight, weather, and flight crew report. Submit a report of the inspection results (both positive and negative findings) to Jacques Leborgne, Airbus Industrie Customer Services Directorate, 1 Rond Point Maurice Bellonte, 31707 Blagnac Cedex France; fax (+33) 5 61 93 36 14. Information collection requirements contained in this regulation have been approved by the Office of Management and Budget (OMB) under the provisions of the Paperwork Reduction Act of 1980 (44 U.S.C. 3501 *et seq.*) and have been assigned OMB Control Number 2120–0056.

Note 4: Following accomplishment of the requirements of paragraphs (b)(1), (b)(2) and, if necessary, (e) of this AD, the airplane may be returned to service before accomplishing the inspections required by paragraph (b)(3) of this AD.

Supplementary Inspections

(3) The manufacturer will develop an airplane loads assessment and recommend, if necessary, supplementary inspections of the applicable areas of the airplane (including the vertical stabilizer, horizontal stabilizer pylons, wing, and fuselage areas). Within 30 days after the extreme lateral loading event, do the supplementary inspections of the airplane according to a method approved by the Manager, International Branch, ANM–116, FAA, Transport Airplane Directorate.

Note 5: The loads assessment, and if necessary, supplementary inspections required by paragraph (b)(3) of this AD, will be developed and proposed by the manufacturer based on the manufacturer's analysis of the report required by paragraph (b)(2) of this AD.

Inspections for Certain Other Lateral Load Factors

(c) For airplanes on which the lateral load factor (Ny) is greater than or equal to 0.35g, accomplish the following:

(1) Before further flight, do the detailed inspections specified in paragraph (d) of this AD.

Reporting Requirement

(2) Before further flight after accomplishing the inspections required by paragraph (c)(1) of this AD: Submit a report to Airbus, including the DFDR recording (or equivalent) of the portion of the flight when the extreme lateral loading event occurred, and other relevant information necessary to fully describe the event and develop the actual loads, including but not limited to, airplane weight, weather, and flight crew report. Submit a report of the inspection results (both positive and negative findings) to Jacques Leborgne, Airbus Industrie Customer Services Directorate, 1 Rond Point Maurice Bellonte, 31707 Blagnac Cedex France; fax (+33) 5 61 93 36 14. Information collection requirements contained in this regulation have been approved by the Office of Management and Budget (OMB) under the provisions of the Paperwork Reduction Act of 1980 (44 U.S.C. 3501 *et seq.*) and have been assigned OMB Control Number 2120–0056.

Supplementary Inspections

(3) The manufacturer will develop an airplane loads assessment and recommend, if necessary, supplementary inspections of the applicable areas of the airplane (including the vertical stabilizer, horizontal stabilizer pylons, wing, and fuselage areas). Before further flight, do the supplementary inspections of the airplane according to a method approved by the Manager,

International Branch, ANM–116, FAA, Transport Airplane Directorate.

Note 6: The loads assessment, and if necessary, supplementary inspections required by paragraph (c)(3) of this AD, will be developed and proposed by the manufacturer based on the manufacturer's analysis of the report required by paragraph (c)(2) of this AD.

Detailed Inspections

(d) Do the following detailed inspections at the time specified in paragraph (b)(1) or (c)(1) of this AD, as applicable.

(1) Do the inspections as specified in and per Chapter 05–51–17 (Inspections After Flight in Excessive Turbulence or In Excess of VMO/MMO) of Airbus A300, A300–600 or A310 Airplane Maintenance Manual (AMM), as applicable. Extend the areas for these inspections as specified in paragraphs (d)(1)(i) and (d)(1)(ii) of this AD.

(i) Extend the wing inspection area to include rib 22 through rib 29.

(ii) Extend the fuselage inspection area from the inside to include frame 84 through 87 above stringer 23, and all areas of frame 91.

(2) Do detailed inspections to find damage of the areas specified in paragraphs (d)(2)(i), (d)(2)(ii), and (d)(2)(iii) of this AD, according to a method approved by the Manager, International Branch, ANM–116.

(i) Inspect the fuselage external surface under the vertical stabilizer to fuselage fairing, including side load fittings and lower surface of rib 1 of the vertical stabilizer.

(ii) Inspect the rudder hinge arms and support fittings 1 through 7, and the actuator support fittings of the vertical stabilizer.

(iii) Inspect the rudder hinge fittings 1 through 7, and the actuator support fittings of the vertical stabilizer.

Note 7: For the purposes of this AD, a detailed inspection is defined as: ''An intensive visual examination of a specific structural area, system, installation, or assembly to detect damage, failure, or irregularity. Available lighting is normally supplemented with a direct source of good lighting at intensity deemed appropriate by the inspector. Inspection aids such as mirror, magnifying lenses, *etc.*, may be used. Surface cleaning and elaborate access procedures may be required.''

Corrective Actions

(e) If any damage is found during any inspection required by this AD: Before further flight, repair according to the method specified in the Airbus structural repair manual or according to a method approved by the Manager, International Branch, ANM–116, or by the Direction Générale de l'Aviation Civile or its delegated agent.

Alternative Methods of Compliance

(f) An alternative method of compliance or adjustment of the compliance time that provides an acceptable level of safety may be used if approved by the Manager, International Branch, ANM–116. Operators shall submit their requests through an appropriate FAA Principal Maintenance Inspector, which may add comments and then send it to the Manager, International Branch, ANM–116.

Note 8: Information concerning the existence of approved alternative methods of compliance with this AD, if any, may be obtained from the International Branch, ANM–116.

Special Flight Permits

(g) Special flight permits may be issued in accordance with §§ 21.197 and 21.199 of the Federal Aviation Regulations (14 CFR 21.197 and 21.199) to operate the airplane to a location where the requirements of this AD can be accomplished.

Effective Date

(h) The effective date of this amendment remains April 8, 2002.

Issued in Renton, Washington, on July 29, 2002.

Vi Lipski,

Manager, Transport Airplane Directorate, Aircraft Certification Service.

[FR Doc. 02–20019 Filed 8–7–02; 8:45 am]

BILLING CODE 4910–13–P

ENVIRONMENTAL PROTECTION AGENCY

40 CFR Part 52

[NC–96; 97–200231(a); FRL–7254–2]

Approval and Promulgation of Implementation Plans: North Carolina: Permitting Rules and Other Miscellaneous Revisions

AGENCY: Environmental Protection Agency (EPA).

ACTION: Direct final rule.

SUMMARY: EPA is approving a State Implementation Plan (SIP) revision submitted by the State of North Carolina, through the North Carolina Department of Environmental and Natural Resources (NCDENR), on April 16, 2001. These revisions include the adoption of rules 15A NCAC 2D .0611 through .0615, the amending of .0501, .0903 and multiple rules within Chapter .0600 Monitoring: Recordkeeping: Reporting, the adoption of rules 15A NCAC 2Q .0316 and .0317 and the amending of rules .0109, .0803 and .0805 through .0808. The purpose of these revisions is to make the revised regulations consistent with the requirements of the Clean Air Act as amended in 1990 (CAA).

DATES: This direct final rule is effective October 7, 2002, without further notice, unless EPA receives adverse comment by September 9, 2002. If adverse comment is received, EPA will publish a timely withdrawal of the direct final rule in the **Federal Register** and inform the public that the rule will not take effect.

ADDRESSES: All comments should be addressed to: Randy Terry at the EPA, Region 4 Air Planning Branch, 61 Forsyth Street, SW., Atlanta, Georgia 30303–8960.

Copies of the State submittal(s) are available at the following addresses for inspection during normal business hours:

Environmental Protection Agency, Region 4, Air Planning Branch, 61 Forsyth Street, SW., Atlanta, Georgia 30303–8960. Randy Terry, 404/562–9032.

North Carolina Department of Environment and Natural Resources, 512 North Salisbury Street, Raleigh, North Carolina 27604.

Forsyth County Environmental Affairs Department, 537 North Spruce Street, Winston-Salem, North Carolina 27101.

FOR FURTHER INFORMATION CONTACT: Randy B. Terry at 404/562–9032, or by electronic mail at *terry.randy@epa.gov*.

SUPPLEMENTARY INFORMATION:

I. Background

On April 16, the State of North Carolina, through the North Carolina Department of Environmental and Natural Resources (NCDENR), submitted revisions to the North Carolina SIP. These revisions include the adoption of rules 15A NCAC 2D .0611 through .0615, the amending of .0501, .0903 and multiple rules within Chapter .0600 Monitoring: Recordkeeping: Reporting, the adoption of rules 15A NCAC 2Q .0316 and .0317 and the amending of rules .0109, .0803 and .0805 through .0808. A detailed analysis of each of the major revisions submitted is listed below.

II. Analysis of North Carolina's Submittal

Subchapter 2D

2D .0501 Compliance With Emission Control Standards

This rule was amended to add detailed language to the cited ASTM methods and to eliminate the duplicative processing for the facilities with mixed control required to be permitted according to the requirements of title V of the CAA. Previously these facilities with mixed control were subject to the SIP process and the title V permitting process. Both processes involve the same amount of public participation. Both involve EPA review and approval. Under their previous process, there were two public comment periods and two EPA reviews for title V

facilities with mixed control that decided to choose emission trading to meet the NO_X SIP call requirements. These amendments simplify and streamline the emission trading process for title V facilities by requiring only one public hearing for both title V and SIP processes.

2D .0600 Monitoring: Recordkeeping: Reporting

This subchapter was amended for the following purposes:

(1) To resolve deficiencies that EPA has identified in the SIP.

(2) To write the requirements of 40 CFR part 51, appendix P in a more concise, precise, and readable form.

(3) To require that data collected for the purposes of showing compliance be quality assured data,

(4) To add rule to implement EPA's compliance assurance monitoring (CAM) requirements.

(5) To clearly delegate to the Director the authority to place monitoring, recordkeeping, and reporting requirements in permits of non-title V facilities.

2D .0903 Recordkeeping: Reporting: Monitoring

This rule was amended to delete specific recordkeeping and reporting requirements and add a reference to monitoring requirements in section 15A NCAC 2D .0600.

Subchapter 2Q

2Q .0109 Compliance Schedule for Previously Exempted Activities

This rule was amended to delete obsolete schedules for submitting permit applications for activities that have lost their permit exemptions.

2Q .0316 Administrative Permit Amendments

This rule was adopted to describe the administrative amendment process and define the types of changes that are administrative amendments.

2Q .0317 Avoidance Conditions

This rule was adopted to clarify that conditions can be placed in permits to avoid applicability of more restrictive rules. It gives the permittee a chance to choose a less expensive cost of operations by avoiding the applicability of certain rules.

2Q .0800 Exclusionary rules

This Subchapter was amended to require annual reports to be submitted by March 1, 2000, and to the regional supervisors of the appropriate Division regional office instead of the Director. These changes make tracking the report submittals easier.

III. Final Action

EPA is approving the aforementioned changes to the SIP because the revisions are consistent with Clean Air Act and EPA regulatory requirements. The EPA is publishing this rule without prior proposal because the Agency views this as a noncontroversial submittal and anticipates no adverse comments. However, in the proposed rules section of this **Federal Register** publication, EPA is publishing a separate document that will serve as the proposal to approve the SIP revision should adverse comments be filed. This rule will be effective October 7, 2002, without further notice unless the Agency receives adverse comments by September 9, 2002.

If the EPA receives such comments, then EPA will publish a document withdrawing the final rule and informing the public that the rule will not take effect. All public comments received will then be addressed in a subsequent final rule based on the proposed rule. The EPA will not institute a second comment period. Parties interested in commenting should do so at this time. If no such comments are received, the public is advised that this rule will be effective on October 7, 2002, and no further action will be taken on the proposed rule. Please note that if we receive adverse comment on an amendment, paragraph, or section of this rule and if that provision may be severed from the remainder of the rule, we may adopt as final those provisions of the rule that are not the subject of an adverse comment.

IV. Administrative Requirements

Under Executive Order 12866 (58 FR 51735, October 4, 1993), this action is not a ''significant regulatory action'' and therefore is not subject to review by the Office of Management and Budget. For this reason, this action is also not subject to Executive Order 13211, ''Actions Concerning Regulations That Significantly Affect Energy Supply, Distribution, or Use'' (66 FR 28355, May 22, 2001). This action merely approves state law as meeting Federal requirements and imposes no additional requirements beyond those imposed by state law. Accordingly, the Administrator certifies that this rule will not have a significant economic impact on a substantial number of small entities under the Regulatory Flexibility Act (5 U.S.C. 601 *et seq.*). Because this rule approves pre-existing requirements under state law and does not impose any additional enforceable duty beyond that required by state law, it does not contain any unfunded mandate or significantly or uniquely affect small governments, as described in the Unfunded Mandates Reform Act of 1995 (Pub. L. 104–4).

This rule also does not have tribal implications because it will not have a substantial direct effect on one or more Indian tribes, on the relationship between the Federal Government and Indian tribes, or on the distribution of power and responsibilities between the Federal Government and Indian tribes, as specified by Executive Order 13175 (65 FR 67249, November 9, 2000). This action also does not have Federalism implications because it does not have substantial direct effects on the States, on the relationship between the national government and the States, or on the distribution of power and responsibilities among the various levels of government, as specified in Executive Order 13132 (64 FR 43255, August 10, 1999). This action merely approves a state rule implementing a Federal standard, and does not alter the relationship or the distribution of power and responsibilities established in the Clean Air Act. This rule also is not subject to Executive Order 13045 ''Protection of Children from Environmental Health Risks and Safety Risks'' (62 FR 19885, April 23, 1997), because it is not economically significant.

In reviewing SIP submissions, EPA's role is to approve state choices, provided that they meet the criteria of the Clean Air Act. In this context, in the absence of a prior existing requirement for the State to use voluntary consensus standards (VCS), EPA has no authority to disapprove a SIP submission for failure to use VCS. It would thus be inconsistent with applicable law for EPA, when it reviews a SIP submission, to use VCS in place of a SIP submission that otherwise satisfies the provisions of the Clean Air Act. Thus, the requirements of section 12(d) of the National Technology Transfer and Advancement Act of 1995 (15 U.S.C. 272 note) do not apply. This rule does not impose an information collection burden under the provisions of the Paperwork Reduction Act of 1995 (44 U.S.C. 3501 *et seq.*).

The Congressional Review Act, 5 U.S.C. 801 *et seq.*, as added by the Small Business Regulatory Enforcement Fairness Act of 1996, generally provides that before a rule may take effect, the agency promulgating the rule must submit a rule report, which includes a copy of the rule, to each House of the Congress and to the Comptroller General of the United States. EPA will submit a

report containing this rule and other required information to the U.S. Senate, the U.S. House of Representatives, and the Comptroller General of the United States prior to publication of the rule in the **Federal Register**. A major rule cannot take effect until 60 days after it is published in the **Federal Register**. This action is not a ''major rule'' as defined by 5 U.S.C. 804(2).

Under section 307(b)(1) of the Clean Air Act, petitions for judicial review of this action must be filed in the United States Court of Appeals for the appropriate circuit by October 7, 2002. Filing a petition for reconsideration by the Administrator of this final rule does not affect the finality of this rule for the purposes of judicial review nor does it extend the time within which a petition for judicial review may be filed, and shall not postpone the effectiveness of such rule or action. This action may not be challenged later in proceedings to enforce its requirements. (*See* section 307(b)(2).)

List of Subjects in 40 CFR Part 52

Environmental protection, Air pollution control, Carbon monoxide, Intergovernmental relations, Lead, Nitrogen dioxide, Ozone, Particulate matter, Reporting and recordkeeping requirements, Sulfur oxides, Volatile organic compounds.

Dated: July 10, 2002.

A. Stanley Meiburg,

Acting Regional Administrator, Region 4.

PART 52—[AMENDED]

1. The authority for citation for part 52 continues to read as follows:

Authority: 42 U.S.C. 7401 *et seq.*

Subpart II—North Carolina

2. In the table in § 52.1770(c), the table is designated as Table 1 and amended as follows:

b. Under subchapter 2D by revising entries: .0501, .0601, .0602, .0604, .0605, .0607, .0610, and .0903;

c. Under subchapter 2D by adding in numerical order a new entry for .0611, .0612, .0613, .0614, and .0615.

d. Under subchapter 2Q by revising entries .0109, .0803, .0805, .0806, and .0807.

d. Under subchapter 2Q by adding in numerical order a new entry for .0316, .0317 and .0808.

§ 52.1770 Identification of plan.

* * * * *

(c) * * *

TABLE 1.—EPA APPROVED NORTH CAROLINA REGULATIONS

State citation	Title/subject	State effective date	EPA approval date	Comments
	Subchapter 2D Air Pollution Control Requirements			
*	*	*	*	*
	Section .0500 Emission Control Standards			
Sect. .0501	Compliance With Emission Control Standards	04/01/01	August 8, 2002.	
*	*	*	*	*
	Section .0600 Air Contaminants; Monitoring, Reporting			
Sect. .0601	Monitoring: Recordkeeping: Reporting	04/01/99	August 8, 2002.	
Sect. .0602	Definitions	04/01/99	August 8, 2002.	
Sect. .0604	Exceptions to Monitoring and Reporting Requirements	04/01/99	August 8, 2002.	
Sect. .0605	General Recordkeeping and Reporting Requirements	04/01/99	August 8, 2002.	
*	*	*	*	*
Sect. .0607	Large Wood and Wood-Fossil Fuel Combination Units	04/01/99	August 8, 2002.	
*	*	*	*	*
Sect. .0610	Federal Monitoring Requirements	04/01/99	August 8, 2002.	
Sect. .0611	Monitoring Emissions From Other Sources	04/01/99	August 8, 2002.	
Sect. .0612	Alternative Monitoring and Reporting Procedures	04/01/99	August 8, 2002.	
Sect. .0613	Quality Assurance Program	04/01/99	August 8, 2002.	
Sect. .0614	Compliance Assurance Monitoring	04/01/99	August 8, 2002.	
Sect. .0615	Delegation	04/01/99	August 8, 2002.	
*	*	*	*	*
	Section .0900 Volatile Organic Compounds			
*	*	*	*	*
Sect. .0903	Recordkeeping: Reporting: Monitoring	04/01/99	August 8, 2002.	
*	*	*	*	*
	Subchapter 2Q Air Quality Permits Section .0100 General Provisions			
*	*	*	*	*
Sect. .0109	Compliance Schedule for Previously Exempted Activities	04/01/01	August 8, 2002.	
*	*	*	*	*
	Section .0300 Construction and Operating Permits			
*	*	*	*	*
Sect. .0316	Administrative Permit Amendments	04/01/01	August 8, 2002.	
Sect. .0317	Avoidance Conditions	04/01/01	August 8, 2002.	

TABLE 1.—EPA APPROVED NORTH CAROLINA REGULATIONS—Continued

State citation	Title/subject	State effective date	EPA approval date	Comments
*	* * *	*	*	*
	Section .0800 Exclusionary Rules			
Sect. .0803	Coating, Solvent Cleaning, Graphic Arts Design	04/01/01	August 8, 2002.	
*	* * *	*	*	*
Sect. .0805	Grain Elevators	04/01/01	August 8, 2002.	
Sect. .0806	Cotton Gins	04/01/01	August 8, 2002.	
Sect. .0807	Emergency Generators	04/01/01	August 8, 2002.	
Sect. .0808	Peak Shaving Generators	04/01/01	August 8, 2002.	

* * * * *

[FR Doc. 02–19435 Filed 8–7–02; 8:45 am]

BILLING CODE 6560–50–P

ENVIRONMENTAL PROTECTION AGENCY

40 CFR Part 86

[AMS–FRL–7256–5]

RIN 2060–AJ73

Control of Air Pollution From New Motor Vehicles and New Motor Vehicle Engines; Non-Conformance Penalties for 2004 and later Model Year Emission Standards for Heavy-Duty Diesel Engines and Heavy-Duty Diesel Vehicles

AGENCY: Environmental Protection Agency (EPA).

ACTION: Final rule.

SUMMARY: EPA is finalizing nonconformance penalties (NCPs) for the 2004 and later model year non-methane hydrocarbons and nitrogen oxides (NMHC+NO_X) standard for heavy-duty diesel engines and vehicles. In general, the availability of NCPs allows a manufacturer of heavy-duty engines (HDEs) whose engines fail to conform with the applicable 2004 model year emission standards, but do not exceed a designated upper limit, to be issued a certificate of conformity upon payment of a monetary penalty. This final rule establishes the upper limit associated with the 2004 emission standard for NMHC+NO_X as 4.5 grams per brake-horsepower-hour for light and medium heavy-duty engines and urban buses, and 6.0 grams per brake-horsepower-hour for heavy heavy-duty engines. Based on these upper limits, this rule also establishes the cost inputs used in the general NCP formula currently in the regulations.

DATES: This rule is effective on August 8, 2002.

ADDRESSES: Comments: All comments and materials relevant to today's action have been placed in Public Docket No. A–2001–25 at the following address: U.S. Environmental Protection Agency (EPA), Air Docket (6102), Room M–1500, 401 M Street, SW., Washington, DC 20460 (on the ground floor in Waterside Mall) from 8:00 a.m. to 5:30 p.m., Monday through Friday, except on government holidays. You can reach the Air Docket by telephone at (202) 260–7548 and by facsimile at (202) 260–4400. We may charge a reasonable fee for copying docket materials, as provided in 40 CFR part 2.

FOR FURTHER INFORMATION CONTACT: Margaret Borushko, U.S. EPA, National Vehicle and Fuels Emission Laboratory, 2000 Traverwood, Ann Arbor, MI 48105; Telephone (734) 214–4334; Fax: (734) 214–4816; E-mail: *borushko.margaret@epa.gov.*

SUPPLEMENTARY INFORMATION:

Regulated Entities

This action may affect you if you produce or import new heavy-duty diesel engines which are intended for use in highway vehicles such as trucks and buses or other types of heavy-duty highway vehicles. The table below gives some examples of entities that may have to follow the regulations. But because these are only examples, you should carefully examine the regulations in 40 CFR part 86. If you have questions, call the person listed in the **FOR FURTHER INFORMATION CONTACT** section above.

Category	NAICS [a] Codes	SIC Codes [b]	Examples of potentially regulated entities
Industry	336112 336120	3711	Engine and truck manufacturers.

[a] North American Industry Classification System (NAICS).
[b] Standard Industrial Classification (SIC) system code.

Access to Rulemaking Documents Through the Internet

This final rule is available electronically on the day of publication from the Environmental Protection Agency Internet Web site listed below. Electronic copies of the preamble, regulatory language, Technical Support Document, and other documents associated with today's final rule are available from the EPA Office of Transportation and Air Quality (formerly the Office of Mobile Sources) Web site listed below shortly after the rule is signed by the Administrator. This service is free of charge, except any cost that you incur for connecting to the Internet.

Environmental Protection Agency Web Site: *http://www.epa.gov/fedrgstr/*

(Either select a desired date or use the Search feature.)

Office of Transportation and Air Quality (OTAQ) Web Site: *http://www.epa.gov/otaq/*

(Look in ''Recent Additions'' or under the ''Heavy Trucks/Buses'' topic.)

Please note that due to differences between the software used to develop the document and the software into which document may be downloaded, changes in format, page length, etc. may occur.

Table of Contents

I. Background and Statutory Authority
A. Background to Nonconformance Penalty Rules
B. Statutory Authority

C. Heavy-duty Diesel Consent Decrees
II. Nonconformance Penalties for 2004 and Later Heavy-Duty Engines and Heavy-Duty Vehicles
A. Finding of Eligibility for NCPs
B. Penalty Rates
III. Significant Issues Raised in this Rulemaking
A. Relation of NCP Costs to Rulemaking Costs
B. Discount Rate
C. Upper Limit
D. Use of Penalty Funds
E. Incorporating Factors Not Provided For In The NCP Regulations
F. Fuel Cost
IV. Economic Impact
V. Environmental Impact
VII. Administrative Requirements
A. Regulatory Planning and Review: Executive Order 12866
B. Regulatory Flexibility Analysis
C. Compliance with the Paperwork Reduction Act
D. Unfunded Mandates Reform Act
E. Executive Order 13175: Consultation and Coordination with Indian Tribal Governments
F. National Technology Transfer and Advancement Act
G. Executive Order 13045: Children's Health Protection
H. Executive Order 13132: Federalism
I. Executive Order 13211:Energy Effects
J. Congressional Review Act

I. Background and Statutory Authority

A. Background to Nonconformance Penalty Rules

Since the promulgation of the first NCP rule in 1985, NCP rules have generally been described as continuing ''phases'' of the NCP program. The first NCP rule (Phase I), sometimes referred to as the ''generic'' NCP rule, established three basic criteria for determining the eligibility of emission standards for nonconformance penalties in any given model year (50 FR 35374, August 30, 1985). For regulatory language, see 40 CFR 86.1103–87. First, the emission standard in question must become more difficult to meet. This can occur in two ways, either by the emission standard itself becoming more stringent, or due to its interaction with another emission standard that has become more stringent. Second, substantial work must be required in order to meet the emission standard. EPA considers ''substantial work'' to mean the application of technology not previously used in that vehicle or engine class/subclass, or a significant modification of existing technology, in order to bring that vehicle/engine into compliance. EPA does not consider minor modifications or calibration changes to be classified as substantial work. Third, a technological laggard must be likely to develop. Prior NCP rules have considered a technological laggard to be a manufacturer who cannot meet a particular emission standard due to technological (not economic) difficulties and who, in the absence of NCPs, might be forced from the marketplace, including the elimination of one or more engine families/configurations from production. EPA will make the determination that a technological laggard is likely to develop, based in large part on the first two criteria. However, these criteria are not always sufficient to determine the likelihood of the development of a technological laggard. An emission standard may become more difficult to meet and substantial work may be required for compliance, but if that work merely involves transfer of well-developed technology from another vehicle class, it is unlikely that a technological laggard would develop.

The criteria and methodologies established in the 1985 rule have since been used to determine eligibility and to establish NCPs for a number of heavy-duty emission standards. Phases II, III, IV, and V, published in the period from 1985 to 1996, established NCPs that, in combination, cover the full range of heavy-duty—from heavy light-duty trucks (6,000–8,500 pounds gross vehicle weight) to the largest diesel truck and urban bus engines. NCPs have been established for engine emission standards for hydrocarbons (HC), carbon monoxide (CO), nitrogen oxides (NO_X), and particulate matter (PM). The most recent NCP rule (61 FR 6949, February 23, 1996) established NCPs for the 1998 and later model year NO_X standard for heavy-duty diesel engines (HDDEs), the 1996 and later model year for Light-Duty Truck 3 (LDT3) NO_X standard, and the 1996 and later urban bus PM standard. A concurrent but separate final rule (61 FR 6944, February 23, 1996) established NCPs for the 1996 LDT3 PM standard. The NCP rulemaking phases are summarized in greater detail in the Final Technical Support Document for this rule.

B. Statutory Authority

Section 206(g) of the Clean Air Act (the Act), 42 U.S.C. 7525(g), requires EPA to issue a certificate of conformity for HDEs or HDVs which exceed a federal emissions standard, but do not exceed an upper limit associated with that standard, if the manufacturer pays an NCP established by rulemaking. Congress adopted section 206(g) in the Clean Air Act Amendments of 1977 as a response to perceived problems with technology-forcing heavy-duty emissions standards. Following *International Harvester* v. *Ruckelshaus*, 478 F.2d 615 (D.C. Cir. 1973), Congress realized the dilemma that technology-forcing standards might cause for motor vehicle manufacturers. If strict standards were maintained, then some manufacturers, ''technological laggards,'' might be unable to comply initially and would be forced out of the marketplace. NCPs were intended to remedy this potential problem. The NCP would provide a temporary alternative that would permit manufacturers to sell their engines or vehicles by payment of a penalty. At the same time, conforming manufacturers would not suffer an economic disadvantage compared to nonconforming manufacturers, because the NCP would be based, in part, on money saved by the technological laggard and its customer from the nonconforming engine or vehicle.

Under section 206(g)(1), NCPs may be offered for HDVs or HDEs. The penalty may vary by pollutant and by class or category of vehicle or engine. HDVs are defined in section 202(b)(3)(C) of the CAA as vehicles in excess of 6,000 pounds gross vehicle weight rating (GVWR). The light-duty truck (LDT) classification includes trucks that have a GVWR of 8500 lbs or less. Therefore, certain LDTs may be classified as HDVs. Historically, LDTs up through 6000 lbs GVWR have been considered ''light light-duty trucks'' (LLDTs) and LDTs between 6,001 and 8,500 pounds GVWR have been considered ''heavy light-duty trucks'' (HLDTs). Based on various new requirements established by the Clean Air Act Amendments of 1990, each of these two light truck categories has been further subdivided into groups by weight. The LLDTs are classified by weight based on ''loaded vehicle weight,'' or LVW, which maintains its current definition: curb weight plus 300 lbs. The trucks up through 3750 lbs LVW make up a subclass called light-duty-trucks-1, or LDT1. Those greater than 3750 lbs LVW but less than or equal to 6000 lbs GVWR are the subclass light-duty-trucks-2, or LDT2. The HLDTs are divided at 5750 lbs ''adjusted loaded vehicle weight,'' or ALVW. Adjusted loaded vehicle weight is the average of the curb weight and the GVWR. The HLDTs that are up through 5750 lbs ALVW are called light-duty trucks-3, or LDT3. Those above 5750 lbs ALVW but less than or equal to 8500 lbs GVWR are light-duty-trucks-4, or LDT4. The LDT3 and LDT4 subclasses make up the HLDT vehicle class. Since NCPs can only be established for heavy duty vehicles or engines, emission standards for light-duty trucks of the LDT3 and LDT4 categories are the only light-duty truck categories eligible for NCPs.

Section 206(g)(3) requires that NCPs:

- Account for the degree of emission nonconformity;
- Increase periodically to provide incentive for nonconforming manufacturers to achieve the emission standards; and
- Remove the competitive disadvantage to conforming manufacturers.

Section 206(g) authorizes EPA to require testing of production vehicles or engines in order to determine the emission level on which the penalty is based. If the emission level of a vehicle or engine exceeds an upper limit of nonconformity established by EPA through regulation, the vehicle or engine would not qualify for an NCP under section 206(g) and no certificate of conformity could be issued to the manufacturer. If the emission level is below the upper limit but above the standard, that emission level becomes the ''compliance level,'' the level to which the engine must conform. This is also the benchmark for warranty and recall liability. The manufacturer who elects to pay the NCP is liable for vehicles or engines that exceed the compliance level in-use, unless, for the case of HLDTs, the compliance level is below the in-use standard. The manufacturer does not have in-use warranty or recall liability for emissions levels above the standard but below the compliance level.

Section 307(d) of the CAA applies to today's rule as provided by Section 307(d)(1)(v), 42 U.S.C. 7607(d)(1)(v).

C. Heavy-Duty Diesel Consent Decrees

On October 22, 1998, the Department of Justice and the Environmental Protection Agency announced settlements with seven major manufacturers whose diesel engines comprise a majority of the diesel engine market. The settlements resolved claims that the manufacturers installed computer software on heavy duty diesel engines that turned off the engine emission control system during highway driving in violation of the CAA's prohibition on defeat devices (42 USC 7522(a)(3)). The settlements were entered by the U.S. District Court for the District of Columbia on July 1, 1999. These consent decrees with the U.S. Government contained a number of provisions applying to heavy-duty on-road, and in some cases, nonroad, engines. Specific to the on-road engines, the decrees permit the continued use of non-complying engines for a period of time (although emissions are capped by limits associated with new supplemental test procedures). Other elements of these consent decrees include a program under which the consent decree manufacturers are required to invest considerable resources to evaluate instrumentation and methodologies for on-road testing. Because the Consent Decrees refer to NCPs for the 2004 model year, if established, promulgation of this rule would have an impact on the penalties determined under the Consent Decrees.

II. Nonconformance Penalties for 2004 and Later Heavy-Duty Engines and Heavy-Duty Vehicles

A. Finding of Eligibility for NCPs

In the Notice of Proposed Rulemaking (NPRM) (67 FR 2159, January 16, 2002), we identified the heavy-duty diesel NMHC+NO_X standard becoming effective in model year 2004, the heavy-duty gasoline standards generally taking effect in the 2005 model year, and the Tier 2 standards for Medium-duty Passenger Vehicles & Heavy Light-duty Trucks taking effect in 2004 as new standards for which we have statutory authority for considering NCPs. We then applied the three generic NCP criteria (discussed in section I.A) to each of those emission standards, and identified the 2004 heavy-duty diesel NMHC+NO_X standard of 2.4 g/bhp-hr as satisfying the required NCP criteria and, therefore, proposed to make NCPs available for heavy-duty engines subject to that standard. We also proposed upper limits for that standard and numerical values to be used in the calculation of the NCP for the associated vehicles.

We did not propose NCPs for the other new standards because they did not meet all three of the generic NCP criteria. No comments were received during the public comment period indicating that NCPs should be proposed for these other new standards. See the NPRM for additional detail on the consideration of these standards for NCPs. For the reasons stated in the NPRM, EPA therefore is not adopting NCPs at this time for the other new standards.

As discussed in section I.A., EPA must determine that three criteria are met in order to determine that an NCP should be established in any given model year. For the model year 2004 heavy-duty diesel NMHC+NO_X standard, we believe these criteria have been met and it is therefore appropriate to establish NCPs for the 2004 model year NMHC+NO_X standard.

The first criteria requires that the emission standard in question must become more difficult to meet. This is the case with the 2004 NMHC+NO_X standard. The previous emission standards to which manufacturers must certify for this category are 4.0 g/bhp-hr NO_X and 1.3 g/bhp-hr HC. The 2004 standard is a combined NMHC+NO_X standard of 2.4 g/bhp-hr, or optionally a 2.5 g/bhp-hr NMHC+NO_X with a limit of 0.5 g/bhp-hr NMHC.[1] When promulgated, the Agency concluded that the 2004 standard was a technology forcing standard, and therefore it is reasonable to conclude that the increased level of stringency made the standard more difficult to meet.

The second criteria which must be met in order for EPA to determine that an NCP should be established is the determination that substantial work must be required to meet the emission standard. This criteria has also been met. As discussed in both the 1997 final rule (see 62 FR 54694, October 21, 1997) which established the 2004 standards, as well as the 2000 final rule (see 65 FR 59896, October 6, 2000) which reaffirmed those standards, EPA projected that new emission control technologies would be needed to achieve the 2004 standards. In these previous rulemakings EPA identified technologies such as cooled exhaust gas recirculation (EGR) and variable geometry turbochargers (VGT) as some of the technologies manufacturers could use to meet the 2004 standards. Such technologies have not previously been used in the on-highway heavy-duty diesel market, and EPA estimated substantial research and development efforts by the engine manufacturers would be undertaken to meet the 2004 standards. We continue to believe such new technologies will be used by a number of engine manufacturers, and in fact several manufacturers have indicated in recent statements that they will use new emission control technologies in order to achieve the 2004 standards.[2]

The final criteria for EPA to determine that an NCP should be established is that a technological laggard is likely to develop. There are several reasons to believe a technological laggard is likely, as discussed below.

First, during our recent discussions with a number of engine manufacturers, several manufacturers have indicated that they are not yet sure that they will be able to make the necessary technological changes to meet the 2004 emission standards for a limited number of their high horsepower rated engines

[1] NMHC stands for non-methane hydrocarbons, which is a measure of total hydrocarbons with the methane emissions subtracted out. For typical on-highway diesel fueled heavy-duty engines, methane emissions are on the order of 10 percent of the total hydrocarbon emissions.

[2] *See* press releases from Caterpillar Inc., Cummins, Detroit Diesel Corp. and Mack, available in EPA Air Docket A–2001–25.

by model year 2004, and may need to use NCPs for a limited time period to certify these configurations in 2004. Nevertheless, manufacturers are exploring a number of technologies to address these limitations.

Second, during recent discussions with engine manufacturers, one manufacturer has indicated that a few low volume engine families currently available may not be ready by 2004. A low volume engine family may require specific and targeted research and development efforts in order to comply with the 2004 standards, and it is reasonable to expect that manufacturers may focus their efforts on these low volume products later in the development process, and time may be too short to bring the product into compliance for the 2004 model year.

Finally, in the final rule completed in 2000 which reaffirmed the 2004 NMHC+NO_X standard, three engine manufactures as well as the Engine Manufacturers Association (EMA), commented that EPA should establish NCPs for the 2004 standards.[3] EMA commented the standards ''will be technology-forcing and likely will result in the inability of some engine manufacturers and/or engine families to comply with the standards.'' Detroit Diesel Corp. commented ''Meeting the 2004 standards will require the use of sophisticated new emission control technology and will require emission durability evaluation over a greatly extended useful life period.* * * Any development setbacks or misjudgement regarding the capability or durability of the new emission control technology could, at the last minute, put an engine manufacturer into a laggard position and prevent certification of an engine family. The likelihood of a technological laggard for 2004 is at least as great and probably much greater than for other standards for which NCPs have been provided.'' When we reaffirmed the 2004 NO_X+NMHC standard in 2000 we agreed that the standards were technology-forcing and that sophisticated technologies would be required, and thus, that the first two eligibility criteria were likely met. However, we concluded at the time that it was too early to determine the likelihood of a technological laggard, and further, that it was not necessary to attempt to make such a judgement at that time. Now we are a year closer to implementation of the 2004 standards, and manufacturers have not withdrawn their claims that the likelihood of a technological laggard is high. The fact that several engine manufacturers as well as a major trade organization have indicated they believe a technological laggard is likely to develop is a relevant indicator for the Agency regarding the technological laggard criteria.

It is clear that most companies and most engine configurations will be able to comply with the standards in 2004. However, based on the discussion above, the Agency believes it is reasonable to conclude that a technological laggard is likely to develop for the 2004 NMHC+NO_X heavy-duty diesel standard.

B. Penalty Rates

This final rule is the most recent in a series of NCP rulemakings. The discussion of penalty rates in the Phase IV rulemaking (58 FR 68532, December 28, 1993), Phase III rulemaking (55 FR 46622, November 5, 1990), the Phase II rulemaking (50 FR 53454, December 31, 1985) as well as the Phase I rulemaking (50 FR 35374, August 30, 1985) are incorporated by reference. This section briefly reviews the penalty rate formula and discusses how EPA arrived at the penalty rates in this final rule.

As in the previous NCP rules, the NCP formula for the 2004 model year standard uses the following parameters: COC_{50}, COC_{90}, MC_{50}, F, and UL. This rule specifies the value for these parameters. The NCP formula for the 2004 model year standard is the same as that promulgated in the Phase I rule. As was done in previous NCP rules, costs include additional manufacturer costs and additional owner costs, but do not include certification costs because both complying and noncomplying manufacturers must incur certification costs. COC_{50} is an estimate of the industry-wide average incremental cost per engine (references to engines are intended to include vehicles as well) associated with meeting the standard for which an NCP is offered, compared with meeting the upper limit. More precisely, the values of COC_{50} presented here are estimates of the sales weighted mean incremental cost.

COC_{90} is EPA's best estimate of the 90th percentile incremental cost per-engine associated with meeting the standard for which an NCP is offered, compared with meeting the associated upper limit. MC_{50} is an estimate of the industry-wide average marginal cost of compliance per unit of reduced pollutant associated with the least cost effective emission control technology installed to meet the new standard. MC_{50} is measured in dollars per g/bhp-hr for HDEs. F is a factor used to derive MC_{90}, the 90th percentile marginal cost of compliance with the NCP standard for engines in the NCP category. MC_{90} defines the slope of the penalty rate curve near the standard and is equal to MC_{50} multiplied by F. UL is the upper limit above which no engine may be certified. UL is specified for each of the four service classes for which NCPs are promulgated.

Table 1 displays the parameter values to be used in the NCP formula for the 2004 and later model year NMHC+NO_X standard of 2.5 g/bhp-hr for diesel heavy-duty engines and diesel urban bus engines at full useful life. The derivation of the NCP cost parameters is described in a support document entitled ''Technical Support Document: Nonconformance Penalties for 2004 Highway Heavy-Duty Diesel Engines,'' (TSD) which is available in the public docket for this rulemaking. All costs are presented in 2001 dollars. Because we are trying to account for cost differences over time, all costs were converted to net present value (NPV) for calendar year 2004 using a discount rate of seven percent.

TABLE 1.—NCP CALCULATION PARAMETERS

Parameter	Light heavy-duty diesel Engines (LHDDE)	Medium Heavy-duty diesel Engines (MHDDE)	Heavy heavy-duty diesel Engines (HHDDE)	Urban bus engines
COC_{50}	$1,240	$2,740	$6,810	$3,930
COC_{90}	$2,710	$4,930	$12,210	$6,660
MC_{50}	$2,000 per g/bhp-hr	$1,400 per g/bhp-hr	$5,600 per g/bhp-hr	$3,800 per g/bhp-hr
F	1.3	1.3	1.3	1.3
UL (NO_X+NMHC)	4.5 g/bhp-hr	4.5 g/bhp-hr	6.0 g/bhp-hr	4.5 g/bhp-hr

[3] *See* EPA Air Docket A–98–32, comments from Navistar (item IV–D–29), Mack Truck (IV–D–06), Detroit Diesel Corp. (IV–D–28), and EMA (IV–D–05).

The calculation parameters listed in Table 1 are used to calculate the actual penalty rates for each heavy-duty service class. These parameters are used in the penalty rate formulas which are defined in the existing NCP regulations (See 40 CFR 86.1113(a)(1) and (2)). Figures 1–4 below show the approximate first-year penalties for different compliance levels for each service class. This curves were determined using the parameters in Table 1, and the general equations in the regulations. To determine actual penalties you would also need to include the annual adjustment factors specified in the regulations and the inflation adjustment. Thus, these figures, which are shown here for illustrative purposes only, cannot be used to determine the actual penalty amount to be paid by a manufacturer.

BILLIND CODE 6560–50–P

Figure 1 - Approximate Light-Heavy Penalty Rates

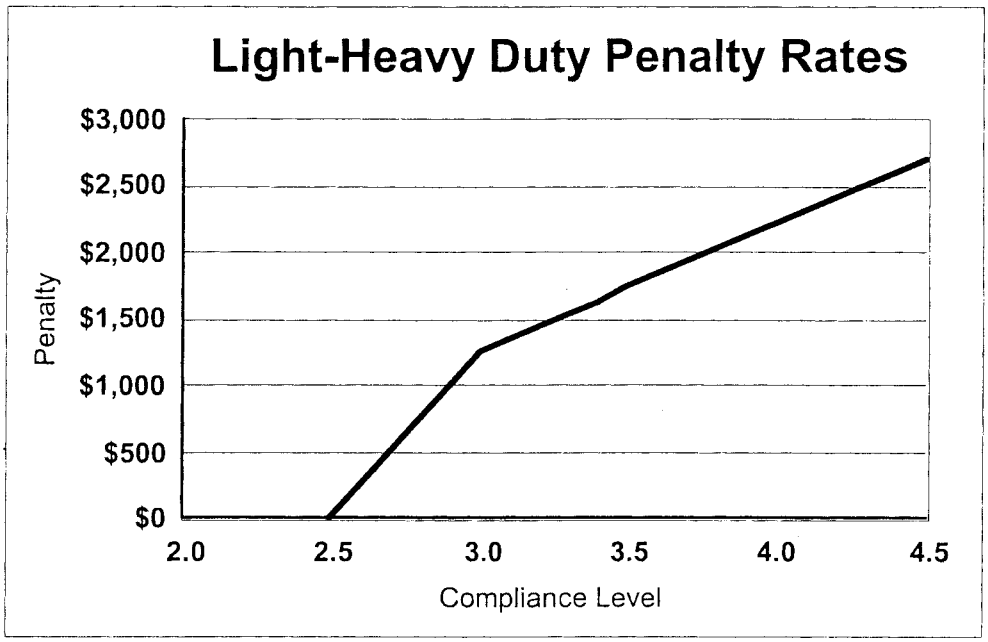

Figure 2 - Approximate Medium-Heavy Penalty Rates

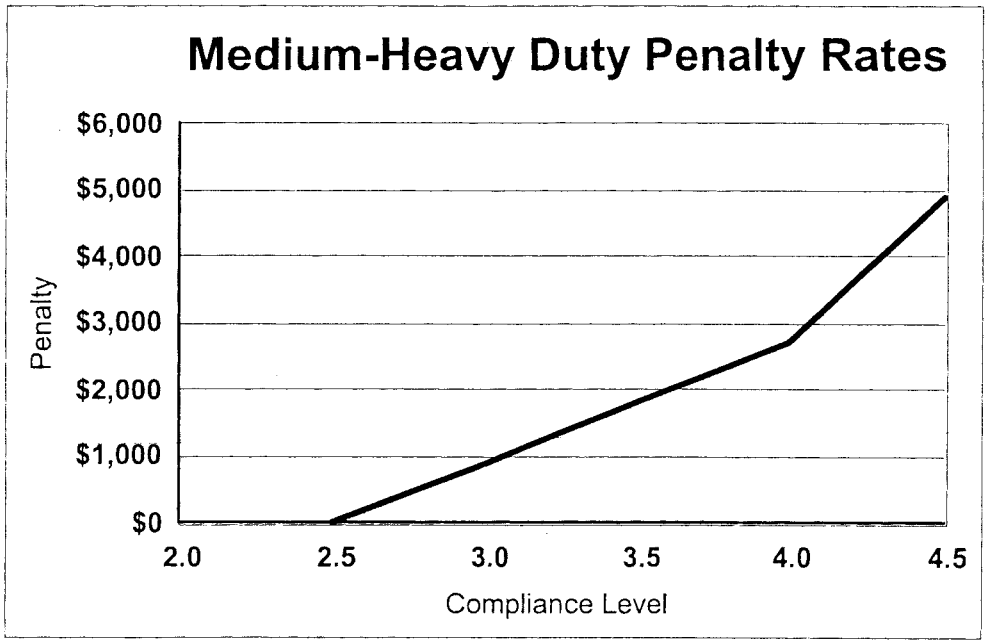

Figure 3 - Approximate Heavy-Heavy Penalty Rates

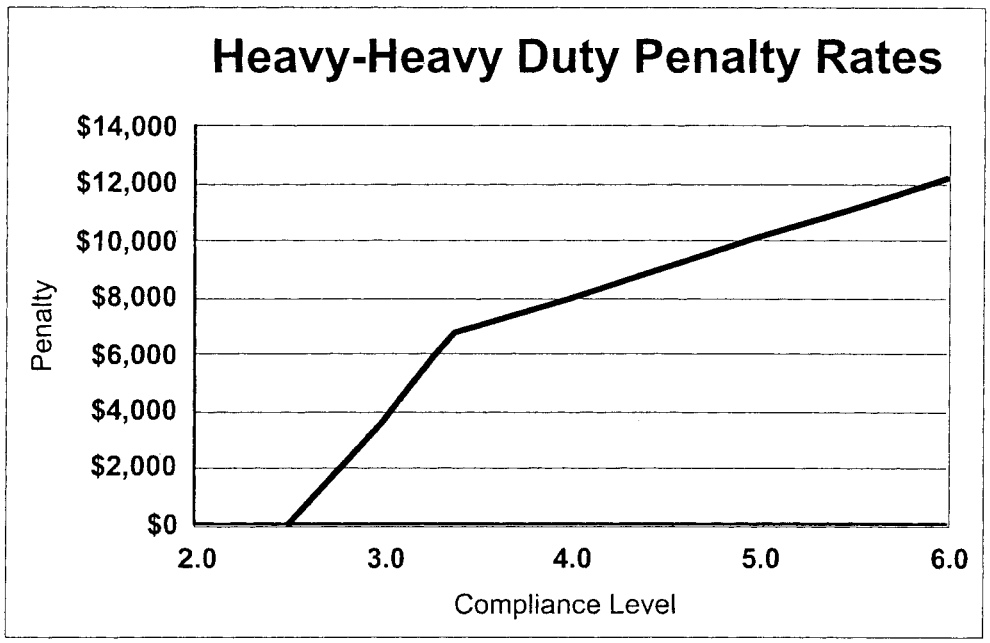

Figure 4 - Approximate Urban Bus Penalty Rates

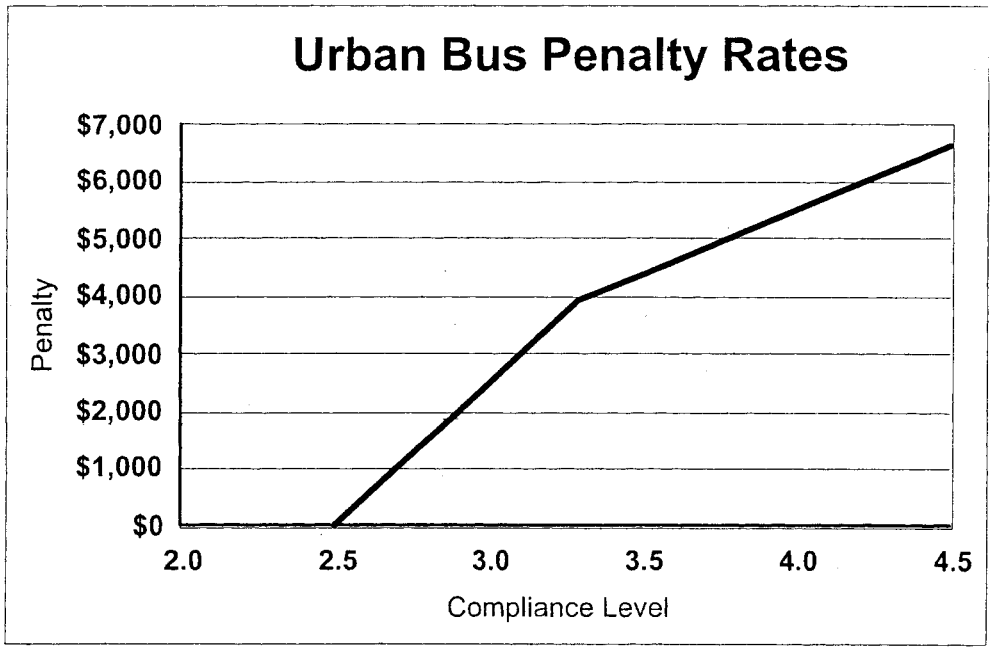

BILLING CODE 6560–50–C

During the rulemaking we asked for comment on all aspects of our analysis including the cost information used and the manner in which we analyzed it. We received only a small amount of additional information after the proposal and we incorporated this information into the overall analysis. Beyond that, we held in-depth discussions with several manufacturers to determine whether the information they provided for the NPRM was still current and the best available in the context of ongoing business decisions, projected technological progress, and cost reduction efforts. Based on the comments and other new information, we have updated our analysis from that used in the NPRM. These changes are described in the Technical Support Document. While most of the changes were relatively minor, we made four adjustments to the methodology that are more significant:

- For heavy heavy-duty engines, we estimated that by the 2004, the average fuel consumption would be about one-half percent better than current manufacturer estimates. Manufacturers

made it clear that fuel economy improvement was a top priority and are making public projections about further improvements by 2004.

• In the NPRM we based our diesel fuel price on the 2000 average of about $1.50 per gallon and asked for comment on using a 3–5 year average as opposed to a one year value. As is discussed below, we are using a fuel price of $1.29 per gallon, which is the average diesel fuel price for 1997 through 2001.

• A review with the manufacturers revealed that in providing their cost estimates for 2004 they did not incorporate manufacturing learning from the consent decree pull ahead engines. We included a learning curve benefit of 10 percent for heavy-heavy duty engines.

• Manufacturer warranty cost estimates varied by more than a factor of ten. In the NPRM we used a sales-weighted average. Through discussions with manufacturers, we learned that the broad range in estimates was a result of different approaches used by companies to address warranty costs, such that a straight average of the estimates is not the appropriate way to project actual costs. Thus for the final rule we based warranty on a flat percentage of the average rather than the average itself for most service classes.

The table below compares the COC_{50} and COC_{90} values for the NPRM and FRM.

TABLE 2.—NCP PARAMETER COMPARISONS

Service class	COC_{50} NPRM	COC_{50} FRM	COC_{90} NPRM	COC_{90} FRM
LHDDE	$1,080	$1,240	$2,610	$2,710
MHDDE	3,360	2,740	6,870	4,930
HHDDE	8,940	6,810	14,790	12,210
Urban Bus	4,400	3,930	7,120	6,660

III. Significant Issues Raised in This Rulemaking

This section discusses several significant issues raised in this rulemaking, including comments on the proposal. Additional issues are also discussed in the Technical Support Document and Response to Comments documents.

A. Relation of NCP Costs to Rulemaking Costs

Traditionally, NCP costs are different than those presented in the rulemaking analysis which implemented the standards. This occurs for several reasons:

• NCP costs represent first year costs and thus generally do not include the effects of manufacturing learning that occurs in reality and is included in the rulemaking cost analysis, but do include the full amortized annual fixed costs which are eliminated after the first few years of production

• Cost information gathered from manufacturers and vendors during the NCP rulemaking process reflects a more complete understanding of the optimum technology path for compliance and the operating costs and savings which occur over the life of the vehicle/engine as compared to the information that existed during the standard-setting rulemaking

• The NCP is by statute intended to protect the complying manufacturer and thus it is important to avoid underestimating reasonably projected actual costs.

However, this specific case is unique. The analysis presented in the NCP TSD results in costs that differ from the estimated costs presented in the rulemaking that initially established the 2004 standards (62 FR 54694, October 21, 1997), as well as the rulemaking that affirmed the 2004 standards and updated the cost analysis (65 FR 59896 October 6, 2000). There are several key reasons that account for these differences. The most important reason is the difference in the emission characteristics of the baseline engine used in the analysis. When the rulemaking costs were determined in 1997, the agency assumed a 1998 model year engine in full compliance with the 4.0 g/bhp-hr NO_X level as the baseline for the 2004 standard. As discussed above, after that rule was promulgated, it became evident that all manufacturers were not fully complying with the 4.0 g/bhp-hr NO_X level and in fact in some cases were emitting at levels far in excess of the standard during significant periods of operation. We proposed an upper limit of 6.0 g/bhp-hr NMHC+NO_X for the 2004 NCP for heavy heavy-duty diesel engines because that baseline value reasonably represents the current emissions characteristics of nearly all 2001 heavy heavy-duty engines. This distinction between baselines is critical to the cost analysis and creates a fundamental difference between the estimated costs presented in this NCP final rule and the estimated costs presented in the standard-setting rulemaking.

The compliance costs estimated in the standards setting rulemaking for the heavy heavy-duty engine service class were intended to reflect the cost associated with bringing an engine in full compliance with the current standard of 4.0 g/bhp-hr NO_X into full compliance with the 2004 NMHC+NO_X standard of 2.5 g/bhp-hr. In this NCP rulemaking, however, the penalty rate factors for heavy heavy-duty were based on the costs required to bring an engine at the 6.0 g/bhp-hr Upper Limit (e.g., a 2001 model year engine) into compliance with the 2004 model year standard. The fundamental properties of the existing engines in 2001, however, are not what was envisioned by or incorporated into the analyses performed for the rulemakings that established and confirmed the 2004 standards. This important distinction between the baselines engines impacts every cost category considered in the NCP rule. Much of the cost associated with the heavy heavy-duty service class NCPs are attributable to those costs required to remedy the non-compliance with the current 4.0 g/bhp-hr NO_X standard while reducing emission to meet the 2004 standards, and are not attributable solely to the 2004 standards. Consider the following:

• A heavy heavy-duty diesel engine in full compliance with the current 4.0 g/bhp-hr NO_X standard would likely have sustained little or no increased fuel costs relative to an engine meeting the 2004 standard of 2.5 g/bhp-hr NMHC+NO_X. The fuel economy ''penalty'' associated with bringing an Upper Limit engine into compliance with the 2004 standards is probably equivalent to the penalty that would have resulted from bringing a current non-complying engine into compliance with the defeat device prohibition. Thus, the cost of reduced fuel economy is incorporated into the NCP costs, but not into the estimated long-term rulemaking costs.

• A heavy heavy-duty diesel engine in full compliance with the current 4.0 g/bhp-hr NO_X standard would have incorporated different, more advanced emission control techniques and hardware to comply with the 4.0 g/bhp-hr standard than have been incorporated on current 6.0 g/bhp-hr engines that do not fully comply with the current regulations. Thus, additional costs associated with implementing additional control technologies for 6.0 g/bhp-hr engines, which are incorporated into the NCP costs, include some hardware and development costs that would not have been applicable for the rulemaking analysis where the baseline was a compliant 4.0 g/bhp-hr engine.

• A heavy heavy-duty diesel engine in full compliance with the current 4.0 g/bhp-hr NO_X standard would possibly have had more frequent oil change intervals, resulting in higher baseline maintenance costs than the current 6.0 g/bhp-hr non-complying engines. The NCP costs presented in this rule incorporate the lower operating costs of today's engines in the baseline, with an associated increase in operating costs to comply with the 2.5 g/bhp-hr standard. However, the operating costs estimated in the rulemakings that established the 2004 standards were based on engines in full compliance with the 4.0 g/bhp-hr NO_X standard.

Thus, the use of fundamentally different baselines accounts for a substantial amount of the difference between the resulting cost estimates for heavy heavy-duty diesel engines. In addition, as is described in the Technical Support Document, even for the other service classes that have Upper Limits based directly on the 4.0 g/bhp-hr NO_X standard, the impact on engine designs of the alleged defeat device strategies used by a number of engine manufacturers over the past decade makes comparison between the standard-setting rule cost analysis and this analysis difficult.

While the baseline issue described above is the most important reason for the differences between the NCP costs and the rulemaking costs, there is a second major reason for the difference. Unlike the case with a rulemaking analysis, it is the objective of this NCP analysis to focus solely on the compliance costs associated with the first year of production. This has been the historical approach to incorporating cost parameters into the determination of the NCP. Regulatory actions that establish emission standards require analyses with a longer term view, projecting costs out into future years and decades and not focusing solely on the costs in the first year. As one would expect, the immediate costs associated with the first year of production are higher than the long-term costs and are not representative of long-term costs because manufacturers often make significant progress in reducing certain costs over time. This is especially true for costs associated with hardware, reliability, and fuel consumption.

Finally, in the process of conducting our cost analysis for this NCP rule, some new information was provided that was not brought to our attention during the prior rulemaking processes. For example, the NCP analysis includes costs attributable to the truck manufacturer (as opposed to the engine manufacturer) that result from having to accommodate new engine configurations with increased size and/or weight in their trucks. We have also included the negative impact on revenue due to the increased weight of the engine and the resulting loss in freight capacity, as well as the impact of post-warranty repair costs. We believe that incorporation of this information is appropriate to include in the NCP cost estimation analysis as it represents industries' most current perspective on compliance costs.

B. Discount Rate

In the NPRM, we derived the factors for the NCP formula using the net present value (NPV) of manufacturer and user costs. Consistent with other EPA rulemaking analyses, a compounding/discount rate of seven percent was used in these calculations. We also presented the values using a rate of three percent and asked for comment on the issue including input on which of two values was more appropriate or if another value or set of values was more representative of industry practice. As is discussed in the Response to Comments document, the response was mixed. Some commenters supported seven percent, some three percent, and one commenter supported using different rates for compounding pre-production costs and discounting user costs but did not suggest values for these industry sectors. Given this mixed response, EPA has decided to continue to use the seven percent value as it is clear from the comments that this rate is adequately representative of industry practice and thus will protect the complying manufacturers. Nonetheless, EPA will continue to seek more information on this issue for consideration in future rule analyses.

C. Upper Limit

The upper limit is the emission level established by regulation above which NCPs are not available and a heavy duty engine cannot be certified or introduced into commerce. CAA section 206(g)(2) refers to the upper limit as a percentage above the emission standard, set by regulation, that corresponds to an emission level EPA determines to be ''practicable.'' The upper limit is an important aspect of the NCP regulations not only because it establishes an emission level above which no engine can be certified, but it is also a critical component of the cost analysis used to develop the NCP factors. The regulations specify that the relevant NCP costs for determining the COC_{50} factors are the difference between an average engine at the upper limit and one that meets the new standards (*see* 40 CFR 86.1113–87).

The regulatory approach adopted under the first NCP rule sets the Upper Limit (UL) at the prior emission standard when a prior emission standard exists and that standard is changed and becomes more stringent. EPA concluded that the UL should be reasonably achievable by all manufacturers with vehicles in the relevant class. It should be within reach of all manufacturers of HDEs or HDVs that are currently allowed so that they can, if they choose, pay NCPs and continue to sell their engines and vehicles while finishing their development of complying engines. A manufacturer of a previously certified engine or vehicle should not be forced to immediately remove an HDE or HDV from the market when an emission standard becomes more stringent. In past NCP rules, the prior emissions standard meet these goals, because manufacturers had already certified their vehicles to that standard. In the first NCP rule, EPA rejected a suggestion that the upper limit should be more stringent than the prior emission standard, because it would be very difficult to identify a limit that would be within reach of, and could be met by, all manufacturers.

In this final action, we have established an Upper Limit for light-heavy, medium-heavy and urban bus engines of 4.5g/bhp-hr NMHC+NO_X, and for the heavy-heavy service class we have established an Upper Limit of 6.0 g/bhp-hr NMHC+NO_X. These final rule Upper Limit values are identical to the proposed values.

In this case, the new standard is a limit on the combination of NO_X+NMHC, while the prior regulatory standards are separate limits, one for NO_X and one for total HC. In addition, in establishing the Upper Limit we took into consideration that for a large portion of the industry, there are also

emissions limits set under judicial Consent Decrees (CD), many of which vary from the regulatory standards, in particular for the heavy-heavy service class as discussed latter in this section. The Consent Decrees establish legally binding requirements on the manufacturers that directly affect the way engine manufacturers design their engines. In many cases it is the CD limits, and not the regulatory standards, that are the controlling factor and dictate the level of emissions control required on engines produced during the term of the Decrees. Since the purpose of an NCP is to address the real world problems associated with a transition from a prior emissions requirement to a new more stringent requirement, it is appropriate to take the CD requirements into account where the levels required under the CDs are in fact the controlling factor in establishing the prior level of control.

For light heavy-duty, medium heavy-duty, and urban bus engines, the CD requirements are consistent with the regulatory requirements for the current FTP-based standards and the defeat device prohibition. Manufacturers are currently certifying to the emissions levels provided under the CD. An examination of model year 2001 certification data shows that for both CD and non-CD engine manufacturers, engines are generally being certified with HC emissions below 0.3 g/bhp-hr, and no engines in these service classes certified to the 4.0 g/bhp-hr NO_X standard have a combined NO_X plus HC emission level greater than 4.5 g/bhp-hr.[4] Therefore, an UL of 4.5 g/bhp-hr NO_X+NMHC on the FTP is most consistent with the policy approach embodied in 40 CFR 86.1104–91, allowing continued production of current engines, but not allowing backsliding. We received only supportive comments on the proposal to establish an Upper Limit of 4.5 g/bhp-hr NMHC+NO_X for the light heavy-duty, medium heavy-duty, and urban bus engines.

For heavy heavy-duty engines, however, the CDs provides a significantly different approach. For these engines, limits are set for Euro III and not-to-exceed (NTE) levels that allow for significantly higher emissions off the FTP than EPA would expect to allow under the defeat device prohibition. While the CDs, like the regulations, require the use of the FTP to measure emissions, it is the level of off-cycle control (e.g., control of emissions during operation not fully represented during the FTP, but which are captured by the supplemental tests contained in the CDs, the Euro III and NTE tests) that drives the design requirements for the engine manufacturers. They are the legal requirements that drive the level of control embodied in the engine design. Model year 2001 certification data shows that combined HC and NO_X emissions for these engines are at or below 6.0 g/bhp-hr when measured using the Euro III test.[5]

This NCP rulemaking focuses on technological laggards, which would be those heavy-duty engines that need more lead time to comply with the 2004 NO_X+NMHC standard. For heavy heavy-duty engines, the prior actual level of control that many manufacturers are now achieving and certifying to is established by the CDs and not by the 1998 regulatory emission standards. As such, an UL at the level of control required under the CD would set a level that is within the reach of all manufacturers, including the technological laggards. It would be reasonably achievable by all manufacturers in this class, and would avoid forcing the technical laggards to remove an engine from the market when the 2004 emissions standards go into effect. It would allow continued production of current engines but would not allow backsliding. A 6.0 g/bhp-hr Upper Limit, therefore, is consistent with the policy embodied in the NCP regulations.

EPA recognizes that under the CD this group of heavy-duty engines is also required to achieve the 2004 emissions levels by October 2002. However, as discussed before, EPA has determined that there is likely to be a technological laggard for purposes of meeting the 2004 standards. The prior deadline in the CD does not change this determination, and means only that some manufacturers would also be subject to the requirements in the CD, including its compliance and enforcement provisions. The CDs allow manufacturers to pay penalties to produce engines which emit above the October 2002 emission limits defined in the CDs, thus the CDs also provide a mechanism for technological laggards to continue to produce today's engines.

EPA also recognizes that the CD calls for compliance with a 4.0 NO_X standard on the FTP and with a 6.0 NO_X limit for the Euro III test procedure for today's engines, and the 6.0 g/bhp-hr UL we are proposing is for the FTP. 2004 MY engines eligible for certification under this NCP rule will need to meet the applicable FTP standard and will also need to comply with the defeat device prohibition. However, a 2004 MY engine with EURO III levels significantly higher than its FTP levels would raise significant concerns about compliance with the defeat device prohibition. While the Euro III is not a regulatory emissions standard in 2004, it is representative of typical highway cruise operation and EPA uses EURO III emissions levels as a screening tool in evaluating compliance with the defeat device prohibition. See Advisory Circular 24–3. If EPA sets the UL at 6.0 g/bhp-hr NO_X+NMHC for the FTP, continued production of engines with EURO III levels comparable to 2001 MY levels of 6.0 g/bhp-hr would not be expected to raise significant defeat device concerns. However, if EPA were to set the UL at 4.5 g/bhp-hr NO_X+NMHC for the FTP, an engine with EURO III emissions levels of approximately 6.0 g/bhp-hr, like current CD engines, would raise very significant concerns about defeat device compliance, based on the disparity between FTP and EURO III levels, EPA would not expect that such an engine could be certified. Setting an UL at 6.0 g/bhp-hr is therefore appropriate as it should allow for the continued production of engines with EURO III levels comparable to those allowed under the CD for MY 2001.

We received comments both supporting and opposing an Upper Limit of 6.0 g/bhp-hr for the heavy-heavy service class. One commenter who opposed the 6.0 value suggested that an UL of 4.5 was appropriate for the heavy-heavy engines. However, an UL of 4.5 NO_X +NMHC would require that CD engine manufacturers significantly reduce the level of off-cycle emissions for these engines. Such an emission reduction would require significant design changes for existing engines at the same time design work is underway to meet the 2.5 standard. This approach is inconsistent with the policy EPA has used in past NCP rulemakings, where the Upper Limit has been established at a level which would allow engine manufacturers to continue to focus on developing the technology necessary to comply with the new emission standards rather than diverting resources to comply with an intermediate emission level more stringent than existing products but not at the level of the new standard. A more

[4] EPA Memorandum ''Summary of Model Year 2001 Heavy-duty Diesel Engine HC and NO_X Certification Data'', copy available in the docket for this rulemaking.

[5] EPA Memorandum ''Summary of Model Year 2001 Heavy-duty Diesel Engine HC and NO_X Certification Data'', copy available in the docket for this rulemaking.

detailed discussion of the comments we received and our response to those comments is contained in the Response to Comments document for this final rule.

D. Use of Penalty Funds

Some of the comments on the proposed rule suggested that the revenues generated by the NCPs should be used for clean air projects, such as regional PM and toxics reduction projects and diesel retrofit projects. It is not within EPA's authority or ability to direct the use of the penalty monies. Section 206(g) of the Clean Air Act, 42 U.S.C. § 7525(g), authorizes EPA to establish nonconformance penalties, but it does not authorize EPA to retain and use any penalty monies paid by a manufacturer. Absent such authority to retain and use penalty monies received, the Miscellaneous Receipts Act, 31 U.S.C. § 3302(b), requires that such monies be deposited in the General Revenue Fund of the U.S. Treasury. Funds deposited in the General Revenue Fund may then be appropriated by Congress.

E. Incorporating Factors Not Provided for in the NCP Regulations

In the NPRM EPA invited comment on whether an adjustment to the NCP level should be added to account for the potential competitive benefits gained by producing an engine that has better performance characteristics compared to a complying engine. EPA invited comment on whether the current cost factors used to develop the NCP levels, such as warranty and related costs, fully reflected the competitive benefits gained in the marketplace by such a non-complying engine. EPA indicated there was significant uncertainty in this regard, and that in any case it would be hard to quantify this competitive benefit with adequate certainty.

EPA asked for comment on this issue and for input on how to accommodate it in protecting the complying manufacturer. Two companies supported this concern and one suggested an approach based on including the lost profit margin in the NCP. EPA sees no practical way to implement this comment. It would require proprietary profit margin, cost, price, and perhaps other economic analysis information for this industry (e.g., price elasticity) not available to EPA even to evaluate it, and even at that it is difficult to judge the degree to which the purchaser perception will affect purchase decisions (i.e., how many engine purchases will switch to NCP engines based solely on this concern). The comments did not provide adequate information to evaluate the incorporation of an additional adjustment. Given the uncertainty and difficulty in quantifying the purchaser perception element EPA cannot incorporate an additional element in the NCP formula at this time. Nonetheless, we will continue to consider this issue in the future, including evaluating whether there is usable data available to quantify this factor for future NCP rules.

F. Fuel Cost

One of the most significant categories of cost is the cost related to the impact of the standards on fuel consumption rates. However, this cost element is difficult to estimate because actual fuel costs will vary based on the price of the fuel and on the vehicle operation. We proposed to use the current fuel price, but we also requested comment on the use of an average fuel price. As described below, we now believe that a five-year average best approximates future actual fuel costs considering the economic significance of changes in fuel consumption rates.

Fuel price varies with time and with location. According to the Energy Information Administration (EIA), the national average highway diesel fuel price in February of 1999 was 95 cents per gallon (with taxes), but in October of 2000 it was $1.67 per gallon (with taxes). That represents a 76 percent increase in the fuel price within a two year period. Figure 5 shows the variation in diesel fuel prices adjusted for inflation. In terms of constant dollars, the price of diesel fuel in the late 1990s was unusually low. We believe that a five-year average most appropriately addresses the longer term trends of fuel prices. Thus, we calculated the fuel consumption impacts using a fuel price of $1.29 per gallon for calendar years 2004 and 2005, which represents the five-year average retail price of on-highway diesel fuel for 1997 through 2001 (EIA estimate) adjusted using the Consumer Price Index (CPI) to be equivalent to 2001 dollars, plus 44 cents for federal and state tax. We use a fuel price of $1.34 per gallon for later calendar years to account for the introduction of lower sulfur fuel.

Figure 5: Diesel Fuel Price Variation

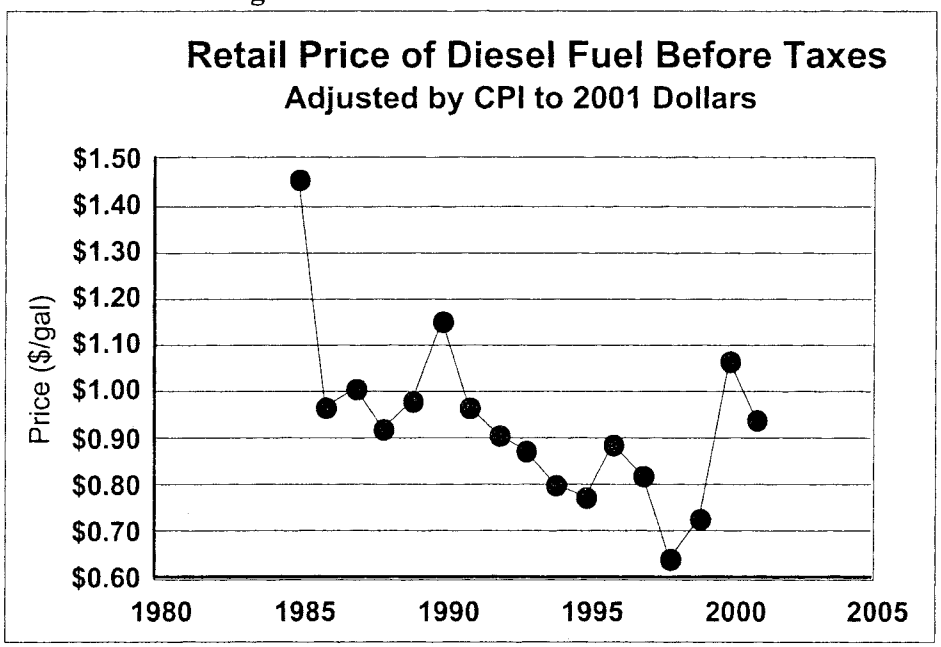

Another important factor in estimating fuel cost is how much fuel a model year 2004 vehicle will use over its lifetime. This is most important for heavy-heavy duty engines. Some vehicles may be scrapped after their regulatory useful life (435,000 miles) while others may be rebuilt more than once and not be scrapped until after 2 million miles. Thus, the fuel cost could vary by a factor of four from one vehicle to another. We addressed this by using estimated average lifetime mileages of each service class for our COC_{50} analysis, and high mileage estimates for the COC_{90} analysis. The mileage estimates that we used in our analysis are shown in the table below. The Technical Support Document provides more information about how we used these mileage estimates (*see* Chapter III).

ESTIMATES OF LIFETIME VEHICLE MILES TRAVELED (VMT) USED IN COST ANALYSIS

	VMT for average vehicle	VMT used for COC_{90} analysis
Light Heavy	209,000	280,000
Medium Heavy ..	262,000	343,000
Heavy Heavy	767,000	1,000,000

IV. Economic Impact

Because the use of NCPs is optional, manufacturers have the flexibility and will likely choose whether or not to use NCPs based on their ability to comply with emissions standards. If no HDE manufacturer elects to use NCPs, these manufacturers and the users of their products will not incur any additional costs related to NCPs. NCPs remedy the potential problem of having a manufacturer's engines forced out of the marketplace due to that manufacturer's inability to conform to new, strict emission standards in a timely manner. Without NCPs, a manufacturer which has difficulty certifying HDEs in conformance with emission standards or whose engines fail a Selective Enforcement Audit has only two alternatives: fix the nonconforming engines, perhaps at a prohibitive cost, or do not introduce them into commerce. The availability of NCPs provides manufacturers with a third alternative: upon payment of a penalty, continue production and introduce into commerce an engine that exceeds the standard until an emission conformance technique is developed. Therefore, NCPs represent a regulatory mechanism that allows affected manufacturers to have increased flexibility. A decision to use NCPs may be a manufacturer's only way to continue to introduce HDEs into commerce. The NCP rates promulgated in this rule will also be used to set the per engine penalty under the October 1998 consent decrees between several heavy-duty diesel engine manufacturers and the EPA. EPA recognizes that if we did not set this rule the per engine penalty under fallback provisions in the consent decrees would be less. We expect the net difference in effect between the rule and the fallback provisions (assuming the rule becomes final before October 1, 2002) would be less than $100 million in total for any year in which the consent decree penalties are an option for the manufacturers.

V. Environmental Impact

When evaluating the environmental impact of this rule, one must keep in mind that, under the Act, NCPs are a consequence of enacting new, more stringent emissions requirements for heavy duty engines. Emission standards are set at a level that most, but not necessarily all, manufacturers can achieve by the model year in which the standard becomes effective. Following International Harvester v. Ruckelshaus, 478 F. 2d 615 (D.C. Cir. 1973), Congress realized the dilemma that technology-forcing standards might cause for motor vehicle manufacturers, and allowed manufacturers of heavy-duty engines to certify nonconforming vehicles/engines upon the payment of an NCP, under certain conditions. This mechanism would allow manufacturer(s) who cannot meet technology-forcing standards immediately to continue to manufacture these nonconforming engines while they tackle the technological problems associated with meeting new emission standard(s). Thus, as part of the statutory structure to force technological improvements while avoiding driving manufacturers out of the market, NCPs provide flexibility that fosters long-term

emissions improvement through the setting of lower emission standards at an earlier date than might otherwise be possible. By design, NCPs encourage the technological laggard that is using NCPs to reduce emission levels to the more stringent standard as quickly as possible.

However, we believe that the potential exists for there to be more widespread use of the NCPs in this rule in comparison to prior NCPs, thus indicating the possibility for an environmental impact somewhat greater in magnitude than we have suggested in prior NCP rules. Nevertheless, we believe that any such impacts would be short-term in nature. By including an annual adjustment factor that increases the levels of the penalties, the NCP program is structured such that the incentives to produce engines that meet the standards increase year-by-year. The practical impact of this adjustment factor is that the NCPs will rapidly become an unattractive option for non-complying manufacturers. However, we are not able to predict at this time how many manufacturers will make use of the NCPs, how many engine families would be subject to the NCP program, or what level of emissions the engines will exhibit. Because of these uncertainties we are unable to accurately quantify the potential impact the NCPs might have on emission inventories, although, as stated above, any impacts are expected to be short-term in nature.

VII. Administrative Requirements

A. Regulatory Planning and Review: Executive Order 12866

Under Executive Order 12866 (58 FR 51735, Oct. 4, 1993), the Agency is required to determine whether this regulatory action would be ''significant'' and therefore subject to review by the Office of Management and Budget (OMB) and the requirements of the Executive Order. The order defines a ''significant regulatory action'' as any regulatory action that is likely to result in a rule that may:

- Have an annual effect on the economy of $100 million or more or adversely affect in a material way the economy, a sector of the economy, productivity, competition, jobs, the environment, public health or safety, or State, local, or tribal governments or communities;
- create a serious inconsistency or otherwise interfere with an action taken or planned by another agency;
- materially alter the budgetary impact of entitlements, grants, user fees, or loan programs or the rights and obligations of recipients thereof; or,
- raise novel legal or policy issues arising out of legal mandates, the President's priorities, or the principles set forth in the Executive Order.

Pursuant to the terms of Executive Order 12866, the Office of Management and Budget (OMB) has notified EPA that it considers this a ''significant regulatory action'' within the meaning of the Executive Order. This action was submitted to OMB for review as required by Executive Order 12866. For this reason, written comments from OMB on today's action and documents submitted to OMB are in the public docket for this rulemaking.

B. Regulatory Flexibility Analysis

EPA has determined that it is not necessary to prepare a regulatory flexibility analysis in connection with this final rule. EPA has also determined that this rule will not have a significant economic impact on a substantial number of small entities. For purposes of assessing the impact of today's rule on small entities, small entities are defined as: (1) A small business that has no more than 1,000 employees; (2) a small governmental jurisdiction that is a government of a city, county, town, school district or special district with a population of less than 50,000; and (3) a small organization that is any not-for-profit enterprise which is independently owned and operated and is not dominant in its field.

After considering the economic impacts of today's final rule on small entities, EPA has concluded that this action will not have a significant economic impact on a substantial number of small entities. This final rule will not impose any requirements on small entities. The NCPs that are established by this final rule are for emission standards that pertain to heavy-duty diesel engines. When these emission standards were established, the final rulemaking (65 FR 59895, October 6, 2000) noted that only two small entities were known to be affected. Those entities were small businesses that certify alternative fuel engines or vehicles, either newly manufactured or modified from previously certified gasoline engines. The emission standards for heavy-duty diesel engines, for which NCPs are promulgated in this final rule, do not pertain to the engines manufactured by these businesses.

C. Compliance with the Paperwork Reduction Act

The information collection requirements in this final rule have been submitted for approval to the Office of Management and Budget (OMB) under the Paperwork Reduction Act, 44 U.S.C. 3501 *et seq.* An Information Collection Request (ICR) document has been prepared by EPA (ICR No. 1285.05) and a copy may be obtained from Susan Auby by mail at U.S. Environmental Protection Agency (2822), Office of Environmental Information, Collection Strategies Division, 1200 Pennsylvania Avenue., NW., Washington, DC 20460, by email at *auby.susan@epamail.epa.gov,* or by calling (202) 566–1672. A copy may also be downloaded off the internet at *http://www.epa.gov/icr.* The following ICR document has been prepared by EPA:

EPA ICR #	Title
1285.05	Nonconformance Penalties for Heavy-Duty Engines and Heavy-Duty Vehicles, Including Light-Duty Trucks; Reporting and Recordkeeping Requirements.

The Agency will collect information related to nonconformance penalties. This information will be used to ensure compliance with and enforce the provisions in this rule. Responses will be mandatory in order to complete the certification process. Section 206(g) of the Clean Air Act (Act) contains the nonconformance penalty provisions. Section 208(a) of the Clean Air Act requires that manufacturers provide information the Administrator may reasonably require to determine compliance with the regulations; submission of the information is therefore mandatory. EPA will consider confidential all information meeting the requirements of section 208(c) of the Clean Air Act.

This collection of information affects an estimated 2 respondents with a total of 52 responses per year and an total hour burden of 1,178 hours, for an estimated 23 hours per response, with estimated total annualized costs of $18,200.00 per year. The hours and annual cost of information collection activities by a given manufacturer depends on manufacturer-specific variables, such as the number of engine families, production changes, and so forth. Burden means the total time, effort, or financial resources expended by persons to generate, maintain, retain, or disclose or provide information to or for a Federal agency. This includes the time needed to review instructions; develop, acquire, install, and utilize technology and systems for the purposes of collecting, validating, and verifying information, processing and

maintaining information, and disclosing and providing information; adjust the existing ways to comply with any previously applicable instructions and requirements; train personnel to be able to respond to a collection of information; search data sources; complete and review the collection of information; and transmit or otherwise disclose the information.

An Agency may not conduct or sponsor, and a person is not required to respond to a collection of information unless it displays a currently valid OMB control number. The OMB control numbers for EPA's regulations are listed in 40 CFR part 9 and 48 CFR Chapter 15.

Comments are requested on the Agency's need for this information, the accuracy of the provided burden estimates, and any suggested methods for minimizing respondent burden, including through the use of automated collection techniques. Send comments on the ICR to the Director, Collection Strategies Division, Office of Environmental Information, U.S. Environmental Protection Agency (2822); 1200 Pennsylvania Ave., NW., Washington, DC 20460; and to the Office of Information and Regulatory Affairs, Office of Management and Budget, 725 17th St., NW., Washington, DC 20503, marked ''Attention: Desk Officer for EPA.'' Include the ICR number 1285.05 in any correspondence.

D. Unfunded Mandates Reform Act

Title II of the Unfunded Mandates Reform Act of 1995 (UMRA), Public Law 104–4, establishes requirements for Federal agencies to assess the effects of their regulatory actions on State, local, and tribal governments and the private sector. Under section 202 of the UMRA, EPA generally must prepare a written statement, including a cost-benefit analysis, for proposed and final rules with ''Federal mandates'' that may result in expenditures to State, local, and tribal governments, in the aggregate, or to the private sector, of $100 million or more in any one year. Before promulgating an EPA rule for which a written statement is needed, section 205 of the UMRA generally requires EPA to identify and consider a reasonable number of regulatory alternatives and adopt the least costly, most cost-effective or least burdensome alternative that achieves the objectives of the rule. The provisions of section 205 do not apply when they are inconsistent with applicable law. Moreover, section 205 allows EPA to adopt an alternative other than the least costly, most cost-effective or least burdensome alternative if the Administrator publishes with the final rule an explanation why that alternative was not adopted.

Before EPA establishes any regulatory requirements that may significantly or uniquely affect small governments, including tribal governments, it must have developed under section 203 of the UMRA a small government agency plan. The plan must provide for notifying potentially affected small governments, enabling officials of affected small governments to have meaningful and timely input in the development of EPA regulatory proposals with significant Federal intergovernmental mandates, and informing, educating, and advising small governments on compliance with the regulatory requirements.

This final rule contains no Federal mandates (under the regulatory provisions of Title II of the UMRA) for State, local, or tribal governments or the private sector. The final rule will impose no enforceable duty on any State, local or tribal governments or the private sector.

EPA has determined that this rule does not contain a Federal mandate that may result in expenditures of $100 million or more for State, local, and tribal governments, in the aggregate, or the private sector in any one year. Because the use of NCPs is optional, manufacturers have the flexibility and will likely choose whether or not to use NCPs based on their ability to comply with emissions standards. Without NCPs, manufacturers must either modify the engine to be in compliance with the standards or withdraw the engine from the marketplace. The availability of NCPs provides manufacturers with a third alternative: continue production and introduce into commerce upon payment of a penalty an engine that exceeds the standard until an emission conformance technique is developed. Therefore, NCPs represent a regulatory mechanism that allows affected manufacturers to have increased flexibility. Thus, today's rule is not subject to the requirements of sections 202 and 205 of the UMRA.

EPA has determined that this rule contains no regulatory requirements that might significantly or uniquely affect small governments. The requirements of this rule apply only to the manufacturers of heavy-duty diesel engines.

E. Executive Order 13175: Consultation and Coordination With Indian Tribal Governments

Executive Order 13175, entitled ''Consultation and Coordination with Indian Tribal Governments'' (65 FR 67249, November 6, 2000), requires EPA to develop an accountable process to ensure ''meaningful and timely input by tribal officials in the development of regulatory policies that have tribal implications.''

This final rule does not have tribal implications as specified in Executive Order 13175. The non-conformance penalties and associated requirements in this final rule apply only to heavy-duty diesel engine manufacturers.

F. National Technology Transfer and Advancement Act

Section 12(d) of the National Technology Transfer and Advancement Act of 1995 (NTTAA), Section 12(d) of Public Law 104–113, directs EPA to use voluntary consensus standards in its regulatory activities unless to do so would be inconsistent with applicable law or otherwise impractical. Voluntary consensus standards are technical standards (e.g., materials specifications, test methods, sampling procedures, and business practices) developed or adopted by voluntary consensus standards bodies. The NTTAA directs EPA to provide Congress, through OMB, explanations when the Agency decides not to use available and applicable voluntary consensus standards.

This final rule does not involve technical standards. Therefore, EPA did not consider the use of any voluntary consensus standards.

G. Executive Order 13045: Children's Health Protection

Executive Order 13045: ''Protection of Children from Environmental Health Risks and Safety Risks'' (62FR19885, April 23, 1997) applies to any rule that: (1) Is determined to be ''economically significant'' as defined under Executive Order 12866, and (2) concerns an environmental health or safety risk that EPA has reason to believe may have a disproportionate effect on children. If the regulatory action meets both criteria, the Agency must evaluate the environmental health or safety effects of the planned rule on children, and explain why the planned regulation is preferable to other potentially effective and reasonably feasible alternatives considered by the Agency.

EPA interprets Executive Order 13045 as applying only to those regulatory actions that are based on health or safety risks, such that the analysis required under section 5–501 of the Order has the potential to influence the regulation. This final rule is not subject to Executive Order 13045 because it does not establish an environmental standard intended to mitigate health or safety risks and because it is not economically significant as defined in Executive Order 12866.

H. Executive Order 13132: Federalism

Executive Order 13132, entitled ''Federalism'' (64 FR 43255, August 10, 1999), requires EPA to develop an accountable process to ensure ''meaningful and timely input by State and local officials in the development of regulatory policies that have federalism implications.'' ''Policies that have federalism implications'' is defined in the Executive Order to include regulations that have ''substantial direct effects on the States, on the relationship between the national government and the States, or on the distribution of power and responsibilities among the various levels of government.''

This final rule does not have federalism implications. It will not have substantial direct effects on the States, on the relationship between the national government and the States, or on the distribution of power and responsibilities among the various levels of government, as specified in Executive Order 13132. This final rule adopts NCPs for national emission standards for certain categories of motor vehicles. Thus, Executive Order 13132 does not apply to this rule.

I. Executive Order 13211: Energy Effects

This final rule is not a ''significant energy action'' as defined in Executive Order 13211, ''Actions Concerning Regulations That Significantly Affect Energy Supply, Distribution, or Use'' (66 FR 28355, May 22, 2001) because it is not likely to have a significant adverse effect on the supply, distribution, or use of energy. As described in the 2000 final rule in which we affirmed the 2004 standard (65 FR 59896, Oct. 6, 2000), we have concluded that there would be no net long-term change in the fuel consumption performance of heavy-duty diesel engines as a result of the 2004 model year emission standards. However, there may be the potential for higher fuel consumption rates in the short term as diesel engine manufacturers work to balance the inherent tradeoff between control of NO_X emissions and fuel consumption. The availability of NCPs for the 2004 and later model years provides manufacturers with another option for balancing this tradeoff and working towards optimizing fuel consumption and emissions—they would be able to use NCPs to emit somewhat higher NO_X levels than they would otherwise be allowed, while at the same time avoiding undesirable fuel consumption impacts. Thus, we have concluded that this final rule is not likely to have any significant adverse energy effects.

J. Congressional Review Act

The Congressional Review Act, 5 U.S.C. 801 *et seq.*, as added by the Small Business Regulatory Enforcement Fairness Act of 1996, generally provides that before a rule may take effect, the agency promulgating the rule must submit a rule report, which includes a copy of the rule, to each House of the Congress and to the Comptroller General of the United States. EPA will submit a report containing this rule and other required information to the U.S. Senate, the U.S. House of Representatives, and the Comptroller General of the United States prior to publication of the rule in the **Federal Register**. A ''major rule'' cannot take effect until 60 days after it is published in the **Federal Register**. This action is not a ''major rule'' as defined by 5 U.S.C. 804(a).

List of Subjects in 40 CFR Part 86

Environmental protection, Administrative practice and procedure, Confidential business information, Motor vehicle pollution, Reporting and recordkeeping requirements.

Dated: August 1, 2002.

Christine Todd Whitman,

Administrator.

For the reasons set forth in the preamble, chapter I, title 40 of the Code of Federal Regulations is amended as follows:

PART 86—CONTROL OF EMISSIONS FROM NEW AND IN-USE HIGHWAY VEHICLES AND ENGINES

1. The authority citation for part 86 continues to read as follows:

Authority: 42 U.S.C. 7401—7521(l) and 7521(m)—7671q.

2. Section 86.1105–87 is amended by revising paragraph (e) and by adding paragraph (i), to read as follows:

§ 86.1105–87 Emission standards for which nonconformance penalties are available.

* * * * *

(e) The values of COC_{50}, COC_{90}, and MC_{50} in paragraphs (a) and (b) of this section are expressed in December 1984 dollars. The values of COC_{50}, COC_{90}, and MC_{50} in paragraphs (c) and (d) of this section are expressed in December 1989 dollars. The values of COC_{50}, COC_{90}, and MC_{50} in paragraph (f) of this section are expressed in December 1991 dollars. The values of COC_{50}, COC_{90}, and MC_{50} in paragraphs (g) and (h) of this section are expressed in December 1994 dollars. The values of COC_{50}, COC_{90}, and MC_{50} in paragraph (i) of this section are expressed in December 2001 dollars. These values shall be adjusted for inflation to dollars as of January of the calendar year preceding the model year in which the NCP is first available by using the change in the overall Consumer Price Index, and rounded to the nearest whole dollar in accordance with ASTM E29–67 (reapproved 1980), Standard Recommended Practice for Indicating Which Places of Figures are to be Considered Significant in Specified Limiting Values. The method was approved by the Director of the Federal Register in accordance with 5 U.S.C. 552(a) and 1 CFR part 51. This document is available from ASTM International, 100 Barr Harbor Drive, P.O. Box C700, West Conshohocken, PA 19428–2959, and is also available for inspection as part of Docket A–91–06, located at the Central Docket Section, EPA, 401 M Street, SW., Washington, DC or at the Office of the Federal Register, 800 North Capitol Street, NW., suite 700, Washington, DC. This incorporation by reference was approved by the Director of the Federal Register on January 13, 1992. These materials are incorporated as they exist on the date of the approval and a notice of any change in these materials will be published in the **Federal Register**.

* * * * *

(i) Effective in the 2004 model year, NCPs will be available for the following emission standard:

(1) Diesel heavy-duty engine non-methane hydrocarbon plus oxides of nitrogen standard of 2.4 grams per brake horsepower-hour (or alternatively, 2.5 grams per brake horsepower-hour with a limit on non-methane hydrocarbon emissions of 0.5 grams per brake horsepower-hour), in § 86.004–11(a)(1)(i).

(i) For light heavy-duty diesel engines:

(A) The following values shall be used to calculate an NCP in accordance with § 86.1113–87(a):

(*1*) COC_{50}: $1,240.

(*2*) COC_{90}: $2,710.

(*3*) MC_{50}: $2,000 per gram per brake horsepower-hour.

(*4*) F: 1.3.

(*5*) UL: 4.5 grams per brake horsepower-hour; notwithstanding § 86.1104–91.

(B) The following factor shall be used to calculate the engineering and development component of the NCP for the standard set forth in § 86.004–11(a)(1)(i) in accordance with § 86.1113–87(h): 0.403.

(ii) For medium heavy-duty diesel engines:

(A) The following values shall be used to calculate an NCP in accordance with § 86.1113–87(a):

(*1*) COC_{50}: $2,740.
(*2*) COC_{90}: $4,930.
(*3*) MC_{50}: $1,400 per gram per brake horsepower-hour.
(*4*) F: 1.3.
(*5*) UL: 4.5 grams per brake horsepower-hour; notwithstanding § 86.1104–91.

(B) The following factor shall be used to calculate the engineering and development component of the NCP for the standard set forth in § 86.004–11(a)(1)(i) in accordance with § 86.1113–87(h): 0.197.

(iii) For heavy heavy-duty diesel engines:

(A) The following values shall be used to calculate an NCP in accordance with § 86.1113–87(a):
(*1*) COC_{50}: $6,810.
(*2*) COC_{90}: $12,210.
(*3*) MC_{50}: $5,600 per gram per brake horsepower-hour.
(*4*) F: 1.3.
(*5*) UL: 6.0 grams per brake horsepower-hour; notwithstanding § 86.1104–91.

(B) The following factor shall be used to calculate the engineering and development component of the NCP for the standard set forth in § 86.004–11(a)(1)(i) in accordance with § 86.1113–87(h): 0.090.

(iv) For diesel urban bus engines:

(A) The following values shall be used to calculate an NCP in accordance with § 86.1113–87(a):
(*1*) COC_{50}: $3,930.
(*2*) COC_{90}: $6,660.
(*3*) MC_{50}: $3,800 per gram per brake horsepower-hour.
(*4*) F: 1.3.
(*5*) UL: 4.5 grams per brake horsepower-hour; notwithstanding § 86.1104–91.

(B) The following factor shall be used to calculate the engineering and development component of the NCP for the standard set forth in § 86.004–11(a)(1)(i) in accordance with § 86.1113–87(h): 0.155.

(2) [Reserved]

[FR Doc. 02–19981 Filed 8–7–02; 8:45 am]

BILLING CODE 6560–50–P

ENVIRONMENTAL PROTECTION AGENCY

40 CFR Part 271

[FRL–7256–8]

Delaware: Final Authorization of State Hazardous Waste Management Program Revision

AGENCY: Environmental Protection Agency (EPA).

ACTION: Final rule.

SUMMARY: Delaware applied to EPA for final authorization of revisions to its hazardous waste program under the Resource Conservation and Recovery Act (RCRA). EPA has reached a final determination that these changes to the Delaware hazardous waste program satisfy all requirements necessary for final authorization. Thus, with respect to these revisions, EPA is granting final authorization to the State to operate its program subject to the limitations on its authority retained by EPA in accordance with RCRA, including the Hazardous and Solid Waste Amendments of 1984.

EFFECTIVE DATE: Final authorization for the revisions to Delaware's hazardous waste management program shall be effective on August 8, 2002.

FOR FURTHER INFORMATION CONTACT: Lillie Ellerbe, Mailcode 3WC21, RCRA State Programs Branch, U.S. EPA Region III, 1650 Arch Street, Philadelphia, PA 19103–2029, Phone number: (215) 814–5454.

SUPPLEMENTARY INFORMATION:

A. Why are Revisions to State Programs Necessary?

States which have received final authorization from EPA under RCRA section 3006(b), 42 U.S.C. 6926(b), must maintain a hazardous waste program that is equivalent to, consistent with, and no less stringent than the Federal program. As the Federal program changes, States must revise their programs accordingly and ask EPA to authorize the revisions. Revisions to State programs may be necessary when Federal or State statutory or regulatory authority is changed. For example, most commonly, States must revise their programs when EPA promulgates changes to its regulations in 40 Code of Federal Regulations (CFR) parts 124, 260 through 266, 268, 270, 273 and 279.

Delaware received final authorization on June 8, 1984, effective June 22, 1984 (53 FR 23837), to implement a hazardous waste management program in lieu of the Federal Program. EPA subsequently granted authorization for revisions to Delaware's program on August 8, 1996, effective October 7, 1996 (61 FR 41345); August 18, 1998, effective October 19, 1998 (63 FR 44152); and July 12, 2000, effective September 11, 2000 (65 FR 42871).

Please note that in the aforementioned authorization action effective September 11, 2000, Checklist 152 was listed in the program revision summary table. This checklist includes certain import/export provisions for which States cannot receive authorization. While Delaware adopted the provisions listed in Checklist 152, the revisions listed in 40 CFR 262, Subparts E and H, will continue to be administered by EPA.

On January 11, 2002, Delaware submitted to EPA a complete program revision application, in accordance with 40 CFR 271.21, seeking authorization of additional changes to its program. On February 27, 2002, EPA published both an immediate final rule (67 FR 8900–8902) granting Delaware final authorization for these revisions to its federally-authorized hazardous waste program, along with a companion proposed rule announcing EPA's proposal to grant such final authorization (67 FR 8925–8926). EPA announced in both notices that the immediate final rule and the proposed rule were subject to a thirty-day public comment period. The public comment period ended on March 29, 2002. Further, EPA stated in both notices that if it received adverse comments on its intent to authorize Delaware's program revisions that it would (1) withdraw the immediate final rule; (2) proceed with the proposed rule as the basis for the receipt and evaluation of such comments, and (3) subsequently publish a final determination responding to such comments and announce its final decision whether or not to authorize Delaware's program revisions. EPA did receive written comments from two commenters during the public comment period and on April 25, 2002, published a notice withdrawing the immediate final rule (67 FR 20446). Today's action responds to the comments EPA received and publishes EPA's final determination granting Delaware final authorization of its program revisions. Further background on EPA's immediate final rule and its tentative determination to grant authorization to Delaware for its program revisions appears in the aforementioned **Federal Register** notices. The issues raised by the commenters are summarized and responded to as follows.

B. What Were the Comments and Responses to EPA's Proposal?

Both commenters challenged Region III's process for authorizing revisions to Delaware's program in not providing for a public hearing, which, they state, is required by 40 CFR 271.20. EPA disagrees. The regulations relied upon by the commenters apply to initial program authorization, and not, as in the instant matter, to program revisions. Rather, EPA has proceeded in accordance with 40 CFR 271.21 pursuant to which public hearings are not required. On March 4, 1986, at 51 FR 7540–7542, EPA promulgated amendments to 40 CFR 271.21 that eliminated public hearing requirements

for program revisions. In this March 4, 1986 **Federal Register** EPA stated: ''As discussed in the proposal, the new procedures do not require public hearings to be held in conjunction with EPA's authorization decisions. Since there is no legal requirement to provide for hearings on revision decisions and little public interest has been shown to date in attending hearings on initial authorization of State programs, we think the opportunity to provide written comments is adequate. Only one comment was received on the elimination of routine public hearings, and that comment favored the rule change. However, while the regulatory requirement is deleted, a Regional Administrator, in his discretion, could decide to hold a hearing.'' (51 FR 7541).

Consequently, EPA Region III believes it adhered to the governing regulations regarding opportunities for public hearings during the EPA approval process for State program revisions. EPA Region III also believes that due to the nature and limited number of comments received, the opportunity to provide for written comments, in lieu of a public hearing, was an adequate process to obtain public comment.

Both commenters shared a concern about the ''use constituting disposal'' provisions of subpart C of 40 CFR part 266. They appear to have concerns about the provisions of Delaware regulations (which are identical to EPA's) that allow, under certain conditions, ''hazardous wastes,'' like lime-based slag, to be used as a ''fertilizer.'' They argue that Delaware's statute (like RCRA) does not allow the land application of hazardous wastes (beneficial or not) unless it occurs at a permitted disposal facility. For the reasons set forth below, EPA disagrees.

EPA's regulations accommodate the proper reuse, recycling and reclamation of as many resources destined for disposal as possible, while regulating hazardous wastes and hazardous waste residuals that must be discarded.

EPA's regulations at 40 CFR part 266, subpart C, place controls on the management of hazardous wastes before such wastes are made into a fertilizer. Producing fertilizer from an otherwise hazardous waste is a type of recycling which, in EPA's regulations, is referred to as ''use constituting disposal.'' Rather than prohibiting the use of waste-derived fertilizers, EPA promulgated regulations to require that hazardous wastes that are going to be made into fertilizers be managed in accordance with all applicable hazardous waste management requirements until the wastes are actually made into a fertilizer.

With regard to the ''use constituting disposal'' provisions of 40 CFR part 266—subpart C, in the context of fertilizer applications, these provisions in Delaware's program were authorized by EPA as part of Delaware's first program revision, which took effect on October 7, 1996—over five years ago. As is Delaware's practice, Delaware adopted EPA's rules verbatim. Therefore, in the State's revision authorization application, Delaware claimed its rules were equivalent to EPA's.

Delaware's current revision application, for which EPA recently published its tentative approval, with an opportunity for public comment, does not include any regulatory revisions to 40 CFR part 266—subpart C. Since the comment EPA has received on ''use constituting disposal'' is not part of Delaware's most recent program revision application, EPA believes the public comments on ''use constituting disposal'' are not within the scope of this Agency action.

One commenter raised a third issue and claimed that Delaware's EPA-delegated National Pollutant Discharge Elimination System (NPDES) program is not being effectively carried out. The commenter questioned why EPA would grant additional hazardous waste management authority to a State agency that is allegedly not performing well in another program area. EPA has determined that there is no basis in 40 CFR part 271 that requires EPA to evaluate the effectiveness of any other environmental program's management in Delaware before authorizing revisions to Delaware's hazardous waste program. Based on EPA's oversight of Delaware's hazardous waste program over the years, EPA has determined that DNREC implements an effective hazardous waste program, and EPA sees no reason not to proceed with authorizing Delaware's hazardous waste program revisions.

C. What Decisions Have We Made in This Rule?

Based on EPA's response to public comments, the Agency has determined that approval of Delaware's RCRA program revisions should proceed. EPA has made a final determination that Delaware's application to revise its authorized program meets all of the statutory and regulatory requirements established by RCRA. Therefore, we grant Delaware final authorization to operate its hazardous waste program with the changes described in its application for program revisions. Delaware has responsibility for permitting Treatment, Storage, and Disposal Facilities (TSDFs) within its borders and for carrying out the aspects of the RCRA program described in its application, subject to the limitations of the Hazardous and Solid Waste Amendments of 1984 (HSWA). New Federal requirements and prohibitions imposed by Federal regulations that EPA promulgates under the authority of HSWA take effect in authorized States before they are authorized for the requirements. Thus, EPA will implement any such HSWA requirements and prohibitions in Delaware, including issuing HSWA permits, until the State is granted authorization to do so.

For further background on the scope and effect of today's action to approve Delaware's RCRA program revisions, please refer to the preambles of EPA's February 27, 2002 proposed and immediate final rules to grant authorization to Delaware for its program revisions, at 67 FR 8925–8926 and 67 FR 8900–8902, respectively.

D. Administrative Requirements

The Office of Management and Budget has exempted this action from the requirements of Executive Order 12866 (58 FR 51735, October 4, 1993); therefore, this action is not subject to review by OMB. This action authorizes State requirements for the purpose of RCRA 3006 and imposes no additional requirements beyond those imposed by State law. Accordingly, I certify that this action will not have a significant economic impact on a substantial number of small entities under the Regulatory Flexibility Act (5 U.S.C. 601 *et seq.*). Because this action authorizes pre-existing requirements under State law and does not impose any additional enforceable duty beyond that required by State law, it does not contain any unfunded mandate or significantly or uniquely affect small governments, as described in the Unfunded Mandates Reform Act of 1995 (Public Law 104–4). For the same reason, this action does not have tribal implications within meaning of Executive Order 13175 (65 FR 68249, November 6, 2000). This action does not have substantial direct effects on tribal governments, on the relationship between the Federal government and the Indian tribes, or on the distribution of power and responsibilities between the Federal government and Indian tribes, as specified in Executive Order 13175. This action will not have substantial direct effects on the States, on the relationship between the national government and the States, or on the distribution of power and responsibilities among the various

levels of government, as specified in Executive Order 13132 (64 FR 43255, August 10, 1999), because it merely authorizes State requirements as part of the State RCRA hazardous waste program without altering the relationship or the distribution of power and responsibilities established by RCRA. This action also is not subject to Executive Order 13045 (62 FR 19885, April 23, 1997) because it is not economically significant and does not make decisions based on environmental health or safety risks. This rule is not subject to Executive Order 13211, ''Actions Concerning Regulations That Significantly Affect Energy Supply, Distribution, or Use'' (66 FR 28355 (May 22, 2001)) because it is not a significant regulatory action under Executive Order 12866.

Under RCRA 3006(b), EPA grants a State's application for authorization as long as the State meets the criteria required by RCRA. It would thus be inconsistent with applicable law for EPA, when it reviews a State authorization application, to require the use of any particular voluntary consensus standard in place of another standard that otherwise satisfies the requirements of RCRA. Thus, the requirements of section 12(d) of the National Technology Transfer and Advancement Act of 1995 (15 U.S.C. 272 note) do not apply. As required by section 3 of Executive Order 12988 (61 FR 4729, February 7, 1996), in issuing this rule, EPA has taken the necessary steps to eliminate drafting errors and ambiguity, minimize potential litigation, and provide a clear legal standard for affected conduct. EPA has complied with Executive Order 12630 (53 FR 8859, March 15, 1998) by examining the takings implications of the rule in accordance with the Attorney General's ''Supplemental Guidelines for the Evaluation of Risk and Avoidance of Unanticipated Takings' issued under the executive order. This rule does not impose an information collection burden under the provisions of the Paperwork Reduction Act of 1995 (44 U.S.C. 3501 *et seq.*).

The Congressional Review Act, 5 U.S.C. 801 *et seq.*, as added by the Small Business Regulatory Enforcement Fairness Act of 1996, generally provides that before a rule may take effect, the agency promulgating the rule must submit a rule report, which includes a copy of the rule, to each House of the Congress and to the Comptroller General of the United States. EPA will submit a report containing this document and other required information to the U.S. Senate, the U.S. House of Representatives, and the Comptroller General of the United States prior to publication in the **Federal Register**. A major rule cannot take effect until 60 days after it is published in the **Federal Register**. This action is not a ''major rule'' as defined by 5 U.S.C. 804(2). This action will be effective on August 8, 2002.

List of Subjects in 40 CFR Part 271

Environmental protection, Administrative practice and procedure, Confidential business information, Hazardous waste, Hazardous waste transportation, Indian lands, Intergovernmental relations, Penalties, Reporting and recordkeeping requirements.

Authority: This action is issued under the authority of sections 2002(a), 3006 and 7004(b) of the Solid Waste Disposal Act as amended 42 U.S.C. 6912(a), 6926, 6974(b).

Dated: August 1, 2002.

Donald S. Welsh,

Regional Administrator, Region III.

[FR Doc. 02–20096 Filed 8–7–02; 8:45 am]

BILLING CODE 6560–50–P

DEPARTMENT OF TRANSPORTATION

Transportation Security Administration

49 CFR 1503

[Docket No. TSA–2002–12777]

RIN 2110–AA09

Investigative and Enforcement Procedures

AGENCY: Transportation Security Administration (TSA), DOT.

ACTION: Interim final rule.

SUMMARY: This rulemaking establishes the interim investigative and enforcement procedural rules that the TSA will use to address statutory and regulatory violations. It adopts, in large part, the Federal Aviation Administration's (FAA) investigative and enforcement procedures. In addition, this rulemaking adopts the FAA's adjustment of civil penalties for inflation.

DATES: This rule is effective August 8, 2002.

FOR FURTHER INFORMATION CONTACT: Quang Nguyen, Civil Enforcement Division, Office of the Chief Counsel (TSA–2), Transportation Security Administration, 400 Seventh Street, SW., Washington, DC 20590; telephone (202) 493–1233; or e-mail: *quang.nguyen@tsa.dot.gov*.

SUPPLEMENTARY INFORMATION:

Availability of Final Rule

You can get an electronic copy using the Internet by taking the following steps:

(1) Go to search function of the Department of Transportation's electronic Docket Management System (DMS) Web page (*http://dms.dot.gov/search*).

(2) On the search page type in the last digits of the docket number shown at the beginning of this notice. Click on ''search.''

(3) On the next page that contains the docket summary information for the docket you selected, click on the final rule.

You can also get an electronic copy using the Internet through the Government Printing Office's web page at *http://www.access.gpo.gov/su_docs/aces/aces140html*.

In addition, copies are available by writing the Transportation Security Administration, Attention: Enforcement Docket, Office of the Chief Counsel (TSA–2); 400 Seventh Street, SW., Washington, DC 20590. Such requests should identify the docket number of this rulemaking.

Abbreviations and Terms Used in This Document

ATSA—Aviation and Transportation Security Act
FSD—Federal Security Director
SSI—Sensitive Security Information
TSA—Transportation Security Administration
Under Secretary—The Under Secretary of Transportation for Security

Background

On November 19, 2001, the Aviation and Transportation Security Act (ATSA) (Public Law 107–71) became law. ATSA created the TSA, and transferred most aviation security functions from the FAA to the TSA. With some modifications, the civil aviation security rules have been transferred from the FAA (in title 14, Code of Federal Regulations) to the TSA (in title 49, Code of Federal Regulations) in a separate rulemaking (see docket number TSA–2002–11602). 67 FR 8340 (February 22, 2002). Under ATSA, the Under Secretary of Transportation for Security may impose a civil penalty for certain statutory violations of 49 U.S.C. chapter 449 or a regulation prescribed or order issued thereunder.

ATSA section 141 provides that all rules issued by the FAA continue in effect until modified or terminated by the TSA. However, part 13 of the FAA regulations includes references to FAA agency attorneys and the FAA decision

maker that do not apply to the TSA's operations at this time. This action permits TSA personnel to serve as agency attorneys and the Under Secretary to serve as the TSA decision maker under these rules.

Because the TSA currently does not have its own investigatory or enforcement procedures in place, the TSA is adopting, in large part, the current FAA investigative and enforcement rules in part 13 of title 14 of the Code of Federal Regulations. These rules will be used in the interim as the TSA prepares revised investigative and enforcement procedures. Those procedures will be noticed in the **Federal Register** for public comment.

Under ATSA, the TSA is not required to provide administrative hearings on the record. Accordingly, the TSA's enforcement proceedings are not required to comply with the Administrative Procedure Act (APA). Although these interim final rules conform to the APA requirements, the TSA intends to propose new procedures in accordance with its statutory authority. The TSA's decision not to adopt such new procedures in this rulemaking does not limit the TSA's ability to do so in the future.

Current Rulemaking

This rulemaking establishes the interim investigative and enforcement procedural rules that the TSA will use to address violations of 49 U.S.C. chapter 449 and regulations and orders issued thereunder. This rule is being issued as an interim final rule. As a rule of agency practice and procedure, this rule is exempt from the prior notice and comment requirement under 4(b)(3)(A) of the Administrative Procedure Act (APA), 5 U.S.C. 553(b)(3)(A). The rule will be codified in 49 CFR part 1503. The rules are largely unchanged from the FAA investigative and enforcement rules found in part 13, Title 14 of the Code of Federal Regulations, except for the following:

1. Omission of FAA procedures or processes where they are inapplicable to or inappropriate or unnecessary for the TSA at this time;
2. Revision of references from FAA to the TSA and a revision of occurrences of ''shall'' to ''must'' or ''will'' where appropriate;
3. Revision of the time period relating to motions to dismiss a request for hearing, decision on motion for disqualification, motion to dismiss for insufficiency, motion to dismiss a complaint, and motions requesting a more definite statement of the allegations;
4. Revision of the effect of filing a petition to reconsider;
5. Revision of the term ''Record;''
6. Revision of the numbering system to reflect the TSA's adoption in part 1503;
7. Revision of ''aviation safety'' to ''transportation safety;''
8. Revision of public access to the enforcement docket;
9. Addition of section addressing requests for portions of the enforcement investigative report (EIR);
10. Revision with regard to filing certain documents with the administrative law judge.

Administrative Changes

Applicable references to FAA were changed to the TSA. Also, because of its potential legal ambiguity, the occurrences of ''shall'' have been revised to ''must'' or ''will'' as appropriate. Additionally, other administrative changes have been made to clarify, without substantively changing, the language of the rule.

Time Periods

In the interests of equity and practicality, the time periods provided in 49 CFR 1503.218(f)(2)(i) and 49 CFR 1503.218(f)(6)(iii) are both revised from their FAA counterparts. In 49 CFR 1503.218(f)(2)(i), the time for filing a complaint after service of an order denying a motion to dismiss is extended from ''10 days'' to ''20 days.'' Likewise, if required by the decision on appeal, the time period for filing a complaint and service on a party is also extended from ''10 days'' to ''20 days.'' Further, in 49 CFR 1503.218(f)(6)(iii), the requirement for an administrative law judge to render a decision on the motion for disqualification is extended from ''15 days'' to ''20 days.'' In addition, the time period provided for respondents to file an answer upon a denial of a motion to dismiss for insufficiency (1503.218(f)(1)), a denial of a motion to dismiss a complaint (1503.218(f)(2)(ii)), and denial of a motion requesting a more definite statement of the allegations is revised from ''10 days'' to ''20 days'' (1503.218(f)(3)(i)).

Effect of Filing Petition to Reconsider

Under 14 CFR 13.234(f), filing a petition to reconsider does not stay the effective date of a final decision and order and does not toll the time for filing a petition for review in a United States court of appeals. Under TSA rules, the filing of a petition for reconsideration or modification will stay the effective date of the order and a person may seek judicial review of a final order of the Under Secretary, which is embodied in a final decision and order, and if applicable, an order on a petition for modification or reconsideration. Corresponding changes are made to section 1503.235 to reflect the changes.

Expansion of the Term ''Record''

Due to an apparent oversight, the FAA rules did not include the request for hearing and the pleadings as part of the official record. Section 1503.230(a) includes the request for hearing, the complaint, and the answer in the list of documents making up the exclusive record.

Numbering System

Although the FAA part numbers of this rule are replaced with a corresponding TSA part number, we have retained each section number of the previous FAA rule where applicable. For instance, if an FAA section was previously numbered ''13.201,'' it is now numbered ''1503.201.''

''Aviation Safety'' to ''Transportation Safety''

Where applicable, in those instances that 49 CFR part 13 refers to aviation safety, the current rulemaking replaces ''aviation safety'' with ''transportation safety'' (for instance, §§ 1503.226(b) and 1503.233(j)(4)). This change reflects the TSA's broader mission relating to the various modes of transportation.

Public Access to the Enforcement Docket

Sensitive Security Information (SSI) is a category of protected material that is defined under 49 CFR part 1520. SSI material is exempted from disclosure under FOIA. Because of the nature of SSI material and the high concentration of such material in the enforcement actions that the TSA will handle, this rulemaking procedurally limits public access to the TSA enforcement docket. Under revised 49 CFR 1503.230(b), interested members of the public may examine and copy parts of the docket by filing a request under FOIA, 5 U.S.C. 552. This rulemaking is not intended to preclude members of the public from access to the enforcement docket, but is designed to prevent the improper disclosure of SSI.

Addition of section addressing requests for portions of the EIR

Under the new section 49 CFR 1503.12, any alleged violator or designated representative may request portions of the enforcement investigative report (EIR). Any requests by an alleged violator or designated

representative for non-privileged portions of the EIR need not be made under FOIA, but may be made pursuant to this section. Any other individual interested in obtaining a copy of the EIR must still submit a FOIA request.

Filing with the Enforcement Docket Clerk

The rules of practice under 14 CFR part 13 provided that certain documents be filed with the administrative law judge, and this may have caused some confusion in the past. Under this rulemaking, all documents required to be filed must be filed in one place, i.e., with the Enforcement Docket Clerk. The parties must serve a copy on the administrative law judge, or on the chief administrative law judge if no judge has been assigned to the case. This will enable the Enforcement Docket Clerk to maintain a complete set of records for each case and keep the administrative law judge apprised of various requests, amendments, motions and notices.

Good Cause for Immediate Adoption

This action adopts agency rules of procedure, and therefore a notice of proposed rulemaking is not required under 5 U.S.C. 553. Further, this action in essence adopts an existing FAA rule used up to now for these same types of cases, and therefore imposes few new or different procedures on respondents. This rule is needed so that TSA can enforce its security rules and promote compliance with security requirements. Accordingly, the agency finds that prior notice and public comment is impracticable, unnecessary, and contrary to the public interest.

This action adopts a procedural rule; therefore, it is not subject to the requirement that it be effective not less than 30 days from the date of publication in the **Federal Register**, as provided in 5 U.S.C. 553. Further, respondents receiving notices initiating civil penalties under this rule will receive abundant notice of the procedures to be used.

Paperwork Reduction Act

This rule does not contain any collection of information requirements, as defined by the Paperwork Reduction Act of 1995, as amended.

Regulatory Evaluation

Changes to Federal regulations are required to undergo several economic analyses. First, Executive Order 12866 directs that each Federal agency shall propose or adopt a regulation only upon a reasoned determination that the benefits of the intended regulation justify its costs. Second, the Regulatory Flexibility Act of 1980 requires agencies to analyze the economic effect of regulatory changes on small entities. Third, the Office of Management and Budget directs agencies to assess the effect of regulatory changes on international trade. In conducting these analyses, the TSA has determined that this rule is not a ''significant regulatory action'' as defined in the Executive Order and the Department of Transportation Regulatory Policies and Procedures. This rule will not have a significant impact on a substantial number of small entities and will not constitute a barrier to international trade. A full regulatory analysis, which includes the identification and evaluation of cost-reducing alternatives to this rule, has not been prepared. Instead, the agency has prepared a more concise analysis of this rule that is presented in the following paragraphs.

This rulemaking provides guidance for the parties as to how civil penalties are imposed. The rules state the procedures for investigations, enforcement actions, for TSA civil penalty actions, and other details of imposing and adjudicating civil penalties.

Costs

There are no costs associated with this rulemaking. The rules do not impose any new economic requirements on the affected parties. The rules provide a framework for investigative and enforcement procedures and options for the respondent to respond to a proposed civil penalty. They also provide procedures used if an administrative law judge hears a matter. These are essentially the same procedures and options as were provided under the FAA rules that formerly applied to security enforcement cases. Respondents are not required to take any additional action based on these rules. Rather, these rules set out in detail for their options, which respondents may choose to take advantage of or not.

Benefits

This rulemaking will result in some unquantified cost savings to the agency and the respondents by making clear what procedures apply in civil penalty cases.

Regulatory Flexibility Determination

The Regulatory Flexibility Act of 1980 establishes ''as a principle of regulatory issuance that agencies shall endeavor, consistent with the objective of the rule and of applicable statutes, to fit regulatory and informational requirements to the scale of the business, organizations, and governmental jurisdictions subject to regulation.'' To achieve that principle, the Act requires agencies to solicit and consider flexible regulatory proposals and to explain the rationale for their actions. The Act covers a wide-range of small entities, including small businesses, not-for-profit organizations, and small governmental jurisdictions.

Agencies must perform a review to determine whether a proposed or final rule will have a significant economic impact on a substantial number of small entities. If the determination is that it will, the agency must prepare a regulatory flexibility analysis as described in the Act.

However, if an agency determines that a proposed or final rule is not expected to have a significant economic impact on a substantial number of small entities, section 605(b) of the 1980 Act provides that the head of the agency may so certify and a regulatory flexibility analysis is not required. The certification must include a statement providing the factual basis for this determination, and the reasoning should be clear.

As discussed above, there are no costs imposed by this rulemaking. There are unquantified benefits associated with this rulemaking. For this reason, the TSA certifies that there is not a significant economic impact on a substantial number of small entities.

International Trade Impact Assessment

The Trade Agreement Act of 1979 prohibits Federal agencies from engaging in any standards or related activities that create unnecessary obstacles to the foreign commerce of the United States. Legitimate domestic objectives, such as safety, are not considered unnecessary obstacles. The statute also requires consideration of international standards and, where appropriate, that they be the basis for U.S. standards. In addition, consistent with the Administration's belief in the general superiority and desirability of free trade, it is the policy of the Administration to remove or diminish to the extent feasible, barriers to international trade, including those barriers affecting the import of foreign goods and services into the United States.

In accordance with the above statute and policy, the TSA has assessed the potential effect of this final rule and has determined that it will not impose any costs on domestic and international entities and thus has a neutral trade impact.

Executive Order 13132, Federalism

The TSA has analyzed this rule under the principles and criteria of Executive Order 13132, Federalism. We determined that this action will not have a substantial direct effect on the States, or the relationship between the national Government and the States, or on the distribution of power and responsibilities among the various levels of government. Therefore, we have determined that this final rule does not have federalism implications.

Unfunded Mandates Reform Act

The Unfunded Mandates Reform Act of 1995, enacted as Public Law 104–4 on March 22, 1995, is intended, among other things, to curb the practice of imposing unfunded Federal mandates on State, local, and tribal governments. Title II of the Act requires each Federal agency to prepare a written statement assessing the effects of any Federal mandate in a proposed or final agency rule that may result in a $100 million or more expenditure (adjusted annually for inflation) in any one year by State, local, and tribal governments, in the aggregate, or by the private sector; such a mandate is deemed to be a ''significant regulatory action.''

The requirements of Title II of the Unfunded Mandates Reform Act of 1995 do not apply when rulemaking actions are taken without the issuance of a notice of proposed rulemaking. Therefore, the TSA has not prepared a statement under the Act.

Environmental Analysis

The TSA has reviewed this action for purposes of the National Environmental Policy Act of 1969 (NEPA) (42 U.S.C. 4321–4347) and has determined that this action will not have a significant effect on the human environment.

Energy Impact

The energy impact of this rule has been assessed in accordance with the Energy Policy and Conservation Act (EPCA), Public Law 94–163, as amended (43 U.S.C. 6362). It has been determined that this rule is not a major regulatory action under the provisions of the EPCA.

Small Entity Inquiries

The Small Business Regulatory Enforcement Fairness Act (SBREFA) of 1996 requires the TSA to comply with small entity requests for information and advice about compliance with statutes and regulations within the TSA's jurisdiction. Any small entity that has a question regarding this document may contact the person listed in ''For Further Information Contact'' for information. Persons can obtain further information regarding SBREFA on the Small Business Administration's web page at *http://www.sba.gov/advo/laws/law_lib.html.*

List of Subjects in 49 CFR Part 1503

Administrative practice and procedure, Investigations, Law enforcement, Penalties, Transportation.

The Amendments

For the reasons set forth in the preamble, the Transportation Security Administration adds a new part 1503 in Title 49, chapter XII, subchapter A, of the Code of Federal Regulations to read as follows:

PART 1503—INVESTIGATIVE AND ENFORCEMENT PROCEDURES

Subpart A—Investigative Procedures

Sec.
1503.1 Reports of violations.
1503.3 Investigations (general).
1503.5 Formal complaints.
1503.7 Records, documents and reports.

Subpart B—Administrative Actions

1503.11 Administrative disposition of certain violations.

Subpart C—Legal Enforcement Actions

1503.12 Request for portions of the enforcement investigative report (EIR).
1503.13 Consent orders.
1503.15 Civil penalties: Civil penalties involving an amount in controversy in excess of $50,000, an in rem action, or injunctive relief.
1503.16. Civil penalties: Civil penalties involving an amount in controversy not exceeding $50,000.
1503.17 [Reserved]
1503.19 [Reserved]
1503.20 [Reserved]
1503.21 Military personnel.
1503.23 [Reserved]
1503.25 Injunctions.
1503.27 [Reserved]
1503.29 Civil penalties: Streamlined enforcement procedures for certain security violations.

Subpart D—[Reserved]

Subpart E—[Reserved]

Subpart F—[Reserved]

Subpart G—Rules of Practice in Transportation Security Administration (TSA) Civil Penalty Actions

1503.201 Applicability.
1503.202 Definitions.
1503.203 Separation of functions.
1503.204 Appearances and rights of parties.
1503.205 Administrative law judges.
1503.206 Intervention.
1503.207 Certification of documents.
1503.208 Complaint.
1503.209 Answer.
1503.210 Filing of documents.
1503.211 Service of documents.
1503.212 Computation of time.
1503.213 Extension of time.
1503.214 Amendment of pleadings.
1503.215 Withdrawal of complaint or request for hearing.
1503.216 Waivers.
1503.217 Joint procedural or discovery schedule.
1503.218 Motions.
1503.219 Interlocutory appeals.
1503.220 Discovery.
1503.221 Notice of hearing.
1503.222 Evidence.
1503.223 Standard of proof.
1503.224 Burden of proof.
1503.225 Offer of proof.
1503.226 Public disclosure of evidence.
1503.227 Expert or opinion witnesses.
1503.228 Subpoenas.
1503.229 Witness fees.
1503.230 Record.
1503.231 Argument before the administrative law judge.
1503.232 Initial decision.
1503.233 Appeal from initial decision.
1503.234 Petition to reconsider or modify a final decision and order of the TSA decision maker on appeal.
1503.235 Judicial review of a final order.

Subpart H—Civil Monetary Penalty Inflation Adjustment

1503.301 Scope and purpose.
1503.303 Definitions.
1503.305 Cost of living adjustments of civil monetary penalties.

Authority: 18 U.S.C. 6002; 28 U.S.C. 2461 (note); 49 U.S.C. 114, 40113–40114, 40119, 44901–44907, 46101–46107, 46109–46110, 46301, 46305, 46311, 46313–46314.

Subpart A—Investigative Procedures

§ 1503.1 Reports of violations.

(a) Any person who knows of a violation of 49 U.S.C. chapter 449 (except sections 44902, 44903(d), 44907(a)–(d)(1)(A), 44907(d)(1)(C)–(f), 44908, and 44909), or a regulation prescribed or order issued under any of those provisions, should report it to appropriate personnel of any TSA office.

(b) Each report made under this section, together with any other information the TSA may have that is relevant to the matter reported, will be reviewed by TSA personnel to determine the nature and type of any additional investigation or enforcement action the TSA will take.

§ 1503.3 Investigations (general).

(a) The Under Secretary may conduct investigations, hold hearings, issue subpoenas, require the production of relevant documents, records, and property, and take evidence and depositions.

(b) For the purpose of investigating alleged violations of 49 U.S.C. chapter 449 (except sections 44902, 44903(d), 44907(a)–(d)(1)(A), 44907(d)(1)(C)–(f),

44908, and 44909), or a regulation prescribed or order issued under any of those provisions, the Under Secretary's authority may be exercised by the various offices for matters within their respective areas for all routine investigations. When the compulsory processes of section 49 U.S.C. 46104 are invoked, the Under Secretary's authority has been delegated to the Chief Counsel, each Deputy Chief Counsel, and in consultation with the Office of the Chief Counsel, the Associate Under Secretary for Aviation Operations, the Associate Under Secretary for Maritime and Land Security, the Associate Under Secretary for Inspections, and each Federal Security Director.

§ 1503.5 Formal complaints.

(a) Any person may file a complaint with the Under Secretary with respect to any act or omission by any person in contravention of any provision of 49 U.S.C. chapter 449 (except sections 44902, 44903(d), 44907(a)–(d)(1)(A), 44907(d)(1)(C)–(f), 44908, and 44909), or a regulation prescribed or order issued under any of those provisions. This section does not apply to complaints against the Under Secretary or employees of the TSA acting within the scope of their employment.

(b) Complaints filed under this section must—

(1) Be submitted in writing and identified as a complaint filed for the purpose of seeking an appropriate order or other enforcement action;

(2) Be submitted to the U.S. Department of Transportation, Transportation Security Administration, Office of the Chief Counsel, TSA–2, Attention: Enforcement Docket, 400 Seventh Street, SW., Washington, DC 20590;

(3) Set forth the name and address, if known, of each person who is the subject of the complaint and, with respect to each person, the specific provisions of the statute or regulation or order that the complainant believes were violated;

(4) Contain a concise but complete statement of the facts relied upon to substantiate each allegation;

(5) State the name, address, and telephone number of the person filing the complaint; and

(6) Be signed by the person filing the complaint or a duly authorized representative.

(c) Complaints that do not meet the requirements of paragraph (b) of this section will be considered reports under § 1503.1.

(d) Complaints that meet the requirements of paragraph (b) of this section will be docketed and a copy mailed to each person named in the complaint.

(e) Any complaint filed against a member of the Armed Forces of the United States acting in the performance of official duties will be referred to the Secretary of the Department concerned for action in accordance with the procedures set forth in § 1503.21.

(f) The person named in the complaint must file an answer within 20 days after service of a copy of the complaint.

(g) After the complaint has been answered or after the allotted time in which to file an answer has expired, the Under Secretary will determine if there are reasonable grounds for investigating the complaint.

(h) If the Under Secretary determines that a complaint does not state facts that warrant an investigation or action, the complaint may be dismissed without a hearing and the reason for the dismissal will be given, in writing, to the person who filed the complaint and the person named in the complaint.

(i) If the Under Secretary determines that reasonable grounds exist, an informal investigation may be initiated. Each person named in the complaint will be advised which official has been delegated the responsibility under § 1503.3(b) for conducting the investigation.

(j) If the investigation substantiates the allegations set forth in the complaint, a notice of proposed order may be issued or other enforcement action taken in accordance with this part.

(k) The complaint and other pleadings and official TSA records relating to the disposition of the complaint are maintained in current docket form in the TSA Enforcement Docket, GSA Building, Room 5008, 301 Seventh Street SW., Washington, DC 20407.

(1) *Generally.* Any person interested in reviewing or obtaining a copy of a record may do so only by submitting a FOIA request under 5 U.S.C. 552 and 49 CFR part 7. Portions of the record may be exempt from disclosure pursuant to FOIA.

(2) *Docket Files or Documents Not for Public Disclosure.* (i) Only the following persons may review docket files or particular documents that are not for public disclosure:

(A) Parties to the proceedings;

(B) Their designated representatives; and

(C) Persons who have a need to know as determined by the Under Secretary.

(ii) Those persons with permission to review these documents or docket files may view the materials at the TSA Enforcement Docket, GSA Building, Room 5008, 301 Seventh Street SW., Washington, DC 20407. Persons with access to these records may have a copy of the records after payment of reasonable costs.

§ 1503.7 Records, documents and reports.

Each record, document, and report that the Transportation Security Regulations require to be maintained, exhibited, or submitted to the Under Secretary may be used in any investigation conducted by the Under Secretary; and, except to the extent the use may be specifically limited or prohibited by the section that imposes the requirement, the records, documents, and reports may be used in any civil penalty action or other legal proceeding.

Subpart B—Administrative Actions

§ 1503.11 Administrative disposition of certain violations.

(a) If it is determined that a violation or an alleged violation of 49 U.S.C. chapter 449 (except sections 44902, 44903(d), 44907(a)–(d)(1)(A), 44907(d)(1)(C)–(f), 44908, and 44909), or a regulation prescribed or order issued under any of those provisions, does not require legal enforcement action, an appropriate official of the TSA may take administrative action in disposition of the case.

(b) An administrative action under this section does not constitute a formal adjudication of the matter, and may be taken by issuing the alleged violator—

(1) A ''Warning Notice'' that recites available facts and information about the incident or condition and indicates that it may have been a violation; or

(2) A ''Letter of Correction'' that confirms the TSA decision in the matter and states the necessary corrective action the alleged violator has taken or agrees to take. If the agreed corrective action is not fully completed, legal enforcement action may be taken.

Subpart C—Legal Enforcement Actions

§ 1503.12 Request for portions of the enforcement investigative report (EIR).

(a) Discovery and pre-litigation disclosure. Pursuant to this section, any alleged violator or designated representative may request, from the Chief Counsel or designee, portions of the EIR that are not privileged (e.g., under the deliberative process, attorney work-product, or attorney-client privileges). This information will be provided for the sole purpose of providing the information necessary to prepare a response to the allegations contained in the legal enforcement

action document. SSI contained in the EIR is released pursuant to 49 CFR part 1520. Information released under this section is not produced under the Freedom of Information Act (FOIA).

(b) Any person not listed in paragraph (a) of this section that is interested in obtaining a copy of the EIR must submit a FOIA request pursuant to 49 U.S.C. 552 and 49 CFR part 7. Portions of the EIR may be exempt from disclosure pursuant to FOIA.

§ 1503.13 Consent orders.

(a) At any time before the issuance of an order under this subpart, the official who issued the notice and the person subject to the notice may agree to dispose of the case by the issuance of a consent order by the official.

(b) A proposal for a consent order, submitted to the official who issued the notice, under this section must include—

(1) A proposed order;

(2) An admission of all jurisdictional facts;

(3) An express waiver of the right to further procedural steps and of all rights to judicial review; and

(4) An incorporation of the notice by reference and an acknowledgment that the notice may be used to construe the terms of the order.

§ 1503.15 Civil penalties: Civil penalties involving an amount in controversy in excess of $ 50,000, an in rem action, or injunctive relief.

(a) Any person who violates any provision of 49 U.S.C. chapter 449 (except sections 44902, 44903(d), 44907(a)–(d)(1)(A), 44907(d)(1)(C)–(f), 44908, and 44909), or a regulation prescribed or order issued under any of those provisions, is subject to a civil penalty of not more than the amount specified for each violation in accordance with 49 U.S.C. 46301, in conformity with the Federal Civil Penalties Inflation Adjustment Act of 1990, 28 U.S.C. 2461 (note), as amended.

(b) The authority of the Under Secretary, under 49 U.S.C. 46301 to propose a civil penalty for a violation of that chapter, or a rule, regulation, or order issued thereunder, and the ability to refer cases to the United States Attorney General, or the delegate of the Attorney General, for prosecution of civil penalty actions proposed by the Under Secretary, involving an amount in controversy in excess of $ 50,000, an in rem action, or suit for injunctive relief, or for collection of an assessed civil penalty, is delegated to the Chief Counsel and the Deputy Chief Counsel for Enforcement.

(c) The Under Secretary may compromise any civil penalty, proposed in accordance with 49 U.S.C. 46301, involving an amount in controversy in excess of $ 50,000, an in rem action, or suit for injunctive relief, prior to referral of the civil penalty action to the United States Attorney General, or the delegate of the Attorney General, for prosecution.

(1) The Under Secretary, through the Chief Counsel or the Deputy Chief Counsel for Enforcement, will send a civil penalty letter to the person charged with a violation of 49 U.S.C. chapter 449 (except sections 44902, 44903(d), 44907(a)–(d)(1)(A), 44907(d)(1)(C)–(f), 44908, and 44909), or a regulation prescribed or order issued under any of those provisions. The civil penalty letter contains a statement of the charges; the applicable law, rule, regulation, or order; the amount of civil penalty that the Under Secretary will accept in full settlement of the action or an offer to compromise the civil penalty.

(2) Not later than 30 days after receipt of the civil penalty letter, the person charged with a violation may present any material or information in answer to the charges to the agency attorney, either orally or in writing, that may explain, mitigate, or deny the violation or that may show extenuating circumstances. The Under Secretary will consider any material or information submitted in accordance with this paragraph (c) to determine whether the person is subject to a civil penalty or to determine the amount for which the Under Secretary will compromise the action.

(3) If the person charged with the violation offers to compromise for a specific amount, that person must send a certified check or money order for that amount to the agency, made payable to the Transportation Security Administration. The Chief Counsel or the Deputy Chief Counsel for Enforcement may accept the certified check or money order or may refuse and return the certified check or money order.

(4) If the offer to compromise is accepted by the Under Secretary, the agency will send a letter to the person charged with the violation stating that the certified check or money order is accepted in full settlement of the civil penalty action.

(5) If the parties cannot agree to compromise the civil penalty action or the offer to compromise is rejected and the certified check or money order submitted in compromise is returned, the Under Secretary may refer the civil penalty action to the United States Attorney General, or the delegate of the Attorney General, to begin proceedings in a United States district court, pursuant to the authority in 49 U.S.C. 46305 to prosecute and collect the civil penalty.

§ 1503.16 Civil penalties: Civil penalties involving an amount in controversy not exceeding $50,000.

(a) *General.* The following penalties apply to persons who violate chapter 449, as specified in subsection (1), of Title 49 of the United States Code:

(1) Any person who violates any provision of 49 U.S.C. chapter 449 (except sections 44902, 44903(d), 44907(a)–(d)(1)(A), 44907(d)(1)(C)–(f), 44908, and 44909), or a regulation prescribed or order issued under any of those provisions is subject to a civil penalty of not more than the amount specified in the chapter or section for each violation in accordance with 49 U.S.C. 46301, in conformity with the Federal Civil Penalties Inflation Adjustment Act of 1990, 28 U.S.C. 2461 (note), as amended.

(2) [Reserved]

(3) [Reserved]

(b) *Orders assessing civil penalty.* An order assessing civil penalty may be issued for a violation described in paragraph (a) of this section, or as otherwise provided by statute, after notice and opportunity for a hearing. A person charged with a violation may be subject to an order assessing civil penalty in the following circumstances:

(1) An order assessing civil penalty may be issued if a person charged with a violation submits or agrees to submit a civil penalty for a violation.

(2) An order assessing civil penalty may be issued if a person charged with a violation does not request a hearing under paragraph (e)(2)(ii) of this section within 15 days after receipt of a final notice of proposed civil penalty.

(3) Unless an appeal is filed in a timely manner, an initial decision or order of an administrative law judge will be considered an order assessing civil penalty if an administrative law judge finds that an alleged violation occurred and determines that a civil penalty, in an amount found appropriate by the administrative law judge, is warranted.

(4) For penalties issued under § 1503.16(a)(1), unless a petition for review is filed with a U.S. court of appeals in a timely manner, a final decision and order of the Under Secretary will be considered an order assessing civil penalty if the TSA decision maker finds that an alleged violation occurred and a civil penalty is warranted.

(c) *Delegation of authority.* The authority of the Under Secretary, under

49 U.S.C. 46301 to initiate and assess civil penalties for a violation under chapter 449, or a rule, regulation, or order issued thereunder, is delegated to the Deputy Chief Counsel for Enforcement. The authority of the Under Secretary to refer cases to the Attorney General of the United States, or the delegate of the Attorney General, for the collection of civil penalties, is delegated to the Chief Counsel and the Deputy Chief Counsel for Enforcement.

(d) *Notice of proposed civil penalty.* A civil penalty action is initiated by sending a notice of proposed civil penalty to the person charged with a violation of 49 U.S.C. chapter 449 (except sections 44902, 44903(d), 44907(a)–(d)(1)(A), 44907(d)(1)(C)–(f), 44908, and 44909), or a regulation prescribed or order issued under any of those provisions. A notice of proposed civil penalty will be sent to the individual charged with a violation or to the president of the corporation or company charged with a violation. In response to a notice of proposed civil penalty, a corporation or company may designate in writing another person to receive documents in that civil penalty action. The notice of proposed civil penalty contains a statement of the charges and the amount of the proposed civil penalty. Not later than 30 days after receipt of the notice of proposed civil penalty, the person charged with a violation must—

(1) Submit the amount of the proposed civil penalty or an agreed-upon amount, in which case either an order assessing civil penalty or compromise order must be issued in that amount;

(2) Submit to the agency attorney one of the following:

(i) Written information, including documents and witness statements, demonstrating that a violation of the regulations did not occur or that a penalty or the amount of the penalty is not warranted by the circumstances;

(ii) A written request to reduce the proposed civil penalty, the amount of reduction, and the reasons and any documents supporting a reduction of the proposed civil penalty, including records indicating a financial inability to pay or records showing that payment of the proposed civil penalty would prevent the person from continuing in business;

(iii) A written request for an informal conference to discuss the matter with the agency attorney and to submit relevant information or documents; or

(3) Request a hearing in which case a complaint will be filed with the Enforcement Docket Clerk.

(e) *Final notice of proposed civil penalty.* A final notice of proposed civil penalty may be issued after participation in informal procedures provided in paragraph (d)(2) of this section or failure to respond in a timely manner to a notice of proposed civil penalty. A final notice of proposed civil penalty will be sent to the individual charged with a violation, to the president of the corporation or company charged with a violation, or a person previously designated in writing by the individual, corporation, or company to receive documents in that civil penalty action. If not previously done in response to a notice of proposed civil penalty, a corporation or company may designate in writing another person to receive documents in that civil penalty action. The final notice of proposed civil penalty contains a statement of the charges and the amount of the proposed civil penalty and, as a result of information submitted to the agency attorney during informal procedures, may modify an allegation or a proposed civil penalty contained in a notice of proposed civil penalty.

(1) A final notice of proposed civil penalty may be issued—

(i) If the person charged with a violation fails to respond to the notice of proposed civil penalty within 30 days after receipt of that notice; or

(ii) If the parties participated in any informal procedures under paragraph (d)(2) of this section and the parties have not agreed to compromise the action or the agency attorney has not agreed to withdraw the notice of proposed civil penalty.

(2) Not later than 15 days after receipt of the final notice of proposed civil penalty, the person charged with a violation must do one of the following—

(i) Submit the amount of the proposed civil penalty or an agreed-upon amount, in which case either an order assessing civil penalty or a compromise order will be issued in that amount; or

(ii) Request a hearing in which case a complaint will be filed with the Enforcement Docket Clerk.

(f) *Request for a hearing.* Any person charged with a violation may request a hearing, pursuant to paragraph (d)(3) or paragraph (e)(2)(ii) of this section, to be conducted in accordance with the procedures in subpart G of this part. A person requesting a hearing must file a written request for a hearing with the Enforcement Docket Clerk (U.S. Department of Transportation, Transportation Security Administration, Office of the Chief Counsel, TSA–2, Attention: Enforcement Docket Clerk, 400 Seventh Street, SW., Washington, DC 20590) and must mail a copy of the request to the agency attorney. The person requesting the hearing must date and sign the request, and must include his or her current address. The request for hearing must be typewritten or legibly written.

(g) Hearing. If the person charged with a violation requests a hearing pursuant to paragraph (d)(3) or paragraph (e)(2)(ii) of this section, the original complaint will be filed with the Enforcement Docket Clerk and a copy will be sent to the person requesting the hearing. The procedural rules in subpart G of this part apply to the hearing and any appeal. At the close of the hearing, the administrative law judge will issue, either orally on the record or in writing, an initial decision, including the reasons for the decision, that contains findings or conclusions on the allegations contained, and the civil penalty sought, in the complaint.

(h) *Appeal.* Either party may appeal the administrative law judge's initial decision to the TSA decision maker pursuant to the procedures in subpart G of this part. If a party files a notice of appeal pursuant to § 1503.233, the effectiveness of the initial decision is stayed until a final decision and order of the Under Secretary have been entered on the record. The TSA decision maker will review the record and issue a final decision and order of the Under Secretary that affirms, modifies, or reverses the initial decision. The TSA decision maker may assess a civil penalty but will not assess a civil penalty in an amount greater than that sought in the complaint.

(i) *Payment.* A person must pay a civil penalty by sending, to the agency, a certified check or money order made payable to the Transportation Security Administration.

(j) *Collection of civil penalties.* If a person does not pay a civil penalty imposed by an order assessing civil penalty or a compromise order within 60 days after service of the order, the Under Secretary may refer the order to the United States Attorney General, or the delegate of the Attorney General, to begin proceedings to collect the civil penalty. The action will be brought in a United States district court, pursuant to the authority in 49 U.S.C. 46305.

(k) *Exhaustion of administrative remedies.* For violations of 49 U.S.C. chapter 449 (except sections 44902, 44903(d), 44907(a)–(d)(1)(A), 44907(d)(1)(C)–(f), 44908, and 44909), or a regulation prescribed or order issued under any of those provisions, a party may only petition for review of a final decision and order of the Under Secretary to the courts of appeals of the United States or the United States Court

of Appeals for the District of Columbia pursuant to section 49 U.S.C. 46110. Neither an initial decision or order issued by an administrative law judge that has not been appealed to the TSA decision maker, nor an order compromising a civil penalty action constitutes a final order of the Under Secretary for the purposes of judicial appellate review under 49 U.S.C. 46110.

(l) *Compromise.* The TSA may compromise any civil penalty action initiated in accordance with 49 U.S.C. 46301, involving an amount in controversy not exceeding $ 50,000, or any civil penalty action initiated in accordance with 49 U.S.C. 46301 at any time before referring the action to the United States Attorney for collection.

(1) An agency attorney may compromise any civil penalty action where a person charged with a violation agrees to pay a civil penalty and the TSA agrees to make no finding of violation. Pursuant to such agreement, a compromise order will be issued, stating:

(i) The person agrees to pay a civil penalty;

(ii) The TSA makes no finding of a violation; and

(iii) The compromise order will not be used as evidence of a prior violation in any subsequent civil penalty proceeding.

(2) An agency attorney may compromise the amount of any civil penalty proposed in a notice, assessed in an order, or imposed in a compromise order.

§ 1503.17 [Reserved]

§ 1503.19 [Reserved]

§ 1503.20 [Reserved]

§ 1503.21 Military personnel.

If a report made under this part indicates that, while performing official duties, a member of the Armed Forces, or a civilian employee of the Department of Defense who is subject to the Uniform Code of Military Justice (10 U.S.C. Ch. 47), has violated 49 U.S.C. chapter 449 (except sections 44902, 44903(d), 44907(a)–(d)(1)(A), 44907(d)(1)(C)–(f), 44908, and 44909), or a regulation prescribed or order issued under any of those provisions, the Chief Counsel or the Deputy Chief Counsel for Enforcement will send a copy of the report to the appropriate military authority for such disciplinary action as that authority considers appropriate and a report to the Under Secretary thereon.

§ 1503.23 [Reserved]

§ 1503.25 Injunctions.

Whenever it is determined that a person has engaged, or is about to engage, in any act or practice constituting a violation of 49 U.S.C. chapter 449 (except sections 44902, 44903(d), 44907(a)–(d)(1)(A), 44907(d)(1)(C)–(f), 44908, and 44909), or a regulation prescribed or order issued under any of those provisions for which the TSA exercises enforcement responsibility, the Chief Counsel or the Deputy Chief Counsel for Enforcement may request the United States Attorney General, or the delegate of the Attorney General, to bring an action in the appropriate United States district court for such relief as is necessary or appropriate, including mandatory or prohibitive injunctive relief, interim equitable relief, and punitive damages, as provided by 49 U.S.C. 46107.

§ 1503.27 [Reserved]

§ 1503.29 Civil penalties: Streamlined enforcement procedures for certain security violations.

This section may be used, at the agency's discretion, in enforcement actions involving individuals presenting dangerous or deadly weapons for screening at airports or in checked baggage where the amount of the proposed civil penalty is less than $5,000. In these cases, §§ 1503.16(a), 1503.16(c), and 1503.16 (f) through (l) are used, as well as paragraphs (a) through (d) of this section:

(a) *Delegation of authority.* The authority of the Under Secretary, under 49 U.S.C. 46301, to initiate civil penalty actions in accordance with TSA policies and procedures promulgated pursuant to 49 U.S.C. 46301 et seq. and 49 CFR part 1540, is delegated to each Federal Security Director for the purpose of issuing notices of violation in cases involving violations of 49 U.S.C. chapter 449, or a regulation prescribed or order issued under any of those provisions.

(b) *Notice of violation.* A civil penalty action is initiated by sending a notice of violation to the person charged with the violation. The notice of violation contains a statement of the charges and the amount of the proposed civil penalty. Not later than 30 days after receipt of the notice of violation, the person charged with a violation must:

(1) Submit the amount of the proposed civil penalty or an agreed-upon amount, in which case either an order assessing a civil penalty or a compromise order will be issued in that amount; or

(2) Submit to the agency attorney identified in the material accompanying the notice any of the following:

(i) Written information, including documents and witness statements, demonstrating that a violation of the regulations did not occur or that a penalty or the penalty amount is not warranted by the circumstances; or

(ii) A written request to reduce the proposed civil penalty, the amount of reduction, and the reasons and any documents supporting a reduction of the proposed civil penalty, including records indicating a financial inability to pay or records showing that payment of the proposed civil penalty would prevent the person from continuing in business; or

(iii) A written request for an informal conference to discuss the matter with an agency attorney and submit relevant information or documents; or

(3) Request a hearing in which case a complaint will be filed with the Enforcement Docket Clerk.

(c) *Final notice of violation and civil penalty assessment order.* A final notice of violation and civil penalty assessment order (''final notice and order'') may be issued after participation in any informal proceedings as provided in paragraph (b)(2) of this section, or after failure of the respondent to respond in a timely manner to a notice of violation. A final notice and order will be sent to the individual charged with a violation. The final notice and order will contain a statement of the charges and the amount of the proposed civil penalty and, as a result of information submitted to the agency attorney during any informal procedures, may reflect a modified allegation or proposed civil penalty. A final notice and order may be issued—

(1) If the person charged with a violation fails to respond to the notice of violation within 30 days after receipt of that notice; or

(2) If the parties participated in any informal procedures under paragraph (b)(2) of this section and the parties have not agreed to compromise the action or the agency attorney has not agreed to withdraw the notice of violation.

(d) *Order assessing civil penalty.* An order assessing civil penalty may be issued after notice and opportunity for a hearing. A person charged with a violation may be subject to an order assessing civil penalty in the following circumstances:

(1) An order assessing civil penalty may be issued if a person charged with a violation submits, or agrees to submit, the amount of civil penalty proposed in the notice of violation.

(2) An order assessing civil penalty may be issued if a person charged with a violation submits, or agrees to submit, an agreed-upon amount of civil penalty that is not reflected in either the notice of violation or the final notice and order.

(3) The final notice and order becomes (and contains a statement so indicating) an order assessing a civil penalty when the person charged with a violation submits the amount of the proposed civil penalty that is reflected in the final notice and order.

(4) The final notice and order becomes (and contains a statement so indicating) an order assessing a civil penalty 16 days after receipt of the final notice and order, unless not later than 15 days after receipt of the final notice and order, the person charged with a violation does one of the following—

(i) Submits an agreed-upon amount of civil penalty that is not reflected in the final notice and order, in which case an order assessing civil penalty or a compromise order will be issued in that amount; or

(ii) Requests a hearing in which case a complaint will be filed with the Enforcement Docket Clerk.

(5) Unless there is an appeal to the TSA decision maker, filed in a timely manner, an initial decision or order of an administrative law judge will be considered an order assessing civil penalty if an administrative law judge finds that an alleged violation occurred and determines that a civil penalty, in an amount found to be appropriate by the administrative law judge, is warranted.

(6) Unless a petition for review is filed with a U.S. court of appeals in a timely manner, a final decision and order of the Under Secretary will be considered an order assessing civil penalty if the TSA decision maker finds that an alleged violation occurred and a civil penalty is warranted.

Subpart D—[Reserved]

Subpart E—[Reserved]

Subpart F—[Reserved]

Subpart G—Rules of Practice in Transportation Security Administration (TSA) Civil Penalty Actions

§ 1503.201 Applicability.

(a) This subpart applies to the following actions:

(1) A civil penalty action in which a request for hearing has been filed and the amount sought does not exceed $50,000 for a violation arising under 49 U.S.C. chapter 449 (except sections 44902, 44903(d), 44907(a)–(d)(1)(A), 44907(d)(1)(C)–(f), 44908, and 44909), or a regulation prescribed or order issued under any of those provisions.

(b) [Reserved]

(c) Notwithstanding the provisions of paragraph (a) of this section, the United States district courts will have exclusive jurisdiction of any civil penalty action initiated by the Under Secretary:

(1) Which involves an amount in controversy in excess of $50,000;

(2) Which is an in rem action or in which an in rem action based on the same violation has been brought;

(3) Regarding which an aircraft subject to lien has been seized by the United States; and

(4) In which a suit for injunctive relief based on the violation giving rise to the civil penalty has also been brought.

§ 1503.202 Definitions.

The following definitions apply to this subpart:

Administrative law judge means an administrative law judge appointed pursuant to the provisions of 5 U.S.C. 3105.

Agency attorney means the Deputy Chief Counsel for Enforcement or an attorney that he or she designates. An *agency attorney* will not include:

(1) Any attorney in the Office of the Chief Counsel who advises the TSA decision maker regarding an initial decision or any appeal to the TSA decision maker; or

(2) Any attorney who is supervised in a civil penalty action by a person who provides such advice to the TSA decision maker in that action or a factually related action.

Attorney means a person licensed by a state, the District of Columbia, or a territory of the United States to practice law or appear before the courts of that state or territory.

Complainant means those persons within the TSA responsible for investigating and bringing possible violations of statute and regulation.

Complaint means a document issued by an agency attorney alleging a violation of 49 U.S.C. chapter 449 (except sections 44902, 44903(d), 44907(a)–(d)(1)(A), 44907(d)(1)(C)–(f), 44908, and 44909), or a regulation prescribed or order issued under any of those provisions that has been filed with the enforcement docket after a hearing has been requested pursuant to § 1503.16(d)(3) or § 1503.16(e)(2)(ii).

Mail includes U.S. certified mail, U.S. registered mail, or use of an overnight express courier service.

Order assessing civil penalty means a document that contains a finding of violation of 49 U.S.C. chapter 449 (except sections 44902, 44903(d), 44907(a)–(d)(1)(A), 44907(d)(1)(C)–(f), 44908, and 44909), or a regulation prescribed or order issued under any of those provisions and may direct payment of a civil penalty. Unless there is an appeal to the TSA decision maker, filed in a timely manner, an initial decision or order of an administrative law judge will be considered an *order assessing civil penalty* if an administrative law judge finds that an alleged violation occurred and determines that a civil penalty, in an amount found appropriate by the administrative law judge, is warranted. Unless a petition for review is filed with a U.S. court of appeals in a timely manner, a final decision and order of the Under Secretary will be considered an *order assessing civil penalty* if the TSA decision maker finds that an alleged violation occurred and a civil penalty is warranted.

Party means the respondent or the complainant.

Personal delivery includes hand-delivery or use of a contract or express messenger service. *Personal delivery* does not include the use of Government interoffice mail service.

Pleading means a complaint, an answer, and any amendment of these documents permitted under this subpart.

Properly addressed means a document that shows an address contained in agency records, a residential, business, or other address submitted by a person on any document provided under this subpart, or any other address shown by other reasonable and available means.

Respondent means a person, corporation, or company named in a complaint.

TSA decision maker means the Under Secretary of Transportation for Security, acting in the capacity of the decision maker on appeal, or any person to whom the Under Secretary has delegated the Under Secretary's decision-making authority in a civil penalty action. As used in this subpart, the *TSA decision maker* is the official authorized to issue a final decision and order of the Under Secretary in a civil penalty action.

§ 1503.203 Separation of functions.

(a) Civil penalty proceedings, including hearings, will be prosecuted by an agency attorney.

(b) An agency employee engaged in the performance of investigative or prosecutorial functions in a civil penalty action must not, in that case or a factually related case, participate or give advice in a decision by the

administrative law judge or by the TSA decision maker on appeal, except as counsel or a witness in the public proceedings.

(c) The Chief Counsel or an attorney not covered by paragraph (b) of this section will advise the TSA decision maker regarding an initial decision or any appeal of a civil penalty action to the TSA decision maker.

§ 1503.204 Appearances and rights of parties.

(a) Any party may appear and be heard in person.

(b) Any party may be accompanied, represented, or advised by an attorney or representative designated by the party and may be examined by that attorney or representative in any proceeding governed by this subpart. An attorney or representative who represents a party may file a notice of appearance in the action, in the manner provided in § 1503.210, and must serve a copy of the notice of appearance on each party, in the manner provided in § 1503.211, before participating in any proceeding governed by this subpart. The attorney or representative must include the name, address, and telephone number of the attorney or representative in the notice of appearance.

(c) Any person may request a copy of a document upon payment of reasonable costs. A person may keep an original document, data, or evidence, with the consent of the administrative law judge, by substituting a legible copy of the document for the record.

§ 1503.205 Administrative law judges.

(a) *Powers of an administrative law judge.* In accordance with the rules of this subpart, an administrative law judge may:

(1) Give notice of, and hold, pre-hearing conferences and hearings;

(2) Administer oaths and affirmations;

(3) Issue subpoenas authorized by law and issue notices of deposition requested by the parties;

(4) Rule on offers of proof;

(5) Receive relevant and material evidence;

(6) Regulate the course of the hearing in accordance with the rules of this subpart;

(7) Hold conferences to settle or to simplify the issues by consent of the parties;

(8) Dispose of procedural motions and requests; and

(9) Make findings of fact and conclusions of law, and issue an initial decision.

(b) *Limitations on the power of the administrative law judge.* The administrative law judge must not issue an order of contempt, award costs to any party, or impose any sanction not specified in this subpart. If the administrative law judge imposes any sanction not specified in this subpart, a party may file an interlocutory appeal of right pursuant to § 1503.219(c)(4). This section does not preclude an administrative law judge from issuing an order that bars a person from a specific proceeding based on a finding of obstreperous or disruptive behavior in that specific proceeding.

(c) *Disqualification.* The administrative law judge may disqualify himself or herself at any time. A party may file a motion, pursuant to § 1503.218(f)(6), requesting that an administrative law judge be disqualified from the proceedings.

§ 1503.206 Intervention.

(a) A person may submit a motion for leave to intervene as a party in a civil penalty action. Except for good cause shown, a motion for leave to intervene must be submitted not later than 10 days before the hearing.

(b) If the administrative law judge finds that intervention will not unduly broaden the issues or delay the proceedings, the administrative law judge may grant a motion for leave to intervene if the person will be bound by any order or decision entered in the action or the person has a property, financial, or other legitimate interest that may not be addressed adequately by the parties. The administrative law judge may determine the extent to which an intervenor may participate in the proceedings.

§ 1503.207 Certification of documents.

(a) *Signature required.* The attorney of record, the party, or the party's representative must sign each document tendered for filing with the Enforcement Docket Clerk, or served on the administrative law judge, the TSA decision maker on appeal, or each party.

(b) *Effect of signing a document.* By signing a document, the attorney of record, the party, or the party's representative certifies that the attorney, the party, or the party's representative has read the document and, based on reasonable inquiry and to the best of that person's knowledge, information, and belief, the document is—

(1) Consistent with the rules in this part;

(2) Warranted by existing law or that a good faith argument exists for extension, modification, or reversal of existing law; and

(3) Not unreasonable or unduly burdensome or expensive, not made to harass any person, not made to cause unnecessary delay, not made to cause needless increase in the cost of the proceedings, or for any other improper purpose.

(c) *Sanctions.* If the attorney of record, the party, or the party's representative signs a document in violation of this section, the administrative law judge or the TSA decision maker, as appropriate, will:

(1) Strike the pleading signed in violation of this section;

(2) Strike the request for discovery or the discovery response signed in violation of this section and preclude further discovery by the party;

(3) Deny the motion or request signed in violation of this section;

(4) Exclude the document signed in violation of this section from the record;

(5) Dismiss the interlocutory appeal and preclude further appeal on that issue by the party who filed the appeal until an initial decision has been entered on the record; or

(6) Dismiss the appeal of the administrative law judge's initial decision to the TSA decision maker.

§ 1503.208 Complaint.

(a) *Filing.* The agency attorney must file the original and one copy of the complaint with the Enforcement Docket Clerk, or may file a written motion pursuant to § 1503.218(f)(2)(i) instead of filing a complaint, not later than 20 days after receipt by the agency attorney of a request for hearing. The agency attorney should suggest a location for the hearing when filing the complaint.

(b) *Service.* An agency attorney must personally deliver or mail a copy of the complaint to the respondent, the president of the corporation or company named as a respondent, or a person designated by the respondent to accept service of documents in the civil penalty action.

(c) *Contents.* A complaint must set forth the facts alleged, any regulation allegedly violated by the respondent, and the proposed civil penalty in sufficient detail to provide notice of any factual or legal allegation and proposed civil penalty.

(d) [Reserved]

§ 1503.209 Answer.

(a) *Writing required.* A respondent must file a written answer to the complaint, or may file a written motion pursuant to § 1503.218(f)(1)-(4) instead of filing an answer, not later than 30 days after service of the complaint. The answer may be in the form of a letter but must be dated and signed by the person responding to the complaint. An answer may be typewritten or may be legibly handwritten.

(b) *Filing and address.* A person filing an answer must personally deliver or mail the original and one copy of the answer for filing with the Enforcement Docket Clerk, not later than 30 days after service of the complaint. Filing must be made by mail to the ?U.S. Department of Transportation, Transportation Security Administration, Office of the Chief Counsel, TSA–2, Attention: Enforcement Docket Clerk, 400 Seventh Street, SW., Washington, DC 20590 or by personal delivery to TSA Enforcement Docket, GSA Building Room 5008, 301 D Street SW., Washington, DC 20407. The person filing an answer should suggest a location for the hearing when filing the answer.

(c) *Service.* A person filing an answer must serve a copy of the answer on the agency attorney who filed the complaint.

(d) *Contents.* An answer must specifically state any affirmative defense that the respondent intends to assert at the hearing. A person filing an answer may include a brief statement of any relief requested in the answer.

(e) *Specific denial of allegations required.* A person filing an answer must admit, deny, or state that the person is without sufficient knowledge or information to admit or deny, each numbered paragraph of the complaint. Any statement or allegation contained in the complaint that is not specifically denied in the answer may be deemed an admission of the truth of that allegation. A general denial of the complaint is deemed a failure to file an answer.

(f) *Failure to file answer.* A person's failure to file an answer without good cause will be deemed an admission of the truth of each allegation contained in the complaint.

§ 1503.210 Filing of documents.

(a) Address and method of filing. A person tendering a document for filing must personally deliver or mail the signed original and one copy of each document. Filing must be made either by mail to the U.S. Department of Transportation, Transportation Security Administration, Office of the Chief Counsel, TSA–2, Attention: Enforcement Docket Clerk, 400 Seventh Street, SW., Washington, DC 20590 or by personal delivery to TSA Enforcement Docket, GSA Building, Room 5008, 301 D Street SW., Washington, DC 20407. A person must serve a copy of each document on each party in accordance with § 1503.211.

(b) *Date of filing.* A document will be considered to be filed on the date of personal delivery; or if mailed, the mailing date shown on the certificate of service, the date shown on the postmark if there is no certificate of service, or other mailing date shown by other evidence if there is no certificate of service or postmark.

(c) *Form.* Each document must be typewritten or legibly handwritten.

(d) *Contents.* Unless otherwise specified in this subpart, each document must contain a short, plain statement of the facts supporting the person's position and a brief statement of the action requested in the document.

§ 1503.211 Service of documents.

(a) *General.* A person must serve a copy of any document filed with the Enforcement Docket on each party and the administrative law judge or the chief administrative law judge if no judge has been assigned to the proceeding at the time of filing. Service on a party's attorney of record or a party's designated representative is service on the party.

(b) *Type of service.* A person may serve documents by personal delivery or by mail.

(c) *Certificate of service.* A person may attach a certificate of service to a document tendered for filing with the Enforcement Docket Clerk. A certificate of service must consist of a statement, dated and signed by the person filing the document, that the document was personally delivered or mailed to each party on a specific date.

(d) *Date of service.* The date of service will be the date of personal delivery; or if mailed, the mailing date shown on the certificate of service, the date shown on the postmark if there is no certificate of service, or other mailing date shown by other evidence if there is no certificate of service or postmark.

(e) *Additional time after service by mail.* Whenever a party has a right or a duty to act or to make any response within a prescribed period after service by mail, or on a date certain after service by mail, 5 days will be added to the prescribed period.

(f) *Service by the administrative law judge.* The administrative law judge must serve a copy of each document he or she issues including, but not limited to, notices of pre-hearing conferences and hearings, rulings on motions, decisions, and orders, upon each party to the proceedings by personal delivery or by mail.

(g) *Valid service.* A document that was properly addressed, was sent in accordance with this subpart, and that was returned, that was not claimed, or that was refused, is deemed to have been served in accordance with this subpart. The service will be considered valid as of the date and the time that the document was deposited with a contract or express messenger, the document was mailed, or personal delivery of the document was refused.

(h) *Presumption of service.* There will be a presumption of service where a party or a person, who customarily receives mail, or receives it in the ordinary course of business, at either the person's residence or the person's principal place of business, acknowledges receipt of the document.

§ 1503.212 Computation of time.

(a) This section applies to any period of time prescribed or allowed by this subpart, or by notice or order of the administrative law judge.

(b) The date of an act, event, or default, after which a designated time period begins to run, is not included in a computation of time under this subpart.

(c) The last day of a time period is included in a computation of time unless it is a Saturday, Sunday, a legal holiday, or a day on which the enforcement docket is officially closed. If the last day of the time period is a Saturday, Sunday, legal holiday, or a day on which the enforcement docket is officially closed, the time period runs until the end of the next day that is not a Saturday, Sunday, legal holiday, or a day on which the enforcement docket is officially closed.

§ 1503.213 Extension of time.

(a) *Oral requests.* The parties may agree to extend for a reasonable period the time for filing a document under this subpart. If the parties agree, the administrative law judge must grant one extension of time to each party. The party seeking the extension of time must submit a draft order to the administrative law judge to be signed by the administrative law judge and filed with the Enforcement Docket Clerk. The administrative law judge may grant additional oral requests for an extension of time where the parties agree to the extension.

(b) *Written motion.* A party must file a written motion for an extension of time not later than 7 days before the document is due unless good cause for the late filing is shown. The administrative law judge may grant the extension of time if good cause for the extension is shown.

(c) *Failure to rule.* If the administrative law judge fails to rule on a written motion for an extension of time by the date the document was due, the motion for an extension of time is deemed granted for no more than 20 days after the original date the document was to be filed.

§ 1503.214 Amendment of pleadings.

(a) *Filing and service.* A party must file the amendment with the Enforcement Docket Clerk and must serve a copy of the amendment on the administrative law judge and all parties to the proceeding.

(b) *Time.* A party must file an amendment to a complaint or an answer within the following:

(1) Not later than 15 days before the scheduled date of a hearing, a party may amend a complaint or an answer without the consent of the administrative law judge.

(2) Less than 15 days before the scheduled date of a hearing, the administrative law judge may allow amendment of a complaint or an answer only for good cause shown in a motion to amend.

(c) *Responses.* The administrative law judge must allow a reasonable time, but not more than 20 days from the date of filing, for other parties to respond if an amendment to a complaint, answer, or other pleading has been filed with the administrative law judge.

§ 1503.215 Withdrawal of complaint or request for hearing.

At any time before or during a hearing, an agency attorney may withdraw a complaint or a respondent may withdraw a request for a hearing without the consent of the administrative law judge. If an agency attorney withdraws the complaint or a party withdraws the request for a hearing and the answer, the administrative law judge must dismiss the proceedings under this subpart with prejudice.

§ 1503.216 Waivers.

Waivers of any rights provided by statute or regulation must be in writing or by stipulation made at a hearing and entered into the record. The parties must set forth the precise terms of the waiver and any conditions.

§ 1503.217 Joint procedural or discovery schedule.

(a) *General.* The parties may agree to submit a schedule for filing all prehearing motions, a schedule for conducting discovery in the proceedings, or a schedule that will govern all pre-hearing motions and discovery in the proceedings.

(b) *Form and content of schedule.* If the parties agree to a joint procedural or discovery schedule, one of the parties must file the joint schedule with the administrative law judge, setting forth the dates to which the parties have agreed, and must serve a copy of the joint schedule on each party.

(1) The joint schedule may include, but need not be limited to, requests for discovery, any objections to discovery requests, responses to discovery requests to which there are no objections, submission of pre-hearing motions, responses to pre-hearing motions, exchange of exhibits to be introduced at the hearing, and a list of witnesses that may be called at the hearing.

(2) Each party must sign the original joint schedule to be filed with the Enforcement Docket Clerk.

(c) *Time.* The parties may agree to submit all pre-hearing motions and responses and may agree to close discovery in the proceedings under the joint schedule within a reasonable time before the date of the hearing, but not later than 15 days before the hearing.

(d) *Order establishing joint schedule.* The administrative law judge must approve the joint schedule filed by the parties. One party must submit a draft order establishing a joint schedule to the administrative law judge to be signed by the administrative law judge and filed with the Enforcement Docket Clerk.

(e) *Disputes.* The administrative law judge must resolve disputes regarding discovery or disputes regarding compliance with the joint schedule as soon as possible so that the parties may continue to comply with the joint schedule.

(f) *Sanctions for failure to comply with joint schedule.* If a party fails to comply with the administrative law judge's order establishing a joint schedule, the administrative law judge may direct that party to comply with a motion or discovery request or, limited to the extent of the party's failure to comply with a motion or discovery request, the administrative law judge may:

(1) Strike that portion of a party's pleadings;

(2) Preclude pre-hearing or discovery motions by that party;

(3) Preclude admission of that portion of a party's evidence at the hearing; or

(4) Preclude that portion of the testimony of that party's witnesses at the hearing.

§ 1503.218 Motions.

(a) *General.* A party applying for an order or ruling not specifically provided in this subpart must do so by motion. A party must comply with the requirements of this section when filing a motion. A party must serve a copy of each motion on each party.

(b) *Form and contents.* A party must state the relief sought by the motion and the particular grounds supporting that relief. If a party has evidence in support of a motion, the party must attach any supporting evidence, including affidavits, to the motion.

(c) *Filing of motions.* A motion made prior to the hearing must be in writing or orally on the record. Unless otherwise agreed by the parties or for good cause shown, a party must file any prehearing motion, and must serve a copy on each party, not later than 30 days before the hearing. Motions introduced during a hearing may be made orally on the record unless the administrative law judge directs otherwise.

(d) *Answers to motions.* Any party may file an answer, with affidavits or other evidence in support of the answer, not later than 10 days after service of a written motion on that party. When a motion is made during a hearing, the answer may be made at the hearing on the record, orally or in writing, within a reasonable time determined by the administrative law judge.

(e) *Rulings on motions.* The administrative law judge must rule on all motions as follows:

(1) *Discovery motions.* The administrative law judge must resolve all pending discovery motions not later than 10 days before the hearing.

(2) *Pre-hearing motions.* The administrative law judge must resolve all pending pre-hearing motions not later than 7 days before the hearing. If the administrative law judge issues a ruling or order orally, the administrative law judge must serve a written copy of the ruling or order, within 3 days, on each party. In all other cases, the administrative law judge must issue rulings and orders in writing and must serve a copy of the ruling or order on each party.

(3) *Motions made during the hearing.* The administrative law judge may issue rulings and orders on motions made during the hearing orally. Oral rulings or orders on motions must be made on the record.

(f) *Specific motions.* A party may file the following motions with the Enforcement Docket Clerk:

(1) *Motion to dismiss for insufficiency.* A respondent may file a motion to dismiss the complaint for insufficiency instead of filing an answer. If the administrative law judge denies the motion to dismiss the complaint for insufficiency, the respondent must file an answer not later than 20 days after service of the administrative law judge's denial of the motion. A motion to dismiss the complaint for insufficiency must show that the complaint fails to state a violation of 49 U.S.C. chapter 449 (except sections 44902, 44903(d), 44907(a)-(d)(1)(A), 44907(d)(1)(C)-(f),

44908, and 44909), or a regulation prescribed or order issued under any of those provisions.

(2) *Motion to dismiss.* A party may file a motion to dismiss, specifying the grounds for dismissal. If an administrative law judge grants a motion to dismiss in part, a party may appeal the administrative law judge's ruling on the motion to dismiss under § 1503.219(b).

(i) *Motion to dismiss a request for a hearing.* An agency attorney may file a motion to dismiss a request for a hearing instead of filing a complaint. If the motion to dismiss is not granted, the agency attorney must file the complaint and must serve a copy of the complaint on each party not later than 20 days after service of the administrative law judge's ruling or order on the motion to dismiss. If the motion to dismiss is granted and the proceedings are terminated without a hearing, the respondent may file an appeal pursuant to § 1503.233. If required by the decision on appeal, the agency attorney must file a complaint and must serve a copy of the complaint on each party not later than 20 days after service of the decision on appeal.

(ii) *Motion to dismiss a complaint.* A respondent may file a motion to dismiss a complaint instead of filing an answer. If the motion to dismiss is not granted, the respondent must file an answer and must serve a copy of the answer on each party not later than 20 days after service of the administrative law judge's ruling or order on the motion to dismiss. If the motion to dismiss is granted and the proceedings are terminated without a hearing, the agency attorney may file an appeal pursuant to § 1503.233. If required by the decision on appeal, the respondent must file an answer and must serve a copy of the answer on each party not later than 10 days after service of the decision on appeal.

(3) *Motion for more definite statement.* A party may file a motion for more definite statement of any pleading that requires a response under this subpart. A party must set forth, in detail, the indefinite or uncertain allegations contained in a complaint or response to any pleading and must submit the details that the party believes would make the allegation or response definite and certain.

(i) *Complaint.* A respondent may file a motion requesting a more definite statement of the allegations contained in the complaint instead of filing an answer. If the administrative law judge grants the motion, the agency attorney must supply a more definite statement not later than 15 days after service of the ruling granting the motion. If the agency attorney fails to supply a more definite statement, the administrative law judge must strike the allegations in the complaint to which the motion is directed. If the administrative law judge denies the motion, the respondent must file an answer and must serve a copy of the answer on each party not later than 20 days after service of the order of denial.

(ii) *Answer.* An agency attorney may file a motion requesting a more definite statement if an answer fails to respond clearly to the allegations in the complaint. If the administrative law judge grants the motion, the respondent must supply a more definite statement not later than 15 days after service of the ruling on the motion. If the respondent fails to supply a more definite statement, the administrative law judge must strike those statements in the answer to which the motion is directed. The respondent's failure to supply a more definite statement may be deemed an admission of unanswered allegations in the complaint.

(4) *Motion to strike.* Any party may make a motion to strike any insufficient allegation or defense, or any redundant, immaterial, or irrelevant matter in a pleading. A party must file a motion to strike before a response is required under this subpart or, if a response is not required, not later than 10 days after service of the pleading.

(5) *Motion for decision.* A party may make a motion for decision, regarding all or any part of the proceedings, at any time before the administrative law judge has issued an initial decision in the proceedings. The administrative law judge must grant a party's motion for decision if the pleadings, depositions, answers to interrogatories, admissions, matters that the administrative law judge has officially noticed, or evidence introduced during the hearing show that there is no genuine issue of material fact and that the party making the motion is entitled to a decision as a matter of law. The party making the motion for decision has the burden of showing that there is no genuine issue of material fact.

(6) *Motion for disqualification.* A party may file the motion at any time after the administrative law judge has been assigned to the proceedings but must make the motion before the administrative law judge files an initial decision in the proceedings.

(i) *Motion and supporting affidavit.* A party must state the grounds for disqualification, including, but not limited to, personal bias, pecuniary interest, or other factors showing disqualification, in the motion for disqualification. A party must submit an affidavit with the motion for disqualification that sets forth, in detail, the matters alleged to constitute grounds for disqualification.

(ii) *Answer.* A party must respond to the motion for disqualification not later than 5 days after service of the motion for disqualification.

(iii) *Decision on motion for disqualification.* The administrative law judge must render a decision on the motion for disqualification not later than 20 days after the motion has been filed. If the administrative law judge finds that the motion for disqualification and supporting affidavit show a basis for disqualification, the administrative law judge must withdraw from the proceedings immediately. If the administrative law judge finds that disqualification is not warranted, the administrative law judge must deny the motion and state the grounds for the denial on the record. If the administrative law judge fails to rule on a party's motion for disqualification within 20 days after the motion has been filed, the motion is deemed granted.

(iv) *Appeal.* A party may appeal the administrative law judge's denial of the motion for disqualification in accordance with § 1503.219(b).

§ 1503.219 Interlocutory appeals.

(a) *General.* Unless otherwise provided in this subpart, a party may not appeal a ruling or decision of the administrative law judge to the TSA decision maker until the initial decision has been entered on the record. A decision or order of the TSA decision maker on the interlocutory appeal does not constitute a final order of the Under Secretary for the purposes of judicial appellate review under 49 U.S.C. 46110.

(b) *Interlocutory appeal for cause.* If a party files a written request for an interlocutory appeal for cause with the administrative law judge, or orally requests an interlocutory appeal for cause, the proceedings are stayed until the administrative law judge issues a decision on the request. If the administrative law judge grants the request, the proceedings are stayed until the TSA decision maker issues a decision on the interlocutory appeal. The administrative law judge must grant an interlocutory appeal for cause if a party shows that delay of the appeal would be detrimental to the public interest or would result in undue prejudice to any party.

(c) *Interlocutory appeals of right.* If a party notifies the administrative law judge of an interlocutory appeal of right, the proceedings are stayed until the TSA decision maker issues a decision

on the interlocutory appeal. A party may file an interlocutory appeal, without the consent of the administrative law judge, before an initial decision has been entered in the case of:

(1) A ruling or order by the administrative law judge barring a person from the proceedings.

(2) Failure of the administrative law judge to dismiss the proceedings in accordance with § 1503.215.

(3) A ruling or order by the administrative law judge in violation of § 1503.205(b).

(4) A ruling or order by the administrative law judge regarding public access to a particular docket or documents.

(d) *Procedure.* Not later than 10 days after the administrative law judge's decision forming the basis of an interlocutory appeal of right or not later than 10 days after the administrative law judge's decision granting an interlocutory appeal for cause, a party must file a notice of interlocutory appeal, with supporting documents, and the party must serve a copy of the notice and supporting documents on each party. Not later than 10 days after service of the appeal brief, a party must file a reply brief, if any, and the party must serve a copy of the reply brief on each party. The TSA decision maker must render a decision on the interlocutory appeal, on the record and as a part of the decision in the proceedings, within a reasonable time after receipt of the interlocutory appeal.

(e) *Frivolous appeals.* The TSA decision maker may reject frivolous, repetitive, or dilatory appeals, and may issue an order precluding one or more parties from making further interlocutory appeals in a proceeding in which there have been frivolous, repetitive, or dilatory interlocutory appeals.

§ 1503.220 Discovery.

(a) *Initiation of discovery.* Any party may initiate discovery described in this section, without the consent or approval of the administrative law judge, at any time after a complaint has been filed in the proceedings.

(b) *Methods of discovery.* The following methods of discovery are permitted under this section: depositions on oral examination or written questions of any person; written interrogatories directed to a party; requests for production of documents or tangible items to any person; and requests for admission by a party. A party is not required to file written discovery requests and responses with the administrative law judge or the Enforcement Docket Clerk. In the event of a discovery dispute, a party must attach a copy of these documents in support of a motion made under this section.

(c) *Service on the agency.* A party must serve each discovery request directed to the agency or any agency employee on the agency attorney of record.

(d) *Time for response to discovery requests.* Unless otherwise directed by this subpart or agreed by the parties, a party must respond to a request for discovery, including filing objections to a request for discovery, not later than 30 days after service of the request.

(e) *Scope of discovery.* Subject to the limits on discovery set forth in paragraph (f) of this section, a party may discover any matter that is not privileged and that is relevant to the subject matter of the proceeding. A party may discover information that relates to the claim or defense of any party including the existence, description, nature, custody, condition, and location of any document or other tangible item and the identity and location of any person having knowledge of discoverable matter. A party may discover facts known, or opinions held, by an expert who any other party expects to call to testify at the hearing. A party may not object to a discovery request on the basis that the information sought would not be admissible at the hearing if the information sought during discovery is reasonably calculated to lead to the discovery of admissible evidence.

(f) *Limiting discovery.* The administrative law judge must limit the frequency and extent of discovery permitted by this section if a party shows that—

(1) The information requested is cumulative or repetitious;

(2) The information requested can be obtained from another less burdensome and more convenient source;

(3) The party requesting the information has had ample opportunity to obtain the information through other discovery methods permitted under this section; or

(4) The method or scope of discovery requested by the party is unduly burdensome or expensive.

(g) *Confidential orders.* A party or person who has received a discovery request for information that is related to a trade secret, confidential or sensitive material, competitive or commercial information, proprietary data, or information on research and development, may file a motion for a confidential order with the administrative law judge and must serve a copy of the motion for a confidential order on each party.

(1) The party or person making the motion must show that the confidential order is necessary to protect the information from disclosure to the public.

(2) If the administrative law judge determines that the requested material is not necessary to decide the case, the administrative law judge must preclude any inquiry into the matter by any party.

(3) If the administrative law judge determines that the requested material may be disclosed during discovery, the administrative law judge may order that the material may be discovered and disclosed under limited conditions or may be used only under certain terms and conditions.

(4) If the administrative law judge determines that the requested material is necessary to decide the case and that a confidential order is warranted, the administrative law judge must provide:

(i) An opportunity for review of the document by the parties off the record;

(ii) Procedures for excluding the information from the record; and

(iii) Order that the parties must not disclose the information in any manner and the parties must not use the information in any other proceeding.

(h) *Protective orders.* A party or a person who has received a request for discovery may file a motion for protective order and must serve a copy of the motion for protective order on each party. The party or person making the motion must show that the protective order is necessary to protect the party or the person from annoyance, embarrassment, oppression, or undue burden or expense. As part of the protective order, the administrative law judge may:

(1) Deny the discovery request;

(2) Order that discovery be conducted only on specified terms and conditions, including a designation of the time or place for discovery or a determination of the method of discovery; or

(3) Limit the scope of discovery or preclude any inquiry into certain matters during discovery.

(i) *Duty to supplement or amend responses.* A party who has responded to a discovery request has a duty to supplement or amend the response, as soon as the information is known, as follows:

(1) A party must supplement or amend any response to a question requesting the identity and location of any person having knowledge of discoverable matters.

(2) A party must supplement or amend any response to a question requesting the identity of each person

who will be called to testify at the hearing as an expert witness and the subject matter and substance of that witness' testimony.

(3) A party must supplement or amend any response that was incorrect when made or any response that was correct when made but is no longer correct, accurate, or complete.

(j) *Depositions.* The following rules apply to depositions taken pursuant to this section:

(1) *Form.* A deposition must be taken on the record and reduced to writing. The person being deposed must sign the deposition unless the parties agree to waive the requirement of a signature.

(2) *Administration of oaths.* Within the United States, or a territory or possession subject to the jurisdiction of the United States, a party must take a deposition before a person authorized to administer oaths by the laws of the United States or authorized by the law of the place where the examination is held. In foreign countries, a party will take a deposition in any manner allowed by the Federal Rules of Civil Procedure (28 U.S.C. App.).

(3) *Notice of deposition.* A party must serve a notice of deposition, stating the time and place of the deposition and the name and address of each person to be examined, on the person to be deposed, on the administrative law judge, on the Enforcement Docket Clerk, and on each party not later than 7 days before the deposition. A party may serve a notice of deposition less than 7 days before the deposition only with consent of the administrative law judge. If a subpoena duces tecum is to be served on the person to be examined, the party must attach a copy of the subpoena duces tecum that describes the materials to be produced at the deposition to the notice of deposition.

(4) *Use of depositions.* A party may use any part or all of a deposition at a hearing authorized under this subpart only upon a showing of good cause. The deposition may be used against any party who was present or represented at the deposition or who had reasonable notice of the deposition.

(k) *Interrogatories.* A party, the party's attorney, or the party's representative may sign the party's responses to interrogatories. A party must answer each interrogatory separately and completely in writing. If a party objects to an interrogatory, the party must state the objection and the reasons for the objection. An opposing party may use any part or all of a party's responses to interrogatories at a hearing authorized under this subpart to the extent that the response is relevant, material, and not repetitious.

(1) A party must not serve more than 30 interrogatories to each other party. Each subpart of an interrogatory will be counted as a separate interrogatory.

(2) Before serving additional interrogatories on a party, a party must file a motion for leave to serve additional interrogatories on a party with the administrative law judge and must serve a copy on each party before serving additional interrogatories on a party. The administrative law judge may grant the motion only if the party shows good cause for the party's failure to inquire about the information previously and that the information cannot reasonably be obtained using less burdensome discovery methods or be obtained from other sources.

(l) *Requests for admission.* A party may serve a written request for admission of the truth of any matter within the scope of discovery under this section or the authenticity of any document described in the request. A party must set forth each request for admission separately. A party must serve copies of documents referenced in the request for admission unless the documents have been provided or are reasonably available for inspection and copying.

(1) *Time.* A party's failure to respond to a request for admission, in writing and signed by the attorney or the party, not later than 30 days after service of the request, is deemed an admission of the truth of the statement or statements contained in the request for admission. The administrative law judge may determine that a failure to respond to a request for admission is not deemed an admission of the truth if a party shows that the failure was due to circumstances beyond the control of the party or the party's attorney.

(2) *Response.* A party may object to a request for admission and must state the reasons for objection. A party may specifically deny the truth of the matter or describe the reasons why the party is unable to truthfully deny or admit the matter. If a party is unable to deny or admit the truth of the matter, the party must show that the party has made reasonable inquiry into the matter or that the information known to, or readily obtainable by, the party is insufficient to enable the party to admit or deny the matter. A party may admit or deny any part of the request for admission. If the administrative law judge determines that a response does not comply with the requirements of this rule or that the response is insufficient, the matter is deemed admitted.

(3) *Effect of admission.* Any matter admitted or deemed admitted under this section is conclusively established for the purpose of the hearing and appeal.

(m) *Motion to compel discovery.* A party may make a motion to compel discovery if a person refuses to answer a question during a deposition, a party fails or refuses to answer an interrogatory, if a person gives an evasive or incomplete answer during a deposition or when responding to an interrogatory, or a party fails or refuses to produce documents or tangible items. During a deposition, the proponent of a question may complete the deposition or may adjourn the examination before making a motion to compel if a person refuses to answer.

(n) *Failure to comply with a discovery order or order to compel.* If a party fails to comply with a discovery order or an order to compel, the administrative law judge, limited to the extent of the party's failure to comply with the discovery order or motion to compel, may:

(1) Strike that portion of a party's pleadings;

(2) Preclude prehearing or discovery motions by that party;

(3) Preclude admission of that portion of a party's evidence at the hearing; or

(4) Preclude that portion of the testimony of that party's witnesses at the hearing.

§ 1503.221 Notice of hearing.

(a) *Notice.* The administrative law judge must give each party at least 60 days notice of the date, time, and location of the hearing. With the consent of the administrative law judge, the parties may agree to hold the hearing on an earlier date than the date specified in the notice of hearing.

(b) *Date, time, and location of the hearing.* The administrative law judge to whom the proceedings have been assigned must set a reasonable date, time, and location for the hearing. The administrative law judge must consider the need for discovery and any joint procedural or discovery schedule submitted by the parties when determining the hearing date. The administrative law judge must give due regard to the convenience of the parties, the location where the majority of the witnesses reside or work, and whether the location is served by a scheduled air carrier.

§ 1503.222 Evidence.

(a) *General.* A party is entitled to present the party's case or defense by oral, documentary, or demonstrative evidence, to submit rebuttal evidence, and to conduct any cross-examination that may be required for a full and true disclosure of the facts.

(b) *Admissibility.* A party may introduce any oral, documentary, or demonstrative evidence in support of the party's case or defense. The administrative law judge must admit any oral, documentary, or demonstrative evidence introduced by a party but must exclude irrelevant, immaterial, or unduly repetitious evidence.

(c) *Hearsay evidence.* Hearsay evidence is admissible in proceedings governed by this subpart. The fact that evidence submitted by a party is hearsay goes only to the weight of the evidence and does not affect its admissibility.

§ 1503.223 Standard of proof.

The administrative law judge may issue an initial decision or may rule in a party's favor only if the decision or ruling is supported by, and in accordance with, the reliable, probative, and substantial evidence contained in the record. In order to prevail, the party with the burden of proof must prove the party's case or defense by a preponderance of reliable, probative, and substantial evidence.

§ 1503.224 Burden of proof.

(a) Except in the case of an affirmative defense, the burden of proof is on the agency.

(b) Except as otherwise provided by statute or rule, the proponent of a motion, request, or order has the burden of proof.

(c) A party who has asserted an affirmative defense has the burden of proving the affirmative defense.

§ 1503.225 Offer of proof.

A party whose evidence has been excluded by a ruling of the administrative law judge may offer the evidence for the record on appeal.

§ 1503.226 Public disclosure of evidence.

This section applies to information other than Sensitive Security Information (SSI). All release of SSI is governed by § 1503.230.

(a) The administrative law judge may order that any other information contained in the record be withheld from public disclosure. Any person may object to disclosure of information in the record by filing a written motion to withhold specific information with the administrative law judge and serving a copy of the motion on each party. The party must state the specific grounds for nondisclosure in the motion.

(b) The administrative law judge must grant the motion to withhold information in the record if, based on the motion and any response to the motion, the administrative law judge determines that disclosure would be detrimental to transportation safety, disclosure would not be in the public interest, or that the information is not otherwise required to be made available to the public.

§ 1503.227 Expert or opinion witnesses.

An employee of the agency may not be called as an expert or opinion witness, for any party other than the TSA, in any proceeding governed by this subpart. An employee of a respondent may not be called by an agency attorney as an expert or opinion witness for the TSA in any proceeding governed by this subpart to which the respondent is a party.

§ 1503.228 Subpoenas.

(a) *Request for subpoena.* A party may obtain a subpoena to compel the attendance of a witness at a deposition or hearing or to require the production of documents or tangible items from the administrative law judge who is assigned to the case, or, if no administrative law judge is assigned or the assigned law judge is unavailable, from the chief administrative law judge. The party must complete the subpoena, stating the title of the action and the date and time for the witness' attendance or production of documents or items. The party who obtained the subpoena must serve the subpoena on the witness.

(b) *Motion to quash or modify the subpoena.* A party, or any person upon whom a subpoena has been served, may file a motion to quash or modify the subpoena at or before the time specified in the subpoena for compliance. The applicant must describe, in detail, the basis for the application to quash or modify the subpoena including, but not limited to, a statement that the testimony, document, or tangible evidence is not relevant to the proceeding, that the subpoena is not reasonably tailored to the scope of the proceeding, or that the subpoena is unreasonable and oppressive. A motion to quash or modify the subpoena will stay the effect of the subpoena pending a decision by the administrative law judge on the motion.

(c) *Enforcement of subpoena.* Upon a showing that a person has failed or refused to comply with a subpoena, a party may apply to the local Federal district court to seek judicial enforcement of the subpoena in accordance with 49 U.S.C. 46104.

§ 1503.229 Witness fees.

(a) *General.* Unless otherwise authorized by the administrative law judge, the party who applies for a subpoena to compel the attendance of a witness at a deposition or hearing, or the party at whose request a witness appears at a deposition or hearing, must pay the witness fees described in this section.

(b) *Amount.* Except for an employee of the agency who appears at the direction of the agency, a witness who appears at a deposition or hearing is entitled to the same fees and mileage expenses as are paid to a witness in a court of the United States in comparable circumstances.

§ 1503.230 Record.

(a) *Exclusive record.* The request for hearing, complaint, answer, transcript of all testimony in the hearing, all exhibits received into evidence, and all motions, applications, requests, and rulings will constitute the exclusive record for decision of the proceedings and the basis for the issuance of any orders in the proceeding.

(b) *Examination and copying of record—(1) Generally.* Any person interested in reviewing or obtaining a copy of a record may do so only by submitting a FOIA request under 5 U.S.C. 552 and 49 CFR part 7. Portions of the record may be exempt from disclosure pursuant to FOIA.

(2) *Docket Files or Documents Not for Public Disclosure.* (i) Only the following persons may review docket files or particular documents that are not for public disclosure:

(A) parties to the proceedings;

(B) their designated representatives; and

(C) persons who have a need to know as determined by the Under Secretary.

(ii) Those persons with permission to review these documents or docket files may view the materials at the TSA Enforcement Docket, GSA Building, Room 5008, 301 Seventh Street SW., Washington, DC 20407. Persons with access to these records may have a copy of the records after payment of reasonable costs.

§ 1503.231 Argument before the administrative law judge.

(a) *Arguments during the hearing.* During the hearing, the administrative law judge must give the parties a reasonable opportunity to present arguments on the record supporting or opposing motions, objections, and rulings if the parties request an opportunity for argument. The administrative law judge may request written arguments during the hearing if the administrative law judge finds that submission of written arguments would be reasonable.

(b) *Final oral argument.* At the conclusion of the hearing and before the

administrative law judge issues an initial decision in the proceedings, the parties are entitled to submit oral proposed findings of fact and conclusions of law, exceptions to rulings of the administrative law judge, and supporting arguments for the findings, conclusions, or exceptions. At the conclusion of the hearing, a party may waive final oral argument.

(c) *Posthearing briefs.* The administrative law judge may request written posthearing briefs before the administrative law judge issues an initial decision in the proceedings. If a party files a written posthearing brief, the party must include proposed findings of fact and conclusions of law, exceptions to rulings of the administrative law judge, and supporting arguments for the findings, conclusions, or exceptions. The administrative law judge must give the parties a reasonable opportunity, not more than 30 days after receipt of the transcript, to prepare and submit the briefs.

§ 1503.232 Initial decision.

(a) *Contents.* The administrative law judge must issue an initial decision at the conclusion of the hearing. In each oral or written decision, the administrative law judge must include findings of fact and conclusions of law, and the grounds supporting those findings and conclusions, upon all material issues of fact, the credibility of witnesses, the applicable law, any exercise of the administrative law judge's discretion, the amount of any civil penalty found appropriate by the administrative law judge, and a discussion of the basis for any order issued in the proceedings. The administrative law judge is not required to provide a written explanation for rulings on objections, procedural motions, and other matters not directly relevant to the substance of the initial decision. If the administrative law judge refers to any previous unreported or unpublished initial decision, the administrative law judge must make copies of that initial decision available to all parties and the TSA decision maker.

(b) *Oral decision.* Except as provided in paragraph (c) of this section, at the conclusion of the hearing, the administrative law judge must issue the initial decision and order orally on the record.

(c) *Written decision.* The administrative law judge may issue a written initial decision not later than 30 days after the conclusion of the hearing or submission of the last post-hearing brief if the administrative law judge finds that issuing a written initial decision is reasonable. The administrative law judge must serve a copy of any written initial decision on each party.

(d) *Order assessing civil penalty.* Unless appealed pursuant to § 1503.233, the initial decision issued by the administrative law judge will be considered an order assessing civil penalty if the administrative law judge finds that an alleged violation occurred and determines that a civil penalty, in an amount found appropriate by the administrative law judge, is warranted.

§ 1503.233 Appeal from initial decision.

(a) *Notice of appeal.* A party may appeal the initial decision, and any decision not previously appealed pursuant to § 1503.219, by filing a notice of appeal with the Enforcement Docket Clerk. A party must file the notice of appeal with the U.S. ?Department of Transportation, Transportation Security Administration, Office of the Chief Counsel, TSA–2, Attention: Enforcement Docket Clerk, 400 Seventh Street, SW., Washington, DC 20590. A party must file the notice of appeal not later than 10 days after entry of the oral initial decision on the record or service of the written initial decision on the parties and must serve a copy of the notice of appeal on each party.

(b) *Issues on appeal.* A party may appeal only the following issues:

(1) Whether each finding of fact is supported by a preponderance of reliable, probative, and substantial evidence;

(2) Whether each conclusion of law is made in accordance with applicable law, precedent, and public policy; and

(3) Whether the administrative law judge committed any prejudicial errors during the hearing that support the appeal.

(c) *Perfecting an appeal.* Unless otherwise agreed by the parties, a party must perfect an appeal, not later than 50 days after entry of the oral initial decision on the record or service of the written initial decision on the party, by filing an appeal brief with the Enforcement Docket Clerk.

(1) *Extension of time by agreement of the parties.* The parties may agree to extend the time for perfecting the appeal with the consent of the TSA decision maker. If the TSA decision maker grants an extension of time to perfect the appeal, the Enforcement Docket Clerk will serve a letter confirming the extension of time on each party.

(2) *Written motion for extension.* If the parties do not agree to an extension of time for perfecting an appeal, a party desiring an extension of time may file a written motion for an extension with the Enforcement Docket Clerk and must serve a copy of the motion on each party. The TSA decision maker may grant an extension if good cause for the extension is shown in the motion.

(d) *Appeal briefs.* A party must file the appeal brief with the TSA Enforcement Docket Clerk and must serve a copy of the appeal brief on each party.

(1) A party must set forth, in detail, the party's specific objections to the initial decision or rulings in the appeal brief. A party also must set forth, in detail, the basis for the appeal, the reasons supporting the appeal, and the relief requested in the appeal. If the party relies on evidence contained in the record for the appeal, the party must specifically refer to the pertinent evidence contained in the transcript in the appeal brief.

(2) The TSA decision maker may dismiss an appeal, on the TSA decision maker's own initiative or upon motion of any other party, where a party has filed a notice of appeal but fails to perfect the appeal by timely filing an appeal brief.

(e) *Reply brief.* Unless otherwise agreed by the parties, any party may file a reply brief not later than 35 days after the appeal brief has been served on that party. The party filing the reply brief must serve a copy of the reply brief on each party. If the party relies on evidence contained in the record for the reply, the party must specifically refer to the pertinent evidence contained in the transcript in the reply brief.

(1) *Extension of time by agreement of the parties.* The parties may agree to extend the time for filing a reply brief with the consent of the TSA decision maker. If the TSA decision maker grants an extension of time to file the reply brief, the Enforcement Docket Clerk will serve a letter confirming the extension of time on each party.

(2) *Written motion for extension.* If the parties do not agree to an extension of time for filing a reply brief, a party desiring an extension of time may file a written motion for an extension and will serve a copy of the motion on each party. The TSA decision maker may grant an extension if good cause for the extension is shown in the motion.

(f) *Other briefs.* The TSA decision maker may allow any person to submit an amicus curiae brief in an appeal of an initial decision. A party may not file more than one appeal brief or reply brief. A party may petition the TSA decision maker, in writing, for leave to file an additional brief and must serve a copy of the petition on each party. The

party may not file the additional brief with the petition. The TSA decision maker may grant leave to file an additional brief if the party demonstrates good cause for allowing additional argument on the appeal. The TSA decision maker will allow a reasonable time for the party to file the additional brief.

(g) *Number of copies.* A party must file the original appeal brief or the original reply brief, and two copies of the brief, with the Enforcement Docket Clerk.

(h) *Oral argument.* The TSA decision maker has sole discretion to permit oral argument on the appeal. On the TSA decision maker's own initiative or upon written motion by any party, the TSA decision maker may find that oral argument will contribute substantially to the development of the issues on appeal and may grant the parties an opportunity for oral argument.

(i) *Waiver of objections on appeal.* If a party fails to object to any alleged error regarding the proceedings in an appeal or a reply brief, the party waives any objection to the alleged error. The TSA decision maker is not required to consider any objection in an appeal brief or any argument in the reply brief if a party's objection is based on evidence contained on the record and the party does not specifically refer to the pertinent evidence from the record in the brief.

(j) *The TSA decision maker's decision on appeal.* The TSA decision maker will review the briefs on appeal and the oral argument, if any, to determine if the administrative law judge committed prejudicial error in the proceedings or that the initial decision should be affirmed, modified, or reversed. The TSA decision maker may affirm, modify, or reverse the initial decision, make any necessary findings, or may remand the case for any proceedings that the TSA decision maker determines may be necessary.

(1) The TSA decision maker may raise any issue, on the TSA decision maker's own initiative, that is required for proper disposition of the proceedings. The TSA decision maker will give the parties a reasonable opportunity to submit arguments on the new issues before making a decision on appeal. If an issue raised by the TSA decision maker requires the consideration of additional testimony or evidence, the TSA decision maker will remand the case to the administrative law judge for further proceedings and an initial decision related to that issue. If an issue raised by the TSA decision maker is solely an issue of law or the issue was addressed at the hearing but was not raised by a party in the briefs on appeal, a remand of the case to the administrative law judge for further proceedings is not required but may be provided in the discretion of the TSA decision maker.

(2) The TSA decision maker will issue the final decision and order of the Under Secretary on appeal in writing and will serve a copy of the decision and order on each party. Unless a petition for review is filed pursuant to § 1503.235, a final decision and order of the Under Secretary will be considered an order assessing civil penalty if the TSA decision maker finds that an alleged violation occurred and a civil penalty is warranted.

(3) A final decision and order of the Under Secretary after appeal is precedent in any other civil penalty action. Any issue, finding or conclusion, order, ruling, or initial decision of an administrative law judge that has not been appealed to the TSA decision maker is not precedent in any other civil penalty action.

(4) The TSA decision maker will determine whether the decision and order of the TSA decision maker, with the administrative law judge's initial decision or order attached, may be released to the public, either in whole or in redacted form. In making this determination, the TSA decision maker will consider whether disclosure of any of the information in the decision and order would be detrimental to transportation safety, would not be in the public interest, or should not otherwise be required to be made available to the public.

§ 1503.234 Petition to reconsider or modify a final decision and order of the TSA decision maker on appeal.

(a) *General.* Any party may petition the TSA decision maker to reconsider or modify a final decision and order issued by the TSA decision maker on appeal from an initial decision. A party must file a petition to reconsider or modify not later than 30 days after service of the TSA decision maker's final decision and order on appeal and must serve a copy of the petition on each party. The TSA decision maker will not reconsider or modify an initial decision and order issued by an administrative law judge that has not been appealed by any party to the TSA decision maker and filed with the Enforcement Docket Clerk.

(b) *Form and number of copies.* A party must file a petition to reconsider or modify, in writing. The party must file the original petition with the Enforcement Docket Clerk and must serve a copy of the petition on each party.

(c) *Contents.* A party must state briefly and specifically the alleged errors in the final decision and order on appeal, the relief sought by the party, and the grounds that support, the petition to reconsider or modify.

(1) If the petition is based, in whole or in part, on allegations regarding the consequences of the TSA decision maker's decision, the party must describe these allegations and must describe, and support, the basis for the allegations.

(2) If the petition is based, in whole or in part, on new material not previously raised in the proceedings, the party must set forth the new material and include affidavits of prospective witnesses and authenticated documents that would be introduced in support of the new material. The party must explain, in detail, why the new material was not discovered through due diligence prior to the hearing.

(d) *Repetitious and frivolous petitions.* The TSA decision maker will not consider repetitious or frivolous petitions. The TSA decision maker may summarily dismiss repetitious or frivolous petitions to reconsider or modify.

(e) *Reply petitions.* Any other party may reply to a petition to reconsider or modify, not later than 10 days after service of the petition on that party, by filing a reply with the Enforcement Docket Clerk. A party must serve a copy of the reply on each party.

(f) *Effect of filing petition.* Unless otherwise ordered by the TSA decision maker, filing of a petition pursuant to this section will stay the effective date of the TSA decision maker's final decision and order on appeal.

(g) *The TSA decision maker's decision on petition.* The TSA decision maker has sole discretion to grant or deny a petition to reconsider or modify. The TSA decision maker will grant or deny a petition to reconsider or modify within a reasonable time after receipt of the petition or receipt of the reply petition, if any. The TSA decision maker may affirm, modify, or reverse the final decision and order on appeal, or may remand the case for any proceedings that the TSA decision maker determines may be necessary.

§ 1503.235 Judicial review of a final order.

A person may seek judicial review of a final order of the Under Secretary as provided in 49 U.S.C. 46110. A party seeking judicial review of a final order must file a petition for review not later than 60 days after the final order has been served on the party.

Subpart H—Civil Monetary Penalty Inflation Adjustment

§ 1503.301 Scope and purpose.

(a) This subpart provides a mechanism for the regular adjustment for inflation of civil monetary penalties in conformity with the Federal Civil Penalties Inflation Adjustment Act of 1990, 28 U.S.C. 2461 (note), as amended, in order to maintain the deterrent effect of civil monetary penalties and to promote compliance with the law. This subpart also sets out the current adjusted maximum civil monetary penalties or range of minimum and maximum civil monetary penalties for each statutory civil penalty subject to the TSA's jurisdiction.

(b) Each adjustment to the maximum civil monetary penalty or the range of minimum and maximum civil monetary penalties, as applicable, made in accordance with this subpart applies prospectively from the date it becomes effective to actions initiated under this part, notwithstanding references to a specific maximum civil monetary penalty or range of minimum and maximum civil monetary penalties contained elsewhere in this part.

§ 1503.303 Definitions.

The following definitions apply to this subpart:

Civil monetary penalty means any penalty, fine, or other sanction that:

(1) Is for a specific monetary amount as provided by Federal law or has a maximum amount provided by Federal law;

(2) Is assessed or enforced by the TSA pursuant to Federal law; and

(3) Is assessed or enforced pursuant to an administrative proceeding or a civil action in the Federal courts.

Consumer Price Index means the *Consumer Price Index* for all urban consumers published by the Department of Labor.

§ 1503.305 Cost of living adjustments of civil monetary penalties.

(a) *Adjustment determination.* Except for the limitation to the initial adjustment to statutory maximum civil monetary penalties or range of minimum and maximum civil monetary penalties set forth in paragraph (c) of this section, the inflation adjustment under this subpart is determined by increasing the maximum civil monetary penalty or range of minimum and maximum civil monetary penalty for each civil monetary penalty by the cost-of-living adjustment. Any increase determined under this paragraph (a) is rounded to the nearest:

(1) Multiple of $10 in the case of penalties less than or equal to $100;

(2) Multiple of $100 in the case of penalties greater than $100 but less than or equal to $1,000;

(3) Multiple of $1,000 in the case of penalties greater than $1,000 but less than or equal to $10,000;

(4) Multiple of $5,000 in the case of penalties greater than $10,000 but less than or equal to $100,000;

(5) Multiple of $10,000 in the case of penalties greater than $100,000 but less than or equal to $200,000; and

(6) Multiple of $25,000 in the case of penalties greater than $200,000.

(b) *Definition.* For purposes of paragraph (a) of this section, the term *cost-of-living adjustment* means the percentage (if any) for each civil monetary penalty by which the Consumer Price Index for the month of June of the calendar year preceding the adjustment exceeds the Consumer Price Index for the month of June of the calendar year in which the amount of such civil monetary penalty was last set or adjusted pursuant to law.

(c) *Limitation on initial adjustment.* The initial adjustment of maximum civil penalty or range of minimum and maximum civil monetary penalties made pursuant to this subpart does not exceed 10 percent of the statutory maximum civil penalty before an adjustment under this subpart is made. This limitation applies only to the initial adjustment, effective on January 21, 1997.

(d) *Inflation adjustment.* Minimum and maximum civil monetary penalties within the jurisdiction of the TSA are adjusted for inflation as follows:

MINIMUM AND MAXIMUM CIVIL PENALTIES—ADJUSTED FOR INFLATION, EFFECTIVE MARCH 13, 2002

United States Code citation	Civil monetary penalty description	Minimum penalty	New adjusted minimum penalty amount	Maximum penalty amount when last set or adjusted pursuant to law	New or adjusted maximum penalty amount
49 U.S.C. 46301(a)(1) ...	Violations of statutory provisions listed in 49 U.S.C. 46301(a)(1), regulations prescribed, or orders issued under those provisions.	N/A	N/A	$1,100 per violation, adjusted 1/21/97.	$1,100 per violation, adjusted 1/21/97.
49 U.S.C. 46301(a)(2) ...	Violations of statutory provisions listed in 49 U.S.C. 46301(a)(2), regulations prescribed, or orders issued under those provisions by a person operating an aircraft for the transportation of passengers or property for compensation.	N/A	N/A	$11,000 per violation, adjusted 1/21/97.	$11,000 per violation, adjusted 1/21/97.

Issued in Washington, DC, on July 26, 2002.

J.M. Loy,

Acting Under Secretary of Transportation for Security.

[FR Doc. 02–19843 Filed 8–7–02; 8:45 am]

BILLING CODE 4910–62–P

DEPARTMENT OF COMMERCE

National Oceanic and Atmospheric Administration

50 CFR Part 679

[Docket No. 011218304–1304–01; I.D. 080502A]

Fisheries of the Exclusive Economic Zone Off Alaska; Pacific Ocean Perch in the Central Regulatory Area of the Gulf of Alaska

AGENCY: National Marine Fisheries Service (NMFS), National Oceanic and Atmospheric Administration (NOAA), Commerce.

ACTION: Closure.

SUMMARY: NMFS is prohibiting retention of Pacific ocean perch in the Central Regulatory Area of the Gulf of Alaska (GOA). NMFS is requiring that catch of Pacific ocean perch in this area be treated in the same manner as prohibited species and discarded at sea with a minimum of injury. This action is necessary because the allocation of the Pacific ocean perch 2002 total allowable catch (TAC) in this area has been achieved.

DATES: Effective 1200 hrs, Alaska local time (A.l.t.), August 5, 2002, until 2400 hrs, A.l.t., December 31, 2002.

FOR FURTHER INFORMATION CONTACT: Mary Furuness, 907–586–7228.

SUPPLEMENTARY INFORMATION: NMFS manages the groundfish fishery in the GOA exclusive economic zone according to the Fishery Management Plan for the Groundfish Fishery of the Gulf of Alaska (FMP) prepared by the North Pacific Fishery Management Council under authority of the Magnuson-Stevens Fishery Conservation and Management Act. Regulations governing fishing by U.S. vessels in accordance with the FMP appear at subpart H of 50 CFR part 600 and 50 CFR part 679.

The 2002 TAC allocation of Pacific ocean perch for the Central Regulatory Area was established as 8,220 metric tons by an emergency rule implementing 2002 harvest specifications and associated management measures for the groundfish fisheries off Alaska (67 FR 956, January 8, 2002, and 67 FR 34860, May 6, 2002).

In accordance with § 679.20(d)(2), the Administrator, Alaska Region, NMFS, has determined that the allocation of the Pacific ocean perch TAC in the Central Regulatory Area of the GOA has been achieved. Therefore, NMFS is requiring that further catches of Pacific ocean perch in the Central Regulatory Area of the GOA be treated as prohibited species in accordance with § 679.21(b).

Classification

This action responds to the best available information recently obtained from the fishery. The Assistant Administrator for Fisheries, NOAA, finds good cause to waive the requirement to provide prior notice and opportunity for public comment pursuant to the authority set forth at 5 U.S.C. 553(b)(B) as such requirement is contrary to the public interest. This requirement is contrary to the public interest as it would delay the closure of the fishery, lead to overharvesting the allocation of the TAC, and therefore reduce the public's ability to use and enjoy the fishery resource.

The Assistant Administrator for Fisheries, NOAA, also finds good cause to waive the 30 day delay in the effective date of this action under 5 U.S.C. 553(d)(3). This finding is based upon the reasons provided above for waiver of prior notice and opportunity for public comment.

This action is required by § 679.20 and is exempt from review under Executive Order 12866.

Authority: 16 U.S.C. 1801 *et seq.*

Dated: August 5, 2002.

Virginia M. Fay,

Acting Director, Office of Sustainable Fisheries, National Marine Fisheries Service.

[FR Doc. 02–20081 Filed 8–5–02; 3:37 pm]

BILLING CODE 3510–22–S

DEPARTMENT OF COMMERCE

National Oceanic and Atmospheric Administration

50 CFR Part 679

[Docket No. 011218304–1304–01; I.D.080202F]

Fisheries of the Exclusive Economic Zone Off Alaska; Shallow-Water Species Fishery by Vessels Using Trawl Gear in the Gulf of Alaska

AGENCY: National Marine Fisheries Service (NMFS), NationalOceanic and Atmospheric Administration (NOAA), Commerce.

ACTION: Closure.

SUMMARY: NMFS is prohibiting directed fishing for species that comprise the shallow-water species fishery by vessels using trawl gear in the Gulf of Alaska (GOA), except for vessels fishing for pollock using pelagic trawl gear in those portions of the GOA open to directed fishing for pollock. This action is necessary because the third seasonal apportionment of the 2002 Pacific halibut bycatch allowance specified for the shallow-water species fishery in the GOA has been reached.

DATES: Effective 1200 hrs, Alaska local time (A.l.t.), August 5, 2002, until 1200 hrs, A.l.t., September 1, 2002.

FOR FURTHER INFORMATION CONTACT: Mary Furuness, 907–586–7228.

SUPPLEMENTARY INFORMATION: NMFS manages the groundfish fishery in the GOA exclusive economic zone according to the Fishery Management Plan for Groundfish of the Gulf of Alaska (FMP) prepared by the North Pacific Fishery Management Council under authority of the Magnuson-Stevens Fishery Conservation and Management Act. Regulations governing fishing by U.S. vessels in accordance with the FMP appear at subpart H of 50 CFR part 600 and 50 CFR part 679.

The Pacific halibut bycatch allowance for the GOA trawl shallow-water species fishery, which is defined at § 679.21(d)(3)(iii)(A), was established by an emergency rule implementing 2002 harvest specifications and associated management measures for the groundfish fisheries off Alaska (67 FR 956, January 8, 2002) for the third season, the period June 30, 2002, through September 1, 2002, as 200 metric tons.

In accordance with § 679.21(d)(7)(i), the Administrator, Alaska Region, NMFS, has determined that the third seasonal apportionment of the 2002 Pacific halibut bycatch allowance specified for the trawl shallow-water species fishery in the GOA has been reached. Consequently, NMFS is prohibiting directed fishing for the shallow-water species fishery by vessels using trawl gear in the GOA, except for vessels fishing for pollock using pelagic trawl gear in those portions of the GOA open to directed fishing for pollock. The species and species groups that comprise the shallow-water species fishery are: pollock, Pacific cod, shallow-water flatfish, flathead sole, Atka mackerel, and ''other species.≥

Maximum retainable bycatch amounts may be found in the regulations at § 679.20(e) and (f).

Classification

This action responds to the best available information recently obtained from the fishery. The Assistant Administrator for Fisheries, NOAA, finds that, because the third seasonal apportionment of the 2002 Pacific halibut bycatch allowance specified for the shallow-water species fishery in the GOA has been reached, the need to immediately implement this action constitutes good cause to waive the requirement to provide prior notice and opportunity for public comment pursuant to the authority set forth at 5 U.S.C. 553(b)(B). These procedures are unnecessary and contrary to the public interest because of the need to implement these measures in a timely fashion. The third seasonal apportionment of the 2002 Pacific halibut bycatch allowance specified for the shallow-water species fishery in the GOA has been reached. This constitutes good cause to find that the effective date of this action cannot be delayed for 30 days. Accordingly, under 5 U.S.C. 553(d)(3), a delay in the effective date is hereby waived.

This action is required by § 679.20 and is exempt from review under Executive Order 12866.

Authority: 16 U.S.C. 1801 *et seq.*

Dated: August 5, 2002.

Virginia M. Fay,

Acting Director, Office of Sustainable Fisheries, National Marine Fisheries Service.

[FR Doc. 02–20082 Filed 8–5–02; 3:37 pm]

BILLING CODE 3510–22–S

Proposed Rules

Federal Register
Vol. 67, No. 153
Thursday, August 8, 2002

This section of the FEDERAL REGISTER contains notices to the public of the proposed issuance of rules and regulations. The purpose of these notices is to give interested persons an opportunity to participate in the rule making prior to the adoption of the final rules.

NUCLEAR REGULATORY COMMISSION

10 CFR Part 7

RIN 3150–AH02

Federal Advisory Committee Act Regulations

AGENCY: Nuclear Regulatory Commission.

ACTION: Proposed rule.

SUMMARY: The Nuclear Regulatory Commission (NRC) is proposing to amend its regulations on the Federal Advisory Committee Act (FACA) to conform with newly issued General Services Administration regulations.

DATES: Submit comments by October 7, 2002. Comments received after this date will be considered if it is practical to do so, but the Commission is able to ensure consideration only for comments received on or before this date.

ADDRESSES: Mail written comments to: Secretary, U.S. Nuclear Regulatory Commission, Washington, DC 20555–0001, Attn.: Rulemakings and Adjudications Staff. Deliver comments to: 11555 Rockville Pike, Rockville, Maryland 20852–2738, between 7:30 a.m. and 4:15 p.m. on Federal workdays.

Comments also may be submitted, viewed, and downloaded via the NRC's interactive rulemaking Web site (*http://ruleforum.llnl.gov*). This site provides the ability to upload comments as files (any format) if your Web browser supports that function. For information about the interactive rulemaking Web site, contact Ms. Carol Gallagher, 301–415–5905 (e-mail *CAG@nrc.gov*).

Certain documents related to this rulemaking, including comments received, may be examined at the NRC Public Document Room, 11555 Rockville Pike, Rockville, Maryland. Except for restricted information, documents created or received at the NRC after November 1, 1999, are also available electronically at the NRC's Public Electronic Reading Room on the Internet at *http://www.nrc.gov/reading-rm/adams.html.* From this site, the public can gain entry into the NRC's Agencywide Document Access and Management System (ADAMS), which provides text and image files of NRC's public documents. For more information, contact the NRC Public Document Room (PDR) Reference staff at 1–800–397–4209, 301–415–4737 or by e-mail to *PDR@nrc.gov.*

FOR FURTHER INFORMATION CONTACT: John Szabo, Senior Attorney, Office of the General Counsel, U.S. Nuclear Regulatory Commission, Washington, DC 20555–0001, telephone 301–415–1610, e-mail *JLS@nrc.gov.*

SUPPLEMENTARY INFORMATION:

I. Background
II. Plain Language
III. Voluntary Consensus Standards
IV. Environmental Impact: Categorical Exclusion
V. Paperwork Reduction Act Statement
VI. Regulatory Analysis
VII. Regulatory Flexibility Certification
VIII. Backfit Analysis

I. Background

In 1972, the Congress enacted the Federal Advisory Committee Act (Pub. L. 92–463, 5 U.S.C. App.) to regulate the formation and operation of advisory committees by Federal agencies. Section 7(c) of the Act requires the Administrator of the General Services Administration (GSA) to establish administrative guidelines and management controls applicable to advisory committees. Section 8(a) of the Act directs the head of each Federal agency to establish uniform administrative guidelines and management controls for advisory committees established by that agency. Agency guidelines and management controls must be consistent with GSA's directives.

In 1975, the NRC promulgated its Advisory Committee regulations as 10 CFR part 7 (40 FR 8774; March 3, 1975). A revision of part 7 was published on June 27, 1989 (54 FR 26947), in order to maintain consistency between NRC and GSA FACA regulations, which had been issued on December 2, 1987 (52 FR 45929). The GSA issued a revision of its regulations, effective August 20, 2001 (66 FR 37728; July 19, 2001), providing administrative and interpretive guidelines and management controls for Federal agencies concerning the implementation of the Act. GSA's new regulations reflect recent legislative changes, shifts in Federal policy, and Federal court decisions issued since the GSA regulations were issued in 1987.

The Commission has determined that NRC's advisory committee regulations should be revised to make them more consistent with the new GSA FACA regulations. This proposed rule would revise the NRC's FACA regulations to meet that goal.

The following are the most significant changes that would be made to current NRC regulations by this proposed rule:

1. The meetings of NRC advisory committee subcommittees would be exempted from FACA requirements unless the subcommittee reports directly to an NRC employee or its recommendations are adopted by its parent advisory committee without full deliberations by the parent committee.

2. There would be an exemption from FACA requirements for meetings composed only of Federal employees and officials or employees of State, local, and tribal governments to exchange views, information, or advice on the management or implementation of Federal programs in which they share responsibilities, as provided in section 204(b) of the Unfunded Mandates Act of 1995.

3. There would be an exemption from FACA requirements for meetings between NRC employees and committees or groups not actually managed or controlled by the Government which were created by a non-Federal entity and meetings with NRC contractors, applicants, or licensees to discuss specific matters involving the contract or the Commission's efforts to ensure compliance with regulations.

4. The definition of a ''utilized'' committee would be amended to mean a group or committee not established by the Federal Government and whose operations are not managed or controlled by a Federal agency.

5. There would be a de-emphasis of the goal of achieving ''consensus'' as an important factor in determining whether an advisory group is subject to FACA. Instead, the proposed rule provides that whether there is a group deliberative process is a more important consideration than whether the group seeks to achieve consensus.

6. The definition of an ''operational committee'' would be amended to mean a group performing operational

functions specifically authorized by statute or Presidential directive, such as making or implementing Governmental decisions or policy, as long as the group does not become primarily advisory in nature.

7. New definitions of ''discretionary'' and ''non-discretionary'' committees would be created. ''Non-discretionary'' committees would be defined as advisory committees required by statute or Presidential directive, while ''discretionary'' committees would be defined as those established under the authority of an agency head or authorized by statute, but not required by Congress.

8. The definition of advisory committee meeting would be amended to include a gathering of advisory committee members through electronic means, such as by teleconference, video conference, or the Internet.

9. A provision would be added to the effect that the Commission may periodically invite feedback from the public regarding the effectiveness of NRC advisory committees. Currently, NRC's Advisory Committees on Reactor Safeguards, Nuclear Waste, and the Medical Uses of Isotopes conduct periodic self-assessments of their performance. They solicit and receive the views of various stakeholders and the general public on their activities.

10. The NRC would be required to consult with the GSA Committee Management Secretariat prior to the establishment, renewal, or reestablishment of an advisory committee, in addition to current requirements on seeking the Secretariat's review.

11. There would be a requirement for reasonable access for persons with disabilities to attend advisory committee meetings.

II. Plain Language

The Presidential Memorandum dated June 1, 1998, entitled, ''Plain Language in Government Writing,'' directed that the Federal government's writing be in plain language (63 FR 31883; June 10, 1998). Comments on the clarity and effectiveness of the language used in this proposed rule should be sent to the NRC as indicated under the **ADDRESSES** heading.

III. Voluntary Consensus Standards

The National Technology Transfer and Advancement Act of 1995 (Pub. L. 104–113) requires that Federal agencies use technical standards that are developed or adopted by voluntary consensus standards bodies unless using such a standard is inconsistent with applicable law or otherwise impractical. In this proposed rule, the Commission is clarifying its practices regarding Federal advisory committees. This action does not constitute the establishment of a technical standard that requires the use of a voluntary consensus standard developed by such a body.

IV. Environmental Impact: Categorical Exclusion

The NRC has determined that this proposed rule is the type of action described in categorical exclusion 10 CFR 51.22(c)(1). Therefore, neither an environmental impact statement nor an environmental assessment has been prepared for the proposed regulation.

V. Paperwork Reduction Act Statement

This proposed rule contains no information collection requirements and, therefore, is not subject to the requirements of the Paperwork Reduction Act of 1995 (44 U.S.C. 3501 *et seq.*).

VI. Regulatory Analysis

In 2001, the General Services Administration (GSA) published amended Federal Advisory Committee Act (FACA) regulations providing administrative and interpretive guidelines and management controls for Federal agencies concerning the implementation of the Act (66 FR 37728; July 19, 2001). This proposed rule will conform NRC regulations with the amended GSA regulations issued in 2001. The proposed rule will not have a significant impact on state and local governments, particular geographical regions, or health, safety and the environment; nor will it impose substantial costs on licensees, the NRC or other Federal agencies. This constitutes the regulatory analysis for this proposed rule.

VII. Regulatory Flexibility Certification

As required by the Regulatory Flexibility Act of 1980 (5 U.S.C. 605(b)), the Commission certifies that this proposed rule, if adopted, would not have a significant economic impact on a substantial number of small entities. The proposed rule does not impose any obligation or have any financial impact on entities, including any regulated entities that may be ''small entities,'' as defined by the Regulatory Flexibility Act (5 U.S.C. 601(3)), or under the size standards established by the NRC in 10 CFR 2.810.

VIII. Backfit Analysis

The NRC has determined that a backfit analysis is not required for this proposed rule because these amendments do not include any provisions that would impose backfits as defined in 10 CFR Chapter 1.

List of Subjects in 10 CFR Part 7

Advisory committees, Government in the Sunshine Act.

For the reasons set out in the preamble and under the authority of the Atomic Energy Act of 1954, as amended; the Energy Reorganization Act of 1974, as amended; and 5 U.S.C. 553, the NRC is proposing to adopt the following amendments to 10 CFR part 7.

PART 7—ADVISORY COMMITTEES

1. The authority citation for part 7 continues to read as follows:

Authority: Sec. 161, 68 Stat. 948, as amended (42 U.S.C. 2201); sec. 201, 88 Stat. 1242, as amended (42 U.S.C. 5841); Pub. L. 92–463, 86 Stat. 770 (5 U.S.C. App.).

2. In § 7.1, paragraph (d) is revised and paragraphs (e)(1), (e)(2) and (i) are added to read as follows:

§ 7.1 Policy.

* * * * *

(d)(1) An NRC advisory committee shall be established only:

(i) When establishment of the committee is required by law;

(ii) When the Commission determines that the committee is essential to the conduct of NRC business; or

(iii) When the information to be obtained is not available through an existing advisory committee or a source within the Federal Government.

(2) Before establishing an advisory committee, the Commission shall consider whether:

(i) Committee deliberations will result in a significant contribution to the creation, amendment, or elimination of regulations, guidelines, or rules affecting NRC business;

(ii) The information to be obtained is available through another source within the Federal Government;

(iii) The committee will make recommendations resulting in significant improvements in service or reductions in cost; or

(iv) The committee's recommendations will provide an important additional perspective or viewpoint relating to NRC's mission. The advice or recommendations of an advisory committee should be the result of the advisory committee's independent judgment.

(e) * * *

(1) An advisory committee not required to be established by statute terminates no later than two years after its establishment or last renewal, unless renewed.

(2) An advisory committee required to be established by statute terminates upon the expiration of the time explicitly specified in the statute or implied by operation of the statute.

* * * * *

(i) The Commission may periodically invite feedback from the public regarding the effectiveness of NRC advisory committees.

3. Section 7.2 is revised to read as follows:

§ 7.2 Definitions.

Act means the Federal Advisory Committee Act, as amended, 5 U.S.C. App.

Administrator means the Administrator of General Services.

Advisory committee means any committee, board, commission, council, conference, panel, task force, or similar group, or any subcommittee or other subgroup thereof, that is established by statute for the purpose of providing advice or recommendations on issues of policy to an official, branch, or agency of the Federal Government, or that is established or utilized by the President or any agency official to obtain advice or recommendations on issues or policies that fall within the scope of his or her responsibilities, except that the term ''advisory committee'' does not include the following advisory meetings or groups:

(1) Any group composed wholly of full-time officers or employees of the Federal Government;

(2) Any group specifically exempted from the Act or these regulations by an Act of Congress;

(3) Any local civic group whose primary function is that of rendering a public service with respect to a Federal program, or any State or local committee, council, board, commission, or similar group established to advise or make recommendations to any State or local government unit or an official thereof;

(4) Any group that performs primarily operational functions specifically provided by law. Operational functions are those specifically authorized by statute or Presidential directive, such as making or implementing Government decisions or policy, as long as the group does not become primarily advisory in nature;

(5) Any meeting initiated by the President or one or more Federal employees for the purpose of obtaining advice or recommendations from one individual;

(6) Any meeting between an NRC employee with a non-governmental individual or group where advice or recommendations are provided by the attendees on an individual basis and are not sought from the group as a whole;

(7) Any meeting with a committee or group created by a non-Federal entity that is not managed or controlled by the President or a Federal employee;

(8) Any meeting of two or more advisory committee members convened solely to:

(i) Discuss administrative matters relating to the operation of their advisory committee;

(ii) Receive administrative information from a Federal employee;

(iii) Gather information or conduct research for a chartered advisory committee to analyze relevant issues and facts for their advisory committee; or

(iv) Draft proposed position papers for deliberation by their advisory committee;

(9) Any meeting with a group initiated by the President or by one or more Federal employees for the purpose of exchanging facts or information;

(10) Any meeting attended only by full-time or permanent part-time officers or employees of the Federal Government and elected officers of State, local, and tribal governments (or their designated employees with authority to act on their own behalf), acting in their official capacities. However, the purpose of the meeting must be solely to exchange views, information, or advice relating to the management or implementation of Federal programs established pursuant to statute, that explicitly or inherently share intergovernmental responsibilities or administration;

(11) Any meeting of an NRC contractor, applicant, or licensee with an NRC employee to discuss specific matters involving the solicitation, issuance, or implementation of a contract or the Commission's effort to ensure compliance with its regulations; and

(12) Any meeting of a subcommittee or other subgroup of an advisory committee where the subgroup's recommendations will be reviewed by its parent advisory committee.

Agency means an agency of the Government of the United States as defined in 5 U.S.C. 551(1).

Commission means the Nuclear Regulatory Commission of five members, or a quorum thereof, sitting as a body, as provided by section 201 of the Energy Reorganization Act of 1974, 42 U.S.C. 5841, (88 Stat. 1242).

Committee Management Secretariat means the organization established within the General Services Administration, pursuant to section 7(a) of the Act, which is responsible for all matters relating to advisory committees, and carries out the responsibilities of the Administrator of the General Services Administration under the Act and Executive Order 12024 (42 FR 61445; December 1, 1997).

Committee member means an individual who is appointed to serve on an advisory committee and has the full right and obligation to participate in the activities of the committee, including voting on committee recommendations.

Committee meeting means any gathering of advisory committee members (whether in person, by telephone, or through electronic means) held with the approval of an agency for the purpose of deliberating on the substantive matters upon which the advisory committee provides advice or recommendations.

Designated Federal Officer means a government employee appointed, pursuant to § 7.11(a), to chair or attend each meeting of an NRC advisory committee to which he or she is assigned.

Discretionary advisory committee means any advisory committee that is established, but not required to be established, under the authority of an agency head, and its establishment or termination is within the legal discretion of an agency head.

GSA means the General Services Administration.

Non-discretionary advisory committee means any advisory committee either required by statute or Presidential directive. A non-discretionary committee required by statute generally is identified specifically in a statute by name, purpose, or functions and its establishment is mandated.

NRC means the agency established by title II of the Energy Reorganization Act of 1974, 42 U.S.C. 5801 (88 Stat. 1233), and known as the Nuclear Regulatory Commission.

NRC Advisory Committee Management Officer means the individual appointed, pursuant to § 7.10(a), to supervise and control the establishment and management of NRC advisory committees.

NRC Public Document Room means the Public Document Room maintained by the NRC at 11555 Rockville Pike, Rockville, Maryland 20852–2738.

Presidential advisory committee means an advisory committee established by statute or directed by the President to advise the President.

Staff member means any individual who serves in a support capacity to an advisory committee.

Subcommittee means a subgroup of an advisory committee, whether or not its members are drawn in whole or in

part from the parent advisory committee.

Utilized committee means a committee or group not established by the Federal Government, but whose operations are managed or controlled by a Federal agency.

4. Section 7.5 is revised to read as follows:

§ 7.5 Consultation with Committee Management Secretariat on establishment of advisory committees; advisory committee charters.

(a) Before establishing a discretionary advisory committee, the NRC shall consult with the Committee Management Secretariat. With a full understanding of the background and purpose behind the proposed advisory committee, the Committee Management Secretariat may share its knowledge and experience with the NRC on how best to make use of the proposed committee, alternate methods of attaining the agency's purpose, or whether a pre-existing advisory committee performs similar functions. Such consultation should include the transmittal of the proposed committee charter and the following information:

(1) A request for a review of the proposed charter;

(2) An explanation stating why the committee is essential to the conduct of NRC business and is in the public interest;

(3) An explanation stating why the committee's functions cannot be performed by the NRC, an existing NRC advisory committee, or other means (such as a public hearing); and

(4) A description of NRC's plan to attain balanced membership on the committee. The plan must ensure that, in the selection of members for the advisory committee, the NRC will consider a cross-section of those directly affected, interested, and qualified, as appropriate to the nature and functions of the committee. For purposes of attaining balance in an NRC advisory committee's membership, the Commission shall consider for membership interested persons and groups with professional, technical, or personal qualifications or experience that will contribute to the functions and tasks to be performed.

(b) Each proposed committee charter submitted for review pursuant to paragraph (a) of this section shall contain the following information:

(1) The committee's official designation;

(2) The committee's objectives and the scope of its activity;

(3) The period of time necessary for the committee to carry out its purposes;

(4) The NRC official to whom the committee will report;

(5) The NRC office responsible for providing support for the committee;

(6) A description of the duties that the committee will perform, and if such duties are not solely advisory, a specification of the authority for the functions that are not advisory;

(7) The estimated annual operating costs, in dollars and person years, for the committee;

(8) The estimated number and frequency of committee meetings; and

(9) The committee's termination date, if less than two years from the date of the committee's establishment.

(c) The requirements of this part, including the requirements of paragraphs (a) and (b) of this section, shall apply to any subcommittee that functions independently of the parent advisory committee (such as by making recommendations directly to the agency rather than to the parent advisory committee), regardless of whether the subcommittee's members are drawn in whole or in part from the parent advisory committee.

(d) After the Committee Management Secretariat has notified the Commission of the results of its review of a proposal to establish or utilize an NRC discretionary advisory committee, submitted pursuant to paragraph (a) of this section, the Commission shall notify the Committee Management Secretariat whether the advisory committee is actually being established. Filing of the advisory committee charter pursuant to § 7.8 shall be deemed to fulfill this notification requirement. If the advisory committee is not being established, the Commission shall so advise the Committee Management Secretariat, stating whether NRC intends to take any further action with respect to the proposed advisory committee.

(e) The date of filing of an advisory committee charter pursuant to § 7.8 shall be added to the charter when such filing takes place, shall appear on the face of the charter, and shall constitute the date of establishment, renewal, or reestablishment of the committee.

5. Section 7.6 is revised to read as follows:

§ 7.6 Amendments to advisory committee charters.

(a) Final authority for amending the charter of an NRC advisory committee established or utilized by the NRC is vested in the Commission.

(b) Any proposed changes made to a current charter for an NRC advisory committee shall be coordinated with the General Counsel to ensure that they are consistent with applicable legal requirements. When a statute or Executive Order that directed or authorized the establishment of an advisory committee is amended, those sections of the advisory committee's charter affected by the amendments shall also be amended.

(c)(1) The charter of an NRC advisory committee established under general agency authority may be amended when the Commission determines that the existing charter no longer reflects the objectives or functions of the committee. Such changes may be minor (such as revising the name of the advisory committee or modifying the estimated number or frequency of meetings), or they may be major (such as revising the objectives or composition of the committee).

(2) The procedures in paragraph (b) of this section shall be used in the case of charter amendments involving minor changes. A proposed major amendment to the charter of an advisory committee established under general agency authority shall be submitted to the Committee Management Secretariat for review with an explanation of the purpose of the changes and why they are necessary.

(3) A committee charter that has been amended pursuant to this paragraph is subject to the filing requirements set forth in § 7.8.

(4) Amendment of an existing advisory committee charter pursuant to this paragraph does not constitute renewal of the committee for purposes of § 7.7.

6. In § 7.7, paragraphs (a)(3) and (b)(2) are revised to read as follows:

§ 7.7 Termination, renewal, and rechartering of advisory committees.

(a) * * *

(3) Its duration has been otherwise designated by law. The NRC Committee Management Officer shall notify the Committee Management Secretariat of the effective date of termination of any advisory committee that has been terminated by the NRC.

(b) * * *

(2) Any other NRC advisory committee may be renewed, provided that such renewal is carried out in compliance with the procedures set forth in § 7.5, except that an advisory committee established by the President may be renewed by appropriate action of the President and the filing of a new charter. Renewal of an NRC advisory committee shall not be deemed to terminate the appointment of any committee member who was previously appointed to serve on the committee.

7. Section 7.8 is revised to read as follows:

§ 7.8 Charter filing requirements.

No advisory committee may meet or take any action until a charter has been filed by the Committee Management Officer designated in accordance with § 7.10.

(a) To establish, renew, or reestablish a discretionary advisory committee, a charter must be filed with:

(1) The Commission;

(2) The Committee on Environment and Public Works of the United States Senate and the Committee on Energy and Commerce of the United States House of Representatives;

(3) The Library of Congress, Anglo-American Acquisitions Division, Government Documents Section, Federal Advisory Committee Desk, 101 Independence Avenue, SE., Washington, DC 20540–4172; and

(4) The Committee Management Secretariat, indicating the date the charter was filed with the congressional committees.

(b) Charter filing requirements for non-discretionary advisory committees are the same as those in paragraph (a) of this section, except the date of establishment for a Presidential advisory committee is the date the charter is filed with the Secretariat.

(c) Subcommittees that report directly to a Federal employee or agency must comply with this subpart.

8. Section 7.9 is revised to read as follows:

§ 7.9 Public notice of advisory committee establishment, reestablishment, or renewal.

(a) After the Commission has received notice from the Committee Management Secretariat that its review of a proposal to establish, reestablish, renew, or utilize an NRC discretionary advisory committee has been completed, the Commission shall publish a notice in the **Federal Register** that the committee is being established, reestablished, renewed, or utilized. In the case of a new committee, the notice shall also describe the nature and purpose of the committee and shall include a statement that the committee is necessary and in the public interest.

(b) Notices required to be published pursuant to paragraph (a) of this section shall be published at least 15 calendar days before the committee charter is filed pursuant to § 7.8, except that the Committee Management Secretariat may approve publication for less than 15 days for good cause shown. The 15-day advance notice requirement does not apply to advisory committee renewals, notices of which may be published concurrently with the filing of the charter.

9. In § 7.10, paragraphs (a), (b)(5), (b)(6), (b)(7) and (c)(2) are revised to read as follows:

§ 7.10 The NRC Advisory Committee Management Officer.

(a) The Chairman of the Commission or designee shall appoint an NRC Advisory Committee Management Officer to carry out the functions specified in paragraph (b) of this section.

(b) * * *

(5) Carry out, on behalf of the NRC, the provisions of the Freedom of Information Act (5 U.S.C. 552) and implementing NRC regulations (10 CFR part 9, subpart A) with respect to such reports, records, and other papers;

(6) Ensure that, subject to the Freedom of Information Act and implementing NRC regulations at 10 CFR part 9, subpart A, copies of the records, reports, transcript minutes, appendices, working papers, drafts, studies, agenda, or other documents that were made available to or prepared for or by each NRC advisory committee are available for public inspection and copying at the NRC Web site, *http://www.nrc.gov,* the NRC Public Document, or both, until the advisory committee ceases to exist;

(7) Ensure that, subject to the Freedom of Information Act and implementing NRC regulations, at least eight copies of each report made by each NRC advisory committee and, where appropriate, background papers prepared by consultants, shall be filed with the Library of Congress;

* * * * *

(c) * * *

(2) Copies of NRC's portion of the Committee Management Secretariat Annual Comprehensive Review of Federal advisory committees required by section 7(b) of the Act;

* * * * *

10. Section 7.11 is revised to read as follows:

§ 7.11 The Designated Federal Officer.

(a) The Chairman of the Commission or designee shall appoint a Designated Federal Officer or alternate Designated Federal Officer for each NRC advisory committee. The individual holding either position must be employed by the Federal Government on either a full-time or a permanent part-time basis.

(b) All meetings of an NRC advisory committee must be convened or approved by the committee's Designated Federal Officer or alternate, and the agenda for each committee meeting (except a meeting of a Presidential advisory committee) must be approved by that individual.

(c) An NRC advisory committee may not hold a meeting in the absence of its Designated Federal Officer or alternate.

(d) It shall also be the responsibility of the Designated Federal Officer or alternate to—

(1) Attend all meetings of the committee for which he or she has been appointed;

(2) Adjourn the meetings of the committee when such adjournment is in the public interest;

(3) Chair the meetings of the committee when so directed by the Commission;

(4) Ensure compliance with the requirements of § 7.13 regarding minutes of meetings of the committee; and

(5) Make copies of committee documents required to be maintained for public inspection and copying pursuant to § 7.14(b) and ensure their availability at the NRC Web site, *http://www.nrc.gov,* at the NRC Public Document Room, or both.

11. In § 7.12, paragraphs (a), (c), and (e) are revised, and paragraph (f) is added to read as follows:

§ 7.12 Public participation in and public notice of advisory committee meetings.

(a) Each meeting of an NRC advisory committee shall be held at a reasonable time and in a place reasonably accessible to the public, including persons with disabilities. Any advisory committee meeting conducted in whole or part by teleconference, video conference, the Internet, or other electronic medium must comply with this section. The size of the meeting room must be sufficient to accommodate advisory committee members, committee or agency staff, and interested members of the public, except that the provisions of this paragraph relating to the room size shall not apply to any part of an NRC advisory committee meeting that has been closed pursuant to § 7.15.

* * * * *

(c)(1) Except when the President or designee determines in writing that no notice should be published for reasons of national security, at least 15 days prior to an NRC advisory committee meeting, a notice that includes the following information shall be published in the **Federal Register:**

(i) The exact name of the advisory committee as chartered;

(ii) The time, date, place, and purpose of the meeting;

(iii) A summary of the agenda of the meeting;

(iv) Whether all or part of the meeting is open to the public; and

(v) The name and telephone number of the Designated Federal Officer, alternate, or other responsible agency employee who may be contacted for additional information concerning the meeting.

(2) If any part of the meeting is closed, the notice shall provide the reasons for the closure, citing the specific matter that has been determined to justify the closure under § 7.15. The Commission may publish a single notice announcing multiple meetings; however, a meeting may not be announced so far in advance as to prevent the public from being adequately informed of an NRC advisory committee's schedule.

* * * * *

(e) In addition to notice required by paragraph (c) of this section, the NRC may also use other forms of notice, such as press releases, posting the information on the NRC Web site, *http://www.nrc.gov,* or notice by mail, to inform the public of advisory committee meetings. To that end, the Designated Federal Officer or alternate for each NRC advisory committee will, to the extent practicable, maintain lists of people and organizations interested in that advisory committee and notify them of meetings by mail.

(f) Meetings of a subcommittee whose recommendations will not be reviewed by its parent advisory committee shall be conducted in accordance with all notice and openness requirements contained in this section and in §§ 7.13, 7.14, and 7.15.

12. In § 7.13, paragraph (c) is revised to read as follows:

§ 7.13 Minutes of advisory committee meetings.

* * * * *

(c) The chairperson of an NRC advisory committee shall certify the accuracy of the minutes of each of the committee's meetings.

* * * * *

13. Section 7.14 is revised to read as follows:

§ 7.14 Public information on advisory committees.

(a) The Nuclear Regulatory Commission shall maintain systematic information on the nature, functions, and operations of each NRC advisory committee. A complete set of the charters of NRC advisory committees and copies of the annual reports required by § 7.17(a) will be maintained for public inspection at either the NRC Web site, *http://www.nrc.gov,* the NRC Public Document Room, or both.

(b) Subject to the provisions of the Freedom of Information Act (5 U.S.C. 552) and NRC's Freedom of Information Act regulations at 10 CFR part 9, subpart A, copies of NRC advisory committees' records, reports, transcripts, minutes, appendices, working papers, drafts, studies, agenda, and other documents shall be maintained for public inspection and copying at the NRC Web site, *http://www.nrc.gov,* the NRC Public Document Room, or both. To provide the public a meaningful opportunity to comprehend fully the work undertaken by an NRC advisory committee, advisory committee records should be available to the public as soon as practicable. Members of the public or other interested parties may review non-exempt advisory committee records without filing a request for these records under the Freedom of Information Act.

(c) Official records generated by or for an advisory committee must be retained for the duration of the advisory committee. Upon termination of the advisory committee, the records must be processed in accordance with the Federal Records Act (44 U.S.C. Chapters 21, 29–33) and regulations issued by the National Archives and Records Administration (see 36 CFR parts 1220, 1222, 1228, and 1234), or in accordance with the Presidential Records Act (44 U.S.C. Chapter 22).

14. Section 7.15 is revised to read as follows:

§ 7.15 Procedures for closing an NRC advisory committee meeting.

(a) To close all or part of a meeting of an NRC advisory committee, the committee shall submit a written request for closure to the General Counsel, citing specific exemptions listed in the Government in the Sunshine Act (5 U.S.C. 552b), as implemented by 10 CFR 9.104, that justify the closure. The request shall provide the General Counsel sufficient time for review in order to make a determination prior to publication of the meeting notice pursuant to § 7.12.

(b) If the General Counsel finds that the request for closure is consistent with the provisions of the Government in the Sunshine Act and this part, a determination shall be issued in writing that all or part of the meeting will be closed. The determination shall include a statement of the reasons for the closing, citing the applicable exemptions in the Government in the Sunshine Act (as implemented by 10 CFR 9.104).

(c) Except when the President or designee determines in writing that no notice should be published for reasons of national security, the Secretary of the Commission shall make a copy of the determination to close all or part of an NRC advisory committee meeting available to the public upon request. If such a determination has been issued, the meeting notice published in the **Federal Register** should comply with the provisions of § 7.12 applicable to closed meetings.

§ 7.16 [Amended]

15. In § 7.16, amend paragraph (b) by removing the reference to ''7.27(a)'' and adding, in its place, a reference to ''7.17(a)''.

16. Section 7.17 is revised to read as follows:

§ 7.17 Reports required for advisory committees.

(a) The Commission shall furnish a report on the activities of NRC advisory committees annually to the Committee Management Secretariat on a fiscal year basis. The report must contain information regarding NRC advisory committees consistent with instructions provided by the Committee Management Secretariat. A copy of the report shall be made available at the NRC Web site, *http://www.nrc.gov,* at the NRC Public Document Room, or both. The information provided by the Commission regarding its advisory committees is contained in the Committee Management Secretariat's report which is available on its Web site, *http://www.gsa.gov/committeemanagement.*

(b) Any NRC advisory committee holding closed or partially closed meetings shall issue a report, at least annually, setting forth a summary of its activities consistent with the policy of the Government in the Sunshine Act (5 U.S.C. 552b), as implemented by 10 CFR 9.104. A copy of the report shall be made available at the NRC Web site, *http://www.nrc.gov,* at the NRC Public Document Room, or both.

(c) Subject to the Freedom of Information Act (5 U.S.C. 552) and implementing NRC regulations (10 CFR part 9, subpart A), eight copies of each report made by an advisory committee, including any report on closed meetings pursuant to paragraph (b) of this section, and, where appropriate, background papers prepared by consultants, shall be filed for public inspection and use with the Library of Congress, Anglo-American Acquisitions Division, Government Documents Section, Federal Advisory Committee Desk, 101 Independence Avenue, SE., Washington, DC 20540–4172.

17. Section 7.18 is revised to read as follows:

§ 7.18 Appointment, compensation, and expense reimbursement of advisory committee members, staffs, and consultants.

(a) Unless otherwise provided by law, advisory committee members serve at the pleasure of the Commission and their terms are at the sole discretion of the Commission.

(b) Except where otherwise provided by law, the Commission may accept the gratuitous services of an NRC advisory committee member, staff member, or consultant who agrees in advance to serve without compensation.

(c)(1) Subject to the provisions of paragraph (c)(2) of this section, if the Commission determines that compensation of a member of an NRC advisory committee is appropriate, the amount that will be paid shall be fixed by the Chairman of the Commission at a rate that is the daily equivalent of a rate in NRC's General Grade Salary Schedule, unless the member is appointed as a consultant and compensated at a rate applicable to NRC consultants.

(2) In determining an appropriate rate of pay for a member of an NRC advisory committee, the Chairman of the Commission shall give consideration to the significance, scope, and technical complexity of the matters with which the advisory committee is concerned and the qualifications required of the committee member; provided that the Chairman may not set the rate of pay for an NRC advisory committee member higher than the daily equivalent rate for level IV of the Executive Schedule under 5 U.S.C. 5315, unless a higher rate is expressly allowed by another statute. The Chairman may authorize a rate of basic pay in excess of the maximum rate of basic pay established for NRC's General Grade Salary Schedule. This maximum rate includes an applicable locality payment. The Commission may pay advisory committee members on either an hourly or a daily rate basis. The Commission may not provide additional compensation in any form, such as bonuses or premium pay. The Chairman may not delegate the responsibility for making a determination that a higher rate of pay than that established by NRC's General Grade Salary Schedule is necessary and justified for an NRC advisory committee member, and such a determination must be reviewed annually.

(d)(1) Each NRC advisory committee staff member may be paid at a rate that is the daily equivalent of a rate in NRC's General Grade Salary Schedule in which the staff member's position would appropriately be placed.

(2) A staff member of an NRC advisory committee may not be paid at a rate higher than the daily equivalent of the maximum rate for a GG–15 under NRC's General Grade Salary Schedule, unless the Chairman of the Commission determines that the staff member's position would appropriately be placed at a grade higher than GG–15, provided that in establishing rates of compensation, the Chairman shall comply with any applicable statutes, regulations, Executive Orders, and administrative guidelines. The Commission may provide advisory committee staff members with additional compensation, such as bonuses or premium pay, as long as the aggregate compensation does not exceed the rate of pay for Executive Schedule level IV.

(3) A Federal employee may serve as a staff member of an NRC advisory committee only with the knowledge of the advisory committee's Designated Federal Officer or alternate and the approval of the employee's direct supervisor. A staff member who is not otherwise a Federal employee shall be appointed in accordance with applicable agency procedures, following consultation with the advisory committee.

(e)(1) Subject to the limitations in paragraph (2), the following factors shall be considered in determining an appropriate rate of pay for a consultant to an NRC advisory committee:

(i) The qualifications required of the consultant, and

(ii) The significance, scope, and technical complexity of the work for which his services are required;

(2) The rate of pay for an NRC advisory committee consultant may not be higher than the maximum rate of basic pay established by NRC's General Grade Salary Schedule (that is, the GG–15, step 10 rate, excluding locality pay or any other supplement), unless a higher rate is expressly allowed by another statute. The appointment and compensation of NRC experts and consultants must be in conformance with applicable regulations issued by the United States Office of Personnel Management (see 5 CFR part 304).

(f) A member or staff member of an NRC advisory committee engaged in the performance of duties away from his or her home or regular place of business may be allowed travel expenses, including per diem in lieu of subsistence, as authorized by section 5703, title 5, United States Code, for persons employed intermittently in the Government service.

(g) Nothing in this section shall—

(1) Prevent any full-time Federal employee who provides services to an NRC advisory committee from receiving compensation at a rate at which he or she would otherwise be compensated as a full-time Federal employee.

(2) Prevent any individual who provides services to an NRC advisory committee, and who immediately before providing such services was a full-time Federal employee, from receiving compensation at a rate at which he or she was compensated as a full-time Federal employee.

(3) Affect a rate of pay or a limitation on a rate of pay that is specifically established by law or a rate of pay established under the NRC's General Grade Salary Schedule and evaluation system.

17. Section 7.19 is revised to read as follows:

§ 7.19 Advisory committee members with disabilities.

An NRC advisory committee member who is disabled may be provided services by a personal assistant while performing advisory committee duties, if the member—

(a) Qualifies as disabled under section 501 of the Rehabilitation Act of 1973 (29 U.S.C. 794); and

(b) Does not otherwise qualify for assistance under 5 U.S.C. 3102 by reason of being an employee of NRC.

17. Section 7.20 is revised to read as follows:

§ 7.20 Conflict of interest reviews of advisory committee members' outside interests.

The Designated Federal Officer or alternate for each NRC advisory committee and the General Counsel or designee shall review the interests and affiliations of each member of the Designated Federal Officer's advisory committee annually, and upon the commencement of the member's appointment to the committee, for the purpose of ensuring that such appointment is consistent with the laws and regulations on conflict of interest applicable to that member.

Dated at Rockville, Maryland, this 1st day of August 2002.

For the Nuclear Regulatory Commission.

Annette Vietti-Cook,

Secretary of the Commission.

[FR Doc. 02–19941 Filed 8–7–02; 8:45 am]

BILLING CODE 7590–01–P

SECURITIES AND EXCHANGE COMMISSION

17 CFR Parts 232, 240 and 249

[Release No. 34–46300; File No. S7–21–02]

RIN 3235–AI54

Certification of Disclosure in Companies' Quarterly and Annual Reports

AGENCY: Securities and Exchange Commission.

ACTION: Supplemental information on proposed rule.

SUMMARY: On July 30, 2002, President Bush signed into law the Sarbanes-Oxley Act of 2002. Section 302 of the Act requires us to adopt rules implementing specified statutory certification requirements for principal executive officers and principal financial officers by August 29, 2002. On June 14, 2002, we had proposed to require a specified certification by a company's principal executive officer and principal financial officer. In addition, we had proposed to require a company to maintain procedures to provide reasonable assurance that the company is able to collect, process and disclose the information required in the company's quarterly and annual reports, as well as current reports on Form 8–K, and also to require periodic review and evaluation of these procedures. This document contains supplemental information regarding those proposals in light of the enactment of the Sarbanes-Oxley Act of 2002.

DATES: You should send us any comments so that they arrive at the Commission by August 19, 2002. This is the same date by which we originally requested comment on the proposals included in Release No. 34–46079. In view of the statutory deadline by which we must adopt final rules, we encourage you to submit any comments as soon as possible since we do not expect to be able to consider comments that arrive after August 19, 2002.

ADDRESSES: Please send three copies of your comments to Jonathan G. Katz, Secretary, Securities and Exchange Commission, 450 Fifth Street, NW., Washington, DC 20549–0609. Alternatively, you may submit your comments electronically to the following electronic-mail address: *rule-comments@sec.gov.* To help us process and review your comments more efficiently, comments should be sent by one method (U.S. mail or electronic-mail) only. All comment letters should refer to File No. S7–21–02; please include this file number in the subject line if you use electronic-mail. We will make all comment letters available for public inspection and copying in our public reference room at the same address. We will post electronically submitted comment letters on the Commission's Internet Web site *(http://www.sec.gov).*[1]

FOR FURTHER INFORMATION CONTACT: Mark A. Borges, Special Counsel, or Elizabeth M. Murphy, Chief, Office of Rulemaking, Division of Corporation Finance, at (202) 942–2910, or, with respect to investment company matters, Tara L. Royal, Attorney, Office of Disclosure Regulation, Division of Investment Management, at (202) 942–0721, at the Securities and Exchange Commission, 450 Fifth Street, NW., Washington, DC 20549–0312.

SUPPLEMENTARY INFORMATION:

I. Background

On June 14, 2002, we proposed rules [2] that would require a company's principal executive officer and principal financial officer each to certify the contents of the company's quarterly reports on Forms 10–Q [3] and 10–QSB [4] and annual reports on Forms 10–K [5] and 10–KSB [6] filed pursuant to the Securities Exchange Act of 1934.[7] The proposed rules also would require a company filing quarterly and annual reports on these forms to maintain procedures to provide reasonable assurance that the company is able to collect, process and disclose the information required in these reports and in current reports on Form 8–K.[8] In addition, the proposed rules would require a periodic review and evaluation of these procedures. The annual evaluation would have to be presented to the company's principal executive officer and principal financial officer. They would have to certify in the company's annual report that they have reviewed the results of the evaluation.

On July 30, 2002, the Sarbanes-Oxley Act of 2002 was enacted.[9] Section 302 of the Act, entitled ''Corporate Responsibility for Financial Reports,'' requires the Commission to adopt final rules that must be effective by August 29, 2002, 30 days after the date of enactment, under which the principal executive officer or officers and the principal financial officer or officers, or persons providing similar functions, must provide a specified certification in issuers' annual and quarterly reports. Under the statute, the certification must be provided by the officers of a broader group of issuers, particularly foreign issuers, and is different in certain respects from the certification requirements that we proposed in June. The requirements under section 302 of the Act are set forth in section II of this document, and the principal differences between the form of certification required pursuant to section 302 of the Act and the form of certification set forth in our proposed rules are discussed in section III of this document.

To satisfy the requirements of the Sarbanes-Oxley Act of 2002, we plan to issue and make effective final rules on or prior to August 29, 2002 to require the certification mandated by the Act. However, given the specificity of the requirements of section 302, we wanted to alert interested parties to the rules that we will be required to adopt pursuant to section 302 and to the differences between those rules and our proposed rules.

II. Required Certification Under Section 302 of the Sarbanes-Oxley Act of 2002

Section 302(a) of the Sarbanes-Oxley Act of 2002 provides that the Commission shall, by rules that become effective not later than August 29, 2002, require, for each company filing periodic reports under section 13(a) or 15(d) of the Exchange Act,[10] that:

The principal executive officer or officers and the principal financial officer or officers, or persons performing similar functions, certify in each annual or quarterly report filed or submitted under either such section of such Act that—

(1) The signing officer has reviewed the report;

(2) based on the officer's knowledge, the report does not contain any untrue statement of a material fact or omit to state a material fact necessary in order to make the statements made, in light of the circumstances under which such statements were made, not misleading;

(3) based on such officer's knowledge, the financial statements, and other financial information included in the report, fairly present in all material respects the financial condition and results of operations of the issuer as of,

[1] We do not edit personal identifying information, such as names or electronic-mail addresses, from electronic submissions. You should only submit information that you wish to make publicly available.

[2] See Release No. 34–46079 (June 14, 2002) [67 FR 41877].

[3] 17 CFR 249.308a.

[4] 17 CFR 249.308b.

[5] 17 CFR 249.310.

[6] 17 CFR 249.310b.

[7] 15 U.S.C. 78a *et seq.*

[8] 17 CFR 249.308.

[9] Pub. L. 107–204, 116 Stat. 745 (2002).

[10] 15 U.S.C. 78m(a) or 78o(d).

and for, the periods presented in the report;

(4) the signing officers—

(A) are responsible for establishing and maintaining internal controls;

(B) have designed such internal controls to ensure that material information relating to the issuer and its consolidated subsidiaries is made known to such officers by others within those entities, particularly during the period in which the periodic reports are being prepared;

(C) have evaluated the effectiveness of the issuer's internal controls as of a date within 90 days prior to the report; and

(D) have presented in the report their conclusions about the effectiveness of their internal controls based on their evaluation as of that date;

(5) the signing officers have disclosed to the issuer's auditors and the audit committee of the board of directors (or persons fulfilling the equivalent function)—

(A) all significant deficiencies in the design or operation of internal controls which could adversely affect the issuer's ability to record, process, summarize, and report financial data and have identified for the issuer's auditors any material weaknesses in internal controls; and

(B) any fraud, whether or not material, that involves management or other employees who have a significant role in the issuer's internal controls; and

(6) the signing officers have indicated in the report whether or not there were significant changes in internal controls or in other factors that could significantly affect internal controls subsequent to the date of their evaluation, including any corrective actions with regard to significant deficiencies and material weaknesses.

III. Certain Differences From Our Certification Proposal

There are several substantive differences between the form of certification mandated by section 302 of the Sarbanes-Oxley Act of 2002 and the version that we proposed in June.[11] As indicated above, we will adopt a form of certification that conforms to the statutory requirements. Both our proposed form of certification and that required by the Act address the material accuracy and completeness of the periodic reports that they cover. However, our proposed form of certification used a ''plain English'' approach to reflect the applicable disclosure standard for ''material'' information,[12] while the Act uses the formulation found in Exchange Act Rules 10b–5(b)[13] and 12b–20.[14] In addition, the Act requires an additional attestation regarding the financial disclosure included in these reports. Further, while our proposed certification contains an attestation regarding the completion of a review of internal procedures and controls aimed at assuring adequate disclosure, the attestations required by the Act require additional information regarding certain aspects and results of that review.

There is also a difference regarding the companies to whom the certification requirements are applicable, in respect of foreign issuers. Our proposed rules would only have applied to issuers subject to the reporting requirements of section 13(a) or 15(d) of the Exchange Act that filed annual reports on Forms 10–K and 10–KSB and quarterly reports on Forms 10–Q and 10–QSB. Thus, our proposed rules would have applied to U.S. companies and to companies domiciled in foreign jurisdictions that have a majority of U.S. security holders and U.S.-based businesses or management. Section 302 of the Act, however, also applies to foreign private issuers.[15] We, therefore, intend to adopt final rules that would apply the certification requirement to foreign private issuers filing annual reports on Form 20–F[16] and Canadian issuers filing Form 40–F[17] under the Commission's Multijurisdictional Disclosure System.[18]

While section 302 of the Act requires the principal executive officer or officers and principal financial officer or officers to make specific attestations in their certifications as to the company's internal controls, it does not directly address the maintenance of these requirements. Our proposed rules would require maintenance of sufficient procedures to provide reasonable assurance that the company is able to collect, process and disclose, within the time periods specified in our rules and forms, the information, including non-financial information, required to be disclosed in their periodic and current reports. We do not propose to modify, and continue to solicit comment on, our proposed Rules 13a–15(a) and 15d–15(a) that would impose this requirement.

We are considering the manner of application of section 302 of the Act to registered investment companies. We ask commenters to address the manner in which the certification requirement should address registered investment companies, including the appropriate location for the certification (for example, Form N–SAR;[19] reports to shareholders), the appropriate individuals to provide the certification (for example, officers of the investment company itself and/or the investment adviser, administrator or depositor of the registered investment company), how the rule should apply to different types of investment companies (for example, managed investment companies; unit investment trusts) and any other matters that are specific to registered investment companies.

IV. Request for Comment

As indicated above, we continue to solicit comment on proposed Rules 13a–15(a) and 15d–15(a), as proposed on June 14, 2002 in Release No. 34–46079.

Dated: August 2, 2002.

By the Commission.

Margaret H. McFarland,

Deputy Secretary.

[FR Doc. 02–20029 Filed 8–2–02; 4:48 pm]

BILLING CODE 8010–01–P

[11] Section 906 of the Sarbanes-Oxley Act of 2002 adds new section 1350 to chapter 63 of title 18 of the United States Code. Section 1350 requires a written statement to accompany all periodic reports filed with us that contain financial statements. This release does not relate to section 906 of the Act, which, by its terms, is effective on enactment of the Act, July 30, 2002.

[12] See Release No. 34–46079 at section II.2.

[13] 17 CFR 240.10b–5(b)

[14] 17 CFR 240.12b–20.

[15] For purpose of the Exchange Act, a ''foreign private issuer'' is any foreign issuer (other than a foreign government) except an issuer meeting the following conditions: (1) more than 50% of the issuer's outstanding voting securities are directly or indirectly held of record by residents of the U.S.; and (2) the majority of the executive officers or directors are U.S. citizens or residents; or more than 50% of the assets of the issuer are located in the U.S.; or the business of the issuer is administered principally in the U.S. See Exchange Act Rule 3b–4(c) [17 CFR 240.3b–4(c)].

[16] 17 CFR 249.220f.

[17] 14 CFR 240.240f.

[18] Section 302(b) of the Sarbanes-Oxley Act of 2002 states that nothing in the section can be interpreted or applied in any way to allow any issuer to lessen the legal force of the certification required by the Act by an issuer that has reincorporated or engaged in any other transaction resulting in the transfer of the corporate domicile or offices of the issuer from inside of the United States to outside of the United States. Our rules as adopted will, of course, assure complaicne with this requirement by applying the certification requirement to all reporting companies, including any issuer that would seek to lessen the legal force of the certification as described above.

[19] 17 CFR.330; 17 CFR 274.101.

SECURITIES AND EXCHANGE COMMISSION

17 CFR Part 242

[Release Nos. 33–8119; 34–46301; File No. S7–30–02]

RIN 3235–AI60

Regulation Analyst Certification

AGENCY: Securities and Exchange Commission.

ACTION: Proposed rule.

SUMMARY: The Commission is seeking public comment on proposed Regulation Analyst Certification. The proposed regulation would require that any research report disseminated by broker or dealer include certifications by the research analyst that the views expressed in the research report accurately reflect the analyst's personal views, and whether the analyst received compensation or other payments in connection with his or her specific recommendations or views. A research analyst would also be required to provide certifications and disclosures in connection with public appearances. Although research analysts are often viewed by investors as experts and as important sources of information about the securities and companies they cover, many factors can create pressure on their independence and objectivity. By requiring these certifications and disclosures, the proposed regulation should promote the integrity of research reports and investor confidence in the recommendations contained in those reports.

DATES: Comments must be received on or before September 23, 2002.

ADDRESSES: To help us process and review your comments more efficiently, comments should be sent by one method only.

Persons wishing to submit written comments should send three copies to Jonathan G. Katz, Secretary, Securities and Exchange Commission, 450 Fifth Street, NW., Washington, DC 20549–0609. Comments also may be submitted electronically at the following E-mail address: *rule-comments@sec.gov*. All comment letters should refer to File No. S7–30–02. Comments submitted by E-mail should include this file number in the subject line. Comment letters received will be available for public inspection and copying in the Commission's Public Reference Room, 450 Fifth Street, NW., Washington, DC 20549. Electronically submitted comment letters will be posted on the Commission's Internet Web site (*http://www.sec.gov*). The Commission does not edit personal, identifying information, such as names or e-mail addresses, from electronic submissions. Submit only the information you wish to make publicly available.

FOR FURTHER INFORMATION CONTACT: James Brigagliano, Thomas Eidt, or Racquel Russell in the Office of Risk Management and Control, Division of Market Regulation, at (202) 942–0772.

SUPPLEMENTARY INFORMATION: We are proposing new Regulation Analyst Certification (''Regulation AC'')[1] under the Securities Act of 1933 (''Securities Act'') and the Securities Exchange Act of 1934 (''Exchange Act'').

I. Introduction

Research analysts study publicly-traded companies and make recommendations about the securities of those companies, often through the issuance of research reports. Analysts typically work for full-service broker-dealers[2] and, as such, are ''persons associated with a broker or dealer.''[3] The Commission has stated that analysts, who ''ferret out and analyze information,'' play an important role in the securities markets.[4]

Research analysts at full-service brokerage firms, so called sell-side analysts, are often viewed by investors as experts and as important sources of information about the securities and the companies they cover.[5] At the same time, however, many factors can create pressure on an analyst's independence and objectivity. Among other things, investment banking relationships and certain compensation arrangements may adversely affect analyst objectivity and, as a result, the integrity of the views expressed in research reports and public appearances.

Proposed Regulation AC seeks to address these concerns by requiring broker-dealers issuing research reports to include clear and prominent certifications by the research analysts that the research report accurately reflects the analyst's personal views about the subject securities and issuers and whether the analyst received compensation for views or specific recommendations in the research report. The proposed regulation would also require the analyst to make quarterly certifications that the views expressed by the analyst in public appearances accurately reflected the analyst's personal views and whether or not he or she received any related compensation for his or her views or recommendations. In so doing, the proposed regulation should promote the integrity of research reports and investor confidence in the research analyst's recommendations contained in those reports.

II. Proposed Rule

A. Reasons for Proposal

During 1999, the Commission and Congress began to examine research analysts' conflicts of interest in greater depth. The Commission was particularly concerned that many investors who rely on analysts' recommendations may not know, among other things, that favorable research could be used as a component of the marketing of investment banking services provided by the analyst's firm, and that analyst compensation may be based significantly on generating investment banking business.

Beginning in the summer of 1999, Commission staff began a review of industry practices regarding disclosure of research analyst conflicts of interest. Commission staff conducted on-site examinations of full-service broker-dealers that focused on analysts' financial interests in companies they cover, reporting structures (in particular whether analysts report to investment banking personnel) and analyst compensation arrangements. In June and July 2001, the Subcommittee on Capital Markets, Insurance and Government Sponsored Enterprises of the House of Representatives' Committee on Financial Services held hearings on research analyst conflict of interest issues.[6] In addition, also in July 2001, the staff of the Commission's Office of Investor Education and Assistance issued an Investor Alert highlighting the numerous biases that may affect analyst recommendations.[7] The Senate Committee on Governmental Affairs held a hearing on analysts on February 27, 2002.[8]

[1] 17 CFR 242.500 through 502.

[2] Full-service broker-dealers provide a wide range of services to clients, including investment banking, financial planning, and other financial services.

[3] *See* Exchange Act Section 3(a)(18).

[4] *Dirks* v. *SEC,* 463 U.S. 646, 658 (1983). *See also* Securities Act Release No. 7606A (November 13, 1998), 63 FR 67174 (December 4, 1998).

[5] Sell-side analysts typically work for full-service broker-dealers that sell securities to the public and make recommendations on the securities they cover. Many of the more popular sell-side analysts work for prominent brokerage firms that also provide investment banking services for corporate clients—including companies whose securities the analysts cover.

[6] *Analyzing the Analysts: Hearings Before the Subcomm. on Capital Markets Insurance and Government Sponsored Enterprises of the House Comm. on Financial Services* (June 14 and July 31, 2001).

[7] *See www.sec.gov/investor/pubs/analysts.htm.*

[8] *The Watchdogs Didn't Bark: Enron and the Wall Street Analysts: Hearing Before the Senate Comm. on Governmental Affairs* (February 27, 2002).

On April 25, 2002, the Commission announced the commencement of a formal inquiry into market practices concerning research analysts and the personal conflicts that can arise from the relationship between research and investment banking.[9] Further, on May 10, 2002, the Commission approved rule changes proposed by the National Association of Securities Dealers (''NASD'') and the New York Stock Exchange (''NYSE'') relating to research analyst conflicts of interest.[10] The NASD and NYSE filed these rule changes with the Commission in February 2002. New NASD Rule 2711 and amended NYSE Rule 472 established standards governing member broker-dealer communications with the public to address research analyst conflicts of interest. Specifically, the rules contain, among other things:

- A prohibition on tying analyst compensation to specific investment banking transactions;
- A prohibition on offering favorable research to induce firm business;
- Restrictions on personal trading by analysts in securities of companies followed by the analyst; and
- Requirements mandating increased disclosures of conflicts of interest in research reports and public appearances, such as business relationships with, compensation from, or ownership interests in the company that is the subject of the research report.

New NASD Rule 2711 and amended NYSE Rule 472 also require that members attest annually that the member has adopted and implemented written supervisory procedures reasonably designed to ensure that employees comply with the provisions of the rule. These SRO rules close regulatory gaps and take a significant step toward restoring investor confidence in the role of sell-side research in the capital markets. However, it is possible that the Commission's formal inquiry may indicate the need for further SRO rule changes or additional Commission action. Moreover, the Commission has requested that the NASD and NYSE report within a year of implementing these rules on their operation and effectiveness, and whether they recommend any changes or additions to the rules.

Proposed Regulation AC is part of an ongoing process by the Commission to address conflicts of interest affecting the production and dissemination of research by securities firms, and to provide increased disclosure to investors. The Commission encourages brokers, dealers, and persons associated with brokers and dealers, to consider voluntarily implementing the types of disclosures that proposed Regulation AC, if adopted, would require. The Commission will continue its efforts to determine whether any additional action may be necessary to improve the integrity of research and to restore investor confidence.[11]

B. Description of Proposal

We propose new Regulation AC to further address conflicts of interest faced by research analysts and their firms. The proposed regulation would require certification by ''research analysts'' that the views they express in ''research reports'' and ''public appearances'' accurately reflect their personal views about the subject securities and issuers. Analysts would also have to disclose whether they received compensation for their specific recommendations or views. The proposed regulation defines ''research report'' as ''a written communication that includes an analysis of securities of an issuer or issuers, provides information reasonably sufficient upon which to base an investment decision and includes a recommendation.'' Proposed Regulation AC requires certain certifications and disclosures regarding a ''public appearance,'' which is defined as ''any participation in a seminar, forum (including an interactive electronic forum), radio or television interview, or other public speaking activity in which a research analyst makes a specific recommendation or offers an opinion concerning a security or an issuer.'' ''Research analyst'' is defined as ''any natural person who is principally responsible for the analysis of any security or issuer included in a research report.''

Proposed Regulation AC would require that broker-dealers and persons associated with broker-dealers include in their research reports:

- A statement by the research analyst certifying that the views expressed in the research report accurately reflect such research analyst's personal views about the subject securities and issuers;
- A statement by the research analyst certifying that no part of his or her compensation[12] was, is, or will be directly or indirectly related to the specific recommendation or views contained in the research report; or
- A statement by the research analyst certifying that part or all of his or her compensation was, is, or will be directly or indirectly related to the specific recommendation or views contained in the research report. If the analyst did receive such related compensation, the statement must include the source and amount of such compensation, and the purpose of the compensation, and further disclose that such compensation may influence the recommendation in the research report;
- All certifications must be clear and prominent.[13]

Additionally, under proposed Regulation AC, broker-dealers must make a record related to public appearances by research analysts.[14] Specifically, a broker-dealer who publishes, circulates, or provides, directly or indirectly, a research report by a research analyst, would be required to make a record within thirty days after each calendar quarter in which the research analyst made the public appearance, that includes:

- A written statement by the research analyst certifying that the views expressed in each public appearance accurately reflected such research analyst's personal views about the subject securities and issuers; and
- A written statement by the research analyst certifying that no part of such research analyst's compensation was, is, or will be directly or indirectly related to any specific recommendations or views expressed in any public appearance.

In cases where the analyst is unable to make the certifications in connection with public appearances as described above, the broker-dealer must make, keep, and maintain a record of a statement from the research analyst that he or she is unable to provide the written certifications specified in Rule 502 (a)(1) of proposed Regulation AC

[9] *See www.sec.gov/news/press/2002–56.htm.*

[10] *See* Securities Exchange Act Release No. 45908 (May 10, 2002), 67 FR 34968 (May 16, 2002).

[11] We note that the recently-enacted Sarbanes-Oxley Act of 2002 directs the Commission to conduct rulemaking, itself or through the SROs, to address a broad range of issues stemming from analysts conflicts. *See* Sarbanes-Oxley Act of 2002, Public Law 107–204. The Commission voted to propose Regulation AC on July 24, 2002, before the passage of the Act. The Commission will, of course, abide by the directives of the Act as it continues to address analyst conflicts of interest issues, including with respect to the possible adoption of Regulation AC.

[12] The Commission notes that the term ''compensation,'' for the purposes of Regulation AC, would also include payments received from sources other than the research analyst's employer, including issuers, underwriters, dealers, and other related persons.

[13] The Commission would expect that the required certifications be included on the front page of the research report, or that the front page would specify the page or pages on which each certification is found.

[14] If an associated person of a broker-dealer publishes a research report, the broker-dealer would be required to make and keep the mandated records.

and the reasons therefor. The broker-dealer must also disclose in all research reports for the next 120 days that the research analyst did not comply with the certification requirements specified in Rule 502 (a)(1) of proposed Regulation AC and the reasons therefor. It should be noted that the 120 day disclosure period prescribed in paragraph (a)(2) of proposed Rule 502, which is longer than a calendar quarter, runs from the time the analyst notifies the broker-dealer employer that he or she is unable to provide the written certifications specified in paragraph (a)(1). The broker-dealer must also promptly provide copies of statements that the analyst is unable to provide the certifications in connection with public appearances to its examining authority, designated pursuant to section 17(d) of the Exchange Act and Rule 17d–2 thereunder. Further, broker-dealers must keep and maintain these records pursuant to Rule 17a–4(b)(4).

Proposed Regulation AC is intended to complement other rules governing conflicts of interest disclosure by research analysts, including NYSE Rule 472 and NASD Rule 2711. We note that SRO rules currently address an analyst who writes a research report that does not reflect his or her personal views, even if the analyst states that the report does not reflect his or her views. Thus, we do not see a need to allow for a negative certification concerning an analyst's personal views. Should Regulation AC also provide an analyst a negative certification option that the views expressed in the research report do not accurately reflect his or her personal views? Similarly, given that SRO rules currently prohibit an analyst from receiving compensation for a specific investment banking transaction, is it necessary or desirable for Regulation AC to permit an analyst to disclose the receipt of compensation for a specific recommendation?

The scope of proposed Regulation AC is broader than the scope of the current SRO rules in that the proposed regulation covers debt as well as equity securities. We believe that some of the same concerns regarding analyst conflicts also pertain to debt securities. Thus, we propose to coverer debt securities in the regulation. In addition, we understand that the SROs are considering expanding the coverage of their rules regarding analyst research reports to cover debt securities.

Proposed Regulation AC focuses on core issues of analysts' integrity: their beliefs in their recommendations and the influence of compensation on their recommendations. It is important for an investor to know whether an analyst potentially is biased with respect to securities or issuers that are the subject of a research report. Further, in evaluating a research report, it is reasonable for an investor to want to know about an analyst's compensation. We believe that proposed Regulation AC is reasonably designed to prevent acts and practices that are fraudulent, deceptive, or manipulative. The proposed regulation does not preclude an analyst from providing services to his or her firm's investment banking department within the requirements of governing SRO rules, and it does not prohibit analysts generally from receiving compensation for covering issuers or for preparing research reports. Rather, proposed Regulation AC focuses on disclosure where the analyst is compensated for making a specific recommendation or rating. The Commission also notes that the proposed regulation is intended to address analysts' beliefs about their expressed views and recommendations, not the accuracy of the recommendations or opinions regarding securities discussed. Proposed Regulation AC also does not impose new liability. Even without proposed Regulation AC, analysts may be found to have violated the anti-fraud provisions of the federal securities laws if they make baseless recommendations or recommendations that they disbelieve.[15] Regulation AC is not intended to create duties under section 10(b) of the Exchange Act. As a result, no private liability will arise from a broker, dealer, or associated person's failure to make the required disclosure, or make, keep, and maintain required records.

III. General Request for Comment

We encourage any interested person to submit written comments on all aspects of the proposed regulation. In particular, we request comment on:

- Would the proposed certification and disclosure requirements, if adopted, promote investor confidence in the views expressed by research analysts and provide investors with useful information with which to evaluate potential biases?
- Would the required disclosures and certifications reduce public appearances by analysts and the amount of useful information available to investors?
- Should the proposed definitions of ''research report,'' ''research analyst,'' or ''public appearance'' be broader or narrower than proposed?[16]
- Should the proposed definition of ''research report'' be limited to cover only equity securities?
- What disclosures, if any, should be required during public appearances? We also request comment on whether the proposed requirements relating to public appearances should also apply to research analyst's recommendations in the print media.
- Broker-dealers often choose to publish research reports that cover multiple issuers, securities, or an industry segment, in a compendium report. Certain portions of the NASD and NYSE rules permit different treatment of these compendium reports. Should the regulation make allowances for compendium research reports covering six or more securities? For example, should a broker-dealer be permitted to publish the required disclosures for such a compendium in a place other than the research report?
- If a research analyst is unable to provide the certifications relating to public appearances in Rule 502(a)(1) and instead provides the certifications in Rule 502(a)(2), the broker-dealer is required to disclose that fact in all research reports for 120 days after the analyst has provided his or her certification under Rule 502(a)(2). Is 120 days the appropriate amount of time the broker-dealer should be required to make such disclosure? Should the disclosure period be longer or shorter?
- Are the recordkeeping requirements of Regulation AC appropriate?
- What additional procedures would firms need to put in place in order to ensure compliance with the proposed regulation, beyond those already established or that will be established to comply with the recently-approved SRO rules?
- The application of proposed Regulation AC broadly covers brokers or dealers and any person associated with a broker or dealer because we believe that these entities are subject to the greatest conflicts. We request comment on whether the proposed regulation should cover banks that are not associated persons and other independent entities. Are there certain classes of persons associated with a broker-dealer that should not be subject to the rule? Should the rule explicitly exclude investment advisers?

[15] Regulation AC does not alter or effect any other existing obligation under the federal securities laws for research analysts or broker-dealers.

[16] For example, we note the term research analyst would not include an investment adviser, such as a mutual fund portfolio manager, who is not principally responsible for preparing research reports, even if the investment adviser is a registered person of a member. *See* Joint Memorandum of the NASD and the New York Stock Exchange. Discussion and Interpretation of Rules Governing Research Analysts and Research Reports (NASD Rule 2711 and NYSE Rules 351 and 472) at 3.

• Would the required disclosures be utilized by investors if they are not on the cover page, given the numerous other disclosures that firms must make?

• Should Rule 501 of proposed Regulation AC allow for a statement that the research analyst is ''unable to provide the written certifications required,'' similar to Rule 502?

• Should Rule 502 require research analysts to provide their employers with a list identifying each public appearance made during the calendar quarter?

We solicit comment on our approach and the specific proposed certifications and disclosures. The Commission encourages commenters to provide information regarding the advantages and disadvantages of the proposed regulation.

IV. Paperwork Reduction Act

The proposed regulation contains ''collection of information'' requirements within the meaning of the Paperwork Reduction Act of 1995 (''PRA'').[17] We will submit the proposal to the Office of Management and Budget (''OMB'') for review in accordance with the PRA.[18] The Commission is proposing to create a new information collection entitled ''Regulation AC—Analyst Certification.'' An agency may not conduct or sponsor, and a person is not required to respond to, an information collection unless it displays a currently valid OMB control number.

A. Summary of Collection of Information

Proposed Regulation AC, if adopted, would require that any research report published, circulated, or provided by a broker or dealer or person associated with a broker or dealer contain a statement attesting to the fact that the views expressed in each research report accurately reflect the analyst's personal views and whether or not the research analyst received or will receive any compensation in connection with the views or recommendations in the research report. The proposed regulation would also require broker-dealers to, on a quarterly basis, make, keep, and maintain records of research analyst statements regarding whether the views expressed in public appearances accurately reflected the analyst's views, and whether any part of the analyst's compensation is related to the specific recommendation or views expressed in the public appearance.

B. Reporting and Cost Burden Estimates

The proposed regulation would provide that broker-dealers, and persons associated with broker-dealers, must include in research reports they publish certain certifications and disclosures about the analyst's views expressed in the research reports and any relationship between the analyst's compensation and the specific recommendations or views expressed. The proposed regulation would also require broker-dealers to make, keep, and maintain records of research analyst certifications and disclosures in connection with public appearances.

The staff of the Commission believes that the average amount of time it would take a broker-dealer to include the required certifications and disclosures in each research report is one minute per report. The Commission staff estimates that broker-dealers publish approximately 657,000 research reports per year.[19] Therefore, the Commission estimates that the total annual burden in hours for all broker-dealers to comply with the research report certification and disclosure requirements of the proposed regulation is approximately 10,950 hours per year [(1 minute × 657,000 reports) / 60 minutes]. The Commission staff expects that research analysts will likely be the employees primarily charged with executing certifications and including them in research reports. According to industry sources, research analysts, on average, earn $189,250 per year, for an hourly pay rate of approximately $90. Including 35% overhead, Commission staff estimates that the hourly pay rate for a research analyst would be approximately $121.50. Therefore, the Commission estimates that the total annual burden in dollars of complying with the research report certification and disclosure requirements is approximately $1,330,425 per year [10,950 hours × $121.50 per hour].

The staff of the Commission believes that the average amount of time it would take a research analyst to prepare the quarterly statements regarding public appearances as required by the proposed regulation is ten minutes per analyst. The staff of the Commission believes that, on average, approximately 519 public appearances by research analysts occur per quarter,[20] or about 2,076 per year. Therefore, the Commission believes that the total annual burden in hours of complying with the public appearance certification and disclosure requirements would be approximately 346 hours per year [(10 minutes × 2076 appearances) / 60 minutes].

In cases where the analyst is unable to make the certifications in connection with public appearances as specified in Rule 502 (a)(1) of proposed Regulation AC, the firm is required to make, keep, and maintain a record of a statement from the research analyst that he or she is unable to make the specified certifications, and the reasons therefor, and to provide copies of that statement to its examining authority. The staff of the Commission believes that there will be few, if any, instances where a broker-dealer will provide copies of statements to their examining authority, as analysts and their firms will have strong incentives to avoid having to make the type of disclosures required to be provided to their examining authority. Therefore, the total annual burden, in dollars, of complying with the public appearance certification requirements would be approximately $42,039 [2,076 appearances × $20.25 pay per 10 minutes].

The proposed regulation requires that the records of statements regarding public appearances submitted by research analysts to their broker-dealers be preserved in accordance with Exchange Act Rule 17a–4(b)(4). Exchange Act Rule 17a–4(b)(4) requires that any communication relating to a broker-dealer's business, including inter-office communications, must be kept for at least three years. In light of the existing record preservation requirement for brokers and dealers under Exchange Act Rule 17a–4(b)(4),[21] the staff of the Commission believes that any additional costs to preserve the records of the certifications required by the proposed regulation would be minimal.

Proposed Regulation AC, if adopted, would require that brokers and dealers establish and follow sufficient procedures to comply with the provisions of the proposed regulation and would require that the broker or dealer is able to: collect, process, and disclose the information required to be included in research reports; ensure the submission of information required to be submitted to the firm's compliance department; and periodically review and evaluate these procedures. Brokers or dealers should already have these procedures in place to meet existing obligations under the SRO rules relating

[17] 44 U.S.C. 3501 *et seq.*

[18] 44 U.S.C. 3507(d) and 5 CFR 1320.11.

[19] Based on data provided by First Call, the staff of the Commission estimates that approximately 657,000 research reports were published in 2001.

[20] 519 is approximately 10% of the estimated 5,186 research analysts employed in the U.S., which is based on information provided by Nelson Information.

[21] OMB Control No. 3235–0279.

to research analysts that recently were approved by the Commission.[22] Therefore, the Commission estimates that the proposed regulation would result in a total annual time burden of approximately 11,296 hours [10,950 hours to comply with research report requirements + 346 hours to comply with public appearance requirements], and a total annual cost in dollars of approximately $1,372,464 [$1,330,425 to comply with the research report requirements + $42,039 to comply with the public appearance requirements].

C. Request for Comment

The Commission solicits comments in order to: (i) Evaluate whether the proposed collection of information is necessary for the proper performance of the functions of the agency, including whether the information shall have practical utility; (ii) evaluate the accuracy of the Commission's estimate of the burden of the proposed collection of information; (iii) determine whether there are ways to enhance the quality, utility, and clarity of the information to be collected; and (iv) evaluate whether there are ways to minimize the burden of the collection of information on those who are to respond, including through the use of automated collection techniques or other forms of information technology. We also request comment on how many public appearance certifications would likely be submitted to brokerage firms per quarter, and how many of those statements would be required to be provided to the firm's examining authority.

Persons submitting comments on the collection of information requirements should direct them to the Office of Management and Budget, Attention: Desk Officer for the Securities and Exchange Commission, Office of Information and Regulatory Affairs, Washington, DC 20503, and should also send a copy of their comments to Jonathan G. Katz, Secretary, Securities and Exchange Commission, 450 Fifth Street, NW., Washington, DC 20549–0609, with reference to File No. S7–30–02. Requests for materials submitted to OMB by the Commission with regard to this collection of information should be in writing, refer to File No. S7–30–02, and be submitted to the Securities and Exchange Commission, Records Management, Office of Filings and Information Services. OMB is required to make a decision concerning the collections of information between 30 and 60 days after publication. Consequently, a comment to OMB is best assured of having its full effect if OMB receives it within 30 days of publication.

V. Costs and Benefits of the Proposed Rule

The Commission is considering the costs and the benefits of proposed Regulation AC. The Commission encourages commenters to discuss any costs or benefits in addition to those discussed below. In particular, the Commission requests comment on any potential costs, as well as any potential benefits, resulting from the proposals for investors, issuers, broker-dealers, other securities industry professionals, SROs, or others. Commenters should provide analysis and data to support their views on the costs and benefits associated with the proposed amendments.

A. Benefits

We believe that investor confidence in the integrity of research has suffered because some investors may believe that research analyst objectivity has been compromised due to, among other things, analysts' personal compensation and firms' investment banking relationships with issuers that are the subjects of research reports. Requiring that research analysts certify that the views expressed in research reports reflect their personal views, and requiring disclosure of information regarding whether analyst compensation is related to the specific recommendations made, would help bolster investor confidence in the quality of research. This, in turn, should help bolster investor confidence in the securities markets.

Proposed Regulation AC would require that broker-dealers include certifications in research reports regarding the accuracy of the views expressed in the research report. Firms would be required to include in their research reports certifications that the views expressed in the research report accurately reflect the analyst's personal views regarding the subject securities or issuers and whether or not the analyst received compensation in connection with the reports. Many investors rely on the research reports and recommendations provided by their brokers. To the extent that the proposed regulations require disclosures that provide more transparency than provided by current regulation, these disclosures should provide investors with important information with which to determine the value of the research available to them.

Proposed Regulation AC may result in an increase in the overall quality of the research available to the public because a broker-dealer would be in violation of the securities laws when issuing research reports unless the reports include the required certifications and disclosures. The proposed requirement that the research analyst principally responsible for preparing the research report personally certify that the views expressed in the report accurately reflect his or her personal views creates an incentive for analysts to examine, even more carefully, the basis and foundations for his or her recommendations in preparing research reports.

Proposed Regulation AC may also result in an increase in the quality of research because of competitive reasons. Firms that publish research reports that do not contain certain analyst certifications will be in violation of the proposed regulation, and firms whose research analysts' compensation is related to the specific recommendations or views provided in research reports may lose some business to firms that are less conflicted. The proposed regulation is intended to enhance investor confidence in the integrity of the research available to them. We believe that by requiring research analysts to certify as to the accuracy of the views expressed in research reports, investor confidence in the securities markets should be enhanced, thereby leading to the benefit of more liquid and efficient markets. These benefits are difficult to quantify.

B. Costs

While the proposed regulation may lead to some additional costs for brokers or dealers, we believe that any costs should not be significant. The proposed certification and disclosure requirements would require research analysts to even more carefully consider the accuracy of the views expressed in research reports and public appearances, to consider their compensation arrangements, and then to make the required certifications and disclosures. In light of current requirements under SRO rules, the Commission estimates that, beyond the paperwork costs described above, any additional costs that would result from the required certifications and disclosures would be minimal.

Moreover, with respect to the compensation certifications and disclosures that would be required by proposed Regulation AC, brokers and dealers are already required to make certain disclosures regarding research analyst compensation under SRO rules.[23] Additionally, Exchange Act Rule 17a–3(a)(19) currently requires

[22] *Supra* note 10.

[23] *See* NASD Rule 2711 and NYSE Rule 472.

brokers or dealers to maintain a record of all agreements pertaining to the relationship between each associated person and the broker-dealer, including a summary of each associated person's compensation arrangement or plan.[24] Brokers or dealers should also already have in place procedures necessary to comply with many components of the proposed regulation due to existing obligations under SRO rules, although these procedures might require some minor modifications to conform with proposed Regulation AC. As noted previously, the Commission estimates that the annual paperwork costs in dollars of complying with the proposed regulation would be approximately $1,372,464.

C. Request for Comments

As an aid in evaluating costs associated with proposed Regulation AC, the Commission requests the public's views and any supporting information. We request comment on all aspects of this cost-benefit analysis, including identification of any additional costs or benefits of, or suggested alternatives to, the proposed regulation. Commenters are requested to provide empirical data and other factual support for their views to the extent possible.

VI. Regulatory Flexibility Act Certification

The Commission certifies, pursuant to 5 U.S.C. 605(b), that the proposed regulation would not, if adopted, have a significant economic impact on a substantial number of small entities. The purpose of the proposed regulation is to increase analyst independence; further manage conflicts of interest; require increased disclosures to investors; and promote investor confidence in the integrity of research. By improving the quality of disclosure, the proposed regulation should enhance investor confidence in the fairness and integrity of the securities markets. The requirements of the proposed regulation are closely related to information, procedures, and disclosures required by existing SRO rules, which apply to both large and small broker-dealers that publish or circulate research reports.

The Division of Market Regulation estimates that the total burden in hours required to comply with proposed Regulation AC would, at most, be approximately two hours and two minutes per small firm. Accordingly, the Commission certifies that proposed regulation should not have a significant impact on a substantial number of small entities.

VII. Consideration of Impact on the Economy

For purposes of the Small Business Regulatory Enforcement Fairness Act of 1996, or ''SBREFA,''[25] we must advise OMB as to whether the proposed regulation constitutes a ''major'' rule. Under SBREFA, a rule is considered ''major'' where, if adopted, it results or is likely to result in:

- An annual effect on the economy of $100 million or more (either in the form of an increase or a decrease);
- A major increase in costs or prices for consumers or individual industries; or
- Significant adverse effects on competition, investment or innovation.

Where a rule is ''major,'' its effectiveness will generally be delayed for 60 days pending Congressional review. We request comment on the potential impact of the proposed regulation on the economy on an annual basis. Commenters are requested to provide empirical data and other factual support for their views to the extent possible.

VIII. Effects on Competition, Efficiency and Capital Formation

Section 3(f) of the Exchange Act[26] requires us, when engaging in rulemaking where we are required to consider or determine whether an action is necessary or appropriate in the public interest, to consider whether the action will promote efficiency, competition, and capital formation. In addition, section 23(a)(2)[27] of the Exchange Act requires the Commission to consider the impact any rule would have on competition. Further, the law requires that the Commission not adopt any rule that would impose a burden on competition not necessary or appropriate in furtherance of the purposes of the Exchange Act.

The proposed regulation is intended to enhance investor confidence in the integrity of the research available to them. We believe that requiring broker-dealers to include analyst certifications in research reports, as well as the other disclosures required by proposed Regulation AC, should enhance investor confidence in the securities markets, thereby leading to a more efficient market. The Commission has considered the proposed regulation in light of the standards cited in section 23(a)(2) and believes preliminarily that it, if adopted, would not impose any burden on competition not necessary or appropriate in furtherance of the purposes of the Exchange Act.

We request comment on whether the proposed amendments, if adopted, would impose a burden on competition not necessary or appropriate in furtherance of the purposes of the Exchange Act. We also request comment on whether the proposed amendments, if adopted, would promote efficiency, competition, and capital formation. Specifically, research analysts are employed by different kinds of entities. Therefore, we seek comment on whether the regulation should be more expansive. For example, should the proposed regulation cover banks that are not associated persons? Commenters are requested to provide empirical data and other factual support for their views if possible.

IX. Statutory Authority

Regulation AC is being proposed pursuant to sections 3, 15, 17, and 23 of the Exchange Act and pursuant to sections 17 and 19 of the Securities Act.

Text of the Proposed Regulation

List of Subjects in 17 CFR Part 242

Securities.

In accordance with the foregoing, Title 17, Chapter II, of the Code of Federal Regulations is proposed to be amended as follows:

PART 242—REGULATIONS M, ATS and AC

1. The authority citation for part 242 is revised to read as follows:

Authority: 15 U.S.C. 77g, 77q(a), 77s(a), 78b, 78c, 78g(c)(2), 78i(a), 78j, 78k–1(c), 78*l*, 78m, 78mm, 78n, 78o(b), 78o(c), 78o(g), 78q(a), 78q(b), 78q(h), 78w(a), 78dd–1, 80a–23, 80a–29, and 80a–37.

2. The part heading for part 242 is revised as set forth above.

3. Part 242 is amended by adding Regulation AC, §§ 242.500 through 242.502 to read as follows:

Regulation AC—Analyst Certification

Sec.
242.500 Definitions.
242.501 Research reports.
242.502 Public appearances.

Regulation AC—Analyst Certification

§ 242.500 Definitions.

For purposes of Regulation AC (§§242.500 through 242.502):

[24] These subparagraphs of the rule may be redesignated as Rule 17a–3(a)(12)(ii) and Rule 17a–3(a)(12)(iii), should the Commission adopt amendments proposed in October 2001. *See* Securities Exchange Act Release No. 44992 (October 26, 2001).

[25] Public Law 104–121, Title II, 110 Stat. 857 (1996) (codified in various sections of 5 U.S.C., 15 U.S.C., and as a note to 5 U.S.C. Section 601).

[26] 15 U.S.C. Section 78c(f).

[27] 15 U.S.C. Section 78w(a)(2).

Public appearance means any participation in a seminar, forum (including an interactive electronic forum), radio or television interview, or other public speaking activity in which a research analyst makes a specific recommendation or offers an opinion concerning a security or an issuer.

Research analyst means any natural person who is principally responsible for the analysis of any security or issuer included in a research report.

Research report means a written communication that includes an analysis of the securities of an issuer or issuers, provides information reasonably sufficient upon which to base an investment decision and includes a recommendation.

§ 242.501 Research reports.

A broker or dealer, or any person associated with a broker or dealer, that publishes, circulates, or provides, directly or indirectly, a research report prepared by a research analyst shall include in that research report a clear and prominent certification by the research analyst containing the following statements:

(a) A statement attesting that the views expressed in the research report accurately reflect the research analyst's personal views about any and all of the subject securities or issuers; and

(b)(1) A statement attesting that no part of the research analyst's compensation was, is, or will be, directly or indirectly, related to the specific recommendations or views expressed by the research analyst in the research report; or

(2) A statement:

(i) Attesting that part or all of the research analyst's compensation was, is, or will be, directly or indirectly, related to the specific recommendations or views expressed by the research analyst in the research report;

(ii) Identifying the source and amount of such compensation and the purpose therefor; and

(iii) Further disclosing that the compensation could influence the recommendations or views expressed in the research report.

§ 242.502 Public appearances.

(a) If a broker or dealer, or any person associated with a broker or dealer, publishes, circulates, or provides, directly or indirectly, a research report prepared by a research analyst, the broker or dealer must make a record within thirty days after each calendar quarter in which the research analyst has made a public appearance that includes a certification by the research analyst containing the following statements:

(1) A statement:

(i) Attesting that the views expressed by the research analyst in each public appearance accurately reflected the research analyst's personal views at that time about any and all of the subject securities or issuers; and

(ii) Attesting that no part of the research analyst's compensation was, is, or will be, directly or indirectly, related to the specific recommendations or views expressed by the research analyst in any public appearance; or

(2) A statement attesting that the research analyst is unable to provide the written certifications specified in paragraph (a)(1) of this section and the reasons therefor. The broker or dealer must also disclose in all research reports prepared by the research analyst for the next 120 days that the research analyst did not provide the certifications specified in paragraph (a)(1) of this section and the reasons therefor.

(b) A broker or dealer shall promptly provide copies of all statements prepared pursuant to paragraph (a)(2) of this section to its examining authority, designated pursuant to Section 17(d) of the Securities Exchange Act of 1934 (15 USC 78q(d)) and § 240.17d–2 of this chapter.

(c) A broker or dealer shall preserve the records specified in paragraph (a) of this section in accordance with § 240.17a–4(b)(4) of this chapter.

By the Commission.

Dated: August 2, 2002.

Margaret H. McFarland,

Deputy Secretary.

[FR Doc. 02–20031 Filed 8–7–02; 8:45 am]

BILLING CODE 8010–01–P

DEPARTMENT OF ENERGY

Federal Energy Regulatory Commission

18 CFR Part 2

[Docket No. PL02–7–000]

Standard of Review for Proposed Changes to Market-Based Rate Contracts for Wholesale Sales of Electric Energy by Public Utilities

August 1, 2002.

AGENCY: Federal Energy Regulatory Commission, DOE.

ACTION: Notice of proposed policy statement.

SUMMARY: The Federal Energy Regulatory Commission (Commission) is proposing to adopt a policy statement to announce a general policy regarding the standard of review that must be met to justify proposed changes to market-based rate contracts for wholesale sales of electric energy by public utilities. The intent of the proposed policy statement is to promote the sanctity of contracts, recognize the importance of providing certainty and stability in competitive electric energy markets, and provide adequate protection of electric energy customers. The Commission is inviting comments on the proposed policy statement.

DATES: Comments on the proposed policy statement are due September 23, 2002.

ADDRESSES: File written comments with the Office of Secretary, Federal Energy Regulatory Commission, 888 First Street, NE., Washington, DC 20426.

FOR FURTHER INFORMATION CONTACT:

Shaheda Sultan,Office of the General Counsel, Federal Energy Regulatory Commission, 888 First Street, NE., Washington, DC 20426, Telephone: (202) 219–2685.

Jonathan First, Office of the General Counsel, Federal Energy Regulatory Commission, 888 First Street, NE., Washington, DC 20426, Telephone: (202) 208–2142.

Before Commissioners: Pat Wood III, Chairman; William L. Massey, Linda Breathitt, and Nora Mead Brownell.

Proposed Policy Statement

I. Introduction

1. The Federal Energy Regulatory Commission is proposing to adopt a policy statement to announce a general policy regarding the standard of review that must be met to justify proposed changes to market-based rate contracts for wholesale sales of electric energy by public utilities. The specific prices, terms and conditions of service agreed to by willing sellers and buyers in such contracts are not required to be filed with the Commission when these contracts are entered into pursuant to generic market-based rate tariffs already approved by, and on file with, the Commission.[1] Because the generic tariffs are authorized only after the Commission has made findings that the sellers under such tariffs lack or have mitigated market power, the prices, terms and conditions of contracts pursuant to market-based tariffs are presumed to fall within a zone of

[1] *See* Order No. 2001, Revised Public Utility Filing Requirements, III FERC Stats. & Regs., Regulations Preambles ¶ 31,127 at 30,135–140 (April 25, 2002), *reh'g pending* (although contracts are not filed, detailed information about each transaction is reported to the Commission).

reasonableness.[2] In an electric utility industry increasingly dominated by such market-based rate contracts, and in light of recent uncertainties in the industry brought about by the market dysfunctions in California and the collapse of Enron Corp., the Commission believes it is critical to promote the stability of power supply contracts to meet future energy needs. One step toward this end is to clarify the standards under which such contracts may be modified. Accordingly, the purpose of this proposed policy statement is to recognize the sanctity of contracts and allow the parties to a market-based power sales contract to have greater certainty against contractual changes, by clarifying our application of the ''*Mobile-Sierra*'' doctrine.[3]

2. Recently, the Commission received complaints against numerous sellers, alleging that certain market-based rate contracts for electric energy contain excessive rates and should be reformed.[4] One of the contested issues in these cases was what standard of review to apply in determining whether changes are permitted to the contract, *i.e.,* whether to apply the ''just and reasonable'' standard of review or the ''public interest'' standard of review in determining whether to permit one of the parties to seek changes to the contract over the objections of the other party. In earlier cases, another contested issue was whether the Commission is bound by the same standard of review that the parties agreed to in the contract, when the Commission acts on the complaint of a third party or on its own motion under Section 206 of the Federal Power Act (FPA).[5]

3. The Commission believes that the proposed policy statement would serve to limit, as much as possible, such disputes in the future. The Commission is proposing precise language that parties would be required to include in their electric power sales contracts if they intend that the Commission apply the ''public interest'' standard of review to their contract. If the parties include in their contract the proposed language laid out below, they would be able to bind themselves and, if they choose, they would also be able to bind the Commission (acting *sua sponte* or on behalf of a third party) to a public interest standard of review. Under the proposed policy, if parties to a market-based power sales contract do not include this exact language in their contract, however, we would construe the omission as demonstrating the intent of the parties to allow a just and reasonable standard of review. In other words, the omission of, or any deviation from, the language quoted below would result in the use of a just and reasonable standard of review.

4. We note that the Commission is proposing to depart from past precedent by agreeing to be bound to a public interest standard of review for market-based power sales contracts where both parties to the contract agree to bind themselves, and also seek to bind the Commission, to this standard.[6] We propose this in order to promote the contract certainty necessary to support competitive wholesale power markets. Further, we emphasize that, even under a public interest standard of review for these types of contracts, we believe we would have adequate authority to protect non-parties to the contract.

II. Background

5. The FPA requires that rates must be just and reasonable and not unduly discriminatory or preferential.[7] The selling public utility can propose the rates and the Commission can approve them if it finds they meet the just and reasonable standard.[8] The Commission can also on its own motion or on the complaint of a third party investigate existing rates, and alter them prospectively, if it finds that such rates are no longer just and reasonable.[9] The FPA also provides that contracts between individual parties can be used to set rates.[10] In such contracts, selling utilities may agree to voluntarily restrict some or all of their freedom to change the contract rates, customers may agree to restrict their right to request the Commission to change the rate, and sometimes the parties to the contract may attempt to restrict not only themselves but also the Commission from changing the contract rate under the ''just and reasonable'' standard. Some courts have held that where the utility and the customer have contracted for a particular rate and not reserved their rights to propose contractual changes, the contract has been filed with the Commission, and the Commission has permitted the rate to become effective, the utility cannot over the objections of the customer file a new rate (under Section 205 of the FPA), and the customer and the Commission cannot (under Section 206 of the FPA) propose changing the existing contract rate under the ''just and reasonable'' standard of review.[11] Certain courts have instead required the Commission to use the ''public interest'' standard to effect a change to the contract rate. Although not clearly defined,[12] the ''public interest'' standard of review has been held to be higher or stricter than the ''just and reasonable'' standard of review.[13]

III. Discussion

6. A great deal of time and expense is incurred and much uncertainty is engendered when the parties involved in contract disputes and the Commission attempt to resolve the issues of whether the parties intended to invoke a public interest standard of review, and whether this standard binds only one party, both parties, third parties, and/or the Commission. In some cases there is the issue of whether the parties intended to include other language in the contract that invokes the just and reasonable standard of review for particular portions of the contract rate.[14] More time and resources are

[2] *See, e.g.,* State of California v. British Columbia Power Exchange Corporation, *et al.*, 99 FERC ¶ 61,247 (2002), *reh'g pending* (prior review consists of ''analysis to assure that the seller lacks or has mitigated market power so that its prices will fall within a zone of reasonableness'').

[3] United Gas Pipe Line Co. v. Mobile Gas Serv. Corp., 350 U.S. 332 (1956); FPC v. Sierra Power Co., 350 U.S. 348 (1956) (*Mobile-Sierra*). Under the *Mobile-Sierra* doctrine, private contracts that set firm rates or establish a methodology for setting the rates for service, and deny either party the right to unilaterally change those rates, can be modified or abrogated by the Commission only if required by the public interest. Texaco Inc. v. FERC, 148 F.3d 1091, 1095 (D.C. Cir. 1998) (*Texaco*).

[4] *See, e.g.,* Pub. Utilities Comm'n of the State of California, *et al.,* v. Sellers of Long-Term Contracts to the California Dep't of Water Resources, *et al.,* 99 FERC ¶61,087 (2002), *reh'g pending;* Nevada Power Co. and Sierra Pacific Power Co. v. Duke Energy Trading and Mktg. L.P., *et al.,* 99 FERC ¶61,047 (2002), *reh'g pending.*

[5] 16 U.S.C. 824e.

[6] Northeast Utilities Service Co. v. FERC, 55 F.3d 686, 692 (1st Cir. 1995) (*Northeast Utilities*).

[7] 16 U.S.C. 824d.

[8] 16 U.S.C. 824d.

[9] 16 U.S.C. 824e.

[10] *See, e.g.,* 16 U.S.C. 824d(d) and 824e(a).

[11] *See* Boston Edison Co. v. FERC, 233 F.3d 60 (1st Cir. 2000) (*Boston Edison*), *citing Mobile-Sierra.*

[12] *Northeast Utilities,* 55 F.3d at 690, describing the *Mobile-Sierra* standard of review: ''[N]owhere in the Supreme Court opinion is the term 'public interest' defined. Indeed, the Court seems to assume that the Commission decides what circumstances give rise to the public interest.''

[13] Papago Tribal Utility Authority v. FERC, 723 F.2d 950, 954 (D.C. Cir. 1983).

[14] *See, e.g., Texaco;* Union Pacific Fuels, Inc. v. FERC, 129 F.3d 157 (D.C. Cir. 1997) (*Union Pacific*); *Northeast Utilities.* Section 35.1(d) of the Commission's regulations sought to reduce this uncertainty somewhat in the electric area, by specifying contractual language to be used by parties in certain circumstances, 18 CFR 35.1(d) (2002). However, this regulation applies only to contracts for the transmission or sale of firm power for resale to an all-requirements customer, and addresses the standard of review only when a *seller* proposes contractual changes. If a contract for services covered by this regulation contains the language specified in section 35.1(d)(3), we will continue to construe this language as requiring a

Continued

expended and the uncertainty is prolonged when these cases are appealed to the courts, but as acknowledged by at least one court: ''[t]he truth is that the cases, even within the D.C. Circuit itself, do not form a completely consistent pattern. Compare, *e.g., Texaco,* 148 F.3d at 1096 with *Union Pac. Fuels, Inc. v. FERC,* 327 U.S. App. D.C. 74, 129 F.3d 157, 161–162 (D.C. Circuit 1997).'' [15] The *Boston Edison* court also stated that these issues would remain in a state of confusion until the Commission ''squarely confronted the underlying issues,'' and if the Commission ''wanted to eliminate much of the existing uncertainly regarding the parties'' intent, it might prescribe prospectively the terms that parties would have to use to invoke Mobile-Sierra protection.'' [16]

7. The Commission is of the opinion that under the circumstances existing in today's electric power industry, it is necessary to eliminate as much uncertainty as possible and to prospectively prescribe the terms that parties must use to invoke a public interest standard of review to changes in their market-based power sales contracts. Accordingly, the Commission is hereby proposing to adopt a general policy to require parties to market-based power sales contracts to include specific language in their contract if they intend to invoke the public interest standard of review. (The proposed language is set forth at the end of this document.) Under the proposal, the Commission would apply the ''public interest'' standard of review only if this specific language is included in the contract. The parties could choose specific language that binds only the parties to the public interest standard or language that also binds the Commission when it acts on behalf of a non-party or on its own motion. Under the proposed policy, it is contemplated that if neither version of the specific language is included in the contract, the Commission would apply the ''just and reasonable'' standard of review to the contract regardless of whether it was to act on behalf of a party, a non-party, or on its own motion.

IV. Comment Procedure

8. The Commission invites interested persons to submit comments on this Notice of Proposed Policy Statement.

9. Comments may be filed on paper or electronically via the Internet and must be received by the Commission on or before September 23, 2002. The Commission strongly encourages electronic filings. Those filing electronically do not need to make a paper filing. For paper filings, the original and 14 copies of such comments should be submitted to the Office of the Secretary, Federal Energy Regulatory Commission, 888 First Street, NE., Washington, DC 20426 and should refer to Docket No. PL–0–7–000.

10. Comments filed via the Internet must be prepared in WordPerfect, MS Word, Portable Document Format, or ASCII format. To file the document, access the Commission's website at *http://www.ferc.gov* and click on ''e-Filing,'' and then follow the instructions on each screen. First time users will have to establish a user name and password. The Commission will send an automatic acknowledgment to the sender's e-mail address upon receipt of comments.

11. User assistance for electronic filing is available at 202–208–0258 or by e-mail to *efiling@ferc.gov.* Comments should not be submitted to the e-mail address. All comments will be placed in the Commission's public files and will be available for inspection in the Commission's Public Reference Room at 888 First Street, NE., Washington DC 20426, during regular business hours. Additionally, all comments may be viewed, printed, or downloaded remotely via the Internet through FERC's Homespage using the RIMS link. User assistance for RIMS is available at 202–208–2222, or by e-mail to *RimsMaster@ferc.gov.*

V. Document Availability

12. In addition to publishing the full text of this document in the **Federal Register**, the Commission also provides all interested persons an opportunity to view and/or print the contents of this document via the Internet through FERC's Home Page (*http://www.ferc.gov/*) and in FERC's Public Reference Room during normal business hours (8:30 a.m. to 5:00 p.m. Eastern time) at 888 First Street, NE., Room 2A, Washington, DC 20426.

13. From FERC's Home Page on the Internet, this information is available in the Federal Energy Regulatory Records Information System (FERRIS). The full text of this document is available on FERRIS in PDF and WordPerfect format for viewing, printing, and/or downloading. To access this document in FERRIS, type the docket number excluding the last three digits of this document in the docket number field.

14. User assistance is available for FERRIS and the FERC website during normal business hours from our Help line at (202) 208–2222 or the Public Reference Room at (202) 208–1371 Press 0, TTY (202) 208–1695. E-mail the Public Reference Room at *public.referenceroom@ferc.gov.*

List of Subjects in 18 CFR Part 2

Administrative practice and procedure; Electric power; Natural gas; Pipelines; Reporting and record keeping requirements.

By direction of the Commission. Commissioners Massey, Brownell, and Breathitt concurred with separate statements attached.

Magalie R. Salas,

Secretary.

The Commission proposes to amend part 2, Chapter I, Title 18 of the Code of Federal Regulations as follows:

PART 2—GENERAL POLICY AND INTERPRETATIONS

1. The authority citation for part 2 continues to read as follows:

Authority: 5 U.S.C. 601; 15 U.S.C. 717–717w, 3301–3432; 16 U.S.C. 792–825y, 2601–2645; 42 U.S.C. 4321–4361, 7101–7352.

2. In part 2, § 2.27 is added to read as follows:

§ 2.27 Commission policy on standard of review for proposed changes to market-based power sales contracts.

(a) The Commission, by this policy statement, seeks to clarify the standard of review that will apply when reviewing proposed changes to market-based power sales contracts executed after [date that is 30 days after publication of the Final Rule in the **Federal Register**].

(b)(1) Market-based power sales contracts must contain the following provision when it is the intent of the contracting parties to bind only themselves to a ''public interest'' standard of review for that contract:

Absent the agreement of all parties to the proposed change, the standard of review for changes to [sections __ of] this contract proposed by a party to the contract shall be the ''public interest'' standard of review set forth in *United Gas Pipe Line Co.* v. *Mobile Gas Service Corp.,* 350 U.S. 332 (1956) and *Federal Power Commission* v. *Sierra Pacific Power Co.,* 350 U.S. 348 (1956) (the *''Mobile-Sierra''* doctrine).

(2) Market-based power sales contracts must contain the following provision when it is the intent of the contracting parties to bind themselves and the Commission (acting on behalf of a non-party or on its own motion) to a ''public interest'' standard of review for that contract:

Absent the agreement of all parties to the proposed change, the standard of review for

public interest standard of review only when a *seller* proposes contractual changes.

[15] *Boston Edison,* 233 F.3d at 67.

[16] *Id.* at 68.

changes to [sections __ of] this contract proposed by a party, a non-party or the Federal Energy Regulatory Commission acting *sua sponte* shall be the ''public interest'' standard of review set forth in *United Gas Pipe Line Co.* v. *Mobile Gas Service Corp.,* 350 U.S. 332 (1956) and *Federal Power Commission* v. *Sierra Pacific Power Co.,* 350 U.S. 348 (1956) (the *''Mobile-Sierra''* doctrine).

(c) Any market-based power sales contract that does not contain either of the provisions in paragraph (b) of this section will be construed by the Commission as allowing a ''just and reasonable'' standard of review for any proposed changes to the contract.

Note: The following concurring commissioners' statements will not appear in the Code of Federal Regulations.

MASSEY, Commissioner, *concurring:*

I support this order's objective of clarifying standards under which contracts may be modified and allowing parties to market-based power sales contracts greater certainty in the application of the *Mobile-Sierra* doctrine. Nevertheless, I write separately because I believe the Proposed Policy Statement would have been stronger if it had recognized explicitly the potential use of market power to extract an agreement to a *Mobile-Sierra* clause in a contract. As recognized by the DC Circuit Court of Appeals in *Atlantic City Electric Company:*[1]

> As we have held, the purpose of the *Mobile-Sierra* doctrine is to preserve the benefits of the parties' bargain as reflected in the contract, assuming there was no reason to question what transpired at the contract formation stage. (Citing *Town of Norwood* v. *FERC*[2])

The *Mobile-Sierra* doctrine assumes that contracts are entered into voluntarily. Thus, a seller may not dictate, through the exercise of market power, the standard of review specified in a contract. I believe the Proposed Policy Statement should have explicitly addressed this concern. If a party to a contract would not have agreed to the insertion of the *Mobile-Sierra* clause absent the exercise of market power, then the Commission should allow that party to advocate the use of the just and reasonable standard.

With these thoughts in mind, I concur with today's order.

William L. Massey,

Commissioner.

BROWNELL, Commissioner, and BREATHITT, Commissioner, concurring:

1. We are voting in favor of this proposal for two reasons. First, we support providing the market with greater certainty concerning the Commission's review of market-based rate contracts. Second, we support changing the Commission's existing policy of not applying the *Mobile-Sierra* public interest standard when modifying market-based rate contracts on its own motion. However, we wonder if the proposal has gotten things backward on when the public interest standard is triggered.

2. Under the proposed policy, the Commission will not apply the *Mobile-Sierra* public interest standard when reviewing proposed changes to a market-based rate contract (regardless of whether the changes are sought by the seller, the buyer, a third party, or the Commission itself) unless explicit language dictating that standard is included in the contract. We would have preferred to propose a policy of applying the public interest standard unless there is explicit language in the contract that invites the Commission to apply a lower standard.

3. Competitive markets rely on investors to provide the capital needed to build generation. Investors will not participate in a market in which disgruntled buyers are allowed to break their contracts, at least not without charging a significant risk premium—a cost that will ultimately be borne by consumers. Therefore, as a policy matter, we think it might be preferable to hold everyone to the same high standard when seeking changes to market-based rate contracts, absent contract language indicating that the parties to the contract have agreed to a lower standard.

4. Moreover, we see nothing in the *Mobile-Sierra* case law that bars the Commission from adopting such a policy. Faced with balancing the sanctity of contracts against the Commission's statutory duty to review the justness and reasonableness of rates, the Supreme Court in *Mobile, Sierra,* and subsequent cases has ruled that, absent contractual language to the contrary, the Commission may not approve a seller's unilateral contract modification under § 205 of the Federal Power Act unless the modification is necessary for the public interest.[1] The case law on when the public interest standard applies in a § 206 proceeding, be it brought by the buyer, a third party, or by the Commission acting *sua sponte,* is much less clear. However, at least two courts have applied the public interest standard in § 206 proceedings notwithstanding the absence of contractual language specifying that standard.[2]

5. Therefore, we urge interested parties to comment on whether, as both a legal and a policy matter, the ''default'' in the policy statement should be reversed.

Nora Mead Brownell.

Linda Key Breathitt.

[FR Doc. 02–19915 Filed 8–7–02; 8:45 am]

BILLING CODE 6717–01–P

[1] Atlantic City Electric Company v. FERC, Docket No. 97–1097 (issued July 12, 2002), mimeo at 20.

[2] 587 F.2d 1306, 1312 (D.C. Cir. 1978).

[1] *See* United Gas Pipe Line Co. v. Mobile Gas Serv. Corp., 350 U.S. 332 (1956); FPC v. Sierra Pacific Power, 350 U.S. 348 (1956); and United Gas Pipeline Co. v. Memphis Light, Gas and Water Div., 358 U.S. 103 (1958).

[2] *See* Texaco Inc. v. FERC, 148 F.3d 1091, 1096 (D.C. Cir. 1998) (stating that prior decisions ''did not suggest that the parties' failure to explicitly foreclose the Commission's authority to replace rates [under § 206] would leave it intact. The law is quite clear: absent contractual language susceptible to the construction that the rate may be altered while the contract subsists, the *Mobile-Sierra* doctrine applies.''); Boston Edison Co. v. FERC, 233 F.3d 60, 67 (1st Cir. 2000) (''[T]he specification of a rate or formula by itself implicates *Mobile-Sierra* (unless the parties negate the implication).'').

DEPARTMENT OF THE TREASURY

Customs Service

19 CFR parts 4 and 113

RIN 1515–AD11

Presentation of Vessel Cargo Declaration to Customs Before Cargo is Laden Aboard Vessel at Foreign Port for Transport to the United States

AGENCY: U.S. Customs Service, Department of the Treasury.

ACTION: Proposed rule.

SUMMARY: This document proposes to amend the Customs Regulations to require the advance and accurate presentation of manifest information prior to lading at the foreign port and to encourage the electronic presentation of such information in advance. The document also proposes to allow a non-vessel operating common carrier (NVOCC) having an International Carrier Bond to electronically present this cargo manifest information to Customs. This information is required in advance and is urgently needed in order to enable Customs to evaluate the risk of smuggling before goods are loaded on vessels for importation into the United States, including the risk of smuggling of weapons of mass destruction through the use of oceangoing cargo containers, while, at the same time, enabling Customs to facilitate the prompt release of

legitimate cargo following its arrival in the United States. Failure to provide the required information in the time period prescribed may result in the assessment of civil monetary penalties or claims for liquidated damages.

DATES: Comments must be received on or before September 9, 2002.

ADDRESSES: Written comments are to be addressed to the U.S. Customs Service, Office of Regulations & Rulings, Attention: Regulations Branch, 1300 Pennsylvania Avenue NW., Washington, DC 20229. Submitted comments may be inspected at U.S. Customs Service, 799 9th Street, NW., Washington, DC, during regular business hours. Arrangements to inspect submitted comments should be made in advance by calling Mr. Joseph Clark at (202) 572–8768.

FOR FURTHER INFORMATION CONTACT: For legal matters: Larry L. Burton, Office of Regulations and Rulings, (202–572–8724).

For operational matters: Kimberly Nott, Office of Field Operations, (202–927–0042).

SUPPLEMENTARY INFORMATION:

Background

The Customs laws impose certain requirements upon vessels that will arrive in the United States to discharge their cargo. In particular, vessels destined for the United States must comply with 19 U.S.C. 1431, which requires that every vessel bound for the United States and required to make entry under 19 U.S.C. 1434 have a manifest that meets the requirements that are prescribed by regulation. To this end, under 19 U.S.C. 1431(d), Customs may by regulation specify the form for, and the information and data that must be contained in, the vessel manifest, as well as the manner of production for, and the delivery or electronic transmittal of, the vessel manifest.

Currently, § 4.7, Customs Regulations (19 CFR 4.7), requires: that the master of every vessel arriving in the United States and required to make entry have on board the vessel a manifest in accordance with 19 U.S.C. 1431 and § 4.7; and that an original and one copy of the manifest must be ready for production upon demand and must be delivered to the first Customs officer who demands the manifest. Sections 4.7(a) and 4.7a, Customs Regulations (19 CFR 4.7a), set forth the documentary and informational requirements that constitute the vessel manifest.

Pursuant to § 4.7(a), the cargo declaration (Customs Form 1302 or its electronic equivalent) is one of the documents that comprises a vessel manifest. The cargo declaration, or cargo manifest, must list all the inward foreign cargo on board the vessel regardless of the intended U.S. port of discharge of the cargo (§ 4.7a(c)(1)).

Furthermore, 19 U.S.C. 1448 provides, in pertinent part, that no merchandise may be unladen from a vessel which is required to make entry under section 1434 until Customs has issued a permit for the unlading. In addition, under section 1448, Customs possesses a reasonable measure of regulatory discretion as to whether, and under what circumstances and conditions, to issue a permit to unlade incoming cargo from a vessel arriving in the United States. Section 4.30, Customs Regulations (19 CFR 4.30), lists the requirements and conditions under which Customs may issue a permit to unlade foreign merchandise from a vessel arriving in the United States.

Finally, 19 U.S.C. 1436(a)(1) and (a)(4) provide that it is unlawful to fail to comply with sections 1431, 1433 or 1434 or any regulation prescribed under any of those statutory authorities. Further, 19 U.S.C. 1436(a)(2) states that it is unlawful to present or transmit, electronically or otherwise, any forged, altered or false document, paper, data or manifest to the Customs Service under 19 U.S.C. 1431, 1433(d) or 1434. Under section 1436(b), the master of a vessel who commits any such violation is liable for a civil penalty of $5,000 for the first violation and $10,000 for each subsequent violation and any conveyance used in connection with any such violation is subject to seizure and forfeiture.

Proposed Rulemaking; Advance Presentation of Vessel Cargo Manifest to Customs; Required Information

Customs proposes in this document to amend § 4.7 to provide that, pursuant to 19 U.S.C. 1431(d), for any vessel subject to entry under 19 U.S.C. 1434 upon its arrival in the United States, Customs must receive the vessel's cargo manifest (declaration) from the carrier 24 hours before the related cargo is laden aboard the vessel at the foreign port.

Necessity for Advance Presentation of Vessel Cargo Manifest to Customs

The United States Customs Service recently launched the Container Security Initiative (''CSI''), a program that will protect the United States and a significant part of the global trading system—containerized shipping—from terrorists and the implements of terrorism, including weapons of mass destruction. With CSI, the United States is entering into partnerships with other governments to target and inspect high-risk sea containers in foreign ports, before they are shipped to the United States. This will not only deter terrorists from attempting to use the global shipping system for their destructive purposes, it will also substantially reduce the risk of weapons of mass destruction from ever reaching our shores.

CSI, which provides improved security without slowing the flow of legitimate trade, is an integral part of the President's homeland security strategy. The initiative also has the full support of the G–8 and the World Customs Organization.

The Customs Service successfully piloted a version of CSI in Canada and already has agreements with the governments of the Netherlands, Belgium, and France to implement CSI at the ports of Rotterdam, Antwerp, and Le Havre. U.S. Customs Service inspectors will be stationed at those ports shortly. Agreements with other governments are imminent, and the Customs Service anticipates continued, rapid growth of CSI over the next several weeks and months.

An essential element of CSI is advance transmission of vessel cargo manifest information to Customs. Analysis of the manifest information prior to lading will enable overseas Customs personnel to identify high-risk containers effectively and efficiently, while ensuring prompt processing of lower risk containers. Because of CSI's rapid growth and critical role in homeland security, it is necessary that Customs begin receiving the advance manifest information required for CSI implementation as soon as possible.

Non-Vessel Operating Common Carriers (NVOCCs)

In the event that a non-vessel operating common carrier (NVOCC) delivers cargo to a vessel carrier for lading aboard the vessel at the foreign port, the NVOCC, if licensed by the Federal Maritime Commission and in possession of an International Carrier Bond executed pursuant to part 113 of the Customs Regulations (19 CFR part 113), containing the provisions of § 113.64 (19 CFR 113.64), may electronically transmit the corresponding required cargo manifest information directly to Customs through the Automated Manifest System (AMS) 24 or more hours before the related cargo is laden aboard the vessel at the foreign port; in the alternative, the NVOCC would need to fully disclose and present the required manifest information for the related cargo to the vessel carrier which would be required to present this information to Customs. For purposes of this rulemaking, a non-

vessel operating common carrier (NVOCC) means a common carrier that does not operate the vessels by which the ocean transportation is provided, and is a shipper in its relationship with an ocean common carrier.

This document proposes to amend the conditions of the International Carrier Bond (19 CFR 113.64) to add a new provision which would recognize the status of an NVOCC as a manifesting party and would obligate any NVOCC having such a bond and electing to provide cargo manifest information to Customs electronically under § 4.7 and 4.7a to transmit such information to Customs in an accurate and timely manner. Breach of these obligations would result in liquidated damages against the NVOCC.

Cargo Declarations; Information Required

Additionally, Customs proposes in this rulemaking to amend § 4.7a to require that the cargo declaration, on Customs Form 1302 or a Customs-approved electronic equivalent, separately list all foreign cargo not destined for the United States that remains on board the vessel (''FROB'') as well as any empty containers that are on the vessel. Moreover, in addition to the cargo declaration information required for cargo destined for the United States in § 4.7a(c)(1)–(c)(3), § 4.7a would be amended in this proposed rule to add a new paragraph (c)(4) to provide that the cargo declaration, either on Customs Form 1302, or on a separate sheet or Customs-approved electronic equivalent, must state:

(1) The foreign port of departure;

(2) The carrier (SCAC) code;

(3) The voyage number;

(4) The date of scheduled arrival in the first U.S. port in Customs territory;

(5) The numbers and quantities from the carrier's ocean bills of lading, either master or house, as applicable;

(6) The first port of receipt of the cargo by the inward foreign ocean carrier;

(7) A precise description (or the Harmonized Tariff Schedule (HTS)) numbers under which the cargo is classified if that information is received from the shipper) and weight of the cargo or, for a sealed container, the shipper's declared description and weight of the cargo. Generic descriptions, specifically such as ''FAK'' (''freight of all kinds''), ''general cargo'', and ''STC'' (''said to contain'') are not acceptable;

(8) The shipper's name and address, or an identification number, from all bills of lading;

(9) The consignee's name and address, or the owner's or owners' representative's name and address, or an identification number, from all bills of lading;

(10) Notice that actual boarded quantities are not equal to quantities as indicated on the relevant bills of lading (except that a carrier is not required to verify boarded quantities of cargo in sealed containers);

(11) The vessel name, national flag, and vessel number;

(12) The foreign port where the cargo is laden on board;

(13) Hazardous material indicator;

(14) Container number (for containerized shipments); and

(15) The seal number affixed to the container.

As explained above in the context of the CSI, these expanded information requirements are necessary to enable Customs to evaluate the risk of smuggling before goods are loaded onto vessels for importation into the United States, including the risk of smuggling of weapons of mass destruction. This information is required in advance for Customs to assess the risks presented by shipments for smuggling while providing expedited treatment of cargo upon arrival.

The failure by the master to present or transmit accurate manifest data in the time period prescribed by regulation and the presentation or transmission by the master of any false, forged or altered document, paper, manifest or data to Customs may result in the assessment of monetary penalties under the provisions of 19 U.S.C. 1436(b). If an NVOCC having an International Carrier Bond elects to transmit such data electronically to Customs and fails to do so in the time period prescribed by regulation or transmits any false, forged or altered document, paper, manifest or data to Customs, the NVOCC may be liable for the payment of liquidated damages for breach of the condition of the International Carrier Bond.

Issuance of Permit to Unlade Cargo

If the carrier does not present cargo declaration information to Customs prior to the lading of the cargo aboard the vessel at the foreign port, Customs may, in addition to assessment of civil monetary penalties, delay issuance of a permit to unlade the entire vessel until all required information is received. Customs may also decline to issue a permit to unlade the specific cargo for which a declaration is not received 24 hours before lading in a foreign port. Such a delay in the issuance of a permit to unlade or refusal of a permit to unlade would be appropriate because Customs cannot determine whether or when to permit the unlading of cargo until it has received timely, complete, and accurate declaration information and has reviewed the cargo manifest to gauge the potential risk associated with the importation of that cargo.

Preliminary Entry

It is also proposed that § 4.8 be amended to make it clear that the granting of preliminary entry by Customs will be conditioned upon the electronic submission of the Cargo Declaration (Customs Form (CF) 1302), as well as the provision to Customs either electronically or in paper form of all other forms required by § 4.7.

Comments

Before adopting this proposal, consideration will be given to any written comments that are timely submitted to Customs. Only a 30-day comment period is being provided for in this notice because of the urgent necessity for Customs to receive advance manifest information to strengthen the CSI and to prevent the risk of smuggling of weapons of mass destruction. Customs specifically requests comments on the clarity of this proposed rule and how it may be made easier to understand. Comments submitted will be available for public inspection in accordance with the Freedom of Information Act (5 U.S.C. 552), § 1.4 of the Treasury Department Regulations (31 CFR 1.4), and § 103.11(b), Customs Regulations (19 CFR 103.11(b)), at the U.S. Customs Service, 799 9th Street, NW., Washington, DC during regular business hours. Arrangements to inspect submitted comments should be made in advance by calling Mr. Joseph Clark at (202) 572–8768.

Regulatory Flexibility Act and Executive Order 12866

The advance presentation to Customs of vessel manifest information for cargo destined for the United States as prescribed under the proposed amendments is intended to expedite the release of incoming cargo while, at the same time, ensuring maritime safety and protecting national security. As such, pursuant to the provisions of the Regulatory Flexibility Act (5 U.S.C. 601 *et seq.*), it is certified that, if adopted, the proposed amendments would not have a significant economic impact on a substantial number of small entities. Accordingly, the proposed amendments are not subject to the regulatory analysis or other requirements of 5 U.S.C. 603 and 604. Nor do they meet the criteria

for a ''significant regulatory action'' as specified in E.O. 12866.

Paperwork Reduction Act

The collection of information in this document is contained in § 4.7a(c)(4). Under § 4.7a(c)(4), the information would be required and used to determine the security conditions under which cargo was maintained prior to and following its delivery for lading aboard a vessel for shipment to the United States. The likely respondents and/or recordkeepers are business or other for-profit institutions.

The collection of information encompassed within this proposed rule has been submitted to the Office of Management and Budget (OMB) for review in accordance with the Paperwork Reduction Act of 1995 (44 U.S.C. 3507). An agency may not conduct, and a person is not required to respond to, a collection of information unless the collection of information displays a valid control number assigned by OMB.

Estimated annual reporting and/or recordkeeping burden: 66,700 hours.

Estimated average annual burden per respondent/recordkeeper: 6.67 hours.

Estimated number of respondents and/or recordkeepers: 10,000.

Estimated annual frequency of responses: 100.

Comments on the collection of information should be sent to the Office of Management and Budget, Attention: Desk Officer of the Department of the Treasury, Office of Information and Regulatory Affairs, Washington, DC 20503. A copy should also be sent to the Regulations Branch, Office of Regulations and Rulings, U.S. Customs Service, 1300 Pennsylvania Avenue, NW., Washington, DC 20229. Comments should be submitted within the time frame that comments are due regarding the substance of the proposal.

Comments are invited on: (a) Whether the collection is necessary for the proper performance of the functions of the agency, including whether the information will have practical utility; (b) the accuracy of the agency's estimate of the burden of the collection of the information; (c) ways to enhance the quality, utility, and clarity of the information to be collected; (d) ways to minimize the burden of the collection of information on respondents, including through the use of automated collection techniques or other forms of information technology; and (e) estimates of capital or startup costs and costs of operations, maintenance, and purchase of services to provide information.

Part 178, Customs Regulations (19 CFR part 178), containing the list of approved information collections, would be revised to add an appropriate reference to 4.7a(c)(4), upon adoption of the proposal as a final rule.

List of Subjects

19 CFR Part 4

Administrative practice and procedure, Arrival, Cargo vessels, Customs duties and inspection, Declarations, Entry, Freight, Harbors, Hazardous substances, Imports, Inspection, Landing, Maritime carriers, Merchandise, Reporting and recordkeeping requirements, Shipping, Vessels.

19 CFR Part 113

Bonds, Customs duties and inspection, Exports, Foreign commerce and trade statistics, Freight, Imports, Reporting and recordkeeping requirements.

Proposed Amendments to the Regulations

It is proposed to amend parts 4 and 113, Customs Regulations (19 CFR parts 4 and 113), as set forth below:

PART 4—VESSELS IN FOREIGN AND DOMESTIC TRADES

1. The general authority citation for part 4 and the relevant specific authority citations would continue to read as follows:

Authority: 5 U.S.C. 301; 19 U.S.C. 66, 1431, 1433, 1434, 1624; 46 U.S.C. App. 3, 91;

* * * * *

Section 4.7 also issued under 19 U.S.C. 1581(a); 46 U.S.C. App. 883a, 883b;

Section 4.7a also issued under 19 U.S.C. 1498, 1584;

Section 4.8 also issued under 19 U.S.C. 1448, 1486;

* * * * *

Section 4.30 also issued under 19 U.S.C. 288, 1446, 1448, 1450–1454, 1490;

* * * * *

2. It is proposed to amend § 4.7 by revising its section heading; by redesignating the existing text of paragraph (b) as paragraph (b)(1) and revising the first sentence of newly redesignated paragraph (b)(1); and by adding new paragraphs (b)(2), (b)(3), and (e) to read as follows:

§ 4.7 Inward foreign manifest; production on demand; contents and form; advance filing of cargo declaration.

* * * * *

(b)(1) In addition to any Cargo Declaration that has been filed in advance as prescribed in paragraph (b)(2) of this section, the original and one copy of the manifest must be ready for production on demand. * * *

(2) For any vessel subject to paragraph (a) of this section, Customs must receive from the carrier the vessel's Cargo Declaration, Customs Form 1302, or a Customs-approved electronic equivalent, 24 hours before such cargo is laden aboard the vessel at the foreign port (see § 4.30(n)(1)). Participants in the Automated Manifest System (AMS) are required to provide the vessel's cargo declaration electronically.

(3)(i) Where a non-vessel operating common carrier (NVOCC), as defined in paragraph (b)(3)(ii) of this section, delivers cargo to the vessel carrier for lading aboard the vessel at the foreign port, the NVOCC, if licensed by the Federal Maritime Commission and in possession of an International Carrier Bond containing the provisions of § 113.64 of this chapter, may electronically transmit the corresponding required cargo manifest information directly to Customs through the Automated Manifest System (AMS) 24 or more hours before the related cargo is laden aboard the vessel at the foreign port (see § 113.64(c) of this chapter); in the alternative, the NVOCC must fully disclose and present the required manifest information for the related cargo to the vessel carrier which is required to present this information to Customs.

(ii) A non-vessel operating common carrier (NVOCC) means a common carrier that does not operate the vessels by which the ocean transportation is provided, and is a shipper in its relationship with an ocean common carrier. The term ''non-vessel operating common carrier'' does not include freight forwarders as defined in part 112 of this chapter.

* * * * *

(e) *Failure to provide manifest information; penalties/liquidated damages.* Any master who fails to provide manifest information as required by this section, or who presents or transmits electronically any document required by this section that is forged, altered or false, or who fails to present or transmit the information required by this section in a timely manner, may be liable for civil penalties as provided under 19 U.S.C. 1436, in addition to penalties applicable under other provisions of law. In addition, if any non-vessel operating common carrier (NVOCC) as defined in paragraph (b)(3)(ii) of this section elects to transmit cargo manifest information to Customs electronically and fails to do so in the manner and in the time period required by paragraph (b)(3)(i) of this section, or electronically transmits any false, forged or altered document, paper, manifest or

data to Customs, such NVOCC may be liable for the payment of liquidated damages as provided in § 113.64(c) of this chapter.

3. It is proposed to amend § 4.7a by revising the first sentence of paragraph (c)(1), by adding a new paragraph (c)(4), and by adding a new paragraph (f) to read as follows:

§ 4.7a Inward manifest; information required; alternative forms.

* * * * *

(c) *Cargo Declaration.* (1) The Cargo Declaration (Customs Form 1302 or a Customs-approved electronic equivalent) must list all the inward foreign cargo on board the vessel regardless of the U.S. port of discharge, and must separately list any other foreign cargo remaining on board (''FROB'') as well as any empty containers that are on the vessel. * * *

* * * * *

(4) In addition to the cargo manifest information required in paragraphs (c)(1)–(c)(3) of this section, for all inward foreign cargo, the Cargo Declaration, either on Customs Form 1302, or on a separate sheet or Customs-approved electronic equivalent, must state the following:

(i) The foreign port of departure;

(ii) The carrier (SCAC) code;

(iii) The voyage number;

(iv) The date of scheduled arrival in the first U.S. port in Customs territory;

(v) The numbers and quantities from the carrier's ocean bills of lading, either master or house, as applicable;

(vi) The first port of receipt of the cargo by the inward foreign ocean carrier;

(vii) A precise description (or the Harmonized Tariff Schedule (HTS)) numbers under which the cargo is classified if that information is received from the shipper) and weight of the cargo or, for a sealed container, the shipper's declared description and weight of the cargo. Generic descriptions, specifically such as ''FAK'' (''freight of all kinds''), ''general cargo'', and ''STC'' (''said to contain'') are not acceptable;

(viii) The shipper's name and address, or an identification number, from all bills of lading;

(ix) The consignee's name and address, or the owner's or owners' representative's name and address, or an identification number, from all bills of lading;

(x) Notice that actual boarded quantities are not equal to quantities as indicated on the relevant bills of lading (except that a carrier is not required to verify boarded quantities of cargo in sealed containers);

(xi) The vessel name, national flag, and vessel number;

(xii) The foreign port where the cargo is laden on board;

(xiii) Hazardous material indicator;

(xiv) Container number (for containerized shipments); and

(xv) The seal number affixed to the container.

* * * * *

(f) *Failure to provide manifest information; penalties/liquidated damages.* Any master who fails to provide manifest information as required by this section, or who presents or transmits electronically any document required by this section that is forged, altered or false, may be liable for civil penalties as provided under 19 U.S.C. 1436, in addition to penalties applicable under other provisions of law. In addition, if any non-vessel operating common carrier (NVOCC) as defined in § 4.7(b)(3)(ii) elects to transmit cargo manifest information to Customs electronically, and fails to do so as required by this section, or transmits electronically any document required by this section that is forged, altered or false, such NVOCC may be liable for liquidated damages as provided in § 113.64(c) of this chapter.

4. It is proposed to amend § 4.8 by revising the second and third sentences of paragraph (b) to read as follows:

§ 4.8 Preliminary entry.

* * * * *

(b) *Requirements and conditions.* * * * The granting of preliminary vessel entry by Customs at or subsequent to arrival of the vessel, is conditioned upon the presentation to and acceptance by Customs of all forms, electronically or otherwise, comprising a complete manifest as provided in § 4.7, except that the Cargo Declaration, Customs Form (CF) 1302, must be presented to Customs electronically in the manner provided in § 4.7(b)(2). Vessels seeking preliminary entry in advance of arrival must do so: by presenting to Customs the electronic equivalent of a complete Customs Form 1302 (Cargo Declaration), in the manner provided in § 4.7(b), showing all cargo on board the vessel; and by presenting Customs Form 3171 electronically no less than 48 hours prior to vessel arrival. * * *

* * * * *

5. It is proposed to amend § 4.30 by adding a new paragraph (n) to read as follows:

§ 4.30 Permits and special licenses for unlading and lading.

* * * * *

(n)(1) Customs will not issue a permit to unlade until it has received the cargo declaration information pursuant to § 4.7(b). In cases in which Customs does not receive complete cargo manifest information from the carrier or from the NVOCC, in the manner and format required by § 4.7(b), 24 hours prior to the lading of the cargo aboard the vessel at the foreign port, Customs may delay issuance of a permit to unlade the entire vessel until all required information is received. Customs may also decline to issue a permit to unlade the specific cargo for which a declaration is not received 24 hours before lading in a foreign port. Furthermore, where the carrier does not present an advance cargo manifest to Customs electronically, in the manner provided in § 4.7(b)(2), preliminary entry pursuant to § 4.8(b) will be denied.

(2) In addition, while the advance presentation of the cargo manifest for any vessel subject to § 4.7(b)(2) may be made in paper form or by electronic transmission through a Customs-approved electronic data interchange system, the submission of an electronic manifest for the cargo in this regard, as opposed to a paper manifest, will further facilitate the prompt issuance of a permit to unlade the cargo.

PART 113—B CUSTOMS BONDS

1. The general authority citation for part 113 would continue to read as follows:

Authority: 19 U.S.C. 66, 1623, 1624.

2. It is proposed to amend § 113.64 by revising the first sentence of paragraph (a); and by redesignating paragraphs (c), (d), (e) and (f) as paragraphs (d), (e), (f) and (g), respectively, and adding a new paragraph (c) to read as follows:

§ 113.64 International carrier bond conditions.

(a) *Agreement to Pay Penalties, Duties, Taxes, and Other Charges.* If any vessel, vehicle, or aircraft, or any master, owner, or person in charge of a vessel, vehicle or aircraft, or any non-vessel operating common carrier as defined in § 4.7(b)(3)(ii) of this chapter incurs a penalty, duty, tax or other charge provided by law or regulation, the obligors (principal and surety, jointly and severally) agree to pay the sum upon demand by Customs. * * *

* * * * *

(c) *Non-vessel operating common carrier (NVOCC).* If a non-vessel operating common carrier (NVOCC) as defined in § 4.7(b)(3)(ii) of this chapter elects to provide vessel cargo manifest information to Customs electronically, the NVOCC, as a principal under this

bond, in addition to compliance with the other provisions of this bond, also agrees to provide such manifest information to Customs in the manner and in the time period required by §§ 4.7(b) and 4.7a(c) of this chapter. If the NVOCC, as principal, defaults with regard to these obligations, the principal and surety (jointly and severally) agree to pay liquidated damages of $5,000 for each regulation violated.

* * * * *

Robert C. Bonner,

Commissioner of Customs.

Approved: August 6, 2002.

Timothy E. Skud,

Deputy Assistant Secretary of the Treasury.

[FR Doc. 02–20147 Filed 8–6–02; 11:42 am]

BILLING CODE 4820–02–P

DEPARTMENT OF LABOR

Occupational Safety and Health Administration

29 CFR Part 1910

[Docket No. H–044]

RIN 1218–AA84

Occupational Exposure to 2-Methoxyethanol, 2-Ethoxyethanol and Their Acetates (Glycol Ethers)

AGENCY: Occupational Safety and Health Administration, Labor.

ACTION: Reopening of the rulemaking record on a proposed rule.

SUMMARY: The Occupational Safety and Health Administration (OSHA) is re-opening the record in the rulemaking on Occupational Exposure to 2-Methoxyethanol, 2-Ethoxyethanol, and their Acetates (Glycol Ethers) to solicit information on the extent to which the four glycol ethers (2–ME, 2–EE, 2–MEA and 2–EEA) are currently used in the workplace. The Agency is also seeking information on substitutes for these four glycol ethers that employers may be using, including information on patterns of use, levels of employee exposure to the substitutes, and their degree of toxicity.

DATES: Comments must be submitted by the following dates:

Hard Copy: Your comments must be submitted (postmarked or sent) by November 6, 2002.

Facsimile and Electronic Transmission: Your comments must be sent by November 6, 2002. (Please see the Supplementary Information provided below for additional information on submitting comments.)

ADDRESSES: *Regular Mail, Express Delivery, Hand-delivery, and Messenger Service:* You must submit three copies of your comments and attachments to the OSHA Docket Office, Docket No. H–044, Room N–2625, U.S. Department of Labor, 200 Constitution Avenue, NW., Washington, DC 20210; telephone (202) 693–2350. OSHA Docket Office and Department of Labor hours of operation are 8:15 a.m. to 4:45 p.m., EST.

Facsimile: If your comments, including any attachments, are 10 pages or fewer, you may fax them to the OSHA Docket Office at (202) 693–1648. You must include the docket number of this document, Docket No. H–044, in your comments.

Electronic: You may submit comments through the Internet at *http://ecomments.osha.gov.*

FOR FURTHER INFORMATION CONTACT: For general information and press inquiries, contact the Office of Public Affairs, N–3647, 200 Constitution Avenue, NW., Washington, DC 20210. Telephone: (202) 693–1890. For technical inquiries, contact Ms. Amanda Edens, Directorate of Health Standards Programs, OSHA, N–3718, 200 Constitution Avenue, NW., Washington, DC 20210. Telephone 202–693–2270. For additional copies of this **Federal Register** document, contact OSHA, Office of Publications, U.S. Department of Labor, Room N–3101, 200 Constitution Avenue, NW., Washington, DC 20210; telephone (202) 693–1888. Electronic copies of this **Federal Register** document, as well as news releases and other relevant documents, are available at OSHA's web page on the Internet at *www.osha.gov.*

SUPPLEMENTARY INFORMATION:

Submission of Comments on This Document and Internet Access to Comments and Submissions

You may submit comments in response to this document by (1) hard copy, or (2) FAX transmission (facsimile), or (3) electronically through the OSHA Webpage. Please note that you cannot attach materials, such as studies or journal articles, to electronic comments. If you have additional materials, you must submit three copies of them to the OSHA Docket Office at the address above. The additional materials must clearly identify your electronic comments by name, date, subject and docket number so we can attach them to your comments. Because of security-related problems there may be a significant delay in the receipt of comments by regular mail. Please contact the OSHA Docket Office at (202) 693–2350 for information about security procedures concerning the delivery of materials by express delivery, hand delivery and messenger service.

All comments and submissions will be available for inspection and copying at the OSHA Docket Office at the above address. Comment and submissions posted on OSHA's Web site are available at *www.osha.gov.* OSHA cautions you about submitting personal information such as social security numbers and birth dates. Contact the OSHA Docket Office at (202) 693–2350 for information about materials not available through the OSHA Web page and for assistance in using the Web page to locate docket submissions.

Background

On March 23, 1993, OSHA proposed to reduce permissible exposure limits for four ethylene glycol ethers (2-Methoxyethanol (2–ME), 2-Ethoxyethanol (2–EE), and their acetates (2–MEA, 2–EEA)) to protect approximately 46,000 workers from significant risks of adverse reproductive and developmental health effects (58 FR 15526). The Agency held informal public hearings on the proposal, and the record was certified in March 1994.

Information submitted in response to the proposal, at the hearings, and in post-hearing comments indicates that the domestic production of the four ethylene glycol ethers was on the decline and that their use in several key industry sectors either may have been eliminated or may have been in the process of being phased out (Exs. 11–18, 19B, 28, 29A, 48, 53, 58; Ex. 302–X, pp. 596–600). By the close of the record, there was testimony that 2–MEA production had been phased out completely. There also had been a significant decline in production of the remaining glycol ethers since 1987. The vast majority of the 2–EE produced in 1991 was used as a chemical intermediate to produce 2–EEA, of which nearly 75% was exported; 2–EEA production for paints and coatings had been reduced by almost three-quarters since 1987; and most of 2–ME production was planned to be phased out by 1996 (Exs. 29A, 58). The evidence in the record indicated that less than one-half of the 11 major use categories that had been identified in OSHA's preliminary economic analysis remained (Ex. 58; Ex. 302–X, pp. 596–600).

Evidence also was submitted that the four ethylene glycol ethers were being shifted out of several critical uses. Evidence indicated that these glycol ethers were no longer being used in the auto refinishing industry (Exs. 24, 53), which accounted for about 86 percent of the affected establishments and 57

percent of all exposed workers (58 FR 15583). The targeted glycol ethers also had been discontinued in construction paints and were being replaced in surface coatings, printing inks, and in the semiconductor industry (Exs. 28, 48,11–18, 19–B). (More recent public information confirms this downward trend in the production and use of these glycol ethers. Environmental Protection Agency Toxic Release Inventory, *http://www.epa.gov/opptintr/tri*.)

OSHA has decided to re-open the rulemaking record, which is now 9½ years old, to seek up-to-date information about the extent to which 2–ME, 2–EE, 2–MEA and 2–EEA are currently used. OSHA requests comments and data from interested persons about whether the four glycol ethers are still in use, including information about the level of production, the industries and processes in which they are still used, and employee exposure levels.

OSHA also requests information on substitutes for these glycol ethers that are currently used, including information on the volume of usage, levels of employee exposure to the substitutes, and toxicity of the substitutes. As noted in the proposal, the four glycol ethers have been shown to be potent reproductive and developmental toxins. The Agency is interested in information related to the types of risks that any substitutes may pose to workers. OSHA will use the information gathered during this re-opening to make determinations about how to proceed with the Glycol Ethers rulemaking.

Authority and Signature

This document was prepared under the direction of John L. Henshaw, Assistant Secretary of Labor for Occupational Safety and Health, U.S. Department of Labor. It is issued pursuant to section 6(b) of the Occupational Safety and Health Act of 1970 (84 Stat. 1594, 29 U.S.C. 655), 29 CFR 1911.18, and Secretary's Order 3–2000.

Signed at Washington, DC, this 2nd day of August, 2002.

John L. Henshaw,

Assistant Secretary of Labor.

[FR Doc. 02–20001 Filed 8–7–02; 8:45 am]

BILLING CODE 4510–26–P

ENVIRONMENTAL PROTECTION AGENCY

40 CFR Part 51

[FRL–7256–9]

Amendment to State Implementation Plan (SIP) Procedural Regulations

AGENCY: Environmental Protection Agency (EPA).

ACTION: Proposed rule.

SUMMARY: The EPA proposes to amend its procedural regulations regarding State Implementation Plans under the Clean Air Act (CAA) to clarify that such plans, when approved by EPA, are fully enforceable and binding upon all entities affected by the plans, and that any interpretations of relevant law or application of law to specific facts contained in EPA's rulemaking action on such plans shall have full force and effect of law as precedent for any future EPA rulemaking action on similar plans. Further, EPA proposes to clarify that the agency will apply the CAA and implementing regulations in like manner to like situations, and will explain any deviations from past practice based upon factual differences in different areas or developing interpretations of applicable law in future plan approval or disapproval actions, through notice-and-comment rulemaking.

DATES: Comments must be received on or before September 9, 2002.

ADDRESSES: All comments should be submitted to Docket #A–2002–10, Office of Air and Radiation Docket and Information Center, 1200 Pennsylvania Avenue, NW., Mail Code 6102, Washington, DC 20460, phone number (202) 260–7548. The normal business hours are 7:30 a.m. to 5:30 p.m. Comments can either be submitted to the address above, by fax (202) 260–4400, or by e-mail to *A-and-R-Docket@epa.gov*.

FOR FURTHER INFORMATION CONTACT: Ms. Denise M. Gerth, Office of Air Quality Planning and Standards, U.S. Environmental Protection Agency, Mail Code C–539–02, Research Triangle Park, NC 27711, phone number (919) 541–5550 or by e-mail at: *gerth.denise@epa.gov.*

SUPPLEMENTARY INFORMATION: States adopt SIPs under section 110 of the CAA providing for implementation of national ambient air quality standards (NAAQS) within their boundaries. Such SIPs are subsequently approved or disapproved by EPA pursuant to notice-and-comment rulemaking under the Administrative Procedure Act. *Buckeye Power, Inc.* v. *EPA*, 481 F.2d 162 (6th Cir. 1973). Under clearly established case law, once approved by EPA, these SIPs have full force and effect of law and are fully enforceable and binding upon all entities affected by the plans. *Union Electric Co.* v. *EPA*, 515 F.2d, 206 (8th Cir. 1975).

For a number of years, EPA had included certain language in the preambles to its rulemaking actions approving or disapproving submitted SIPs indicating that ''[n]othing in this action should be construed as permitting, allowing or establishing a precedent for any future request for revision to any SIP. U.S. EPA shall consider each request for revision to the SIP in light of specific technical, economic, and environmental factors and in relation to relevant statutory and regulatory requirements.'' (58 FR 48312, September 15, 1993). By this language, EPA had intended to convey to States contemplating prospective SIP revisions that EPA's approval or disapproval of any SIP would depend on the specific facts and law applicable to the SIP revision at issue, and that States could not be guaranteed an identical result to that reached in any prior SIP action. The purpose of this language was not to leave the approved SIPs without the force and effect of law as to regulated parties, nor to deprive the rulemaking actions regarding SIP submissions of the precedential effect they necessarily have regarding subsequent EPA rulemaking actions. In fact, although EPA certainly has the ability to adjust its policies and rulings in light of experience and to announce new principles through rulemaking procedures, EPA may not depart from its prior rules of decision to reach a different result in future cases without fully explaining such discrepancies and taking comment on the appropriateness of the resulting action. *Western States Petroleum Association, et al.,* v. *EPA, et al.*, 87 F.3d 280 (9th Cir. 1996).

In a recent decision concerning a SIP revision in Nevada, the Court of Appeals for the Ninth Circuit, while acknowledging that SIPs are enforceable against regulated parties, interpreted the language EPA had included in the SIP warning States that they could not be guaranteed a given result in future SIP revision requests as limiting the binding precedential effect of EPA's action approving the SIP. *Hall* v. *EPA*, 273 F.3d 1146 (9th Circuit 2001). As noted above, EPA did not intend this result, and further the agency believes that in light of existing law concerning Agency rulemaking, EPA could not impose such a restriction on its actions in any event.

Thus, EPA is proposing to amend its regulations to clarify that all EPA actions on SIPs do have full force and effect of law and binding precedential effect.

Under the proposed rule, all approved SIPs are fully enforceable, and all EPA actions approving or disapproving SIPs have binding precedential effect. Where EPA proposes in any future SIP action to make any deviations from past practice based upon factual differences in different areas or developing interpretations of applicable law, EPA will do so through full notice-and-comment rulemaking in future plan approval or disapproval actions.

Administrative Requirements

A. Office of Management and Budget (OMB) Review

Under Executive Order 12866 (58 FR 51735, October 4, 1993), the Agency must determine whether the regulatory action is ''significant'' and therefore subject to OMB review and the requirements of the Executive Order. It has been determined that this is not a ''significant regulatory action'' under the terms of Executive Order 12866 and is therefore not subject to OMB review.

B. Federalism

This proposed rule does not have federalism implications. It will not have substantial direct effects on the States, on the relationship between the national government and the States, or on the distribution of power and responsibilities among the various levels of government, as specified in Executive Order 13132. This proposed rule is procedural in nature. Thus, Executive Order 13132 does not apply to this rule.

In the spirit of Executive Order 13132, and consistent with EPA policy to promote communications between EPA and State and local governments, EPA specifically solicits comment on this proposed rule from State and local officials.

C. Protection of Children From Environmental Health Risks and Safety Risks

Executive Order 13045 (62 FR 19885, April 23, 1997) applies to any rule that: (1) Is determined to be ''economically significant'' as defined under Executive Order 12866, and (2) concerns an environmental health or safety risk that EPA has reason to believe may have a disproportionate effect on children. If the regulatory action meets both criteria, the Agency must evaluate the environmental health or safety effects of the planned rule on children, and explain why the planned regulation is preferable to other potentially effective and reasonably feasible alternatives considered by the Agency. The EPA interprets Executive Order 13045 as applying only to those regulatory actions that are based on health or safety risks, such that the analysis required under section 5–501 of the Order has the potential to influence the regulation. This rule is not subject to Executive Order 13045 because it does not establish an environmental standard intended to mitigate health or safety risks.

D. Consultation and Coordination with Indian Tribal Governments

Executive Order 13175 (65 FR 67249, November 9, 2000) requires EPA to develop an accountable process to ensure ''meaningful and timely input by tribal officials in the development of regulatory policies that have tribal implications.'' This proposed rule does not have tribal implications, as specified in Executive Order 13175; thus the Order does not apply to this rule.

E. Actions Concerning Regulations that Significantly Affect Energy Supply, Distribution or Use

This rule is not subject to Executive Order 13211 (66 FR 28355, May 22, 2001) because it is not a significant regulatory action under Executive Order 12866.

F. Unfunded Mandates Reform Act

This rule contains no Federal mandates (under the provisions of Title II of the Unfunded Mandates Reform Act) for State, local, or tribal governments or the private sector because this rule imposes no enforceable duty on any State, local or tribal governments or the private sector.

G. Regulatory Flexibility Act (RFA), as Amended by the Small Business Regulatory Enforcement Fairness Act (SBREFA)

This proposed rule is not subject to the RFA, which generally requires an agency to prepare a regulatory flexibility analysis for any rule that will have a significant economic impact on a substantial number of small entities. The RFA applies only to rules subject to notice-and-comment under the Administrative Procedures Act (APA) or any other statute. While this action is subject to notice-and-comment under the APA, a RFA is not necessary because this action does not impose any significant impacts on a substantial number of small entities. This rule doesn't impose any obligations on such entities; it just recognizes the precedential impact of SIP approvals.

H. National Technology Transfer and Advancement Act of 1995

Section 12(d) of the National Technology Transfer and Advancement Act of 1995 (''NTTAA''), Public Law 104–113, section 12(d) (15 U.S.C. 272 note) directs EPA to use voluntary consensus standards in its regulatory activities unless to do so would be inconsistent with applicable law or otherwise impractical. Voluntary consensus standards are technical standards (e.g., materials specifications, test methods, sampling procedures, and business practices) that are developed or adopted by voluntary consensus standards bodies. The NTTAA directs EPA to provide Congress, through OMB, explanations when the Agency decides not to use available and applicable voluntary consensus standards. This proposed rulemaking does not involve technical standards. Therefore, EPA is not considering the use of any voluntary consensus standards.

I. Paperwork Reduction Act

Today's action does not establish any new information collection requirements beyond those which are currently required under the Ambient Air Quality Surveillance Regulations in 40 CFR part 58 (OMB #2060–0084, EPA ICR No. 0940.15). Therefore, the requirements of the Paperwork Reduction Act do not apply to today's action.

Dated: August 1, 2002.

Elizabeth Craig,

Acting Assistant Administrator for Air and Radiation.

Part 51, subpart F, Title 40 of the Code of Federal Regulations is proposed to be amended as follows:

PART 51—REQUIREMENTS FOR PREPARATION, ADOPTION, AND SUBMITTAL OF IMPLEMENTATION PLANS

1. The authority citation for part 51 continues to read as follows: 42 U.S.C. 7401–7671q.

§ 51.105 [Amended]

2. Section 51.105 is amended by redesignating the existing paragraph as paragraph (a) and adding a new paragraph (b) to read as follows:

(b) All plans, or any portions thereof or revisions thereto, that have been approved by EPA shall be fully enforceable and binding upon all entities affected by the plans or revisions, and any interpretations of relevant law or application of law to

specific facts contained in EPA's rulemaking action approving or disapproving such plans and revisions shall have full force and effect of law as precedent for any future EPA rulemaking action on similar plans and revisions under applicable provisions of the Clean Air Act and EPA's implementing regulations. The EPA shall apply the Act and implementing regulations in like manner to like situations, and will explain any deviations from past practice based upon factual differences in different areas or developing interpretations of applicable law in future SIP approval or disapproval actions through notice-and-comment rulemaking.

[FR Doc. 02–20097 Filed 8–7–02; 8:45 am]

BILLING CODE 6560–50–P

ENVIRONMENTAL PROTECTION AGENCY

40 CFR Part 52

[NC–96; 97–200231(b); FRL–7254–1]

Approval and Promulgation of Implementation Plans: North Carolina: Permitting Rules and Other Miscellaneous Revisions

AGENCY: Environmental Protection Agency (EPA).

ACTION: Proposed rule.

SUMMARY: EPA is proposing to approve a State Implementation Plan (SIP) revision submitted by the State of North Carolina, through the North Carolina Department of Environmental and Natural Resources (NCDENR), on April 16, 2001. These revisions include the adoption of rules 15A NCAC 2D .0611 through .0615, the amending of .0501, .0903 and multiple rules within Chapter .0600 Monitoring: Recordkeeping: Reporting, the adoption of rules 15A NCAC 2Q .0316 and .0317 and the amending of rules .0109, .0803 and .0805 through .0808. In the Final Rules Section of this **Federal Register**, the EPA is approving the North Carolina SIP revision as a direct final rule without prior proposal because the Agency views this as a noncontroversial submittal and anticipates no adverse comments. A detailed rationale for the approval is set forth in the direct final rule. If no significant material and adverse comments are received in response to this rule, no further activity is contemplated. If EPA receives adverse comments, the direct final rule will be withdrawn and all public comments received will be addressed in a subsequent final rule based on this rule. The EPA will not institute a second comment period on this document. Any parties interested in commenting on this document should do so at this time.

DATES: Written comments must be received on or before September 9, 2002.

ADDRESSES: All comments should be addressed to: Randy Terry at the EPA, Region 4 Air Planning Branch, 61 Forsyth Street, SW, Atlanta, Georgia 30303–8960.

Copies of documents relative to this action are available at the following addresses for inspection during normal business hours:

Environmental Protection Agency, Region 4, Air Planning Branch, 61 Forsyth Street, SW, Atlanta, Georgia 30303–8960.

North Carolina Department of Environment and Natural Resources, 512 North Salisbury Street, Raleigh, North Carolina 27604.

FOR FURTHER INFORMATION CONTACT: Randy Terry, Regulatory Development Section, Air Planning Branch, Air, Pesticides and Toxics Management Division, Region 4, Environmental Protection Agency, Atlanta Federal Center, 61 Forsyth Street, SW, Atlanta, Georgia 30303–8960. The telephone number is (404) 562–9032. Mr. Terry can also be reached via electronic mail at *terry.randy@epa.gov.*

SUPPLEMENTARY INFORMATION: For additional information see the direct final rule which is published in the Rules section of this **Federal Register**.

Dated: July 10, 2002.

A. Stanley Meiburg,

Acting Regional Administrator, Region 4.

[FR Doc. 02–19436 Filed 8–7–02; 8:45 am]

BILLING CODE 6560–50–P

ENVIRONMENTAL PROTECTION AGENCY

40 CFR Parts 122 and 450

[FRL–7257–1]

RIN 2040–AD42

Effluent Limitation Guidelines and New Source Performance Standards for the Construction and Development Category; Public Meetings and Change of Location for Water Docket

AGENCY: Environmental Protection Agency (EPA).

ACTION: Proposed rule.

SUMMARY: EPA is announcing public information meetings and a change in the location of the Water Docket.

DATES: The public meetings will be held on Thursday, September 5, 2002 and September 18, 2002. The Water Docket will be closed during August 12 to 26, 2002 and will open at a new location on August 27, 2002. See ''Supplementary Information'' for detailed information.

FOR FURTHER INFORMATION CONTACT: Eric Strassler, EPA, e-mail *strassler.eric@epa.gov* or telephone 202–566–1026.

SUPPLEMENTARY INFORMATION: EPA published a proposed rule for the Construction and Development Category on June 24, 2002 (67 FR 42644) and is conducting public meetings. No registration is required for these meetings. Seating will be provided on a first-come, first-served basis.

- Thursday, September 5, 2002. 9 a.m.–noon. Sheraton Atlanta Hotel, 165 Courtland St., Atlanta, GA. Phone 404–659–6500.
- Wednesday, September 18, 2002. 9 a.m.–noon. EPA East Building, Room 1153, 1201 Constitution Avenue, NW., Washington, DC. Please note that parking is very limited in downtown Washington and use of public transit is recommended. The EPA Headquarters complex is located near the Federal Triangle Metro subway station. Upon exiting the Metro station, walk on 12th Street to Constitution Avenue, and turn right to proceed to the EPA East Building entrance.

Meeting Access: If you need special accommodations at these meetings, including wheelchair access, please contact the Eastern Research Group Conference Registration Line at 781–674–7374, at least five business days before the meeting so that appropriate arrangements can be made.

During the meetings, EPA will present information on the applicability of the proposed regulation, the technology options selected as the basis for the proposed limitations and standards, and the compliance costs and pollutant reductions. EPA will also allow time for questions and answers during these sessions. These meetings are not public hearings for the purpose of obtaining comment on the proposal. EPA will not generate a transcript of the meetings. The public may submit written comments by mail or electronically as described in the June 24, 2002 proposal. Instructions for hand delivery of written comments is provided below.

The public record for the proposed rule is available for review in EPA's Water Docket, under Docket No. W–02–06. The Water Docket will close temporarily to prepare for moving to a new location. The closure dates are August 12 to 26, 2002. The new Water Docket address is EPA West Building, Room B135, 1301 Constitution Avenue,

NW., Washington, DC, 20004. The docket will reopen on Tuesday, August 27, 2002. Beginning on that date, please call the new docket phone number, 202–566–2426, to schedule an appointment. For hand deliveries of comments on or after that date, submit such comments to the new address.

Additional information about the proposed rule is available on EPA's Web site at *http://www.epa.gov/waterscience/guide/construction/*.

Dated: August 1, 2002.

Geoffrey H. Grubbs,

Director, Office of Science and Technology.

[FR Doc. 02–20098 Filed 8–7–02; 8:45 am]

BILLING CODE 6560–50–P

ENVIRONMENTAL PROTECTION AGENCY

40 CFR Part 300

[FRL–7257–2]

National Oil and Hazardous Substance Pollution Contingency Plan; National Priorities List

AGENCY: Environmental Protection Agency.

ACTION: Notice of intent to delete the Del Norte County Pesticide Storage Area Superfund Site from the National Priorities List.

SUMMARY: The Environmental Protection Agency (EPA) Region IX is issuing a Notice of Intent to Delete the Del Norte County Pesticide Storage Area Superfund Site (Site) located in Crescent City, California, from the National Priorities List (NPL) and requests public comments on this Notice of Intent to Delete. The NPL, promulgated pursuant to section 105 of the Comprehensive Environmental Response, Compensation, and Liability Act of 1980 (CERCLA), as amended, is found at appendix B of 40 CFR part 300, which is the National Oil and Hazardous Substances Pollution Contingency Plan (NCP). The EPA and the State of California, through the California Department of Toxic Substances Control (DTSC), have determined that all appropriate response actions under CERCLA, other than Operation and Maintenance and Five-Year Reviews, have been completed. However, this deletion does not preclude future actions under CERCLA.

DATES: Comments concerning this Site must be received by September 9, 2002.

ADDRESSES: Written comments should be addressed to: Beatriz Bofill, Remedial Project Manager, U.S. EPA, Region IX, SFD–7–2, 75 Hawthorne Street, San Francisco, CA 94105–3901, (415) 972–3260 or (800) 231–3075.

Information Repositories: Comprehensive information on this Site is available through the Region IX public docket which is available for viewing at the EPA Region IX Superfund Records Center, 95 Hawthorne Street, San Francisco, CA 94105–3901, (415) 536–2000 (Monday through Friday 8 a.m. to 5 p.m.); Crescent City Library, 190 Price Mall, Crescent City, CA 95531, (707) 464–9793 (Monday, Tuesday, Thursday and Friday 10 a.m. to 6 p.m., Wednesday 10 a.m. to 8 p.m., Saturday 10 a.m. to 2 p.m., Sunday closed).

FOR FURTHER INFORMATION CONTACT: Beatriz Bofill, Remedial Project Manager, U.S. EPA, Region IX, SFD–7–2, 75 Hawthorne Street, San Francisco, CA 94105–3901, (415) 972–3260 or (800) 231–3075; or Viola Cooper, Community Involvement Coordinator, U.S. EPA, Region IX, SFD–3, 75 Hawthorne Street, San Francisco, CA 94105–3901, (415) 972–3243 or (800) 231–3075.

SUPPLEMENTARY INFORMATION:

Table of Contents

I. Introduction
II. NPL Deletion Criteria
III. Deletion Procedures
IV. Basis for Site Deletion

I. Introduction

The U.S. EPA Region IX is publishing this Notice of Intent to Delete the Del Norte County Pesticide Storage Area Superfund Site from the NPL and requests public comment on this proposed action. The NPL constitutes appendix B of 40 CFR part 300, which is the National Oil and Hazardous Substances Pollution Contingency Plan, which EPA promulgated pursuant to section 105 of CERCLA, as amended. The EPA identifies sites that appear to present a significant risk to public health, welfare, or the environment, and maintains the NPL as the list of those sites. As described in § 300.425(e)(3) of the NCP, sites deleted from the NPL remain eligible for remedial action in the unlikely event that conditions at the site warrant such action.

EPA will accept comments on the proposal to delete this Site for thirty (30) days after publication of this document in the **Federal Register**.

Section II of this document explains the criteria for deleting sites from the NPL. Section III discusses procedures that EPA is following specifically for this Site. Section IV discusses the Del Norte County Pesticide Storage Area Superfund Site and demonstrates how it meets the deletion criteria.

Deletion of a site from the NPL does not itself create, alter, or revoke any individual's rights or obligations. The NPL is designed primarily for informational purposes and to assist EPA management.

II. NPL Deletion Criteria

Section 300.425(e) of the NCP provides that sites may be deleted from the NPL where no further response is appropriate. In making a determination to delete a site from the NPL, EPA, in consultation with the State, shall consider whether any of the following criteria have been met:

i. Responsible parties or other persons have implemented all appropriate response actions required; or

ii. All appropriate Fund-financed (Hazardous Substance Superfund Response Trust Fund) response under CERCLA has been implemented, and no further response action by responsible parties is appropriate; or

iii. The remedial investigation has shown that the release poses no significant threat to public health or the environment and, therefore, the taking of remedial measures is not appropriate.

CERCLA section 101(25) defines response as removal and remedial actions, and does not include operation and maintenance activities. Accordingly, a site may be deleted from the NPL where only operation and maintenance activities remain. Even if a site is deleted from the NPL, where hazardous substances, pollutants, or contaminants remain at the deleted site above levels that allow for unlimited use and unrestricted exposure, CERCLA section 121(c), 42 U.S.C. 9621(c) requires that a subsequent review of the site be conducted at least every five years after the initiation of the remedial action at the deleted site to ensure that the action remains protective of public health and the environment. If new information becomes available which indicates a need for further action, EPA may initiate remedial actions. Whenever there is a significant release from a site deleted from the NPL, the deleted site may be restored to the NPL without application of the Hazard Ranking System (40 CFR 300.425(e)(3)).

III. Deletion Procedures

The following procedures apply to deletion of the Site:

(1) A ROD Amendment documents the technical infeasibility of reaching the Maximum Contaminant Level (MCL) for 1,2-dichloropropane (1,2-DCP).

(2) All remedial action has been implemented as is documented in the

Final Close Out Report (FCOR), dated July 19, 2002.

(3) The EPA consulted with the State of California on the deletion of the Site from the NPL prior to developing this Notice of Intent to Delete.

(4) The State of California concurred with deletion of the Site from the NPL.

(5) A notice has been published in the local newspaper and has been distributed to appropriate federal, state, and local officials and other interested parties announcing the commencement of a 30-day public comment period on EPA's Notice of Intent to Delete.

(6) The EPA placed copies of documents supporting the deletion in the Site information repositories identified above.

For deletion of this Site, EPA's Regional Office will accept and evaluate public comments before making a final decision to delete. If comments are received, EPA will prepare a Responsiveness Summary to address those comments. The Responsiveness Summary will be available for review in the Deletion Docket. The Deletion Docket is a compilation of documents containing all pertinent information supporting the deletion recommendation.

A deletion occurs when the Regional Administrator places a final notice in the **Federal Register**. Generally, the NPL will reflect deletions in the final update following the notice. Public notices and copies of the Responsiveness Summary will be made available to local residents by the Regional Office.

IV. Basis for Site Deletion

The following information provides EPA's rationale for deleting the Site from the NPL:

Site Location

The Del Norte County Pesticide Storage Area Site, located approximately one mile northwest of Crescent City, California, consists of less than one acre of land which had been contaminated with a variety of herbicides, pesticides, and other compounds. The Site is located in a rural area immediately south of McNamara Field, the airport that serves Del Norte County. The property is zoned manufacturing performance.

In December 1969, the Del Norte County Sanitarian notified the North Coast Regional Water Quality Control Board (NCRWQCB) of the County's intent to operate a pesticide container storage area. During 1970, the Site was designated by the NCRWQCB as a Class II–2 disposal site to serve as a County-wide collection point for interim or emergency storage of pesticide containers generated by local agricultural and forestry-related industries.

The pesticide container storage area operated from 1970–1981. Soil and groundwater contamination was discovered in the fall of 1981, indicating that the pesticide containers had been rinsed on-site, and that the residues and rinseates were improperly disposed of in a bermed, unlined sump area. In 1982, approximately 1,150 containers were removed from the Site. Preliminary investigations from 1981–1983, by NCRWQCB and California Department of Health Services, identified soil and groundwater contamination with herbicides, pesticides and volatile and semivolatile compounds. Del Norte County's inability to fund further Site investigations initiated the process of listing the Site on the NPL in the fall of 1983.

Remedial Investigation and Feasibility Study (RI/FS)

EPA produced a Remedial Investigation/Feasibility Study (RI/FS) Final Report on September 13, 1985. The RI/FS established that operations at the storage area resulted in contamination of soil and groundwater with herbicides, pesticides, volatile and semi-volatile compounds. Because the contamination had reached the groundwater, use of the contaminated groundwater as a water supply would result in a significant health risk. One Contaminant of Concern (COC), 1,2-DCP, had migrated downgradient of the storage area to a distance of about 150 to 300 feet in the southeasterly direction from the sump area. There was no spread of soil contamination due to wind or runoff detected beyond the storage area boundaries. There was also widespread detection of chromium in soil and groundwater, both on- and off-site, which required further investigation to determine whether it was the highly toxic hexavalent form or whether it was trivalent chromium, which is much less toxic.

Response Actions

EPA's September 30, 1985 Record of Decision (ROD) selected a Site remedy of excavation and off-site disposal of contaminated soils as well as extraction and treatment of the contaminated groundwater. The selected groundwater remedy consisted of: (1) Carbon adsorption for removal of organics and pesticides and (2) coagulation and sand filtration for removal of chromium. The ROD utilized the drinking water MCL of 100 micrograms/Liter (μg/L) as the groundwater cleanup goal for 2,4-dichlorophenoxyacetic acid (2,4-D), and 50 parts per billion as the groundwater cleanup goal for Chromium. No MCL had been set for 1,2-DCP at that time, so a health-based advisory level of 10μg/L was chosen as the cleanup goal for 1,2-DCP. EPA continued to monitor the contaminants and conditions at the Site.

In August 1987, EPA used removal authorities to perform a Removal Action in which 290 cubic yards of contaminated soils were excavated and disposed of off-site at a licensed hazardous waste disposal facility. This action removed the contaminated soils in the sump area, thereby eliminating the source of additional incremental groundwater contamination.

An Explanation of Significant Differences (ESD) dated September 21, 1989 clarified that the chromium found at the Site was in fact trivalent chromium, not the significantly more toxic hexavalent form. Furthermore, data collected at the Site led to the conclusion that chromium levels were consistent with naturally occurring background levels. Therefore, it was determined that treatment of chromium in groundwater was not necessary and the ESD removed the chromium cleanup standard from the Site remedy.

Additionally, levels of 2,4-D were only detected above the MCL in two samples during the RI/FS, Remedial Design and Removal phases of the project. By 1989, 2,4-D was detected in only one well at a concentration of 20μg/L, supporting the conclusion that the cleanup criteria had been met. As a result, a 1998 ESD changed the original remedy of carbon filtration, coagulation, and sand filtration to aeration, which had not been selected in the 1989 ROD due to its ineffective removal of 2,4-D and chromium. The only COC remaining to be remediated was the presence of 1,2-DCP in the groundwater.

A pump and treatment system began extracting groundwater from one extraction well at the rate of 15 gallons per minute, and operated continuously from April 1990 to December 1994. After 1994, 1,2-DCP concentrations in the groundwater monitoring wells reached asymptotic levels ranging between 15μg/L and 40μg/L. In 1994, EPA installed an air sparging system to determine if the injection of air into the aquifer would enhance contaminant removal. No discernable changes in the levels of 1,2-DCP in groundwater were noted. The plume is stable and is not migrating vertically or laterally.

Cleanup Standards

Because treatment was no longer reducing the contaminant levels, an August 2000 ROD Amendment modified

the remedy to containment of the groundwater plume. In 1992, a MCL of 5µg/L was established, for 1,2-DCP. This MCL is an Applicable or Relevant and Appropriate Requirement (ARAR) for the groundwater cleanup at the Site. However, given the conclusions reached about the status of the 1,2-DCP plume, EPA's 2000 ROD Amendment concluded that the 5,000 foot plume was not migrating and that it was technically impracticable to restore the 1,2-DCP plume to the 5µg/L MCL. The 2000 ROD Amendment therefore waived this ARAR on the basis of Technical Impracticability.

Operation and Maintenance

On March 6, 2002, a Consent Decree (CD) was entered among EPA, DTSC and Del Norte County, which provides that Del Norte County will continue to provide monitoring at the Site with oversight by DTSC. Semiannual groundwater monitoring will be ongoing at the Site until levels of 1,2-DCP have dropped below the MCL and EPA makes a determination that monitoring is no longer necessary. Sampling methodology and protocol can be found in the Del Norte County Pesticide Storage Area Superfund Site Groundwater Monitoring Plan, dated June 6, 2001.

Institutional controls were established in the 2000 ROD Amendment and will be implemented through the CD. Controls for the Site include: (1) Restricting access to the Site to protect existing groundwater monitoring wells and to prevent use of contaminated groundwater; (2) Prohibiting use of contaminated groundwater; (3) Prohibiting the use of the Site (which is currently zoned for industrial purposes) for residences, hospitals for humans, public or private schools for persons under 21 years of age, or for day care centers for children; (4) Restricting the use of the Site to industrial/commercial purposes that do not interfere with the containment and monitoring of the contaminated groundwater, and that do not damage, alter, destroy, or compromise the integrity of the existing groundwater monitoring wells at the Site; (5) Prohibiting the installation and/or pumping of water-producing wells, including but not limited to water supply, irrigation and private wells on the Site; and (6) Prohibiting the installation and operation of any groundwater extraction wells in the area extending one mile from the boundary of the Site that would cause the plume of contaminated groundwater under the Site to move or that would cause contaminated groundwater under the Site to be brought to the surface. For any proposed groundwater extraction wells within the one mile area described above all, necessary information must be provided to the lead agency to demonstrate that the restrictions are met.

Five-Year Review

Because contaminants remain at the Site above the MCL, Five-Year Reviews are required by statute. A Five-Year Review was completed at the Site on December 27, 2000, and found the remedy to be protective of human health and the environment. Five-Year Reviews will continue to be conducted at this Site until contaminant levels are below cleanup levels. The next Five-Year Review will be completed by December 27, 2005.

Community Involvement

Public participation activities have been satisfied as required in CERCLA section 113(k), 42 U.S.C. 9613(k), and CERCLA section 117, 42 U.S.C. 9617. Documents in the Deletion Docket which EPA relied on for recommendation of the deletion from the NPL are available to the public in the information repositories.

Applicable Deletion Criteria/State Concurrence

All the completion requirements for this Site have been met as described in the FCOR dated July 19, 2002. The NPL provides that a site is eligible for deletion where ''all appropriate Fund-financed (Hazardous Substance Superfund Response Trust Fund) response under CERCLA has been implemented, and no further response action by responsible parties is appropriate,'' and where ''responsible parties or other parties have implemented all appropriate response actions required.'' The FCOR documents that Site monitoring and institutional controls have been implemented and ensure the protectiveness of the remedy. Site monitoring will continue, conducted under the supervision of DTSC, until levels of 1,2-DCP reach below the MCL.

EPA, with the concurrence of the State of California through its Department of Toxic Substances Control on July 22, 2002, finds that these criteria for deletion of the Site have been met. Consequently, EPA is proposing deletion of the Del Norte County Pesticide Storage Area Superfund Site from the NPL.

Dated: July 26, 2002.

Keith Takata,

Acting Regional Administrator, Region IX.

[FR Doc. 02-20099 Filed 8–7–02; 8:45 am]

BILLING CODE 6560–50–P

DEPARTMENT OF THE INTERIOR

Fish and Wildlife Service

50 CFR Part 17

RIN 1018–AH33

DEPARTMENT OF COMMERCE

National Oceanic and Atmospheric Administration

50 CFR Part 226

[I.D. 052002A]

RIN 0648–AQ03

Endangered and Threatened Wildlife and Plants; Designation of Critical Habitat for the Gulf Sturgeon

AGENCIES: Fish and Wildlife Service, Interior, and National Marine Fisheries Service (NMFS), National Oceanic and Atmospheric Administration (NOAA), Commerce.

ACTION: Proposed rule; notice of availability (NOA) of draft economic analysis, and correction on public hearing location.

SUMMARY: The U.S. Fish and Wildlife Service and the National Marine Fisheries Service, collectively ''the Services'' are announcing the availability of a draft economic analysis of the proposal to designate critical habitat for the Gulf sturgeon (*Acipenser oxyrinchus desotoi*). We are soliciting public comments on both the proposal and the draft economic analysis. We also are correcting the address of a public hearing to be held in Defuniak Springs, FL on August 20, 2002.

DATES: *Comments:* We are extending the comment period announced in the proposed rule, published at 67 FR 39106, to allow a 60–day comment period following this NOA.The revised comment period on both the proposed critical habitat designation and the draft economic analysis is now open and will close on October 7, 2002. We must receive comments from all interested parties by the closing date. Any comments that we receive after the closing date will not be considered. Comments previously submitted need not be resubmitted as they have already been incorporated into the public record and will be fully considered in the final rule.

Public Hearings: The Services have scheduled four public hearings from August 19 to 22, 2002, on the proposed critical habitat designation and the draft economic analysis. See **SUPPLEMENTARY INFORMATION** for details including locations, times and dates.

ADDRESSES: *Draft Economic Analysis:* Copies of the draft economic analysis are available on the Internet at *http://alabama.fws.gov/gs/* or by writing to or calling Patty Kelly, Panama City Field Office, U.S. Fish and Wildlife Service, 1601 Balboa Avenue, Panama City, FL 32405; telephone 850/769–0552.

Comments: If you wish to comment, you may submit your comments by any one of several methods:

1. You may submit written comments and information to the Project Leader, c/o Patty Kelly, Panama City Field Office, U.S. Fish and Wildlife Service, 1601 Balboa Avenue, Panama City, FL 32405.

2. You may hand-deliver written comments to our Panama City Field Office, at the above address or fax your comments to 850/763–2177.

3. You may send comments by electronic mail (e-mail) to *gulfsturgeon@fws.gov*. For directions on how to submit electronic filing of comments, see ''Public Comments Solicited.''

4. You may provide oral and/or written comments at any of the public hearings.

Comments and materials received, as well as supporting documentation used in preparation of this proposed rule, will be available for public inspection, by appointment, during normal business hours at the above address.

FOR FURTHER INFORMATION CONTACT: Patty Kelly, Fish and Wildlife Biologist, Panama City Field Office (see **ADDRESSES**) (telephone 850/769–0552, extension 228) with questions concerning units 1 to 7; or Stephania Bolden, NOAA Fisheries, at 9721 Executive Center Drive North, St. Petersburg, FL 33702–2449 (telephone 727/570–5312; facsimile 727/570–5517) with questions concerning units 8 to 14.

SUPPLEMENTARY INFORMATION:

Background

The Services listed the Gulf sturgeon as a threatened species under the Endangered Species Act of 1973, as amended (Act), on September 30, 1991 (56 FR 49653). On June 6, 2002, we published in the **Federal Register** a proposal to designate critical habitat for this species (67 FR 39106). The proposed designation includes portions of the following Gulf of Mexico rivers and tributaries as critical habitat for the Gulf sturgeon: Pearl and Bogue Chitto Rivers in Louisiana and Mississippi; Pascagoula, Leaf, Bowie (also referred to as Bouie), Big Black Creek and Chickasawhay Rivers in Mississippi; Escambia, Conecuh, and Sepulga Rivers in Alabama and Florida; Yellow, Blackwater, and Shoal Rivers in Alabama and Florida; Choctawhatchee and Pea Rivers in Florida and Alabama; Apalachicola and Brothers Rivers in Florida; and Suwannee and Withlacoochee River in Florida.

The proposal also includes portions of the following estuarine and marine areas: Lake Pontchartrain (east of the Lake Pontchartrain Causeway), Lake Catherine, Little Lake, The Rigolets, Lake Borgne, Pascagoula Bay and Mississippi Sound systems in Louisiana and Mississippi, and sections of the adjacent state waters within the Gulf of Mexico; Pensacola Bay system in Florida; Santa Rosa Sound in Florida; nearshore Gulf of Mexico in Florida; Choctawhatchee Bay system in Florida; Apalachicola Bay system in Florida; and Suwannee Sound and adjacent state waters within the Gulf of Mexico in Florida. These geographic areas encompass approximately 2,544 river kilometers (1,580 river miles) and 6,042 square kilometers (2,333 square miles) of estuarine and marine habitat.

Section 4(b)(2) of the Act requires that the Services designate or revise critical habitat based upon the best scientific data available and after taking into consideration the economic impact, and any other relevant impact, of specifying any particular area as critical habitat. We may exclude an area from critical habitat if we determine that the benefits of excluding the area outweigh the benefits of including the area as critical habitat, provided such exclusion will not result in the extinction of the species. Consequently, we have prepared a draft economic analysis concerning the proposed critical habitat designation, which is available for review and comment (see **ADDRESSES**).

Public Hearings

The Services have scheduled four public hearings on the proposed critical habitat designation and the draft economic analysis. We will hold public informational meetings prior to each public hearing at the hearing locations. The public information sessions will start at 5 p.m. and end at 6:30 p.m. The formal public hearings will start at 7 p.m. and end at 9 p.m. on the dates indicated.

(1) August 19, 2002, Suwannee River Water Management District, 9225 C.R. 49, Live Oak, FL 32060.

(2) August 20, 2002, Chautaugua Building, Museum Room, 96 Circle Drive, Defuniak Springs, FL 32435

(3) August 21, 2002, J. L. Scott Marine Education Center and Aquarium, 115 Beach Boulevard, Biloxi, MS 39530.

(4) August 22, 2002, Hilton New Orleans Airport, 901 Airline Drive, Kenner, LA 70062.

Public Comments Solicited

We solicit comments on the draft economic analysis, as well as any other aspect of the proposed designation of critical habitat for the Gulf sturgeon. Anyone wishing to make an oral statement for the record at the public hearings is encouraged to provide a written copy of their statement to us at the start of the hearing. In the event there is a large attendance, the time allotted for oral statements may have to be limited. Oral and written statements receive equal consideration. There are no limits to the length of written comments presented at the hearings or mailed to us. Our final economic analysis and final designation of critical habitat will take into consideration comments and any additional information received by the date specified above. The comment period for both the proposed rule and the draft economic analysis closes on [insert date 60 days after date of publication in the FEDERAL REGISTER]. All previous comments and information submitted during the comment period need not be resubmitted. Written comments may be submitted to the Project Leader (see **ADDRESSES**).

Please submit electronic comments as an ASCII file format and avoid the use of special characters and encryption. Please also include ''Attn: RIN 1018–A123'' and your name and return address in your e-mail message. If you do not receive a confirmation from the system that we have received your e-mail message, please contact us directly by calling our Panama City Field Office (see **ADDRESSES**).

Our practice is to make all comments, including names and home addresses of respondents, available for public review during regular business hours. Individual respondents may request that we withhold their home address from the rulemaking record, which we will honor to the extent allowable by law. In some circumstances, we would withhold from the rulemaking record a respondent's identity, as allowable by law. If you wish for us to withhold your name and/or address, you must state this prominently at the beginning of your comments. However, we will not consider anonymous comments. We will make all submissions from

organizations or businesses, and from individuals identifying themselves as representatives or officials of organizations or businesses, available for public inspection in their entirety.

Correction

In the proposed rule, published at 67 FR 39106, June 6, 2002, we inadvertently published an incorrect address for the location of the hearing to be held in Defuniak Springs, FL on August 20, 2002. The corrected address is provided in this notice under the heading ''Public Hearings.''

Authority

The authority for this action is the Endangered Species Act of 1973 (16 U.S.C. 1531 *et seq.*).

Dated: July 29, 2002.

Donald R. Knowles,

Director, Office of Protected Resources, National Marine Fisheries Service.

August 1, 2002.

Craig Manson

Assistant Secretary for Fish, Wildlife and Parks, Department of Interior.

[FR Doc. 02–20091 Filed 8–7–02; 8:45 am]

BILLING CODE 3510–22–S

Notices

Federal Register

Vol. 67, No. 153

Thursday, August 8, 2002

This section of the FEDERAL REGISTER contains documents other than rules or proposed rules that are applicable to the public. Notices of hearings and investigations, committee meetings, agency decisions and rulings, delegations of authority, filing of petitions and applications and agency statements of organization and functions are examples of documents appearing in this section.

DEPARTMENT OF AGRICULTURE

Forest Service

Fishtrap EIS, Lolo National Forest, Sanders County, MT

AGENCY: Forest Service, USDA.

ACTION: Notice; intent to prepare environmental impact statement.

SUMMARY: The Forest Service will prepare an environmental impact statement (EIS) on a proposal to implement timber harvest, precommercial thinning, prescribed burning, herbicide treatment of noxious weeds, abandonment of the Fishtrap grazing allotment, temporary road construction, road reconstruction and road decommissioning; and to correct management area mapping errors in the Lolo National Forest Land and Resource Management Plan (Forest Plan) in the Fishtrap Creek drainage, Lolo National Forest, Plains/Thompson Falls Ranger District, Sanders County, Montana.

This EIS will tier to the Lolo Forest Plan Final EIS (April, 1986).

DATES: Written comments should be received within 30 days following publication of this notice.

ADDRESSES: Please submit written comments on the proposed management activities or a request to be placed on the project mailing list to: Lisa Krueger, District Ranger, Plains/Thompson Falls Ranger District, Lolo National Forest, P.O. Box 429, Plains, Montana 59859.

FOR FURTHER INFORMATION CONTACT: Pat Partyka, EIS Team Leader, (406) 826–4314.

SUPPLEMENTARY INFORMATION: The Fishtrap analysis area of approximately 36,400 acres is located approximately 20 air miles north of Thompson Falls, Montana, Sanders County, in T23N, R28W; T23N, R29W; T24N, R27W; T24N, R28W; T24N, R29W; and T25N, R28W; PMM. Within this area, the Lolo National Forest proposes (1) Approximately 2921 acres of timber harvest; (2) approximately 1037 acres of precommercial thinning; (3) approximately 887 acres of prescribed burning; (4) approximately 2½ miles of temporary road construction to access some of the harvest units; (5) approximately 177 miles of road decommissioning; (6) approximately 30–35 miles of road reconstruction; (7) approximately 30 miles of herbicide treatment of noxious weeds along roadsides; (8) abandonment of the Fishtrap grazing allotment; and (9) to correct Forest Plan mapping errors in scattered parcels throughout the analysis area by changing an approximate net 625 acres from timber-suitable to unsuitable management areas. In addition to these proposals, the Forest Service will consider alternate road access to the Fishtrap Lake campground, which may include long-term specified road construction.

The Lolo National Forest Plan, 1986, provides overall guidance for land management activities in the project area. The purposes for these actions are to: (1) Improve water quality, fish habitat and fish passage; (2) Improve grizzly bear habitat within the Cabinet-Yaak Grizzly Bear Recovery Zone; (3) Restore, maintain or enhance native ''at risk'' vegetative communities, as identified in the Northern Region Overview, USDA 1998; (4) Provide for ecological sustainability and community stability through the use of forest products; (5) Improve and maintain big game winter range; (6) Provide for a transportation system that better reflects current access and resource concerns and reduces economic burdens associated with maintaining unneeded roads.

Issues currently identified for analysis in the EIS include potential effects on wildlife (particularly grizzly bear), water quality, fisheries and forest access.

The Forest Service will consider a range of alternatives. A No Action alternative and other alternatives, which respond to significant issues, will be developed, analyzed and compared in the Draft EIS.

The Draft EIS is expected to be filed with the Environmental Protection Agency (EPA) and available for public review in April 2003. Comments on the Draft EIS will be considered and responded to in the Final EIS, scheduled to be completed by August 2003.

The comment period on the draft environmental impact statement will be 45 days from the date the Environmental Protection Agency publishes the notice of availability in the **Federal Register**.

The Forest Service believes, at this early stage, it is important to give reviewers notice of several court rulings related to public participation in the environmental review process. First, reviewers of draft environmental impact statements must structure their participation in the environmental review of the proposal so that it is meaningful and alerts an agency to the reviewer's position and contentions. *Vermont Yankee Nuclear Power Corp.* v. *NRDC, 435 U.S. 519, 553 (1978).* Also, environmental objections that could be raised at the draft environmental impact statement stage but that are not raised until after completion of the final environmental impact statement may be waived or dismissed by the courts. *City of Angoon* v. *Hodel*, 803 F.2d 1016, 1022 (9th Cir. 1986) and *Wisconsin Heritages, Inc.* v. *Harris,* 490 F. Supp. 1334, 1338 (E.D. Wis. 1980). Because of these court rulings, it is very important that those interested in this proposed action participate by the close of the 45-day scoping comment period so that substantive comments and objections are made available to the Forest Service at a time when it can meaningfully consider them and respond to them in the final environmental impact statement.

To assist the Forest Service in identifying and considering issues and concerns on the proposed action, comments on the draft environmental impact statement should be as specific as possible. It is also helpful if comments refer to specific pages or chapters of the draft statement. Comments may also address the adequacy of the draft environmental impact statement or the merits of the alternatives formulated and discussed in the statement. Reviewers may wish to refer to the Council on Environmental Quality Regulations for implementing the procedural provisions of the National Environmental Policy Act at 40 CFR 1503.3 in addressing these points.

Responsible Official: Deborah L.R. Austin, Forest Supervisor, Lolo National Forest, Building 24—Fort Missoula,

Missoula, MT 59804, is the responsible official. In making the decision, the responsible official will consider comments, responses, disclosure of environmental consequences, and applicable laws, regulations, and policies. The responsible official will state the rationale for the chosen alternative in the Record of Decision.

Dated: August 2, 2002.

Deborah L.R. Austin,

Forest Supervisor.

[FR Doc. 02–20036 Filed 8–7–02; 8:45 am]

BILLING CODE 3410–11–M

DEPARTMENT OF AGRICULTURE

Forest Service

South Gifford Pinchot National Forest Resource Advisory Committee Meeting Notice

AGENCY: Forest Service, USDA.

ACTION: Notice of meeting.

SUMMARY: The South Gifford Pinchot National Forest Resource Advisory Committee will meet on Monday, August 19, 2002 at the Skamania County Public Works Department basement located in the Courthouse Annex, 170 N.W. Vancouver Avenue, Stevenson, Washington. The meeting will begin at 8:30 a.m. and continue until 6 p.m. The purpose of the meeting is to:

(1) Review and recommend for funding Title II projects for fiscal year 2003.

(2) Provide for a Public Open Forum.

All South Gifford Pinchot National Forest Resource Advisory Committee meetings are open to the public. Interested citizens are encouraged to attend. The ''open forum'' provides an opportunity for the public to bring issues, concerns, and discussion topics to the Advisory Committee. The ''open forum'' is scheduled as part of agenda item (2) for this meeting. Interested speakers will need to register prior to the open forum period. The committee welcomes the public's written comments on committee business at any time.

FOR FURTHER INFORMATION CONTACT: Direct questions regarding this meeting to Tom Knappenberger, Public Affairs Officer, at (360) 891–5005, or write Forest Headquarters Office, Gifford Pinchot National Forest, 10600 NE 51st Circle, Vancouver, WA 98682.

Dated: July 26, 2002.

Claire Lavendel,

Forest Supervisor.

[FR Doc. 02–20030 Filed 8–7–02; 8:45 am]

BILLING CODE 3410–11–M

DEPARTMENT OF COMMERCE

Foreign-Trade Zones Board

[Order No. 1237]

Grant of Authority For Subzone Status, Archer Daniels Midland, Inc. (Natural Vitamin E), Decatur, IL

Pursuant to its authority under the Foreign-Trade Zones Act of June 18, 1934, as amended (19 U.S.C. 81a-81u), the Foreign-Trade Zones Board (the Board) adopts the following Order:

Whereas, the Foreign-Trade Zones Act provides for ''* * * the establishment * * * of foreign-trade zones in ports of entry of the United States, to expedite and encourage foreign commerce, and for other purposes,'' and authorizes the Foreign-Trade Zones Board to grant to qualified corporations the privilege of establishing foreign-trade zones in or adjacent to U.S. Customs ports of entry;

Whereas, the Board's regulations (15 CFR part 400) provide for the establishment of special-purpose subzones when existing zone facilities cannot serve the specific use involved, and when the activity results in a significant public benefit and is in the public interest;

Whereas, the Decatur Park District, grantee of Foreign-Trade Zone 245, has made application to the Board for authority to establish special-purpose subzone status at the manufacturing facilities (vitamin E) of Archer Daniels Midland, Inc., located in Decatur, Illinois (FTZ Docket 29–2000, filed 6/13/2000; amended 6/6/2001);

Whereas, notices inviting public comment have been given in the **Federal Register** (65 FR 39123, 6/23/2000; 66 FR 32599, 6/15/2001); and,

Whereas, the Board adopts the findings and recommendations of the examiner's report, and finds that the requirements of the FTZ Act and the Board's regulations are satisfied, and that approval of the application would be in the public interest;

Now, therefore, the Board hereby grants authority for subzone status at the natural vitamin E manufacturing facilities of Archer Daniels Midland, Inc., located in Decatur, Illinois (Subzone 245A), at the locations described in the application, subject to the FTZ Act and the Board's regulations, including § 400.28.

Signed at Washington, DC, this 29th day of July, 2002.

Faryar Shirzad,

Assistant Secretary for Import Administration, Alternate Chairman, Foreign-Trade Zones Board.

[FR Doc. 02–20072 Filed 8–7–02; 8:45 am]

BILLING CODE 3510–DS–P

DEPARTMENT OF COMMERCE

Foreign-Trade Zones Board

[Order No. 1241]

Approval for Expansion of Subzone 124h, Bollinger Shipyards Lockport, LLC (Shipbuilding), Lafourche, Jefferson and Orleans Parishes, LA

Pursuant to its authority under the Foreign-Trade Zones Act of June 18, 1934, as amended (19 U.S.C. 81a–81u), the Foreign-Trade Zones Board (the Board) adopts the following Order:

Whereas, the Port of South Louisiana, grantee of FTZ 124, has requested authority on behalf of Bollinger Shipyards Lockport, LLC (Bollinger), to expand Subzone 124H to include six additional sites in Lafourche, Jefferson and Orleans Parishes, Louisiana (FTZ Docket 3–2002, filed 1/8/2002);

Whereas, notice inviting public comment has been given in the **Federal Register** (67 FR 1960, 1/15/02);

Whereas, the Board adopts the findings and recommendations of the examiner's report, and finds that the requirements of the FTZ Act and Board's regulations would be satisfied, and that approval of the application would be in the public interest if approval is subject to the conditions listed below;

Now, therefore, the Board hereby orders:

The application to expand Subzone 124H on behalf of Bollinger, is approved, subject to the FTZ Act and the Board's regulations, including § 400.28, and subject to the following conditions:

1. Any foreign steel mill products admitted to the subzone, including plate, angles, shapes, channels, rolled steel stock, bars, pipes and tubes, not incorporated into merchandise otherwise classified, and which is used in manufacturing, shall be subject to Customs duties in accordance with applicable law, unless the Executive Secretary determines that the same item is not then being produced by a domestic steel mill; and

2. In addition to the annual report, Bollinger Shipyards Lockport, LLC, shall advise the Board's Executive Secretary (§ 400.28(a)(3)) as to significant new contracts with appropriate information concerning foreign purchases otherwise dutiable, so that the Board may consider whether any foreign dutiable items are being imported for manufacturing in the subzone primarily because of subzone status and whether the Board should consider requiring Customs duties to be paid on such items.

Signed at Washington, DC, this 29th day of July 2002.

Faryar Shirzad,

Assistant Secretary for Import Administration, Alternate Chairman, Foreign-Trade Zones Board.

[FR Doc. 02–20075 Filed 8–7–02; 8:45 am]

BILLING CODE 3510–DS–P

DEPARTMENT OF COMMERCE

Foreign-Trade Zones Board

[Order No. 1239]

Approval for Expanded Manufacturing Authority (Industrial Diesel Engines, Parts of Industrial Robots), Within Foreign-Trade Subzone 15E, Kawasaki Motors Manufacturing Corp., U.S.A., Maryville, MO

Pursuant to its authority under the Foreign-Trade Zones Act of June 18, 1934, as amended (19 U.S.C. 81a-81u), the Foreign-Trade Zones Board (the Board) adopts the following Order:

Whereas, the Greater Kansas City Foreign-Trade Zone, Inc., grantee of FTZ 15, has requested authority on behalf of Kawasaki Motors Manufacturing Corp., U.S.A. (KMM), operator of FTZ Subzone 15E, located in Maryville, Missouri, to expand the scope of FTZ authority to include the manufacture of small, industrial diesel engines and industrial robot components under FTZ procedures (FTZ Doc. 5–2000, filed 3–1–2000);

Whereas, notice inviting public comment was given in the **Federal Register** (65 FR 12969, 3–10–2000);

Whereas, the Board adopts the findings and recommendations of the examiner's report, and finds that the requirements of the FTZ Act and the Board's regulations are satisfied, and that approval of the application is in the public interest;

Now therefore, the Board hereby approves the request subject to the FTZ Act and the Board's regulations, including Section 400.28.

Signed at Washington, DC, this 29th day of July 2002.

Faryar Shirzad,

Assistant Secretary of Commerce for Import Administration, Alternate Chairman, Foreign-Trade Zones Board.

[FR Doc. 02–20073 Filed 8–7–02; 8:45 am]

BILLING CODE 3510–DS–P

DEPARTMENT OF COMMERCE

Foreign-Trade Zones Board

[Order No. 1240]

Expansion of Foreign-Trade Zone 57, Charlotte, NC, Area

Pursuant to its authority under the Foreign-Trade Zones Act of June 18, 1934, as amended (19 U.S.C. 81a–81u), the Foreign-Trade Zones Board (the Board) adopts the following Order:

Whereas, the North Carolina Department of Commerce, grantee of Foreign-Trade Zone 57, submitted an application to the Board for authority to expand FTZ status to eight additional sites (2,045 acres) in the Counties of Burke, Caldwell, Alexander and Catawba in North Carolina (Sites 4–11), adjacent to the Charlotte Customs port of entry (FTZ Docket 30–2001; filed 7/3/01; amended 4/29/02);

Whereas, notice inviting public comment was given in the **Federal Register** (66 FR 36250, 7/11/01) and the application, as amended, has been processed pursuant to the FTZ Act and the Board's regulations; and,

Whereas, the Board adopts the findings and recommendations of the examiner's report, and finds that the requirements of the FTZ Act and Board's regulations are satisfied, and that the proposal, as amended, is in the public interest;

Now, therefore, the Board hereby orders:

The application, as amended, to expand FTZ 57 is approved, subject to the Act and the Board's regulations, including Section 400.28, and subject to the Board's standard 2,000-acre activation limit for the overall zone project, and further subject to a sunset provision that would terminate authority for the proposed sites on September 1, 2009, unless the sites are activated under FTZ procedures.

Signed at Washington, DC, this 29th day of July 2002.

Faryar Shirzad,

Assistant Secretary of Commerce for Import Administration, Alternate Chairman, Foreign-Trade Zones Board.

[FR Doc. 02–20074 Filed 8–7–02; 8:45 am]

BILLING CODE 3510–DS–P

DEPARTMENT OF COMMERCE

International Trade Administration

[A–570–007]

Barium Chloride From the People's Republic of China: Extension of Time Limit for Preliminary Results of Antidumping Duty Administrative Review

AGENCY: Import Administration, International Trade Administration, Department of Commerce.

EFFECTIVE DATE: August 8, 2002.

FOR FURTHER INFORMATION CONTACT: John Conniff or Howard Smith, AD/CVD Enforcement, Office 4, Group II, Import Administration, International Trade Administration, U.S. Department of Commerce, 14th Street and Constitution Avenue, NW., Washington, DC 20230; telephone (202) 482–1009 or (202) 482–5193, respectively.

SUPPLEMENTARY INFORMATION:

TIME LIMITS:

Statutory Time Limits

Section 751(a)(3)(A) of the Tariff Act of 1930, as amended (the Act), requires the Department of Commerce (the Department) to make a preliminary determination within 245 days after the last day of the anniversary month of an order or finding for which a review is requested and a final determination within 120 days after the date on which the preliminary determination is published. However, if it is not practicable to complete the review within these time periods, section 751(a)(3)(A) of the Act allows the Department to extend the 245–day time limit for the preliminary determination to a maximum of 365 days and the time limit for the final determination to 180 days (or 300 days if the Department does not extend the time limit for the preliminary determination) from the date of publication of the preliminary determination.

Background

On November 21, 2001, the Department published a notice of initiation of administrative review of the antidumping duty order on barium chloride from the People's Republic of China, covering the period October 1, 2000, through September 30, 2001. *See Initiation of Antidumping and Countervailing Duty Administrative Reviews and Request for Revocation in Part*, 66 FR 58432. On July 3, 2002, the Department published a notice extending the time limits for completing the preliminary results of its review until August 3, 2002. *See Barium*

Chloride From the People's Republic of China: Extension of Time Limit for Preliminary Results of Antidumping Duty Administrative Review 67 FR 45088 (July 3, 2002).

Extension of Time Limit for Preliminary Results of Review

We determine that it is not practicable to complete the preliminary results of this review within the current time limit. Therefore, the Department is extending the time limit for completion of the preliminary results until no later than October 31, 2002. *See* Decision Memorandum from Holly A. Kuga to Bernard T. Carreau, dated concurrently with this notice, which is on file in the Central Records Unit, Room B–099 of the Department's main building. We intend to issue the final results no later than 120 days after the publication of the preliminary results notice.

This extension is in accordance with section 751(a)(3)(A) of the Act.

Dated: August 2, 2002.

Bernard T. Carreau,

Deputy Assistant Secretary for Import Administration, Group II.

[FR Doc. 02–20080 Filed 8–7–02; 8:45 am]

BILLING CODE 3510–DS–S

DEPARTMENT OF COMMERCE

International Trade Administration

[A–823–812]

Antidumping Duty Investigation of Carbon and Certain Alloy Steel Wire Rod From Ukraine.

AGENCY: Import Administration, International Trade Administration, Department of Commerce.

ACTION: Notice to defer a decision regarding Ukraine's non-market economy status.

SUMMARY: The Department of Commerce is deferring its decision regarding Ukraine's non-market economy status beyond the instant investigation's final determination date of August 23, 2002, as provided in section 771(18)(C)(ii) of the Tariff Act of 1930, as amended.

DATE: August 8, 2002.

FOR FURTHER INFORMATION CONTACT: George Smolik, Import Administration, International Trade Administration, U.S. Department of Commerce, 14th Street and Constitution Avenue, NW., Washington, DC 20230; telephone: (202) 482–1843.

SUPPLEMENTARY INFORMATION:

The Applicable Statute

All citations to the Tariff Act of 1930, as amended (''the Act''), are references to the provisions effective January 1, 1995, the effective date of the amendments made to the Act by the Uruguay Round Agreements Act.

Background

The Government of Ukraine and Krivorozhstal, the sole respondent in the instant proceeding, have requested revocation of Ukraine's non-market economy (''NME'') status. In response to the request, the Department has invited and received public comments and rebuttal comments regarding Ukranian economic reforms. *See* 67 FR 19394 (April 19, 2002). In addition, the Department has compiled and analyzed information regarding Ukrainian economic reforms from independent third-party sources that we commonly cite for our decisions in this area.

Decision Deferral

The Department has developed a great deal of information regarding Ukraine's economic reforms. The information raises a broad range of issues that require additional time to evaluate before the Department makes a decision on this matter. The Department is therefore deferring its decision regarding Ukraine's non-market economy status beyond the instant investigation's final determination date of August 23, 2002. Since a country's NME status remains in effect until revoked, Ukraine will continue to be treated as a NME country for purpose of the instant final determination (*see* section 771(18)(C)(i) of the Act).

August 5, 2002.

Faryar Shirzad,

Assistant Secretary for Import Administration.

[FR Doc. 02–20238 Filed 8–7–02; 8:45 am]

BILLING CODE 3510–DS–P

DEPARTMENT OF COMMERCE

International Trade Administration

[A–570–878]

Initiation of Antidumping Duty Investigation: Saccharin from the People's Republic of China

AGENCY: Import Administration, International Trade Administration, Department of Commerce.

EFFECTIVE DATE: August 8, 2002.

FOR FURTHER INFORMATION CONTACT: Javier Barrientos or Sally Gannon, Import Administration, International Trade Administration, U.S. Department of Commerce, 14th Street and Constitution Avenue, NW., Washington, DC 20230; telephone: (202) 482–2243, (202) 482–0162, respectively.

SUPPLEMENTARY INFORMATION:

Initiation Of Investigation

The Applicable Statute and Regulations

Unless otherwise indicated, all citations to the statute are references to the Tariff Act of 1930 (''Act''), as amended. In addition, unless otherwise indicated, all citations to the Department of Commerce's (''Department'') regulations are to 19 CFR Part 351 (2002).

The Petition

On July 11, 2002, the Department received a petition on imports of saccharin from the People's Republic of China (''PRC'') filed in proper form by PMC Specialities Group, Inc., hereinafter referred to as ''the Petitioner.'' On July 23, 2002, the Department requested clarification of certain areas of the petition and received a response on July 26, 2002.

In accordance with section 732(b) of the Act, the Petitioner alleges that imports of saccharin from the PRC are being, or are likely to be, sold in the United States at less than fair value within the meaning of section 731 of the Act, and that such imports are materially injuring, and threatening material injury to, an industry in the United States.

The Petitioner is a saccharin producer and accounts for over fifty percent of domestic production of saccharin, as defined in the petition. Therefore, the Department finds that the Petitioner has standing to file the petition because it is an interested party as defined under section 771(9)(C) of the Act, with respect to the merchandise subject to this investigation. The Petitioner has demonstrated sufficient industry support with respect to the antidumping duty investigation, which it is requesting the Department to initiate (*see* ''Determination of Industry Support for the Petition'' below).

Scope of Investigation

The product covered by this investigation is saccharin. Saccharin is a non-nutritive sweetener used in beverages and foods, personal care products such as toothpaste, table top sweeteners, and animal feeds. It is also used in metalworking fluids. There are four primary chemical compositions of saccharin: (1) sodium saccharin (American Chemical Society Chemical Abstract Service (''CAS'') Registry 128–44–9); (2) calcium saccharin (CAS Registry 6485–34–3); (3) acid (or insoluble) saccharin (CAS Registry 81–

07–2); and (4) research grade saccharin. Most of the U.S.-produced and imported grades of saccharin from the PRC are sodium and calcium saccharin, which are available in granular, powder, spray-dried powder, and liquid forms.

The merchandise subject to this investigation is classifiable under subheading 2925.11.00 of the Harmonized Tariff Schedule of the United States (HTSUS) and includes all types of saccharin imported under this HTSUS subheading, including research and specialized grades.[1] Although the HTSUS subheading is provided for convenience and Customs purposes, the Department's written description of the scope of this investigation remains dispositive.

During our review of the petitions, we discussed the scope with the petitioner to ensure that it accurately reflects the product for which the domestic industry is seeking relief. Moreover, as discussed in the preamble to the Department's regulations (62 FR 27323), we are setting aside a period for parties to raise issues regarding product coverage. The Department encourages all parties to submit such comments within 20 calendar days of the publication of this notice. Comments should be addressed to Import Administration's Central Records Unit at Room 1870, U.S. Department of Commerce, 14th Street and Constitution Avenue, NW., Washington, DC 20230. The period of scope consultations is intended to provide the Department with ample opportunity to consider all comments and consult with parties prior to the issuance of the preliminary determinations.

Determination of Industry Support for the Petition

Section 732(b)(1) of the Act requires that a petition be filed on behalf of the domestic industry. Section 732(c)(4)(A) of the Act provides that a petition meets this requirement if the domestic producers or workers who support the petition account for: (1) at least 25 percent of the total production of the domestic like product, and (2) more than 50 percent of the production of the domestic like product produced by that portion of the industry expressing support for, or opposition to, the petition.

Section 771(4)(A) of the Act defines the ''industry'' as the producers as a whole of a domestic like product.

Thus, to determine whether the petition has the requisite industry support, the statute directs the Department to look to producers who produce the domestic like product. The International Trade Commission (''ITC''), which is responsible for determining whether ''the domestic industry'' has been injured, must also determine what constitutes a domestic like product in order to define the industry. While the Department and the ITC must apply the same statutory definition regarding the domestic like product (*see* section 771(10) of the Act), they do so for different purposes and pursuant to separate and distinct authority. In addition, the Department's determination is subject to limitations of time and information. Although this may result in different definitions of the domestic like product, such differences do not render the decision of either agency contrary to law.[2]

Section 771(10) of the Act defines the domestic like product as ''a product which is like, or in the absence of like, most similar in characteristics and uses with, the article subject to an investigation under this subtitle.'' Thus, the reference point from which the domestic like product analysis begins is ''the article subject to an investigation,'' *i.e.*, the class or kind of merchandise to be investigated, which normally will be the scope as defined in the petition.

In this case, the domestic like product referred to in the petition is the single domestic like product defined in the ''Scope of Investigation'' section, above. At this time, the Department has no basis on the record to find the petition's definition of the domestic like product to be inaccurate. The Department, therefore, has adopted the domestic like product definition set forth in the petition.

Moreover, the Department has determined that the petition contains adequate evidence of industry support; therefore, polling was unnecessary. *See Import Administration AD Investigation of Saccharin from the PRC: Initiation Checklist,* (July 31, 2002) (''*Initiation Checklist*''), at Attachment II (public version on file in the Central Records Unit of the Department of Commerce, Room B–099). To the best of the Department's knowledge, the Petitioner supporting the petition represents over 50 percent of total production of the domestic like product. Additionally, no person who would qualify as an interested party pursuant to section 771(9) (C), (D), (E), (F), or (G) of the Act has expressed opposition to the petition.

Accordingly, the Department determines that this petition is filed on behalf of the domestic industry within the meaning of section 732(b)(1) of the Act.

Export Price and Normal Value

The following is a description of the allegation of sales at less than fair value (''LTFV'') upon which the Department based its decision to initiate this investigation. The sources of data for the deductions and adjustments relating to U.S. price and factors of production are also discussed in the *Initiation Checklist.* Should the need arise to use any of this information as facts available under section 776 of the Act in our preliminary or final determination, we may reexamine the information and revise the margin calculations, if appropriate. The anticipated period of investigation (''POI'') is January 1, 2002 through June 30, 2002.

The Petitioner identified five PRC companies as producers and exporters of saccharin in the PRC. *See Initiation Checklist* at Attachment I.

The Petitioner submitted an LTFV analysis for the PRC as a non-market economy (''NME''). The Petitioner provided a dumping margin calculation using the Department's NME methodology as required by 19 C.F.R. § 351.202(b)(7)(i)(C).

Export Price

Petitioner calculated a range of export prices using average unit values (AUVs) of saccharin imports reported by the U.S. Census Bureau and the price quotes it obtained, subtracting ocean freight, insurance, brokerage and handling charges and foreign inland freight, where appropriate. *See* Petition at Exhibit 6; and Letter from Petitioner to the Department: Response to Petition Clarifications Questions (July 26, 2002) (''*Petition Clarifications*'') at Exhibits 1 and 2, for a detailed calculation of these export prices. Petitioner did not calculate imputed credit expenses for PRC sales because the petition bases normal value (''NV'') on a factors of production analysis pursuant to section 773(c) of the Act. *See Initiation Checklist* for further information.

Petitioner argues that, because at least one PRC producer of saccharin sells to an affiliated reseller in the United States, some sales during the period of investigation (''POI'') should be considered constructed export price (''CEP'') sales.[3] *See Initiation Checklist.*

[1] *See Harmonized Tariff Schedule of the United States* (2002) (Rev. 3), Chapter 29, Section VI at 29-60.

[2] *See Algoma Steel Corp. Ltd., v. United States*, 688 F. Supp. 639, 642-44 (CIT 1988); *High Information Content Flat Panel Displays and Display Glass from Japan: Final Determination; Rescission of Investigation and Partial Dismissal of Petition*, 56 FR 32376, 32380-81 (July 16, 1991).

[3] Petitioner alleges that Suzhou maintains an affiliated reseller, Suzhou-Chem USA, Inc., which is located at 17 Appleby Rd., Suite B1 Wellesley, MA 02482.

Normal Value

For the normal value (''NV'') calculation, Petitioner based the factors of production, as defined by section 773(c)(3) of the Act (raw materials, labor and energy), for saccharin on information from PRC producers. *See Initiation Checklist*.

The Petitioner selected India as the surrogate country for purposes of valuing the factors of production. The Petitioner argued that, pursuant to section 773(c)(4) of the Act, India is an appropriate surrogate because it is a market-economy country that is at a comparable level of economic development to the PRC and is a significant producer of comparable merchandise. Based on the information provided by the Petitioner, we believe that the Petitioner's use of India as a surrogate country is appropriate for purposes of initiation of this investigation. *See Initiation Checklist.*

In accordance with section 773(c)(4) of the Act, the Petitioner valued factors of production, where possible, on reasonably available, public, surrogate country data. To value certain raw materials, the Petitioner used various sources including import statistics from India, the periodical *Chemical Weekly*, and U.S. Census data. *See Initiation Checklist*. Where Indian import statistics were used, the Department recalculated the data to exclude NME countries and countries determined to provide non-industry specific export subsidies. *See Final Determination of Sales at Less Than Fair Value: Certain Automotive Replacement Glass Windshields from the People's Republic of China,* 67 FR 6482 (February 12, 2002) and accompanying *Issues and Decision Memorandum*. For inputs valued in Indian Rupees and not contemporaneous with the POI, the Petitioner used information from the wholesale price indices (''WPI'') in India, as published by the International Monetary Fund, to determine the inflation adjustment.

The Petitioner explained that, as a result of the saccharin production process, certain byproducts are created that can in turn be sold by the producer to offset the cost of production. Petitioner calculated the quantity of byproducts released per pound of saccharin production, and identified Indian prices to value sales of these byproducts. The quantity of byproduct was then multiplied by the Indian price to determine the total amount of byproduct offset, and subtracted this amount from the total variable cost of producing saccharin. *See Initiation Checklist*.

To value electricity, Petitioner obtained industrial electricity costs in India from the 2000–2001 annual report of National Peroxide Limited (''National Peroxide''), a publicly traded Indian chemical producer. Petitioner maintains that this information is appropriate for use as a surrogate value because it accurately reflects the cost associated with an Indian chemical company's purchases of electricity and is the most contemporaneous pricing data available to Petitioner. *See Initiation Checklist*.

To value coal, Petitioner obtained coal costs in India based on the 1999–2000 financial statement of Hindustan Lever Limited (''Hindustan''), a publicly traded Indian chemical producer. This represents the most contemporaneous information available to Petitioner because National Peroxide's more recent annual report does not contain data regarding purchases of coal. *See Initiation Checklist*.

Pursuant to 19 C.F.R. §351.408(c)(3), the Department calculates and publishes the surrogate values for labor to be used in non-market economy cases. The Petitioner applied the regression formula published on the Department's website to derive the PRC labor rate that would be calculated using the Department's methodology. *See Initiation Checklist*.

For factory overhead (''overhead''), selling, general, and administrative expenses (''SG&A''), and profit, Petitioner states that its research indicated that several companies currently produce saccharin in India. However, to the best of Petitioner's knowledge, all of these companies are privately owned. Consequently, financial statements for an Indian producer of saccharin were not reasonably available to Petitioner. Overhead was, therefore, calculated based on the most recent financial statements of two Indian chemical producers: Calibre Chemicals Pvt. Limited (''Calibre'') and National Peroxide. Petitioner states that data from the 2000 annual report of Calibre was used by the Department in its recent preliminary and final results of the annual administrative review of *Persulfates from the PRC*, and that the 2000–2001 annual report for National Peroxide has been placed on the record of the current annual review of the dumping order in the same case. The overhead, SG&A, and profit ratios for each company were averaged to obtain the respective surrogate values used. *See Initiation Checklist*.

We made adjustments to NV for packing materials. For further information, *see* the *Initiation Checklist.*

Based on comparisons of EP and CEP to NV, calculated in accordance with section 773(c) of the Act, the estimated dumping margins for saccharin from the PRC range from 116.64 percent to 355.55 percent.

Fair Value Comparisons

Based on the data provided by the Petitioner, there is reason to believe that imports of saccharin from the PRC are being, or are likely to be, sold in the United States at less than fair value.

Allegations and Evidence of Material Injury and Causation

The petition alleges that the U.S. industry producing the domestic like product is being materially injured, and is threatened with material injury, by reason of the imports of the subject merchandise sold at LTFV. The Petitioner contends that the industry's injured condition is demonstrated by: (1) reduced shipments; (2) reduced market share; (3) reduced prices; (4) declining production and capacity utilization; (5) growing inventories; (6) significant operating losses; and, (7) lost sales.

The Department assessed the allegations and supporting evidence regarding material injury and causation and determined that these allegations are supported by accurate and adequate evidence and meet the statutory requirements for initiation. *See Initiation Checklist* at Attachment IV.

Initiation of Antidumping Investigation

Based upon our examination of the petition on saccharin from the PRC, we find that the petition meets the requirements of section 732 of the Act. Therefore, we are initiating an antidumping duty investigation to determine whether imports of saccharin from the PRC are being, or are likely to be, sold in the United States at LTFV. Unless postponed, we will make our preliminary determination no later than 140 days after the date of this initiation.

Distribution of Copies of the Petition

In accordance with section 732(b)(3)(A) of the Act, a copy of the public version of the petition has been provided to the government representatives of the PRC. We will attempt to provide a copy of the public version of the petition to each exporter named in the petition, as appropriate, pursuant to 19 CFR 351.203(c)(2).

International Trade Commission Notification

We have notified the ITC of our initiation, as required by section 732(d) of the Act.

Preliminary Determination by the ITC

The ITC will preliminarily determine, no later than August 25, 2002, whether there is a reasonable indication that imports of saccharin from the PRC are materially injuring, or threatening material injury to, a U.S. industry. A negative ITC determination will result in this investigation being terminated; otherwise, this investigation will proceed according to statutory and regulatory time limits.

This notice is published pursuant to section 777(i) of the Act.

Dated: July 31, 2002.

Faryar Shirzad,

Assistant Secretary for Import Administration.

[FR Doc. 02–20076 Filed 8–7–02; 8:45 am]

BILLING CODE 3510–DS–S

DEPARTMENT OF COMMERCE

International Trade Administration

[A–351–806]

Silicon Metal From Brazil: Preliminary Results of Antidumping Duty Administrative Review and Notice of Intent To Revoke Order in Part.

AGENCY: Import Administration, International Trade Administration, Department of Commerce.

SUMMARY: In response to requests by Elkem Metals Company and Globe Metallurgical (collectively petitioners), and requests by Companhia Brasileira Carbureto de Calcio (CBCC), Rima Industrial S.A. (Rima) and Companhia Ferroligas Minas Gerais - Minasligas (Minasligas) (collectively respondents), the Department of Commerce (the Department) is conducting an administrative review of the antidumping duty order on silicon metal from Brazil. The period of review (POR) is July 1, 2000 through June 30, 2001.

We preliminarily determine that one respondent sold subject merchandise at less than normal value (NV) during the POR. We also intend, preliminarily, to revoke the order, in part, with respect to Rima, because we find that Rima has met all of the requirements for revocation, as set forth in section 351.222(b) of the Department's regulations. If these preliminary results are adopted in our final results of this administrative review, we will instruct the U.S. Customs Service (Customs Service) to assess antidumping duties based on the difference between the export price (EP) or constructed export price (CEP) and NV. We invite interested parties to comment on the preliminary results. Parties who submit comments in this proceeding should also submit with the argument: (1) a statement of the issue(s), and (2) a brief summary of the argument (not to exceed five pages). Further, we would appreciate it if parties submitting written comments would provide the Department with an additional copy of the public version of any such comments on diskette.

EFFECTIVE DATE: August 8, 2002.

FOR FURTHER INFORMATION CONTACT: Maisha Cryor at (202) 482–5831 or Thomas Futtner at (202) 482–3814, AD/CVD Enforcement, Office IV, Group II, Import Administration, International Trade Administration, U.S. Department of Commerce, 14th Street and Constitution Avenue, N.W., Washington, D.C. 20230.

SUPPLEMENTARY INFORMATION:

The Applicable Statute

Unless otherwise indicated, all citations to the Tariff Act of 1930, as amended (the Act), are references to the provisions effective January 1, 1995, the effective date of the amendments made to the Act by the Uruguay Round Agreements Act (URAA). In addition, unless otherwise indicated, all citations to the Department's regulations are to the regulations at 19 CFR Part 351 (2001).

Background

On July 31, 1991, the Department published in the **Federal Register** the antidumping duty order on silicon metal from Brazil. *See Antidumping Duty Order: Silicon Metal from Brazil* 56 FR 36135 (July 31, 1991). On July 2, 2001, the Department published in the **Federal Register** a notice of opportunity to request an administrative review of the antidumping duty order on silicon metal from Brazil for the period July 1, 2000, through June 30, 2001. *See Antidumping or Countervailing Duty Order, Finding, or Suspended Investigation; Opportunity To Request Administrative Review*, 66 FR 34910 (July 2, 2001). On July 13, 2001, CBCC requested that the Department conduct an administrative review of its sales. On July 13, 2001, Minasligas requested that the Department conduct an administrative review of its sales and partially revoke the order with respect to Minasligas pursuant to 19 CFR 351.222. On July 31, 2001, Rima requested that the Department conduct an administrative review of its sales and partially revoke the order with respect to Rima pursuant to 19 CFR 351.222.

On July 31, 2001, petitioners requested that the Department conduct an administrative review of sales made by CBCC, Minasligas and Rima. On August 20, 2001, in accordance with 19 CFR 351.221(c)(1)(i), the Department published in the **Federal Register** a notice of initiation of this antidumping duty administrative review. *See Initiation of Antidumping and Countervailing Duty Administrative Reviews and Requests for Revocation in Part*, 66 FR 43570 (August 20, 2001). On September 5, 2001, the Department issued questionnaires to CBCC, Minasligas and Rima.[1]

On October 19, 2001, the Department received responses to sections A through D of the questionnaire from Minasligas. On October 22, 2001, the Department received responses to sections A through C of the questionnaire from Rima. On November 5, 2001, the Department received responses to sections A through D of the questionnaire from CBCC. On February 22, 2002, the Department initiated a cost investigation with respect to Rima. On March 5, 2002, the Department informed Rima that it was required to respond to section D of the Department's questionnaire. On March 22, 2002, the Department received a response to section D of the questionnaire from Rima.

The Department issued supplemental questionnaires to Minasligas on March 29, 2002, April 12, 2002, and June 7, 2002, and received responses on April 24, 2002, and June 21, 2002. The Department issued supplemental questionnaires to CBCC on March 29, 2002, and May 24, 2002, and received responses on April 19, 2002 and June 12, 2002. The Department issued supplemental questionnaires to Rima on April 12, 2002, May 15, 2002 and May 17, 2002 and received responses on May 3, 2002, and May 31, 2002.

On March 15, 2002, in accordance with section 751(a)(3)(A) of the Act, the

[1] Section A of the questionnaire requests general information concerning a company's corporate structure and business practices, the merchandise under investigation that it sells, and the manner in which it sells that merchandise in all of its markets. Section B requests a complete listing of all home market sales, or, if the home market is not viable, of sales in the most appropriate third-country market (this section is not applicable to respondents in non-market economy (NME) cases). Section C requests a complete listing of U.S. sales. Section D requests information on the cost of production (COP) of the foreign like product and the constructed value (CV) of the merchandise under investigation. Section E requests information on further manufacturing.

Department published in the **Federal Register** its notice extending the deadline for the preliminary results until July 31, 2002. *See Silicon Metal from Brazil: Extension of Time Limit for Preliminary Results of Antidumping Duty Administrative Review*, 67 FR 11674 (March 15, 2002). The Department is conducting this review in accordance with section 751 of the Act.

Scope of Review

The merchandise covered by this administrative review is silicon metal from Brazil containing at least 96.00 percent but less than 99.99 percent silicon by weight. Also covered by this administrative review is silicon metal from Brazil containing between 89.00 and 96.00 percent silicon by weight but which contains more aluminum than the silicon metal containing at least 96.00 percent but less than 99.99 percent silicon by weight. Silicon metal is currently provided for under subheadings 2804.69.10 and 2804.69.50 of the Harmonized Tariff Schedule (HTS) as a chemical product, but is commonly referred to as a metal. Semiconductor grade silicon (silicon metal containing by weight not less than 99.99 percent silicon and provided for in subheading 2804.61.00 of the HTS) is not subject to the order. Although the HTS item numbers are provided for convenience and for Customs purposes, the written description remains dispositive.

Fair Value Comparisons

During the POR, Brazilian respondents made both EP and CEP sales to the United States. To determine whether EP sales of silicon metal by the Brazilian respondents to the United States were made at less than NV, we compared EP to the NV, as described in the *Export Price* and *Normal Value* sections of this notice. To determine whether CEP sales of silicon metal by the Brazilian respondents to the United States were made at less than NV, we compared CEP to the NV, as described in the *Constructed Export Price* and *Normal Value* sections of this notice. In accordance with section 777A(d)(2) of the Act, we calculated monthly weighted-average prices for NV and compared these to individual EP or CEP transactions, as appropriate.

Product Comparisons

In accordance with section 771(16) of the Act, we considered all products produced by the respondents, covered by the description in the ''*Scope of Review*'' section, above, to be foreign like products for purposes of determining appropriate product comparisons to U.S. sales. Further, as in the preceding segment of this proceeding, we have continued to treat all silicon metal meeting the description of the merchandise under the ''*Scope of Review*'' section, above (with the exception of slag and contaminated products) as identical products for purposes of model-matching. *See Silicon Metal From Brazil: Preliminary Results, Intent To Revoke in Part, Partial Rescission of Antidumping Duty Administrative Review, and Extension of Time Limits*, 64 FR 43161 (August 9, 1999). Therefore, where there were no contemporaneous sales of identical merchandise in the home market made in the ordinary course of trade to compare to U.S. sales, we compared U.S. sales to the CV of the product sold in the U.S. market during the comparison period, consistent with section 351.405 of the Department's regulations.

Verification

As provided in section 782(i) of the Act, we conducted verifications of the information provided by Rima and CBCC. We used standard verification procedures including examination of relevant sales and financial records, and selection of relevant source documentation as exhibits. Our verification findings are detailed and on file in the Central Records Unit, Room B099 of the Main Commerce building (CRU--Public File).

Revocation

The Department ''may revoke, in whole or in part'' an antidumping duty order upon completion of a review under section 751 of the Act. While Congress has not specified the procedures that the Department must follow in revoking an order, the Department has developed a procedure for revocation that is described in 19 CFR 351.222 (2001). This regulation requires, *inter alia*, that a company requesting revocation must submit the following: (1) a certification that the company has sold the subject merchandise at not less than NV in the current review period and that the company will not sell at less than NV in the future; (2) a certification that the company sold the subject merchandise in commercial quantities in each of the three years forming the basis of the revocation request; and (3) an agreement to reinstatement in the order or suspended investigation, as long as any exporter or producer is subject to the order (or suspended investigation), if the Secretary concludes that the exporter or producer, subsequent to the revocation, sold the subject merchandise at less than NV. *See* 19 CFR 351.222(e)(1). Upon receipt of such a request, the Department will consider the following in determining whether to revoke the order in part: (1) whether the producer or exporter requesting revocation has sold subject merchandise at not less than NV for a period of at least three consecutive years; (2) whether the continued application of the antidumping duty order is otherwise necessary to offset dumping; and (3) whether the producer or exporter requesting revocation in part has agreed in writing to the immediate reinstatement of the order, as long as any exporter or producer is subject to the order, if the Department concludes that the exporter or producer, subsequent to revocation, sold the subject merchandise at less than NV. *See* 19 CFR 351.222(b)(2); *see also Notice of Preliminary Results and Partial Rescission of Antidumping Duty Administrative Review and Intent to Revoke Antidumping Duty Order in Part: Certain Pasta From Italy*, 66 FR 34414, 34420 (June 28, 2001).

I. *Rima*

On July 31, 2001, Rima submitted a request, in accordance with 19 CFR 351.222, that the Department partially revoke the order covering silicon metal from Brazil with respect to its sales of subject merchandise. In accordance with 19 CFR 351.222(e)(1), the request was accompanied by certifications from Rima that, for a consecutive three-year period, including this review period, it sold the subject merchandise in commercial quantities at not less than NV, and would continue to do so in the future. Rima also agreed to its immediate reinstatement in this antidumping order, as long as any firm is subject to the order, if the Department concludes that, subsequent to revocation, Rima sold the subject merchandise at less than NV. We received no comments from petitioners on Rima's request for revocation.

Based on the preliminary results in this review and the final results of the two preceding reviews, Rima has preliminarily demonstrated three consecutive years of sales at not less than NV. Further, in determining whether three years of no dumping establish a sufficient basis to make a revocation determination, the Department must be able to determine that the company continued to participate meaningfully in the U.S. market during each of the three years at issue. *See Certain Corrosion-Resistant Carbon Steel Flat Products and Certain Cut-to-Length Carbon Steel Plate From Canada; Final Results of Antidumping*

Duty Administrative Reviews and Determination To Revoke in Part, 64 FR 2173, 2175 (January 13, 1999); *see also Pure Magnesium From Canada; Final Results of Antidumping Duty Administrative Review and Determination Not to Revoke Order in Part*, 64 FR 12977, 12979 (March 16, 1999); and *Notice of Final Results of Antidumping Duty Administrative Review and Determination Not to Revoke the Antidumping Order: Brass Sheet and Strip from the Netherlands*, 65 FR 742 (January 6, 2000). This practice has been codified in Sec. 351.222(d)(1) of the Department's regulations, which states that, ''before revoking an order or terminating a suspended investigation, the Secretary must be satisfied that, during each of the three (or five) years, there were exports to the United States in commercial quantities of the subject merchandise to which a revocation or termination will apply.'' 19 CFR 351.222(d)(1) (emphasis added); *see also* 19 CFR 351.222(e)(1)(ii). For purposes of revocation, the Department must be able to determine that past margins are reflective of a company's normal commercial activity. Sales during the POR which, in the aggregate, are of an abnormally small quantity do not provide a reasonable basis for determining that the discipline of the order is no longer necessary to offset dumping.

With respect to the threshold matter of whether Rima made sales of subject merchandise to the United States in commercial quantities, we find that Rima's aggregate sales to the United States were made in commercial quantities during the past three consecutive years. The quantity of Rima's shipments of subject merchandise to the United States has remained at a sufficiently high level to be considered as having been made in commercial quantities. Therefore, we can reasonably conclude that the zero and *de minimis* margins calculated for Rima in each of the last three administrative reviews are reflective of the company's normal commercial experience. *See* Memorandum from Maisha Cryor to File, ''Shipments of Silicon Metal to the United States by Rima,'' dated July 31, 2002.

Rima also agreed in writing that it will not sell subject merchandise at less than NV in the future and to the immediate reinstatement of the antidumping order, as long as any exporter or producer is subject to the order, if the Department concludes that, subsequent to the partial revocation, Rima has sold the subject merchandise at less than NV. Thus, in light of the above and pursuant to 19 CFR 351.222, we preliminarily find, for Rima, that the subject merchandise was sold at not less than NV for a period of at least three consecutive years and that dumping is not likely to resume in the future. Consequently, the continuing imposition of an antidumping duty is not necessary to offset dumping.

Therefore, if these preliminary results are affirmed in our final results, we intend to revoke the order in part with respect to merchandise produced and exported by Rima. In accordance with 19 CFR 351.222(f)(3), we will terminate the suspension of liquidation for any such merchandise entered, or withdrawn from warehouse, for consumption on or after the first day after the period under review, and will instruct the Customs Service to refund any cash deposits.

II. *Minasligas*

On July 13, 2001, Minasligas submitted a request, in accordance with 19 CFR 351.222, that the Department partially revoke the order covering silicon metal from Brazil with respect to its sales of subject merchandise. In accordance with 19 CFR 351.222(e)(1), the request was accompanied by certifications from Minasligas that for a consecutive three-year period, including this review period, it sold the subject merchandise in commercial quantities at not less than NV, and would continue to do so in the future. Minasligas also agreed to its immediate reinstatement in this antidumping order, as long as any firm is subject to the order, if the Department concludes that, subsequent to revocation, Minasligas sold the subject merchandise at less than NV.

After a review of the record, the Department preliminarily determines that because Minasligas did not have a zero or *de minimis* dumping margin during the 1999–2000 POR, the preceding review period, it has failed to make sales of subject merchandise ''at not less than NV for a period of at least three consecutive years,'' as required by the Department's regulations. During the 1999–2000 review period, Minasligas' weighted-average dumping margin was determined to be 1.23 percent, *i.e.*, not a *de minimis* rate. *See Silicon Metal from Brazil; Final Results of Antidumping Duty Administrative Review*, 67 FR 6488 (February 12, 2002) (*1999–2000 Silicon Metal*). Therefore, we do not intend to revoke the antidumping duty order with respect to Minasligas. Additionally, because one of the requirements to qualify for revocation has not been met, the Department has not addressed the issues of commercial quantities and whether the continued application of the antidumping duty order is otherwise necessary to offset dumping with respect to Minasligas.

Sales Reviewed

We have continued to employ the approach, adopted in the final results of the second review of this order, covering the 1992–1993 POR, in determining which U.S. sales to review for all companies. If a respondent sold subject merchandise, and the importer of that merchandise had at least one entry during the POR, we reviewed all sales to that importer during the POR. *See Silicon Metal from Brazil, Final Results of Antidumping Duty Administrative Review*, 61 FR 46763 (September 5, 1996).

Level of Trade

In accordance with section 773(a)(1)(B) of the Act, to the extent practicable, we determine NV based on sales in the comparison market at the same level of trade (LOT) as the EP or CEP transaction, as appropriate. The NV LOT is that of the starting-price sales in the comparison market or, when NV is based on CV, that of the sales from which we derive selling, general and administrative (SG&A) expenses and profit. For EP sales, the U.S. LOT is also the level of the starting-price sale, which is usually from the exporter to the importer. For CEP sales, the U.S. LOT is the level of the constructed sale from the exporter to the importer.

To determine whether NV sales are at a different LOT than EP or CEP sales, we examine stages in the marketing process and selling functions along the chain of distribution between the producer and the unaffiliated or affiliated customer. If the comparison-market sales are at a different LOT, and the difference affects price comparability, as manifested in a pattern of consistent price differences between the sales on which NV is based and the comparison market sales at the LOT of the export transaction, we make a LOT adjustment under section 773(a)(7)(A) of the Act. For CEP sales, if the NV level is more remote from the factory than the CEP level and there is no basis for determining whether the difference in the levels between NV and CEP affects price comparability, we adjust NV under section 773(a)(7)(B) of the Act (the CEP offset provision). *See Notice of Final Determination of Sales at Less Than Fair Value: Certain Cut-to-Length Carbon Steel Plate from South Africa*, 62 FR 61731 (November 19, 1997).

In determining whether separate LOTs actually existed in the home and U.S. markets for each respondent, we

examined whether the respondent's sales involved different marketing stages (or their equivalent) based on the channel of distribution, customer categories, and selling functions (or services offered) to each customer or customer category, in both markets.

I. *CBCC*

CBCC reported home market sales through one channel of distribution to three unaffiliated customer categories (*i.e.*, direct sales to traders, original equipment manufacturers and silicon metal producers). CBCC reported both EP and CEP sales in the U.S. market. For EP sales, CBCC reported one customer category and one channel of distribution (i.e., direct sales to unaffiliated trading companies). For CEP sales, CBCC reported one customer category and one channel of distribution (i.e., direct sales to original equipment manufacturers). In its response, CBCC stated that it performs the same type of services for home market customers as it does for its foreign market customers. For this reason, CBCC has not requested a LOT adjustment to NV for comparison to its EP and CEP sales.

Because of the similarity of the selling functions involved in the EP and CEP sales, we found there is only one LOT in the U.S. market. Moreover, in analyzing CBCC's selling activities in both the home and U.S. markets, we determined that essentially the same services were provided for both markets. The selling functions in both markets were minimal in nature and limited to arranging for freight and delivery. Therefore, based upon this information, we have preliminarily determined that for CBCC, the LOT for all U.S. sales is the same as that in the home market. Consequently, because we find the U.S. and home market sales to be at the same LOT, no LOT adjustment under section 773(a)(7) of the Act is warranted for CBCC.

II. *Rima*

Rima reported home market sales through one channel of distribution to one unaffiliated customer category (*i.e.*, direct sales to original equipment manufacturers). In the U.S. market, Rima reported EP sales through one channel of distribution to one unaffiliated customer category (i.e., direct sales to original equipment manufacturers). In its response, Rima stated that it performs the same type of services for home market customers as it does for its foreign market customers. For this reason, Rima has not requested a LOT adjustment.

In analyzing Rima's selling activities for the home and U.S. markets, we determined that essentially the same services were provided for both markets. The selling functions in both markets were minimal in nature and limited to arranging for freight and delivery. Therefore, based upon this information, we have preliminarily determined that for Rima, the LOT for all EP sales is the same as that in the home market. Accordingly, because we find the U.S. sales and home market sales to be at the same LOT, no LOT adjustment under section 773(a)(7)(A) of the Act is warranted for Rima.

III. *Minasligas*

Minasligas reported home market sales through one channel of distribution to two unaffiliated customer categories (*i.e.*, direct sales to domestic retailers and original equipment manufacturers). In the U.S. market, Minasligas reported EP sales through one channel of distribution to one unaffiliated customer category (*i.e.*, direct sales to trading companies). In its response, Minasligas stated that it performs the same type of services for home market customers as it does for its foreign market customers. For this reason, Minasligas has not requested a LOT adjustment.

In analyzing Minasligas' selling activities for the home and U.S. markets, we determined that essentially the same services were provided for both markets. The selling functions in both markets were minimal in nature and limited to arranging for freight and delivery. Therefore, based upon this information, we have preliminarily determined that for Minasligas, the LOT for all EP sales is the same as that in the home market. Accordingly, because we find the U.S. sales and home market sales to be at the same LOT, no LOT adjustment under section 773(a)(7)(A) of the Act is warranted for Minasligas.

Export Price

For Rima, Minasligas and CBCC (where appropriate) we used the Department's EP methodology, in accordance with section 772(a) of the Act, because the respondents sold the subject merchandise to unaffiliated purchasers in the United States prior to importation and because the Department's CEP methodology was not otherwise warranted. CBCC reported sales to unaffiliated trading companies as EP sales in its November 25, 2001, response. However, in a subsequent May 2, 2002, submission, CBCC stated that all of its sales to unaffiliated trading companies were ultimately purchased by Dow Corning Corporation, an affiliate of CBCC. Nevertheless, we have determined that the record evidence in this POR does not establish that at the time of the sales by CBCC to the unaffiliated trading companies, CBCC had or should have had knowledge that this merchandise would ultimately be purchased by Dow. Therefore, for the purposes of these preliminary results, we have continued to treat CBCC's sales to unaffiliated trading companies as EP sales.

We made deductions from the starting price for movement expenses in accordance with section 772(c) of the Act. Movement expenses included, where appropriate, foreign inland freight, brokerage and handling, international freight, insurance, U.S. duties and U.S. warehousing. For Minasligas, in accordance with section 772(c)(1)(B) of the Act, we increased EP by duty drawback. We made company-specific adjustments to reported expenses as follows:

I. *Minasligas*

We recalculated Minasligas' imputed U.S. credit expense using the date of payment by the U.S. customer to the bank as the date of payment. This adjustment is consistent with our past practice concerning the calculation of imputed U.S. credit expense in this proceeding. *See 1999–2000 Silicon Metal*, 67 FR 6488 (February 12, 2002) and accompanying Decision Memorandum at Comment 2. We revised Minasligas' reported duty drawback adjustment. *See* Minasligas' Preliminary Results Calculation Memorandum, dated July 31, 2002.

II. *Rima*

We recalculated Rima's U.S. credit expense using the date of shipment from the factory to the port as the date of shipment. *See* Rima's Preliminary Results Calculation Memorandum, dated July 31, 2002.

Constructed Export Price

In its November 5, 2001, response, CBCC reported sales to its U.S. affiliate, Dow as constructed export price (CEP) sales. CBCC also reported that Dow further manufactured the purchased silicon metal into a multitude of other products, mostly chemicals, and sold these products in the United States. Therefore, CBCC requested that the Department apply section 772(e) of the Act to the further manufactured sales.

Where appropriate, in accordance with section 772(d)(2) of the Act, the Department deducts from CEP the cost of any further manufacture or assembly in the United States, except where the special rule, provided in section 772(e) of the Act, is applied. Section 772(e) of the Act provides that, where the subject

merchandise is imported by an affiliated person and the value added in the United States by the affiliated person is likely to exceed substantially the value of the subject merchandise, the Department has the discretion to determine the CEP using alternative methods.

The alternative methods for establishing constructed export price are: (1) the price of identical subject merchandise sold by the exporter or producer to an unaffiliated person; or (2) the price of other subject merchandise sold by the exporter or producer to an unaffiliated person. The Statement of Administrative Action (SAA) notes the following with respect to these alternatives:

There is no hierarchy between these alternative methods of establishing the export price. If there is not a sufficient quantity of sales under either of these alternatives to provide a reasonable basis for comparison, or if the Department determines that neither of these alternatives is appropriate, it may use any other reasonable method to determine CEP, provided that it supplies the interested parties with a description of the method chosen and an explanation of the basis for its selection. Such a method may be based upon the price paid to the exporter or producer by the affiliated person for the subject merchandise, if the Department determines that such price is appropriate.

To determine whether the value added is likely to exceed substantially the value of the subject merchandise, we estimated the value added based on the difference between the averages of the prices charged to the first unaffiliated purchaser for one form of the merchandise sold in the United States and the averages of the prices paid for the subject merchandise by the affiliated person. *See* 19 C.F.R. 351.402(2). Based on this analysis, and the information on the record, we determined that the estimated value added in the United States by Dow accounted for at least 65 percent of the price charged to the first unaffiliated customer for the merchandise as sold in the United States. Therefore, we determined that the value added is likely to exceed substantially the value of the subject merchandise. As a consequence, the Department has relied upon an alternative methodology to calculate CBCC's margin for these sales. However, we found that there is not a sufficient quantity of sales to unaffiliated parties to use such sales as an alternative method of establishing export price. Therefore, as the alternative methodology, the Department used the price paid to CBCC by Dow. *See Memorandum on Whether to Determine the Constructed Export Price for Certain Further-Manufactured Sales Sold by Companhia Brasileira Carbureto de Calcio in the United States During the Period of Review Under Section 772(e) of the Act (Special Rule Memo*), dated July 31, 2002.

Normal Value

1. Viability

In order to determine whether there was a sufficient volume of sales in the home market to serve as a viable basis for calculating NV (*i.e.*, the aggregate volume of home market sales of the foreign like product is greater than five percent of the aggregate volume of U.S. sales), we compared each respondent's volume of home market sales of the foreign like product to the volume of its U.S. sales of subject merchandise, in accordance with section 773(a)(1) of the Act. Since each respondent's aggregate volume of home market sales of the foreign like product was greater than five percent of its aggregate volume of U.S. sales for the subject merchandise, we determined that the home market provides a viable basis for calculating NV for each respondent. Therefore, pursuant to section 773(a)(1)(B) of the Act, we based NV on home market sales.

2. Cost of Production Analysis

In the review segment of this proceeding that was most recently completed prior to initiating this review, we disregarded home market sales found to be below the cost of production (COP) for CBCC. *See Silicon Metal from Brazil; Preliminary Results of Antidumping Duty Administrative Review and Notice of Intent Not to Revoke Order in Part*, 65 FR 47960, 47966 (August 4, 2000) aff'd *Silicon Metal from Brazil; Final Results of Antidumping Duty Administrative Review and Determination Not To Revoke in Part*, 66 FR 11256 (February 23, 2001) (*1998–1999 Silicon Metal*). Therefore, in accordance with section 773(b)(2)(A)(ii) of the Act, the Department has reasonable grounds to believe or suspect that sales of the foreign like product under consideration for the determination of NV in this review may have been made by CBCC at prices below the COP.

On November 13, 2001, petitioners in this proceeding filed a timely sales-below-cost allegation with respect to Rima. In the case of Rima, petitioners' allegation was based on Rima's antidumping duty questionnaire responses. Upon review of the allegation, we found that petitioners' methodology provided the Department with a reasonable basis to believe or suspect that sales in the home market had been made at prices below the COP by Rima. Accordingly, pursuant to section 773(b)(1) of the Act, we initiated an investigation to determine whether Rima's sales of silicon metal were made at prices below the COP during the POR. *See* Memorandum Regarding the Analysis of Petitioners' Allegation of Sales Below the COP for Rima, dated February 22, 2002.

We did not initiate a cost investigation with respect to Minasligas because its home market sales were not disregarded during the most recently completed segment of this proceeding prior to the initiation of this review (which was the 1998–1999 POR at the time this instant review was initiated) and petitioners did not file a sales-below-cost allegation. *See 1998–1999 Silicon Metal*.

A. Calculation of COP

In accordance with section 773(b)(3) of the Act, we calculated company- and product-specific COPs based on the sum of the respondent's cost of materials and fabrication for the foreign like product, plus amounts for home market SG&A expenses, including interest expenses, and packing costs.

We relied on the COP information submitted by each respondent in its questionnaire responses, except for the following adjustments. For Rima and CBCC, we compared home market prices and COP exclusive of value added taxes (VAT); we did not allow Rima and CBCC to reduce its COP for the amount paid with VAT credits. *See Final Results of Antidumping Duty Administrative Review: Silicon Metal from Brazil*, 65 FR 7497, 7499 (February 15, 2000); *see also Silicon Metal from Brazil: Preliminary Results of Antidumping Duty Administrative Review and Notice of Intent Not To Revoke Order in Part*, 65 FR 47960, 47966 (August 4, 2000). In addition, for Rima, we corrected the calculation of its COP. In its section D questionnaire response, Rima mistakenly doubled the value of its total cost of manufacturing (TOTCOM) prior to including TOTCOM in the calculation of its COP. *See* Rima's Preliminary Results Calculation Memorandum, dated July 31, 2002.

B. Test of Home Market Sales Prices for CBCC and Rima

For CBCC and Rima, we compared the per-unit adjusted weighted-average COP figures for the POR to home market sale prices of the foreign like product, as required under section 773(b) of the Act, in order to determine whether these

sales were made at prices below the COP. On a product-specific basis, we compared the COP to the home market prices, less any applicable movement charges, rebates, and discounts. In determining whether to disregard home market sales made at prices below the COP, we examined whether: (1) within an extended period of time, such sales were made in substantial quantities; and (2) such sales were made at prices which permitted the recovery of all costs within a reasonable period of time.

C. Results of COP Test for CBCC and Rima

Pursuant to section 773(b)(2)(C), where less than 20 percent of a respondent's sales of a given product were at prices below the COP, we did not disregard any below-cost sales of that product because we determined that the below-cost sales were not made in ''substantial quantities.'' Where 20 percent or more of the respondent's sales of a given product during the POR were made at prices below the COP, we determined such sales to have been made in ''substantial quantities'' within an extended period of time in accordance with section 773(b)(2)(B) of the Act. In such cases, because we compared prices to POR-average costs, we also determined that such sales were not made at prices which would permit the recovery of all costs within a reasonable period of time, in accordance with section 773(b)(2)(D) of the Act.

We found that no respondent made comparison-market sales at prices below the COP within an extended period of time in substantial quantities. Therefore, we did not exclude any sales from our analysis in accordance with section 773(b)(1) of the Act.

Price-to-Price Comparisons

For those comparison products for which there were sales at prices above the COP, we based the respondents' NV on the prices at which the foreign like product was first sold to unaffiliated parties for consumption in Brazil, in the usual commercial quantities, in the ordinary course of trade in accordance with section 773(a)(1)(B)(i) of the Act. We based NV on sales at

the same LOT as the U.S. transactions. For LOT analysis, please see the *Level of Trade* section above. In accordance with section 773(a)(6) of the Act, we made adjustments to home market price, where appropriate for inland freight, brokerage and handling charges, and rebates. Where home market prices were reported exclusive of VAT we made no adjustment for this item. However, where home market prices were reported inclusive of VAT, we deducted the VAT from the gross home market price, consistent with past practice. *See Silicon Metal from Brazil: Preliminary Results of Antidumping Administrative Review and Notice of Intent Not to Revoke Order in Part*, 66 FR 40980, 40986 (August 6, 2001; aff'd *1999–2000 Silicon Metal from Brazil*.

Pursuant to section 773(a)(6)(B)(iii) of the Act, we deducted taxes imposed directly on sales of the foreign like product (VAT, PIS, and COFINS taxes), but not collected on the subject merchandise. We note that, in past cases involving Brazil, we have determined that since PIS and COFINS taxes are levied on total revenues, except for export revenues, the taxes are direct taxes (akin to taxes on profits or wages) and, as such, should not be deducted from NV. *See Certain Cut-To-Length Carbon Steel Plate From Brazil: Final Results of Antidumping Duty Administrative Review*, 63 FR 12744, 12746 (March 16, 1998) (*Plate from Brazil*). In *Plate from Brazil*, the Department determined that since these taxes are not indirect taxes, there is no basis on which to deduct them in the calculation of NV, according to section 773(a)(6)(B)(iii) of the Act. Id. However, in a recent countervailing duty preliminary determination regarding *Certain Cold-Rolled Carbon Steel Flat Products from Brazil*, the Department preliminarily concluded that the PIS and COFINS taxes are indirect. *See Notice of Preliminary Affirmative Countervailing Duty Determination and Alignment with Final Antidumping Duty Determinations: Certain Cold-Rolled Carbon Steel Flat Products from Brazil*, 67 FR 9652, 9659 (March 4, 2002).

In reaching this decision, we note that in the *Notice of Preliminary Determination of Sales at Less Than Fair Value and Postponement of Final Determination: Carbon and Certain Alloy Steel Wire Rod From Brazil (Steel Wire Rod from Brazil*), the Department examined the legislation underlying the PIS and COFINS in order to determine how Brazil assesses these taxes. 67 FR 18586, 18590 (April 16, 2002). In *Steel Wire Rod from Brazil* the Department found the following:

Article 2 of the COFINS legislation states that ''corporate bodies'' will contribute two percent, ''charged against monthly billings, that is, gross revenue derived from the sale of goods and services of any nature.'' Likewise, Article ''Second'' of the PIS tax law (also found in the PIS and COFINS legislation) provides similar language stating that this tax contribution will be calculated ''on the basis of the invoicing.'' The PIS legislation further defines invoicing under Article ''Third'' to be the gross revenue ''originating from the sale of goods.'' *Id*.

Section 351.102(b) of the Department's regulations defines an indirect tax as a ''sales, excise, turnover, value added, franchise, stamp, transfer, inventory, or equipment tax, border tax, or any other tax other than a direct tax or an import charge.'' As noted above in the discussion of the PIS and COFINS legislation, these taxes are derived from the ''monthly invoicing'' or ''invoicing'' originating from the sale of goods and services. Therefore, we preliminarily find that the manner in which these taxes are assessed is characteristic of an indirect tax, which is directly imposed on sales of the foreign like product and should be subtracted from NV.

To account for differences in circumstances of sale between the home market and the United States, where appropriate, we adjusted home market prices by deducting home market direct selling expenses (including credit) and adding an amount for late payment fees earned on home market sales, where appropriate. Specifically, for Minasligas, we recalculated Minasligas' home market imputed credit expense using a surrogate interest rate and the period of time between the date of shipment and the date of payment. Regarding Minasligas' reported interest rate, Minasligas did not demonstrate that it incurred short-term borrowings during the POR at the rate it reported in its questionnaire response. Therefore, as in the most recently completed segment of this proceeding, we have denied Minasligas reported credit expense and have used the Special Clearance and Custody System (SELIC), as the surrogate interest rate to calculate the expense. *See 1999–2000 Silicon Metal from Brazil*, 67 FR 6488 (February 12, 2002) and accompanying Decision Memorandum at Comment 1. *See also* Minasligas' Preliminary Results Calculation Memorandum, dated July 31, 2002.

Specifically, for CBCC, we recalculated CBCC's home market imputed credit expense using a surrogate interest rate. We reviewed documentation at verification pertaining to CBCC's short-term borrowing activity during the POR and found the activity to be outside the ''normal course of trade.'' In particular, at the verification of CBCC, conducted June 13, 2002, through June 14, 2002, CBCC characterized its own short-term borrowing activity during this POR as rare. *See* CBCC's Verification Report, dated July 15, 2002. We therefore determine that CBCC's short-term borrowing during this POR, was not in

the ''normal course of trade.'' Consequently, as in the most recently completed segment of this proceeding, we have denied CBCC's reported credit expense and have used the SELIC rate to calculate the expense. *See Silicon Metal 1999–2000*, 67 FR 6488 (February 12, 2002) and accompanying Decision Memorandum at Comment 18.

In order to adjust for differences in packing between the two markets, we deducted HM packing costs and added U.S. packing costs, where appropriate, in accordance with sections 773(a)(6)(A) and (B) of the Act.

Currency Conversions

We made currency conversions in accordance with section 773A of the Act based on the exchange rates in effect on the dates of the U.S. sales as certified by the Federal Reserve Bank.

Preliminary Results of Review

As a result of our review, we preliminarily determine that the following weighted-average dumping margins exist for the period July 1, 2000 through June 30, 2001, and we preliminarily determine not to revoke the order covering silicon metal from Brazil with respect to sales of subject merchandise by Minasligas. However, we do preliminarily determine to revoke the order covering silicon metal from Brazil with respect to sales of subject merchandise by Rima.

Manufacturer/exporter	Weighted-average Margin Percentage
CBCC	0.00
Minasligas	4.30
Rima	0.00

Pursuant to 19 CFR 351.224(b), the Department will disclose to parties to the proceeding any calculations performed in connection with these preliminary results within 5 days of the date of publication of this notice. Any interested party may request a hearing within 30 days of the date of publication of this notice. Parties who submit arguments in this proceeding are requested to submit with each argument: (1) a statement of the issue and (2) a brief summary of the argument. Further, we would appreciate it if parties submitting written comments would provide the Department with an additional copy of the public version of any such comments on diskette. All case briefs must be submitted within 30 days of the date of publication of this notice. Rebuttal briefs, which are limited to issues raised in the case briefs, may be filed not later than seven days after the case briefs are filed. A hearing, if requested, will be held two days after the date the rebuttal briefs are filed or the first business day thereafter.

The Department will publish a notice of the final results of this administrative review, which will include the results of its analysis of the issues raised in any written comments or at the hearing, within 120 days from the publication of these preliminary results.

The Department shall determine, and Customs shall assess, antidumping duties on all appropriate entries. Upon completion of this review, the Department will issue appraisement instructions directly to Customs. The final results of this review shall be the basis for the assessment of antidumping duties on entries of merchandise covered by the determination and for future deposits of estimated duties. For duty assessment purposes, we calculated a per-unit customer or importer-specific assessment rate by aggregating the dumping margins calculated for all U.S. sales to each customer/importer and dividing this amount by the total quantity of those sales. Where the assessment rate is above *de minimis*, we will instruct the U.S. Customs Service to assess duties on all entries of subject merchandise by that importer.

Furthermore, the following deposit requirements will be effective for all shipments of silicon metal from Brazil entered, or withdrawn from warehouse, for consumption on or after the publication date of the final results of this administrative review, as provided by section 751(a)(1) of the Act: (1) the cash deposit rates for the reviewed companies will be those established in the final results of this review except if the rate is less than 0.5 percent, and therefore, *de minimis*, the cash deposit rate will be zero; (2) for previously reviewed or investigated companies not listed above, the cash deposit rate will continue to be the company-specific rate published for the most recent period; (3) if the exporter is not a firm covered in this review, a prior review, or the original LTFV investigation, but the manufacturer is, the cash deposit rate will be the rate established for the most recent period for the manufacturer of the merchandise; and (4) for all other manufacturers and/or exporters of this merchandise, the cash deposit rate will continue to be 91.06 percent, the ''all others'' rate established in the LTFV investigation. These requirements, when imposed, shall remain in effect until publication of the final results of the next administrative review.

This notice serves as a preliminary reminder to importers of their responsibility under 19 CFR 351.402(f) of the Department's regulations to file a certificate regarding the reimbursement of antidumping duties prior to liquidation of the relevant entries during this review period. Failure to comply with this requirement could result in the Secretary's presumption that reimbursement of antidumping duties occurred and the subsequent assessment of double antidumping duties.

This administrative review and notice are issued and published in accordance with sections 751(a)(1) and 777(i)(1) of the Act and 19 CFR 351.221.

Dated: July 31, 2002.

Faryar Shirzad,

Assistant Secretary for Import Administration.

[FR Doc. 02–20077 Filed 8–7–02; 8:45 am]

BILLING CODE 3510–DS–S

DEPARTMENT OF COMMERCE

International Trade Administration

Associated Universities, Inc.; Notice of Decision on Application for Duty-Free Entry of Scientific Instrument

This decision is made pursuant to section 6(c) of the Educational, Scientific, and Cultural Materials Importation Act of 1966 (Pub. L. 89–651, 80 Stat. 897; 15 CFR part 301). Related records can be viewed between 8:30 a.m. and 5 p.m. in Suite 4100W, U.S. Department of Commerce, Franklin Court Building, 1099 14th Street, NW, Washington, DC.

Docket Number: 02–016. *Applicant:* Associated Universities, Inc., National Radio Astronomy Observatory, Charlottesville, VA 22903. *Instrument:* Atacama Large Millimeter Array (ALMA) Radio Telescope. *Manufacturer:* Vertex Antennentechnik GmbH, Germany. *Intended Use: See* notice at 67 FR 35961, May 22, 2002.

Comments: None received. Decision: Approved. No instrument of equivalent scientific value to the foreign instrument, for such purposes as it is intended to be used, is being manufactured in the United States. Reasons: The foreign instrument provides: (1) Extremely high surface precision (25.0 μm) and pointing accuracy (0.6 arcseconds), (2) a structure immune to changes in temperature, (3) high speed motion and (4) operation from 30–950 GHz. The Harvard-Smithsonian Center for Astrophysics advised July 30, 2002 that (1) these capabilities are pertinent to the applicant's intended purpose and (2) it knows of no domestic instrument or

apparatus of equivalent scientific value to the foreign instrument for the applicant's intended use.

We know of no other instrument or apparatus of equivalent scientific value to the foreign instrument which is being manufactured in the United States.

Gerald A. Zerdy,

Program Manager, Statutory Import Programs Staff.

[FR Doc. 02–20078 Filed 8–7–02; 8:45 am]

BILLING CODE 3510–DS–P

DEPARTMENT OF COMMERCE

International Trade Administration

University of Vermont; Notice of Decision on Application for Duty-Free Entry of Scientific Instrument

This decision is made pursuant to section 6(c) of the Educational, Scientific, and Cultural Materials Importation Act of 1966 (Pub. L. 89–651, 80 Stat. 897; 15 CFR part 301). Related records can be viewed between 8:30 a.m. and 5 p.m. in Suite 4100W, U.S. Department of Commerce, Franklin Court Building, 1099 14th Street, NW, Washington, DC.

Docket Number: 02–012R. *Applicant:* University of Vermont, Burlington, VT 05405. *Instrument:* Slow Scan CCD Camera System, Model TemCam–0124. *Manufacturer:* Tietz Video and Image Processing Systems GmbH, Germany. *Intended Use: See* notice at 67 FR 34903, May 16, 2002.

Comments: None received. Decision: Approved. No instrument of equivalent scientific value to the foreign instrument, for such purposes as it is intended to be used, is being manufactured in the United States. Reasons: The foreign instrument provides: (1) Superior resolution by matching the surface of the fiber optic coupling to the shape of the CCD chip surface, permitting determination of the quality of cryo samples needed to assess areas suitable for tomography and (2) accommodation for a high resolution CRT screen. The National Institutes of Health advises in its memorandum of July 16, 2002 that (1) these capabilities are pertinent to the applicant's intended purpose and (2) it knows of no domestic instrument or apparatus of equivalent scientific value to the foreign instrument for the applicant's intended use.

We know of no other instrument or apparatus of equivalent scientific value to the foreign instrument which is being manufactured in the United States.

Gerald A. Zerdy,

Program Manager, Statutory Import Programs Staff.

[FR Doc. 02–20079 Filed 8–7–02; 8:45 am]

BILLING CODE 3510–DS–P

DEPARTMENT OF COMMERCE

National Institute of Standards and Technology

[Docket No.: 020724177–2177–01]

Notice of Intent To Update Infrared Spectral Library

AGENCY: National Institute of Standards and Technology, Commerce.

ACTION: Notice and request for comments.

SUMMARY: The National Institute of Standards and Technology announces its intent to add condensed phase infrared spectra to its current library of gas phase infrared spectra. The update will include approximately 10,000 spectra of diverse compounds digitized from the published spectra of the Coblentz Society. Interested parties are invited to submit comments to the address below.

DATES: Comments must be received by September 9, 2002.

ADDRESSES: Comments should be sent to the attention of Dr. Stephen Stein at the National Institute of Standards and Technology, Mail Stop 8380, 100 Bureau Drive, Gaithersburg, MD 20899–8380.

FOR FURTHER INFORMATION CONTACT: Dr. Stephen Stein by writing to the above address or by e-mail at *stephen.stein@nist.gov* or by telephone at (301) 975–2444.

SUPPLEMENTARY INFORMATION: As part of its responsibilities under Title 15 U.S.C. 290 to collect, evaluate and publish high quality Standard Reference Data (SRD), NIST creates and maintains evaluated SRD databases. NIST currently distributes a gas phase infrared library containing spectra for approximately 6,000 discrete chemical substances. The database is primarily used to aid in the application of infrared spectroscopy to chemical analysis and to assist in identification of chemical compounds by providing a source for reference spectra for comparison to spectra acquired by instruments. For each spectrum, auxiliary information for chemical identification is provided, including chemical names, formulas, chemical structures and related information. The planned update will add approximately 10,000 spectra for compounds primarily in the condensed phase which have been digitized (vectorized) from existing hard copy versions of the spectra. They will also contain the auxiliary information described above. These spectra, which have been published by the Coblentz Society, have been highly evaluated and have long been widely available in reference books. The new spectra add coverage of compounds in the condensed phase to current NIST collections and also enable the use of this spectral information by digital data systems. We invite comments concerning this update.

Dated: August 1, 2002.

Karen H. Brown,

Deputy Director.

[FR Doc. 02–20101 Filed 8–7–02; 8:45 am]

BILLING CODE 3510–13–P

DEPARTMENT OF COMMERCE

National Institute of Standards and Technology

Notice of Inventions Available for Licensing

AGENCY: National Institute of Standards and Technology, Commerce.

ACTION: Notice of inventions available for licensing.

SUMMARY: The inventions listed below are owned in whole or in part by the U.S. Government, as represented by the Department of Commerce. The Department of Commerce's interest in the inventions is available for licensing in accordance with 35 U.S.C. 207 and 37 CFR part 404 to achieve expeditious commercialization of results of federally funded research and development.

FOR FURTHER INFORMATION CONTACT: Technical and licensing information on these inventions may be obtained by writing to: National Institute of Standards and Technology, Office of Technology Partnerships, Attn: Mary Clague, Building 820, Room 213, Gaithersburg, MD 20899. Information is also available via telephone: 301–975–4188, e-mail: *mclague@nist.gov,* or fax: 301–869–2751. Any request for information should include the NIST Docket number and title for the relevant invention as indicated below.

SUPPLEMENTARY INFORMATION: NIST may enter into a Cooperative Research and Development Agreement (''CRADA'') with the licensee to perform further research on the inventions for purposes of commercialization. The inventions available for licensing are:

[Docket No.: 97–026US]

Title: Method and apparatus for diffraction measurement using a scanning x-ray source.

Abstract: The invention is jointly owned by the U.S. Government, as represented by the Secretary of Commerce, and Digiray Corporation. This invention is available for non-exclusive licensing. The present invention relates to x-ray diffraction measurement by using moving x-ray source x-ray diffraction. The invention comprises a raster-scanned x-ray source, a specimen, a collimator, and a detector. The x-ray source is electronically scanned which allows a complete image of the x-ray diffraction characteristics of the specimen to be produced. The specimen is placed remote from the x-ray source and the detector. The collimator is located directly in front of the detector. The x-rays are diffracted by the specimen at certain angles, which cause them to travel through the collimator and to the detector. The detector may be placed in any radial location relative to the specimen in order to take the necessary measurements. The detector can detect the intensity and/or the wavelength of the diffracted x-rays. All information needed to solve the Bragg equation as well as the Laue equations is available. The x-ray source may be scanned electronically or mechanically. The present invention is used to perform texture analysis and phase identification.

[Docket No.: 99–021D]

Title: Apparatus and method for refreshable tactile display.

Abstract: The invention is owned by the U.S. government, as represented by the Secretary of Commerce. This invention is available for exclusive or non-exclusive licensing. The invention utilizes a rotating-wheel and is designed to be mechanically simpler than existing refreshable tactile display devices, while providing much of their functionality as well as additional features. It is believed that this design will allow for greatly lowered cost and improved reliability in comparison to existing systems.

Dated: August 1, 2002.

Karen H. Brown,

Deputy Director.

[FR Doc. 02–20100 Filed 8–7–02; 8:45 am]

BILLING CODE 3510–13–P

DEPARTMENT OF COMMERCE

National Oceanic and Atmospheric Administration

[I.D. 080102D]

Environmental Impact Statement; Public Scoping; Endangered and Threatened Species

AGENCY: National Marine Fisheries Service (NMFS), National Oceanic and Atmospheric Administration (NOAA), Commerce.

ACTION: Notice of intent to conduct public scoping and prepare an Environmental Impact Statement (EIS).

SUMMARY: Pursuant to the National Environmental Policy Act (NEPA), NMFS intends to gather the information necessary to prepare an EIS on a determination pursuant to the Endangered Species Act (ESA) related to a resource management plan (RMP) for harvest of Puget Sound chinook populations. NMFS is furnishing this notification to: advise other agencies and the public of its intent, and to obtain suggestions and information on the scope of issues to include in the EIS, specifically to assist NMFS in identifying the range of alternatives to include in the EIS analysis. In addition, NMFS will hold a scoping meeting (see **ADDRESSES**) to provide for public input into the range of alternatives and issues that the EIS should consider. NMFS is accepting written comments on the range of alternatives and issues it should consider for this EIS.

DATES: Written comments from all interested parties must be received at the appropriate address or fax number (see **ADDRESSES**), no later than 5 p.m. Pacific Standard Time on September 9, 2002. Written comments will also be accepted at a public scoping meeting held from 6:30-8:30 p.m., August 22, 2002, in Building 9 of the National Oceanic and Atmospheric Administration facility at Sand Point, 7600 Sand Point Way NE, Seattle, Washington. Each attendee will be asked for his/her photo identification and the reason for his/her visit by NMFS security at the facility entrance.

ADDRESSES: Comments and requests to be included on a mailing list of persons interested in the EIS should be sent to Susan Bishop, Puget Sound and Washington Coastal Harvest Management Team Leader, Sustainable Fisheries Division, National Marine Fisheries Service, 7600 Sand Point Way NE, Seattle, WA 98115–0070; telephone 206/526–4587; facsimile (fax) 206/526–6736. Comments will not be accepted if submitted via e-mail or the Internet.

As reference material, the RMP implemented in April 2001 under the ESA 4(d) Rule Limit 6, *Puget Sound Comprehensive Chinook Management Plan: Harvest Management Component*, is available on the Internet at *http://www.nwifc.wa.gov/recovery/*. NMFS's evaluation and determination on the 2001 RMP is available at *http://www.nwr.noaa.gov/1sustfish/limit6/rmpfinal.htm* .

FOR FURTHER INFORMATION CONTACT: Susan Bishop, NMFS, Northwest Region, 206/526–4587, or e-mail: *susan.bishop@noaa.gov*.

SUPPLEMENTARY INFORMATION:

Background

The Puget Sound chinook Evolutionarily Significant Unit (ESU) was listed as threatened under the ESA in March 1999 (64 FR 14308). The ESU encompasses all naturally spawned spring-, summer-, and fall-runs of chinook salmon in the Puget Sound region from the North Fork Nooksack River to the Elwha River on the Olympic Peninsula. This ESU is located in portions of Clallam, Island, King, Kitsap, Jefferson, Mason, Pierce, San Juan, Skagit, Snohomish, and Whatcom Counties in Washington state. Puget Sound chinook have a complex life history, migrating from their natal streams throughout Puget Sound to the Pacific Ocean where they generally spend 1 to 3 years before returning to their natal streams, primarily as 3 and 4 year old adults. In their ocean migration, they travel north along the west coast into Canadian, and at times as far north as Alaskan, waters. In doing so, they are caught in a broad range of fisheries which are managed by an array of agencies, bodies and governments including the U.S. Department of Commerce, States of Washington, Oregon, and Alaska, over 20 Native American tribal jurisdictions, the North Pacific Fisheries Management Council, the Pacific Fisheries Management Council, and the Pacific Salmon Commission.

Since the listing, NMFS has evaluated the impact of some fisheries affecting listed Puget Sound chinook in compliance with section 7 of the ESA and also evaluated the 2001 RMP for Puget Sound chinook under the 4(d) Rule Limit 6. The Washington Department of Fish and Wildlife (WDFW) and the Puget Sound Treaty Tribes (co-managers) are jointly developing another RMP intended to take effect when the current RMP expires in April 2003. It will encompass commercial, recreational, ceremonial, and subsistence salmon fisheries

potentially affecting the listed Puget Sound Chinook ESU within the marine and freshwater areas of Puget Sound, from the entrance of the Strait of Juan de Fuca inward, including fisheries under the jurisdiction of the U.S. Fraser Panel. However, as with the current RMP, harvest objectives specified in the RMP will account for fisheries-related mortality of Puget Sound chinook throughout its migratory range from Oregon and Washington to Southeast Alaska. The RMP will also include implementation, monitoring, and evaluation procedures designed to ensure fisheries are consistent with the RMP's objectives. Under the ESA 4(d) Rule Limit 6 NMFS must make a determination that the RMP, as proposed and implemented by the Puget Sound Treaty Tribes and State of Washington, does not appreciably reduce the likelihood of survival and recovery of Puget Sound chinook while providing for fishing opportunities and the exercise of federally protected treaty fishing rights, as implemented and enforced within the continuing jurisdiction of *U.S.* v. *Washington*.

NMFS will conduct an environmental review of the RMP and prepare an EIS. The environmental review will analyze the proposed action, the proposed RMP, as well as a full range of reasonable alternatives and the associated impacts of each. NMFS is currently developing alternatives for analysis. In addition to the No Action Alternative (no authorized take of listed Puget Sound chinook within the Strait of Juan de Fuca and Puget Sound area), the alternatives could include at least the following: (1) a harvest regime based on escapement goal management and (2) an alternative that combines escapement goal management at the individual population level with terminal fisheries.

Authority

The environmental review of this project will be conducted in accordance with requirements of the National Environmental Policy Act of 1969, National Environmental Policy Act Regulations (40 CFR 1500-1508), other appropriate Federal laws and regulations, and policies and procedures of NOAA for compliance with those regulations.

Special Accommodations

Requests for sign language interpretation or other auxiliary aids should be directed to Susan Bishop (206/526–4587, or email: *susan.bishop@noaa.gov*) at least 5 days before the meeting date.

Dated: August 2, 2002.

Susan L. Pultz,

Acting Chief, Endangered Species Division, Office of Protected Resources, National Marine Fisheries Service.

[FR Doc. 02–20092 Filed 8–7–02; 8:45 am]

BILLING CODE 3510–22–S

DEPARTMENT OF EDUCATION

Notice of Proposed Information Collection Requests

AGENCY: Department of Education.

SUMMARY: The Leader, Regulatory Information Management Group, Office of the Chief Information Officer, invites comments on the proposed information collection requests as required by the Paperwork Reduction Act of 1995.

DATES: Interested persons are invited to submit comments on or before October 7, 2002.

SUPPLEMENTARY INFORMATION: Section 3506 of the Paperwork Reduction Act of 1995 (44 U.S.C. Chapter 35) requires that the Office of Management and Budget (OMB) provide interested Federal agencies and the public an early opportunity to comment on information collection requests. OMB may amend or waive the requirement for public consultation to the extent that public participation in the approval process would defeat the purpose of the information collection, violate State or Federal law, or substantially interfere with any agency's ability to perform its statutory obligations. The Leader, Regulatory Information Management Group, Office of the Chief Information Officer, publishes that notice containing proposed information collection requests prior to submission of these requests to OMB. Each proposed information collection, grouped by office, contains the following: (1) Type of review requested, *e.g.* new, revision, extension, existing or reinstatement; (2) Title; (3) Summary of the collection; (4) Description of the need for, and proposed use of, the information; (5) Respondents and frequency of collection; and (6) Reporting and/or Recordkeeping burden. OMB invites public comment. The Department of Education is especially interested in public comment addressing the following issues: (1) is this collection necessary to the proper functions of the Department; (2) will this information be processed and used in a timely manner; (3) is the estimate of burden accurate; (4) how might the Department enhance the quality, utility, and clarity of the information to be collected; and (5) how might the Department minimize the burden of this collection on the respondents, including through the use of information technology.

Dated: August 2, 2002.

John Tressler,

Leader, Regulatory Information Management Office of the Chief Information Officer.

Office of the Undersecretary

Type of Review: New.

Title: Longitudinal Assessment of CSR Implementation and Outcomes (LACIO).

Frequency: Annually.

Affected Public: State, Local, or Tribal Gov't, SEAs or LEAs.

Reporting and Recordkeeping Hour Burden:

Responses: 4,380.

Burden Hours: 2,567.

Abstract: This evaluation assesses the accomplishments of the Comprehensive School Reform (CSR) program in implementing school reform and thereby improving student achievement. The evaluation also makes a preliminary assessment of the conditions influencing the sustainability of reforms once Federal support ends. The evaluation uses a variety of data sources to understand the complex interplay of state policies, school district, educational support, and CSR school conditions affecting CSR implementation and outcomes. The major evaluation questions are: (1) To what extent have CSR-supported schools made gains on state assessments in comparison to gains for schools in the same state with similar characteristics; (2) How effective is CSR support for reform; and (3) How have district policies and state policies affected CSR implementation and comprehensive school reform. A mixed method approach will be used to collect appropriate data for addressing each evaluation question. The methods include mail surveys of 400 CSR-program and 400 non-CSR program schools, telephone surveys of 50 districts and 20 states, and a case study inquiry of 30 ''sites'' to provide data on vertical slices of the CSR program (each ''site'' comprises a CSR school and comparison school, as well as the district, state, and support infrastructure in which the schools operate). Evaluators will be able to link information from these various sources in order to provide policymakers and other stakeholders with coherent findings.

Requests for copies of the proposed information collection request may be accessed from *http://edicsweb.ed.gov*, by selecting the ''Browse Pending Collections'' link and by clicking on link number 2091. When you access the

information collection, click on ''Download Attachments'' to view. Written requests for information should be addressed to Vivian Reese, Department of Education, 400 Maryland Avenue, SW., Room 4050, Regional Office Building 3, Washington, DC 20202–4651 or to the e-mail address *Vivian.Reese@ed.gov*. Requests may also be electronically mailed to the internet address *OCIO_RIMG@ed.gov* or faxed to 202–708–9346. Please specify the complete title of the information collection when making your request.

Comments regarding burden and/or the collection activity requirements should be directed to Jacqueline Montague at (202) 708–5359 or via her e-mail address *Jackie.Montague@ed.gov*. Individuals who use a telecommunications device for the deaf (TDD) may call the Federal Information Relay Service (FIRS) at 1–800–877–8339.

[FR Doc. 02–20035 Filed 8–7–02; 8:45 am]

BILLING CODE 4000–01–P

DEPARTMENT OF EDUCATION

President's Advisory Commission on Educational Excellence for Hispanic Americans

AGENCY: President's Advisory Commission on Educational Excellence for Hispanic Americans, Department of Education.

ACTION: To amend the date of the meeting posted in the 67 FR 140, Monday, July 22, 2002, page 47777.

Date and Time: Monday, August 5, 2002, from 4:30 p.m. to 6 p.m.

ADDRESSES: The Commission meeting will be held in San Diego, California, at the Westgate Hotel located at 1055 Second Avenue, San Diego, CA, 92101

FOR FURTHER INFORMATION CONTACT: Leslie Sanchez, Executive Director, or Adam Chavarria, Associate Director, White House Initiative on Educational Excellence for Hispanic Americans, 400 Maryland Ave., SW., Washington, DC 20202, (202) 401–1411.

Dated: August 2, 2002.

Rod Paige,

Secretary, U.S. Department of Education.

[FR Doc. 02–20027 Filed 8–7–02; 8:45 am]

BILLING CODE 4000–01–M

DEPARTMENT OF ENERGY

[Docket Nos. EA–212–B]

Application To Export Electric Energy; Coral Power, L.L.C.; To Amend Authorization to Transmit Electric Energy to Mexico

AGENCY: Office of Fossil Energy, DOE.

ACTION: Notice of applications.

SUMMARY: Coral Power, L.L.C. (Coral) has applied to amend its authorization to transmit electric energy from the United States to Mexico pursuant to section 202(e) of the Federal Power Act.

DATES: Comments, protests or requests to intervene must be submitted on or before August 23, 2002.

ADDRESS: Comments, protests or requests to intervene should be addressed as follows: Office of Coal & Power Imports/Exports (FE–27), Office of Fossil Energy, U.S. Department of Energy, 1000 Independence Avenue, SW., Washington, DC 20585–0350 (FAX 202–287–5736).

FOR FURTHER INFORMATION CONTACT: Steven Mintz (Program Office) 202–586–9506 or Michael Skinker (Program Attorney) 202–586–2793.

SUPPLEMENTARY INFORMATION: Exports of electricity from the United States to a foreign country are regulated and require authorization under section 202(e) of the Federal Power Act (FPA) (16 U.S.C. 824a(e)).

On June 9, 1999, the Office of Fossil Energy (FE) of the Department of Energy (DOE) authorized Coral to transmit electric energy from the United States to Mexico using the international electric transmission facilities of San Diego Gas and Electric Company, El Paso Electric Company, Central Power and Light Company, and Comision Federal de Electricidad, the national utility of Mexico. That two-year authorization (Order EA–212) expired on August 13, 2001.

On June 27, 2001, Coral filed an application with FE for renewal of its authorization to transmit electric energy from the United States to Mexico. That two-year authorization (Order EA–212–A) will expire on August 13, 2003.

On July 8, 2002, Coral filed an application with FE to amend its authorization to transmit electric energy from the United States to Mexico in order to add the recently permitted Baja transmission facilities (Docket PP–234). Coral is an affiliate of Baja California Power, Inc., the owner of the transmission facilities built pursuant to PP–234. Coral also requested that its authorization be extended for a five-year period and that its application be given expedited treatment. On July 11, 2002, the applicant clarified the reason for requesting expedited treatment by stating that completion of the La Rosita plant in Mexico (the power plant that is connected to the permitted facilities, PP–234) is scheduled to be completed and ready to be energized in the first week in August 2002 for testing purposes. No other source of power is readily available for this purpose.

DOE notes that the circumstances described in this application are virtually identical to those for which export authority had previously been granted in FE Order EA–212. Consequently, DOE believes that it has adequately satisfied its responsibilities under the National Environmental Policy Act of 1969 through the documentation of a categorical exclusion in the FE Docket EA–212 proceeding.

Procedural Matters: Any person desiring to become a party to this proceeding or to be heard by filing comments or protests to these applications should file a petition to intervene, comment or protest at the address provided above in accordance with §§ 385.211 or 385.214 of the FERC's Rules of Practice and Procedures (18 CFR 385.211, 385.214). Fifteen copies of each petition and protest should be filed with the DOE on or before the date listed above.

Comments on the Coral application to export electric energy to Mexico should be clearly marked with Docket EA–212–B. Additional copies are to be filed directly with Andrea M. Settanni, Bracewell & Patterson, L.L.P., 2000 K Street, NW., Suite 500, Washington, DC 20006–1872 AND Robert Reilley, Vice President, Regulatory Affairs, Coral Power, L.L.P., 909 Fannin, Suite 700, Houston, TX 77010.

Copies of these applications will be made available, upon request, for public inspection and copying at the address provided above or by accessing the Fossil Energy Home Page at *http://www.fe.doe.gov.* Upon reaching the Fossil Energy Home page, select ''Electricity Regulation'', then ''Pending Procedures'' from the options menus.

Issued in Washington, DC, on August 2, 2002.

Ellen Russell,

Acting Deputy Director, Electric Power Regulation, Office of Coal & Power Imports/Exports, Office of Coal & Power Systems, Office of Fossil Energy.

[FR Doc. 02–20061 Filed 8–7–02; 8:45 am]

BILLING CODE 6450–01–P

DEPARTMENT OF ENERGY

Office of Science Financial Assistance Program Notice 02–27; Research and Development for the Rare Isotope Accelerator

AGENCY: U.S. Department of Energy.

ACTION: Notice inviting grant applications.

SUMMARY: The Nuclear Physics Division (NP), Office of High Energy and Nuclear Physics (HENP), Office of Science (SC), U.S. Department of Energy (DOE), hereby announces interest in receiving applications for Research and Development (R&D) projects directed at the proposed Rare Isotope Accelerator (RIA). RIA is proposed as a new accelerator facility to address emerging research opportunities in low energy nuclear physics, and DOE is sponsoring pre-conceptual R&D activities on the facility.

DATES: The deadline for receipt of formal applications is 4:30 p.m., E.D.T., October 2, 2002, to be accepted for merit review and to permit timely consideration for award in early Fiscal Year 2003.

ADDRESSES: We encourage you to submit formal applications in response to this solicitation electronically through DOE's Industry Interactive Procurement System (IIPS) at: *http://e-center.doe.gov/.* IIPS provides for the posting of solicitations and receipt of applications in a paperless environment via the World Wide Web. Applications must be submitted through IIPS in PDF format by an authorized institutional business official. Questions regarding the operation of IIPS may be e-mailed to the IIPS Help Desk at: *HelpDesk@e-center.doe.gov* or you may call the help desk at (800) 683–0751. Further information on the use of IIPS by the Office of Science is available at: *http://www.sc.doe.gov/production/grants/grants.html.*

If you are unable to submit the application through IIPS, formal applications referencing Program Notice 02–27, should be sent to: U.S. Department of Energy Office, Grants and Contracts Division, SC–64, 19901 Germantown Road, Germantown, MD 20874–1290, ATTN: Program Notice 02–27. This above address must also be used when submitting applications by U.S. Postal Service Express, any commercial mail delivery service, or when hand carried by the applicant.

FOR FURTHER INFORMATION CONTACT: Dr. Eugene A. Henry, Nuclear Physics Division, Office of High Energy and Nuclear Physics, Office of Science, U.S. Department of Energy, 19901 Germantown Road, Germantown, MD 20874–1290; telephone: (301) 903–6093; facsimile: (301) 903–3833; e-mail: *gene.henry@science.doe.gov.* The full text of Program Notice 02–27 is available via the World Wide Web using the following web site address: *http://www.sc.doe.gov/production/grants/grants.html.*

SUPPLEMENTARY INFORMATION: The nuclear science community has proposed the Rare Isotope Accelerator as a new accelerator facility to address emerging research opportunities in nuclear structure, nuclear astrophysics, and fundamental interactions and symmetries. [See the DOE/NSF Nuclear Science Advisory Committee's 2002 Long Range Plan.]

The Department of Energy is sponsoring pre-conceptual research and development for the Rare Isotope Accelerator. Community sponsored studies and workshops have identified a number of areas where focused R&D and prototyping could enhance performance, reduce costs, and impact the engineering and construction schedule. Among these areas are:

- Gas stopper for fast fragments. A key feature of the RIA concept is the use of intense high-energy heavy-ion beams with projectile fragmentation as the production mechanism. The gas stopper will slow the projectile fragments and deliver them for subsequent re-acceleration.
- Fragment momentum compression preceding the gas stopper. To stop fragments efficiently in a finite gas stopper volume, there must be compensation of the large fragment momentum spread.
- Fragment separators that handle beam spray and allow beam sharing. Development work on the front end of the fragment separator is required to minimize radiation damage to the magnetic elements.
- Electron cyclotron resonance (ECR) ion sources producing high intensity, high-charge-state uranium, and the low energy beam transport (LEBT). The driver linear accelerator requires ECR ion source performance for uranium greater than the current state of the art by a factor of 2 to 8.
- Driver technologies, especially superconducting radio-frequency (SRF) structures. The driver linear accelerator will require a number of distinct radio-frequency (RF) structures, likely superconducting, but possibly room temperature. Among the issues to be addressed are beam loss, SRF structure cavity cleanliness, and overall cost.
- Beam stripping. The high power of the heavy ion beams requires innovative solutions to beam strippers such as liquid lithium films, or rotating carbon foil strippers that do not degrade beam emittance.
- High-power targets including liquid lithium for fragmentation and isotope separator on-line (ISOL-type) sources with good diffusion and effusion properties. The development of ISOL-type targets with long lifetimes and fast extraction times at high beam powers are essential for the success of RIA. For in-flight fragmentation and fission, development of a liquid-lithium target, or other new high power fragmentation target concepts, is imperative.
- Other RIA accelerator and experimental facility components will also require focused effort. These include post-acceleration including radio frequency quadrupoles (RFQs) and very low velocity accelerating structures, charge-multiplying ECRs, radiation hardened magnetic equipment, innovative detector instrumentation, beam diagnostics optimized for a broad range of beam intensities, beam dumps, radio-frequency equipment, and controls.

The concept, elements and R&D issues of RIA are outlined in the Nuclear Science Advisory Committee (NSAC) ISOL Taskforce Report that can be found at: *http://www.sc.doe.gov/production/henp/np/.* Select the NSAC button.

Applications requesting support for research and development in the areas outlined above should indicate a separate task for each area. Applications may include more than one task. For each task the application should address the goal of the effort; the method or approach to be taken; the cost and schedule of the effort; the deliverable result of the work; and the performance, cost, or schedule benefit for RIA. Institutional contributions to the effort should be clearly indicated.

Program Funding

It is anticipated that up to $3,500,000 will be available for multiple awards to be made in early Fiscal Year 2003, in the areas described above, contingent on the availability of appropriated funds. Applications should be for one year, with a continuation of up to two additional years for those tasks requiring a multi-year effort. For continuation of multi-year effort, out-year support is contingent on the availability of funds, progress of the research and programmatic needs. For multi-year tasks, intermediate milestones should be indicated.

Collaboration

Applicants are encouraged to collaborate with researchers in other

institutions, such as: Universities, industry, non-profit organizations, federal laboratories and Federally Funded Research and Development Centers (FFRDCs), including the DOE National Laboratories, where appropriate, and to include cost sharing and/or consortia wherever feasible. Additional information on collaboration is available in the Application Guide for the Office of Science Financial Assistance Program that is available via the World Wide Web at: *http://www.sc.doe.gov/production/grants/Colab.html.*

Formal Applications

Information about the development and submission of applications, eligibility, limitations, evaluation, selection process, and other policies and procedures are contained in 10 CFR Part 605, and in the Application Guide for the Office of Science Financial Assistance Program. Electronic access to the latest version of the Office of Science's Financial Assistance Guide and required forms is made available via the World Wide Web at: *http://www.sc.doe.gov/production/grants/grants.html.* DOE is under no obligation to pay for any costs associated with the preparation or submission of applications if an award is not made.

The research project description must be five pages per task or less, exclusive of attachments and must contain an abstract or summary of the proposed research. Projects reporting results or progress on work conducted with DOE funding under the previous RIA R&D program may include two additional pages per task. All collaborators should be listed with the abstract or summary. On the grant face page, form DOE F 4650.2, in block 15, also provide the Principal Investigator's phone number, fax number, and E-mail address. Attachments include curriculum vitae, a listing of all current and pending federal support and letters of intent when collaborations are part of the proposed research. Curriculum vitae should be limited to no more than two pages per individual.

Merit Review

Applications will be subjected to scientific merit review (peer review) and will be evaluated against the following evaluation criteria listed in descending order of importance as codified at 10 CFR part 605.10(d):

1. Scientific and/or Technical Merit of the Project,

2. Appropriateness of the Proposed Method or Approach,

3. Competency of Applicant's Personnel and Adequacy of Proposed Resources,

4. Reasonableness and Appropriateness of the Proposed Budget.

The evaluation will include program policy factors, such as the relevance of the proposed research to the terms of the announcement and agency's programmatic needs. Note, external peer reviewers are selected with regard to both their scientific expertise and the absence of conflict-of-interest issues. Non-federal reviewers may be used, and submission of an application constitutes agreement that this is acceptable to the investigator(s) and the submitting institution.

The Catalog of Federal Domestic Assistance Number for this program is 81.049, and the solicitation control number is ERFAP 10 CFR part 605.

Issued in Washington, DC, on July 30, 2002.

John Rodney Clark,

Associate Director of Science for Resource Management.

[FR Doc. 02–20064 Filed 8–7–02; 8:45 am]

BILLING CODE 6450–02–P

DEPARTMENT OF ENERGY

Federal Energy Regulatory Commission

[Docket No. IC02–907–000, FERC–907]

Public Information Collection and Request for Comments August 2, 2002.

AGENCY: Federal Energy Regulatory Commission.

ACTION: Request for Office of Management and Budget Emergency Processing of proposed information collection and request for comments.

SUMMARY: The Federal Energy Regulatory Commission (Commission) has received Office of Management and Budget (OMB) approval for the following public information collection pursuant to the requirements of Section 3507(j)(1)of the Paperwork Reduction Act of 1995 (Pub. L. No.104–13), and 5 CFR 1320.13 of OMB's regulations. An agency may not conduct or sponsor and a person is not required to respond to a collection of information unless it displays a currently valid control number.

DATES: The Commission and OMB must receive comments on or before August 15, 2002.

ADDRESSES: Send comments to: (1) Michael Miller, Office of the Chief Information Officer, CI–1, Federal Energy Regulatory Commission, 888 First Street, NE., Washington, DC 20426. Mr. Miller can be reached by telephone at (202) 502–8415 and by e-mail at *michael.miller@ferc.fed.us*; and

(2) Ms. Ruth Solomon, FERC Desk Officer, Office of Information and Regulatory Affairs, Office of Management and Budget, Room 10202 NEOB, 725 17th Street, NW., Washington, DC 20503. Ms. Solomon may be reached by telephone at (202) 395–7856 or by fax at (202) 395–7285. Ms. Solomon should be contacted by phone or fax.

FOR FURTHER INFORMATION CONTACT: Mark Klose, Office of the Executive Director, Division of Regulatory Accounting Policy, (202) 219–2595; Federal Energy Regulatory Commission, 888 First Street NE., Washington, DC 20426.

SUPPLEMENTARY INFORMATION: The Federal Energy Regulatory Commission (Commission) in Docket No. RM02–14–000, issued a proposed rule, to amend its Uniform System of Accounts for public utilities, natural gas companies and oil pipeline companies by establishing the documentation necessary to furnish readily full information concerning cash management agreements created by a Commission-regulated subsidiary and a non-regulated parent. Specifically, the Commission is requiring that all such cash management arrangements be in writing and specify the duties and responsibilities of participants in a cash management system (a system in which funds are transferred from multiple accounts to a single account in the parent company's name or a single account with interest earned or charged on the net cash balance position, or in which balances in affiliated companies' accounts are at the same bank as the parent company and transfers are made daily to the parent's account).

The Commission's staff has reviewed several cash management agreements between Commission-regulated companies and their non-regulated parent companies. With only one exception, there was no formal, written agreements at the gas pipelines, electric utilities and oil pipelines among the companies reviewed. There is potential for serious financial harm to Commission-regulated entities if non-regulated parent companies default on accounts payable owed to their regulated subsidiaries. Accordingly, the Commission is proposing to require written cash management agreements for the entities it regulates. Cash management agreements serve to define the rights and responsibilities of the

parties to the agreements plus clarify how the funds will be advanced/transferred and whether interest will be paid and at what rate of interest to the companies providing the funds.

The Commission intends to clearly define the roles and responsibilities of all parties regarding transfers of cash, payment of bills, payment of interest, and the funds that can be taken from the regulated subsidiary. Cash management agreements should be reviewed and updated periodically to ensure that change in the corporate structure has not made the agreements obsolete. Additionally, cash management agreements must provide assurance for Commission-regulated entities and regulators that non-regulated parents aren't exposing their subsidiaries to severe financial harm for the benefit of non-regulated affiliated companies.

Under the statutes that it administers, the Commission has broad authority to act in the public interest and to ensure that adequate supplies of energy are available to the nation at a reasonable cost. Because of the Commission's concern that cash management accounts not be used improperly to impair the financial health of regulated entities, so as to cause harm to the rate paying public, it believes it is appropriate to put into place these requirements to protect the ratepayers.

The Commission has submitted this collection of information to OMB for approval. OMB's regulations describe the process that federal agencies must follow in order to obtain OMB approval for collections of information. See 5 CFR 1320. The standards for emergency processing of information collections appear at 5 CFR 1320.13. If OMB approves a reporting requirement, then it will assign an information control number to that requirement. OMB requires federal agencies seeking approval of information collections to allow the public an opportunity to comment on the proposed information collection. 5 CFR 1320.5(a)(1)(iv). Therefore, the Commission is soliciting comment on:

(1) Whether the collection of information is necessary for the proper performance of the Commission's functions, including whether the information will have practical utility:

(2) The accuracy of the Commission's estimate of the burden of the collection of this information, including the validity of methodology and assumptions used;

(3) The quality, utility, and clarity of the information to be collected; and

(4) How to minimize the burden of the collection of this information on respondents, including the use of appropriate automated electronic, mechanical, or other forms of information technology.

OMB Control No.: (to be assigned).

Expiration Date: 01/31/2002.

Title: Regulation of Cash Management Practices.

IC No.: FERC–907.

Respondents: Businesses or other for -profit.

Estimated annual burden: 896 hours.

Estimated Annual Reporting and/or Recordkeeping cost: $50,418.

Frequency of Response: On occasion.

Obligation to Respond: Mandatory.

Linwood A. Watson, Jr.,

Deputy Secretary.

[FR Doc. 02–20043 Filed 8–7–02; 8:45 am]

BILLING CODE 6717–01–P

DEPARTMENT OF ENERGY

Federal Energy Regulatory Commission

[Docket No. EL02–112–000]

FirstEnergy Solutions Corp., FirstEnergy Generation Corp., Complainant, v. PJM Interconnection, LLC, Respondent; Notice of Complaint

August 2, 2002.

Take notice that on August 1, 2002, FirstEnergy Solutions Corp. and FirstEnergy Generation Corp. (FirstEnergy) filed a Complaint against PJM Interconnection, LLC (''PJM''). In the Complaint, FirstEnergy requests that the Commission issue an order directing PJM to eliminate its eFuel reporting requirement. In the alternative, FirstEnergy requests that the Commission issue an order directing PJM to address the eFuel reporting requirement under the MMU information gathering rules in effect at the time PJM initiated reporting requirement in February 2002.

Copies of this filing were served upon PJM, state regulatory agencies in Ohio, Pennsylvania and New Jersey and others FirstEnergy reasonably knows may be expected to be affected by the Complaint.

Any person desiring to be heard or to protest this filing should file with the Federal Energy Regulatory Commission, 888 First Street, NE., Washington, DC 20426, in accordance with Rules 211 and 214 of the Commission's Rules of Practice and Procedure (18 CFR 385.211 and 385.214). Protests will be considered by the Commission in determining the appropriate action to be taken, but will not serve to make protestants parties to the proceeding. Any person wishing to become a party must file a motion to intervene. The answer to the complaint and all comments, interventions or protests must be filed on or before August 21, 2002. This filing is available for review at the Commission or may be viewed on the Commission's web site at *http://www.ferc.gov* using the ''RIMS'' link, select ''Docket #'' and follow the instructions (call 202–208–2222 for assistance). The answer to the complaint, comments, protests and interventions may be filed electronically via the Internet in lieu of paper; see 18 CFR 385.2001(a)(1)(iii) and the instructions on the Commission's web site under the ''e-Filing'' link. The Commission strongly encourages electronic filings.

Linwood A. Watson, Jr.,

Deputy Secretary.

[FR Doc. 02–20042 Filed 8–7–02; 8:45 am]

BILLING CODE 6717–01–P

DEPARTMENT OF ENERGY

Federal Energy Regulatory Commission

[Docket No. EG02–172–000, *et al.*]

Genova Oklahoma I, LLC, et al.; Electric Rate and Corporate Regulation Filings

July 31, 2002.

The following filings have been made with the Commission. The filings are listed in ascending order within each docket classification.

1. Genova Oklahoma I, LLC

[Docket No. EG02–172–000]

Take notice that on July 25, 2002, Genova Oklahoma I, LLC, 5700 West Plano Parkway, Suite 1000, Plano, Texas 75093, filed with the Federal Energy Regulatory Commission (Commission) an application for determination of exempt wholesale generator status pursuant to part 365 of the Commissions regulations.

Genova Oklahoma I, LLC states it is a limited liability company, organized under the laws of the State of Delaware, and is engaged directly and exclusively in owning and operating the Genova Oklahoma I, LLC electric generating facility (the Project) to be located in Grady County, Oklahoma, and selling electric energy at wholesale from the Project. The Project will consist of a combined cycle combustion turbine unit with a nominal rating of approximately 580 megawatts and associated transmission interconnection components.

Comment Date: August 21, 2002.

2. San Diego Gas & Electric Company, Complainant, v. Sellers of Energy and Ancillary Services Into Markets Operated by the California Independent System Operator and the California Power Exchange, Respondents

[Docket Nos. EL00–95–066 and EL01–68–018]

Investigation of Practices of the California Independent System Operator and the California Power Exchange

[Docket No. EL00–98–055]

Take notice that on July 24, 2002, the California Independent System Operator Corporation (ISO) submitted a filing with the Federal Energy Regulatory Commission (Commission) in compliance with the Commission's July 11, 2002, ''Order on Rehearing, Reconsideration and Clarification'' 100 FERC ¶ 61,050.

The ISO states that it has served copies of this filing upon all parties listed on the official service list for this proceeding.

Comment Date: August 23, 2002.

3. Pacific Gas and Electric Company

[Docket Nos. ER02–358–003, ER01–2998–003, and EL02–64–003]

Take notice that on July 25, 2002, Pacific Gas and Electric Company (PG&E) tendered for filing an errata to its filing dated July 15, 2002 of a Settlement Agreement pursuant to Rule 602 of the Commission's Rules of Practice and Procedure, 18 CFR 385.602. The Settlement Agreement replaces Interconnection Agreements between PG&E and the Northern California Power Agency (NCPA) and between PG&E and the City of Santa Clara, Silicon Valley Power (SVP), on file with the Commission as PG&E First Revised Rate Schedules FERC Nos. 142 and 85. The errata consists of an appendix F to each of these Interconnection Agreements, which Appendices were inadvertently omitted from the July 15, 2002 filing.

Copies of this filing have been served upon all members of he Official Service Lists of the above-mentioned Dockets, the California Public Utilities Commission, and the California Independent System Operator Corporation.

Comment Date: August 15, 2002.

4. Tampa Electric Company

[Docket No. ER02–1663–002]

Take notice that on July 26, 2002, Tampa Electric Company (Tampa Electric) filed a revised unexecuted transmission service agreement between Tampa Electric and Calpine Energy Services, Inc. in compliance with the Federal Energy Regulatory Commission's ''Order Conditionally Accepting for Filing Unexecuted Service Agreement, As Modified,'' issued in Docket No. ER02–1663–000 on June 27, 2002.

A copy of the compliance filing has been served on each person on the service list in Docket No. ER02–1663–000 and the Florida Public Service Commission.

Comment Date: August 16, 2002.

5. Blythe Energy, LLC

[Docket No. ER02–2018–001]

Take notice that on July 26, 2002, Blythe Energy, LLC (Blythe) tendered for filing with the Federal Energy Regulatory Commission a letter submitting certain additional information with respect to Blythe's Application for market-based rate authority filed on June 5, 2002.

Comment Date: August 12, 2002.

Standard Paragraph

E. Any person desiring to intervene or to protest this filing should file with the Federal Energy Regulatory Commission, 888 First Street, NE., Washington, DC 20426, in accordance with Rules 211 and 214 of the Commission's Rules of Practice and Procedure (18 CFR 385.211 and 385.214). Protests will be considered by the Commission in determining the appropriate action to be taken, but will not serve to make protestants parties to the proceeding. Any person wishing to become a party must file a motion to intervene. All such motions or protests should be filed on or before the comment date, and, to the extent applicable, must be served on the applicant and on any other person designated on the official service list. This filing is available for review at the Commission or may be viewed on the Commission's web site at *http://www.ferc.gov* using the ''RIMS'' link, select ''Docket #'' and follow the instructions (call 202–208–2222 for assistance). Protests and interventions may be filed electronically via the Internet in lieu of paper; see 18 CFR 385.2001(a)(1)(iii) and the instructions on the Commission's web site under the ''e-Filing'' link.

Magalie R. Salas,

Secretary.

[FR Doc. 02–20026 Filed 8–7–02; 8:45 am]

BILLING CODE 6717–01–P

DEPARTMENT OF ENERGY

Federal Energy Regulatory Commission

[Docket No. EC02–97–000, et al.]

Wisconsin Public Service Corporation, et al.; Electric Rate and Corporate Regulation Filings

August 1, 2002.

The following filings have been made with the Commission. The filings are listed in ascending order within each docket classification.

1. Wisconsin Public Service Corporation; De Pere Energy L.L.C.

[Docket No. EC02–97–000]

Take notice that on July 26, 2002, Wisconsin Public Service Corporation (WPSC) and De Pere Energy L.L.C. (De Pere Energy) tendered for filing with the Federal Energy Regulatory Commission (Commission) a joint Application pursuant to Section 203 of the Federal Power Act and Part 33 of the Commission's Regulations requesting authorization for De Pere Energy to sell to WPSC the De Pere Energy Center, a 180 MW electric generating facility, including associated transformers and switchyard equipment.

Copies of the filing were served upon the Public Service Commission of Wisconsin and the Michigan Public Service Commission.

Comment Date: August 16, 2002.

2. American Atlas No. 1, Ltd., L.L.L.P.

[Docket No. EC02–98–000]

Take notice that on July 26, 2002, American Atlas No. 1, Ltd., L.L.L.P. (Atlas) tendered for filing an application requesting all necessary authorizations under Section 203 of the Federal Power Act for the sale by Atlas to Tri-State Generation and Transmission Association, Inc. of Atlas's interests in the jurisdictional assets associated with a nominal 75-megawatt cogeneration power plant located in Rifle, Colorado, and known as the American Atlas No. 1 Cogeneration Facility.

Comment Date: August 16, 2002.

3. La Paloma Generating Trust Ltd.; La Paloma Generating Company, LLC

[Docket No. EC02–99–000]

Take notice that on July 26, 2002, La Paloma Generating Trust Ltd. (La Paloma Trust) and La Paloma Generating Company, LLC (La Paloma Gen), tendered for filing with the Federal Energy Regulatory Commission (Commission), pursuant to Section 203 of the Federal Power Act, 16 U.S.C. 824b (1994), and part 33 of the

Commission's regulations, 18 CFR part 33, an application to authorize an assignment of beneficial interests in La Paloma Trust to La Paloma Gen.

Comment Date: August 16, 2002.

4. Big Cajun I Peaking Power LLC

[Docket No. EG02–120–000]

Take notice that on July 30, 2002, Big Cajun I Peaking Power LLC (Big Cajun I Peaking) filed with the Federal Energy Regulatory Commission (Commission) an amendment to its application for determination of exempt wholesale generator status pursuant to section 32 of the Public Utility Holding Company Act of 1935 (PUHCA) and part 365 of the Commission's regulations.

As more fully explained in the application, Big Cajun I Peaking stated that it is a limited liability company that will be engaged either directly or indirectly and exclusively in the business of owning and operating an electric generation facility located in Louisiana.

Comment Date: August 21, 2002.

5. Rocky Mountain Power, Inc.

[Docket No. EG02–173–000]

Take notice that on July 30, 2002, Rocky Mountain Power, Inc. a Montana corporation (Applicant), with its principal executive office at 918 East Divide Avenue, Bismarck, North Dakota, 58506–5650, filed with the Federal Energy Regulatory Commission (Commission) an application for determination of exempt wholesale generator (EWG) status pursuant to part 365 of the Commission's regulations and Section 32 of the Public Utility Holding Company Act of 1935, as amended.

Applicant is in the process of developing a 113 MW (gross) coal-fired, simple-cycle electrical generating facility to be located in Big Horn County, Hardin, Montana. Applicant states that it will be engaged directly and exclusively in the business of owning and operating eligible facilities and selling electric energy at wholesale.

Comment Date: August 22, 2002.

6. Atlantic City Electric Company

[Docket No. ER99–2781–001]

Take notice that on July 29, 2002, Atlantic City Electric Company (Atlantic City) tendered for filing its triennial market power analysis in support of its market-based rate authority in compliance with the Federal Energy Regulatory Commission's May 16, 1996, order accepting Atlantic City's updated market-based tariff. Atlantic City Electric Co., 75 FERC 61,167.

Comment Date: August 19, 2002.

7. Delmarva Power & Light Company

[Docket No. ER99–2781–002]

Take notice that on July 29, 2002, Delmarva Power & Light Company (Delmarva) tendered for filing its triennial market power analysis in support of its market-based rate authority in compliance with the Federal Energy Regulatory Commission's September 26, 1996, order accepting Delmarva's updated market-based tariff. Delmarva Power & Light Co., 75 FERC 61,331.

Comment Date: August 19, 2002.

8. Duke Energy St. Francis LLC

[Docket No. ER99–3118–002]

Take notice that on July 29, 2002, Duke Energy St. Francis LLC (Duke St. Francis) tendered for filing its triennial market power analysis in compliance with the Federal Energy Regulatory Commission Order granting it market-based rate authority in Docket No. ER99–3118–000 on July 28, 1999.

Copies of this filing were served upon those parties on the official service list.

Comment Date: August 19, 2002.

9. Tenaska Georgia Partners, L.P.

[Docket No. ER99–3165–001]

Take notice that on July 29, 2002, Tenaska Georgia Partners, L.P.,(Tenaska Georgia) submitted for filing with the Federal Energy Regulatory Commission its triennial updated market analysis in accordance with Appendix B of the Commission's Order in Minergy Neenah, L.L.C. 88 FERC 61,102.

Questions concerning this filing may be directed to counsel for Tenaska Georgia, Neil L. Levy, Kirkland & Ellis, 655 Fifteenth Street, NW., Suite 1200, Washington, DC 20005, Phone (202) 879–5116, Fax (202) 879–5200, e-mail *Neil_Levy@dc.kirkland.com*.

Comment Date: August 19, 2002.

10. PacifiCorp

[Docket No. ER02–2333–001]

Take notice that on July 26, 2002, PacifiCorp submitted for filing the First Amended and Restated Long-Term Power Sales Agreement (Agreement) between PacifiCorp and Southern California Edison Company (SCE). PacifiCorp inadvertently submitted and outdated version of the redline Rate Schedule No. 248. Please substitute the enclosed correct version of the Rate Schedule.

Comment Date: August 16, 2002.

11. Arizona Public Service Company

[Docket No. ER02–2369–000]

Take notice that on July 26, 2002, Arizona Public Service Company (APS) on behalf of itself, and as the Operating Agent for the Four Corners Participants, hereby submits for filing the Interconnection and Operating Agreement (IOA) under its Open Access Transmission Tariff between the Four Corner Participants and the Interconnection Participants.

The Four Corner Participants consist of the joint owners of a 345-kV Switchyard and include APS, El Paso Electric Company (EPE), Public Service Company of New Mexico (PNM), Salt River Project Agricultural Improvement and Power District (SRP), Southern California Edison Company (SCE), and Tucson Electric Power Company (TEP).

The Interconnection Participants consist of Public Service of Colorado (PSCO), Tri-State Generation and Transmission Association, Inc (Tri-State), and the acting by an through the Administrator, Western Area Power Administration, Department of Energy (Western). The Interconnection Participants have rights to a Shiprock-Four Corners Transmission Line and desire an interconnection to the 345-kV Switchyard of the Four Corner Participants.

A copy of this filing has been served on parties, the appropriate state commissions, and the United States Department of Agriculture, Rural Utilities Service (RUS).

Comment Date: August 16, 2002.

12. California Independent System Operator Corporation

[Docket No. ER02–2370–000]

Take notice that on July 26, 2002, the California Independent System Operator Corporation (ISO) tendered for filing First Revised Service Agreement No. 305 under FERC Electric Tariff, Original Volume No. 1, which is a Participating Generator Agreement (PGA) between the ISO and Gas Recovery Systems, Inc (Gas Recovery Systems). The ISO has revised the PGA to update Original Volume No. 1 of the PGA.

The ISO requests that the revised PGA be made effective as of June 12, 2000. The ISO states that this filing has been served on all entities that are on the official service list for Docket No. ER00–3007–000.

Comment Date: August 16, 2002.

13. DePere Energy L.L.C.

[Docket No. ER02–2371–000]

Take notice that on July 26, 2002, DePere Energy L.L.C. (DePere) filed a Notice of Cancellation of its Power Purchase Agreement with Wisconsin Public Service Corporation (WPSC), which has been designated as DePere's Rate Schedule FERC No. 1. DePere proposes that the cancellation be

effective as of the closing date for the proposed sale of the DePere Energy Center to WPSC.

Comment Date: August 16, 2002.

14. PJM Interconnection, L.L.C.

[Docket No. ER02–2372–000]

Take notice that on July 26, 2002 PJM Interconnection, L.L.C. (PJM), submitted for filing with the Federal Energy Regulatory Commission (Commission) an executed interim interconnection service agreement between PJM and Exelon Corporation.

PJM requests a waiver of the Commission's 60-day notice requirement to permit the effective date agreed to by the parties. Copies of this filing were served upon each of the parties to the agreements and the state regulatory commissions within the PJM region.

Comment Date: August 16, 2002.

15. PJM Interconnection, L.L.C.

[Docket No. ER02–2373–000]

Take notice that on July 26, 2002 PJM Interconnection, L.L.C. (PJM), submitted for filing with the Federal Energy Regulatory Commission (Commission) one executed interconnection service agreement between PJM and FPL Energy Marcus Hook, L.P. and one executed interim interconnection service agreement between PJM and Delaware Municipal Electric Cooperative.

PJM requests a waiver of the Commission's 60-day notice requirement to permit the effective dates agreed to by the parties. Copies of this filing were served upon each of the parties to the agreements and the state regulatory commissions within the PJM region.

Comment Date: August 16, 2002.

16. PJM Interconnection, L.L.C.

[Docket No. ER02–2374–000]

Take notice that on July 26, 2002, PJM Interconnection, L.L.C. (PJM), submitted for filing with the Federal Energy Regulatory Commission (Commission) one executed interim interconnection service agreement between PJM and PSEG Fossil L.L.C. and two executed interconnection service agreements between PJM and Free State Electric, LLC.

PJM requests a waiver of the Commission's 60-day notice requirement to permit the effective dates agreed to by the parties. Copies of this filing were served upon each of the parties to the agreements and the state regulatory commissions within the PJM region.

Comment Date: August 16, 2002.

17. PPL Electric Utilities Corporation

[Docket No. ER02–2375–000]

Take notice that on July 26, 2002, PPL Electric Utilities Corporation (PPL Electric) filed notice of termination of the Service Agreement between it and Sempra Energy Trading Corp. designated as Service Agreement No. 157 under PPL Electric Utilities Corporation's Market-Based Rate and Resale of Transmission Rights Tariff, FERC Electric Tariff, Revised Volume No. 5.

PPL Electric requests that the termination be effective on September 24, 2002. Notice of the termination has been served upon Sempra Energy Trading Corp.

Comment Date: August 16, 2002.

18. Southwest Power Pool, Inc.

[Docket No. ER02–2376–000]

Take notice that on July 29, 2002, Southwest Power Pool, Inc. (SPP) submitted for filing an unexecuted service agreement for Firm Point-to-Point Transmission Service with Kansas Municipal Energy Agency. (Transmission Customer).

SPP seeks an effective date of July 1, 2002 for this service agreement. The Transmission Customer was served with a copy of this filing.

Comment Date: August 19, 2002.

19. Midwest Generation, LLC

[Docket No. ER02–2377–000]

Take notice that on July 29, 2002, Midwest Generation, LLC. (Midwest) , tendered for filing a First Revised Service Agreement No. 2 under Midwest FERC Electric Tariff, Original Volume No. 1 (the Peaking Generating Station Power Purchase Agreement between Commonwealth Edison Company and Midwest).

Comment Date: August 19, 2002.

20. Southern Company Services, Inc.

[Docket No. ER02–2378–000]

Take notice that on July 29, 2002, Southern Company Services, Inc. (SCS), acting on behalf of Alabama Power Company, Georgia Power Company, Gulf Power Company, Mississippi Power Company, and Savannah Electric and Power Company (collectively Southern Companies), filed a Notice of Cancellation of twenty (20) transmission service agreements under the Open Access Transmission Tariff of Southern Companies (Tariff) (FERC Electric Tariff, Fourth Revised Volume No. 5). These cancellations include non-firm point-to-point transmission service agreements under the Tariff between SCS, as agent for Southern Companies, and (I) Valero Power Service Company (Service Agreement No. 33); (ii) Heartland Energy Services (Service Agreement No. 1); (iii) Federal Energy Sales, Inc. (Service Agreement No. 38); (iv) Coastal Electric Service Company (Service Agreement No. 12); (v) KN Marketing, Inc. (Service Agreement No. 37); (vi) Catex Vitol Electric, LLC (Service Agreement No. 9); (vii) Progress Power Marketing, Inc. (Service Agreement No. 53); (viii) PECO Energy Company (Service Agreement No. 44); (ix) Calpine Power Services Company (Service Agreement No. 61); (x) Central Louisiana Electric Company (Service Agreement No. 73); (xi) City of Gainesville, Florida (Service Agreement No. 204); (xii) CMEX Energy, Inc. (Service Agreement No. 24); (xiii) Gulf Stream Energy (Service Agreement No. 40); (ivx) PanEnergy Power Services, Inc. (Service Agreement No. 49); (vx) Questar Energy Trading Company (Service Agreement No. 52); (vxi) Union Electric Company (Service Agreement No. 65); (vxii) Utilicorp United, Inc., (Service Agreement No. 57); and (vxiii) Wisconsin Power & Light (Service Agreement No. 56). Additionally, the Notice of Cancellation includes the Short Term Firm Point-to-Point Transmission Service Agreement between SCS, as agent for Southern Companies, and Catex Vitol Electric, LLC, designated Service Agreement No. 13 under the Tariff as well as the Short Term Firm Point-to-Point Transmission Service Agreement between SCS, as agent for Southern Companies, and PECO Energy Company, designated Service Agreement No. 198 under the Tariff.

Comment Date: August 19, 2002.

21. Xcel Energy Services, Inc. Public Service Company of Colorado

[Docket No. ER02–2379–000]

Take notice that on July 29, 2002, Xcel Energy Services, Inc. (XES), on behalf of Public Service Company of Colorado (PSCo) submitted for filing with the Federal Energy Regulatory Commission (Commission) the Generation Interconnection Agreement between PSCo and Thermo Cogeneration Partnership, L.P.

PSCo requests the letter agreements be accepted for filing effective July 1, 2002, and requests waiver of the Commission's notice requirements in order for the Agreements to be accepted for filing on the date requested.

Comment Date: August 19, 2002.

22. Madison Gas and Electric Company

[Docket No. ER02–2380–000]

Take notice that on July 29, 2002, Madison Gas and Electric Company

(MGE) tendered for filing a service agreement under MGE's Market-Based Power Sales Tariff with NRG Power Marketing Inc.

MGE requests the agreement be effective on the date it was filed with the Federal Energy Regulatory Commission.

Comment Date: August 19, 2002.

Standard Paragraph

E. Any person desiring to intervene or to protest this filing should file with the Federal Energy Regulatory Commission, 888 First Street, NE., Washington, DC 20426, in accordance with Rules 211 and 214 of the Commission's Rules of Practice and Procedure (18 CFR 385.211 and 385.214). Protests will be considered by the Commission in determining the appropriate action to be taken, but will not serve to make protestants parties to the proceeding. Any person wishing to become a party must file a motion to intervene. All such motions or protests should be filed on or before the comment date, and, to the extent applicable, must be served on the applicant and on any other person designated on the official service list. This filing is available for review at the Commission or may be viewed on the Commission's web site at *http://www.ferc.gov* using the ''RIMS'' link, select ''Docket #'' and follow the instructions (call 202–208–2222 for assistance). Protests and interventions may be filed electronically via the Internet in lieu of paper; *see* 18 CFR 385.2001(a)(1)(iii) and the instructions on the Commission's web site under the ''e-Filing'' link.

Linwood A. Watson, Jr.,

Deputy Secretary.

[FR Doc. 02–20041 Filed 8–7–02; 8:45 am]

BILLING CODE 6717–01–P

DEPARTMENT OF ENERGY

Federal Energy Regulatory Commission

Notice of Application Accepted for Filing and Soliciting Comments, Motions to Intervene, and Protests

August 2, 2002.

Take notice that the following hydroelectric application has been filed with the Commission and is available for public inspection:

a. *Type of Application*: Preliminary Permit.

b. *Project No*: 12189–000.

c. *Date Filed*: June 10, 2002.

d. *Applicant*: Skiatook Hydro, LLC.

e. *Name of Project*: Skiatook Dam Hydroelectric Project.

f. *Location*: The proposed project would be located on an existing dam owned by the U.S. Army Corps of Engineers, on Hominy Creek in Osage County, Oklahoma.

g. *Filed Pursuant to*: Federal Power Act, 16 U.S.C. 791(a)–825(r).

h. *Applicant Contact*: Mr. Brent L. Smith, Northwest Power Services, Inc., P.O. Box 535, Rigby, ID 83442, (208) 745–8630.

i. *FERC Contact*: Any questions on this notice should be addressed to Mr. Lynn R. Miles, Sr. at (202) 219–2671.

j. *Deadline for filing motions to intervene, protests and comments*: 60 days from the issuance date of this notice.

All documents (original and eight copies) should be filed with: Magalie R. Salas, Secretary, Federal Energy Regulatory Commission, 888 First Street, NE, Washington, D.C. 20426. Comments, protests and interventions may be filed electronically via the Internet in lieu of paper; see 18 CFR 385.2001(a)(1)(iii) and the instructions on the Commission's web site under the ''e-Filing'' link. The Commission strongly encourages electronic filings. Please include the project number (P–12189–000) on any comments or motions filed.

The Commission's Rules of Practice and Procedure require all interveners filing documents with the Commission to serve a copy of that document on each person in the official service list for the project. Further, if an intervener files comments or documents with the Commission relating to the merits of an issue that may affect the responsibilities of a particular resource agency, they must also serve a copy of the document on that resource agency.

k. *Description of Project*: The proposed run-of-river project using the existing Corps of Engineers' Skiatook Dam would consist of: (1) A 48-inch-diameter, 200-foot-long steel penstock, (2) a powerhouse containing one generating unit with an installed capacity of 1.04 MW, (3) a 15 kv transmission line approximately 3 miles long, and (4) appurtenant facilities. The project would have an annual generation of 5.4 GWh.

l. This filing is available for review at the Commission or may be viewed on the Commission's web site at *http://www.ferc.gov* using the ''RIMS'' link, select ''Docket #'' and follow the instructions (call 202–208–2222 for assistance). A copy is also available for inspection and reproduction at the address in item h above. m.

Preliminary Permit—Anyone desiring to file a competing application for preliminary permit for a proposed project must submit the competing application itself, or a notice of intent to file such an application, to the Commission on or before the specified comment date for the particular application (see 18 CFR 4.36). Submission of a timely notice of intent allows an interested person to file the competing preliminary permit application no later than 30 days after the specified comment date for the particular application. A competing preliminary permit application must conform with 18 CFR 4.30(b) and 4.36.

n. *Preliminary Permit*—Any qualified development applicant desiring to file a competing development application must submit to the Commission, on or before a specified comment date for the particular application, either a competing development application or a notice of intent to file such an application. Submission of a timely notice of intent to file a development application allows an interested person to file the competing application no later than 120 days after the specified comment date for the particular application. A competing license application must conform with 18 CFR 4.30(b) and 4.36.

o. *Notice of Intent*—A notice of intent must specify the exact name, business address, and telephone number of the prospective applicant, and must include an unequivocal statement of intent to submit, if such an application may be filed, either a preliminary permit application or a development application (specify which type of application). A notice of intent must be served on the applicant(s) named in this public notice.

p. *Proposed Scope of Studies under Permit*—A preliminary permit, if issued, does not authorize construction. The term of the proposed preliminary permit would be 36 months. The work proposed under the preliminary permit would include economic analysis, preparation of preliminary engineering plans, and a study of environmental impacts. Based on the results of these studies, the Applicant would decide whether to proceed with the preparation of a development application to construct and operate the project.

q. *Comments, Protests, or Motions to Intervene*—Anyone may submit comments, a protest, or a motion to intervene in accordance with the requirements of Rules of Practice and Procedure, 18 CFR 385.210, 385.211, 385.214. In determining the appropriate action to take, the Commission will consider all protests or other comments filed, but only those who file a motion to intervene in accordance with the Commission's Rules may become a

party to the proceeding. Any comments, protests, or motions to intervene must be received on or before the specified comment date for the particular application.

r. *Filing and Service of Responsive Documents*—Any filings must bear in all capital letters the title ''COMMENTS'', ''NOTICE OF INTENT TO FILE COMPETING APPLICATION'', ''COMPETING APPLICATION'', ''PROTEST'', ''MOTION TO INTERVENE'', as applicable, and the Project Number of the particular application to which the filing refers. Any of the above-named documents must be filed by providing the original and the number of copies provided by the Commission's regulations to: The Secretary, Federal Energy Regulatory Commission, 888 First Street, NE., Washington, DC 20426. An additional copy must be sent to Director, Division of Hydropower Administration and Compliance, Federal Energy Regulatory Commission, at the above-mentioned address. A copy of any notice of intent, competing application or motion to intervene must also be served upon each representative of the Applicant specified in the particular application.

s. *Agency Comments*—Federal, state, and local agencies are invited to file comments on the described application. A copy of the application may be obtained by agencies directly from the Applicant. If an agency does not file comments within the time specified for filing comments, it will be presumed to have no comments. One copy of an agency's comments must also be sent to the Applicant's representatives.

Linwood A. Watson, Jr.,

Deputy Secretary.

[FR Doc. 02–20044 Filed 8–7–02; 8:45 am]

BILLING CODE 6717–01–P

DEPARTMENT OF ENERGY

Federal Energy Regulatory Commission

Notice of Application Accepted for Filing and Soliciting Comments, Motions to Intervene, and Protests

August 2, 2002.

Take notice that the following hydroelectric application has been filed with the Commission and is available for public inspection:

a. *Type of Application:* Preliminary Permit.

b. *Project No:* 12233–000.

c. *Date Filed:* June 17, 2002.

d. *Applicant:* Lavon Hydro, LLC.

e. *Name of Project:* Lavon Dam Hydroelectric Project.

f. *Location:* The proposed project would be located on an existing dam owned by the U.S. Army Corps of Engineers, on the East Fork Trinity River in Collin County, Texas.

g. *Filed Pursuant to:* Federal Power Act, 16 USC §§ 791(a)–825(r).

h. *Applicant Contact:* Mr. Brent L. Smith, Northwest Power Services, Inc., P.O. Box 535, Rigby, ID 83442, (208) 745–8630.

i. *FERC Contact:* Any questions on this notice should be addressed to Mr. Lynn R. Miles, Sr. at (202) 219–2671.

j. *Deadline for filing motions to intervene, protests and comments:* 60 days from the issuance date of this notice.

All documents (original and eight copies) should be filed with: Magalie R. Salas, Secretary, Federal Energy Regulatory Commission, 888 First Street, NE., Washington, DC 20426. Comments, protests and interventions may be filed electronically via the Internet in lieu of paper; see 18 CFR 385.2001(a)(1)(iii) and the instructions on the Commission's web site under the ''e-Filing'' link. The Commission strongly encourages electronic filings. Please include the project number (P–12233–000) on any comments or motions filed.

The Commission's rules of practice and procedure require all interveners filing documents with the Commission to serve a copy of that document on each person in the official service list for the project. Further, if an intervener files comments or documents with the Commission relating to the merits of an issue that may affect the responsibilities of a particular resource agency, they must also serve a copy of the document on that resource agency.

k. *Description of Project:* The proposed project using the existing Corps of Engineers' Lavon Dam would consist of: (1) A 84-inch-diameter, 200-foot-long steel penstock, (2) a powerhouse containing one generating unit with an installed capacity of 1.8 MW, (3) a 25–kv transmission line approximately 1 mile long, and (4) appurtenant facilities. The project would have an annual generation of 7.2 GWh.

l. This filing is available for review at the Commission or may be viewed on the Commission's web site at *http://www.ferc.gov* using the ''RIMS'' link, select ''Docket #'' and follow the instructions (call 202–208–2222 for assistance). A copy is also available for inspection and reproduction at the address in item h above.

m. *Preliminary Permit*—Anyone desiring to file a competing application for preliminary permit for a proposed project must submit the competing application itself, or a notice of intent to file such an application, to the Commission on or before the specified comment date for the particular application (see 18 CFR 4.36). Submission of a timely notice of intent allows an interested person to file the competing preliminary permit application no later than 30 days after the specified comment date for the particular application. A competing preliminary permit application must conform with 18 CFR 4.30(b) and 4.36.

n. *Preliminary Permit*—Any qualified development applicant desiring to file a competing development application must submit to the Commission, on or before a specified comment date for the particular application, either a competing development application or a notice of intent to file such an application. Submission of a timely notice of intent to file a development application allows an interested person to file the competing application no later than 120 days after the specified comment date for the particular application. A competing license application must conform with 18 CFR 4.30(b) and 4.36.

o. *Notice of Intent*—A notice of intent must specify the exact name, business address, and telephone number of the prospective applicant, and must include an unequivocal statement of intent to submit, if such an application may be filed, either a preliminary permit application or a development application (specify which type of application). A notice of intent must be served on the applicant(s) named in this public notice.

p. *Proposed Scope of Studies under Permit*—A preliminary permit, if issued, does not authorize construction. The term of the proposed preliminary permit would be 36 months. The work proposed under the preliminary permit would include economic analysis, preparation of preliminary engineering plans, and a study of environmental impacts. Based on the results of these studies, the Applicant would decide whether to proceed with the preparation of a development application to construct and operate the project.

q. *Comments, Protests, or Motions to Intervene*—Anyone may submit comments, a protest, or a motion to intervene in accordance with the requirements of Rules of Practice and Procedure, 18 CFR 385.210, .211, .214. In determining the appropriate action to take, the Commission will consider all protests or other comments filed, but only those who file a motion to intervene in accordance with the Commission's Rules may become a

party to the proceeding. Any comments, protests, or motions to intervene must be received on or before the specified comment date for the particular application.

r. *Filing and Service of Responsive Documents*—Any filings must bear in all capital letters the title ''COMMENTS'', ''NOTICE OF INTENT TO FILE COMPETING APPLICATION'', ''COMPETING APPLICATION'', ''PROTEST'', ''MOTION TO INTERVENE'', as applicable, and the Project Number of the particular application to which the filing refers. Any of the above-named documents must be filed by providing the original and the number of copies provided by the Commission's regulations to: The Secretary, Federal Energy Regulatory Commission, 888 First Street, NE., Washington, DC 20426. An additional copy must be sent to Director, Division of Hydropower Administration and Compliance, Federal Energy Regulatory Commission, at the above-mentioned address. A copy of any notice of intent, competing application or motion to intervene must also be served upon each representative of the Applicant specified in the particular application.

s. *Agency Comments*—Federal, state, and local agencies are invited to file comments on the described application. A copy of the application may be obtained by agencies directly from the Applicant. If an agency does not file comments within the time specified for filing comments, it will be presumed to have no comments. One copy of an agency's comments must also be sent to the Applicant's representatives.

Linwood A. Watson, Jr.,

Deputy Secretary.

[FR Doc. 02–20045 Filed 8–7–02; 8:45 am]

BILLING CODE 6717–01–P

DEPARTMENT OF ENERGY

Federal Energy Regulatory Commission

Notice of Application Accepted for Filing and Soliciting Comments, Motions to Intervene, and Protests

August 2, 2002.

Take notice that the following hydroelectric application has been filed with the Commission and is available for public inspection:

a. *Type of Application:* Preliminary Permit.

b. *Project No:* 12256–000.

c. *Date Filed:* June 20, 2002.

d. *Applicant:* DeGray Hydro, LLC.

e. *Name of Project:* DeGray Reregulating Dam Hydroelectric Project.

f. *Location:* The proposed project would be located on an existing dam owned by the U.S. Army Corps of Engineers, on the Caddo River in Clark County, Arkansas.

g. *Filed Pursuant to:* Federal Power Act, 16 USC § § 791(a)–825(r).

h. *Applicant Contact:* Mr. Brent L. Smith, Northwest Power Services, Inc., P.O. Box 535, Rigby, ID 83442, (208) 745–8630.

i. *FERC Contact:* Any questions on this notice should be addressed to Mr. Lynn R. Miles, Sr. at (202) 219–2671.

j. *Deadline for filing motions to intervene, protests and comments:* 60 days from the issuance date of this notice.

All documents (original and eight copies) should be filed with: Magalie R. Salas, Secretary, Federal Energy Regulatory Commission, 888 First Street, NE., Washington, DC 20426. Comments, protests and interventions may be filed electronically via the Internet in lieu of paper; see 18 CFR 385.2001(a)(1)(iii) and the instructions on the Commission's web site under the ''e-Filing'' link. The Commission strongly encourages electronic filings. Please include the project number (P–12256–000) on any comments or motions filed.

The Commission's rules of practice and procedure require all interveners filing documents with the Commission to serve a copy of that document on each person in the official service list for the project. Further, if an intervener files comments or documents with the Commission relating to the merits of an issue that may affect the responsibilities of a particular resource agency, they must also serve a copy of the document on that resource agency.

k. *Description of Project:* The proposed run-of-river project using the Corps' existing Degray Reregulating Dam would consist of: (1) An 84-inch-diameter, 200-foot-long steel penstock, (2) a powerhouse containing one generating unit with an installed capacity of 1 MW, (3) a 15-kv transmission line approximately 2 miles long, and (4) appurtenant facilities. The project would have an annual generation of 4.4 GWh.

l. This filing is available for review at the Commission or may be viewed on the Commission's web site at *http://www.ferc.gov* using the ''RIMS'' link, select ''Docket #'' and follow the instructions (call 202–208–2222 for assistance). A copy is also available for inspection and reproduction at the address in item h above.

m. *Preliminary Permit*—Anyone desiring to file a competing application for preliminary permit for a proposed project must submit the competing application itself, or a notice of intent to file such an application, to the Commission on or before the specified comment date for the particular application (see 18 CFR 4.36). Submission of a timely notice of intent allows an interested person to file the competing preliminary permit application no later than 30 days after the specified comment date for the particular application. A competing preliminary permit application must conform with 18 CFR 4.30(b) and 4.36.

n. *Preliminary Permit*—Any qualified development applicant desiring to file a competing development application must submit to the Commission, on or before a specified comment date for the particular application, either a competing development application or a notice of intent to file such an application. Submission of a timely notice of intent to file a development application allows an interested person to file the competing application no later than 120 days after the specified comment date for the particular application. A competing license application must conform with 18 CFR 4.30(b) and 4.36.

o. *Notice of Intent*—A notice of intent must specify the exact name, business address, and telephone number of the prospective applicant, and must include an unequivocal statement of intent to submit, if such an application may be filed, either a preliminary permit application or a development application (specify which type of application). A notice of intent must be served on the applicant(s) named in this public notice.

p. *Proposed Scope of Studies under Permit*—A preliminary permit, if issued, does not authorize construction. The term of the proposed preliminary permit would be 36 months. The work proposed under the preliminary permit would include economic analysis, preparation of preliminary engineering plans, and a study of environmental impacts. Based on the results of these studies, the Applicant would decide whether to proceed with the preparation of a development application to construct and operate the project.

q. *Comments, Protests, or Motions to Intervene*—Anyone may submit comments, a protest, or a motion to intervene in accordance with the requirements of Rules of Practice and Procedure, 18 CFR 385.210, .211, .214. In determining the appropriate action to take, the Commission will consider all protests or other comments filed, but only those who file a motion to intervene in accordance with the Commission's rules may become a party

to the proceeding. Any comments, protests, or motions to intervene must be received on or before the specified comment date for the particular application.

r. *Filing and Service of Responsive Documents*—Any filings must bear in all capital letters the title ''COMMENTS'', ''NOTICE OF INTENT TO FILE COMPETING APPLICATION'', ''COMPETING APPLICATION'', ''PROTEST'', ''MOTION TO INTERVENE'', as applicable, and the Project Number of the particular application to which the filing refers. Any of the above-named documents must be filed by providing the original and the number of copies provided by the Commission's regulations to: The Secretary, Federal Energy Regulatory Commission, 888 First Street, NE., Washington, DC 20426. An additional copy must be sent to Director, Division of Hydropower Administration and Compliance, Federal Energy Regulatory Commission, at the above-mentioned address. A copy of any notice of intent, competing application or motion to intervene must also be served upon each representative of the Applicant specified in the particular application.

s. *Agency Comments*—Federal, state, and local agencies are invited to file comments on the described application. A copy of the application may be obtained by agencies directly from the Applicant. If an agency does not file comments within the time specified for filing comments, it will be presumed to have no comments. One copy of an agency's comments must also be sent to the Applicant's representatives.

Linwood A. Watson, Jr.,

Deputy Secretary.

[FR Doc. 02–20046 Filed 8–7–02; 8:45 am]

BILLING CODE 6717–01–P

DEPARTMENT OF ENERGY

Federal Energy Regulatory Commission

Notice of Application Accepted for Filing, Soliciting Motions to Intervene and Protests, and Establishing Procedural Milestones for Relicensing

August 2, 2002.

Take notice that the following hydroelectric application has been filed with the Commission and is available for public inspection.

a. *Type of Application:* New Major License.

b. *Project No.:* 2984–042.

c. *Date Filed:* March 29, 2002.

d. *Applicant:* S.D. Warren Company.

e. *Name of Project:* Eel Weir Hydroelectric Project.

f. *Location:* The existing project is located on the Presumpscot River at the outlet of Sebago Lake, in Cumberland County, Maine. The project does not affect federal lands.

g. *Filed Pursuant to:* Federal Power Act 16 U.S.C. §§ 791(a)–825(r)

h. *Applicant Contact:* Thomas P. Howard, S.D. Warren Company, 89 Cumberland Street, P.O. Box 5000, Westbrook, ME 04098–1597; Telephone (207) 856–4286

i. *FERC Contact:* Allan Creamer, (202) 502–8365 or *allan.creamer@ferc.gov*.

j. *Deadline for Filing Motions to Intervene and Protests:* 60 days from the issuance date of this notice.

All documents (original and eight copies) should be filed with: Magalie R. Salas, Secretary, Federal Energy Regulatory Commission, 888 First Street, NE., Washington, DC 20426. The Commission strongly encourages electronic filings.

The Commission's rules of practice require all interveners filing documents with the Commission to serve a copy of that document on each person on the official service list for the project. Further, if an intervener files comments or documents with the Commission relating to the merits of an issue that may affect the responsibilities of a particular resource agency, they must also serve a copy of the document on that resource agency.

Motions to intervene and protests may be filed electronically via the Internet in lieu of paper. *See* 18 CFR 385.2001(a)(1)(iii) and the instructions on the Commission's website (*http://www.ferc.gov*) under the ''e-Filing'' link. The Commission strongly encourages electronic filing.

k. *Status:* This application has been accepted for filing, but is not ready for environmental analysis at this time.

l. *Description of Project:* The existing Eel Weir Project operates in a store-and-release mode. The project consists of the following features: (1) A 115-foot-long, 23-foot-high stone masonry spillway dam; (2) a 150-foot-long, 10-foot-high stone and earth-fill east abutment section; (3) a 90-foot-long, 5-foot-high stone and earth-fill west abutment section; (4) five 6.5-foot-high by 4.75-foot-wide discharge gates; (5) four 8.8-foot-high by 7-foot-wide canal intake gates; (6) a 12-mile-long, 28,771-acre impoundment, Sebago Lake, at elevation 266.65 msl; (7) a 6,700-mile-long bypassed reach; (8) a 90-foot-long fish screen, located upstream of the canal gates; (9) a 4,826-foot-long, 15-foot-deep earthen power canal; (10) a 90-foot-long timber-sheathed canal overflow weir; (11) a powerhouse containing three Hercules turbines and generating units, having an installed capacity of 1,800 kilowatts; (12) a 3.5-mile-long, 11-kilovolt transmission line; and (13) appurtenant facilities.

The average annual generation is estimated to be about 12,300 megawatt-hours. All power generated by the project is utilized by the applicant's paper mill in Westbrook, Maine.

m. *Location of the Application:* A copy of application is on file with the Commission and is available for public inspection. The application may be viewed on the web at *http://www.ferc.gov* using the ''FERRIS'' link. Enter the docket number, excluding the last three digits in the docket number field, to access the document. For assistance, call (202) 502–8222. A copy is also available for inspection and reproduction at the address in item h above.

n. Anyone may submit a motion to intervene or protest in accordance with the requirements of rules of practice and procedure, 18 CFR 385.210, 385.211, and 385.214. In determining the appropriate action to take, the Commission will consider all protests filed, but only those who file a motion to intervene in accordance with the Commission's Rules may become a party to the proceeding. Any motions to intervene or protests must be received on or before the specified deadline date for the particular application.

All filings must (1) bear in all capital letters the title ''MOTION TO INTERVENE'' or ''PROTEST;'' (2) set forth in the heading the name of the applicant and the project number of the application to which the filing responds; (3) furnish the name, address, and telephone number of the person intervening or protesting; and (4) otherwise comply with the requirements of 18 CFR 385.2001 through 385.2005. Agencies may obtain copies of the application directly from the applicant. A copy of any motion to intervene or protest must be served upon each representative of the applicant specified in the particular application.

o. *Procedural Schedule and Final Amendments:* The application will be processed according to the following Hydro Licensing Schedule. Revisions to the schedule will be made if the Commission determines it necessary to do so:

Action	Tentative date
Request Additional Information.	August/September 2002.

Action	Tentative date
Issue Scoping Document 1 for Comment.	October 2002.
Hold Scoping Meeting(s).	November 2002.
Request Additional Information (if necessary).	January 2003.
Issue Scoping Document 2.	January 2003.
Notice of Application Ready for Environmental Analysis.	February 2003.
Notice of availability of the draft NEPA document.	August 2003.
Initiate 10(j) process.	October 2003.
Notice of availability of the final NEPA document.	December 2004.
Ready for Commission decision on the application.	March 2004.

Final amendments to the application must be filed with the Commission no later than 30 days from the issuance date of the notice of ready for environmental analysis.

Linwood A. Watson, Jr.,

Deputy Secretary.

[FR Doc. 02–20047 Filed 8–7–02; 8:45 am]

BILLING CODE 6717–01–P

DEPARTMENT OF ENERGY

Federal Energy Regulatory Commission

Notice of Application Accepted for Filing and Soliciting Comments, Motions to Intervene, and Protests

August 2, 2002.

Take notice that the following hydroelectric application has been filed with the Commission and is available for public inspection:

a. *Type of Application:* Preliminary Permit.

b. *Project No:* 12181–000.

c. *Date Filed:* June 4, 2002.

d. *Applicant:* Sequoia Hydro, LLC.

e. *Name of Project:* Sequoia Dam Hydroelectric Project.

f. *Location:* The proposed project would be located on an existing dam owned by YMCA Inc., on the Mill Flat Creek in Fresno County, California. The proposed project would not occupy federal lands or facilities.

g. *Filed Pursuant to:* Federal Power Act, 16 USC § § 791(a)–825(r).

h. *Applicant Contact:* Mr. Brent L. Smith, Northwest Power Services, Inc., P.O. Box 535, Rigby, Idaho 83442, Telephone: (208) 745–8630.

i. *FERC Contact:* Mr. Lynn R. Miles, Sr. (202) 219–2671.

j. Deadline for filing motions to intervene, protests and comments: 60 days from the issuance date of this notice.

All documents (original and eight copies) should be filed with: Magalie R. Salas, Secretary, Federal Energy Regulatory Commission, 888 First Street, NE., Washington, DC 20426. Comments, protests and interventions may be filed electronically via the Internet in lieu of paper; see 18 CFR 385.2001(a)(1)(iii) and the instructions on the Commission's web site under the ''e-Filing'' link. The Commission strongly encourages electronic filings. Please include the project number (P–12181–000) on any comments or motions filed.

The Commission's rules of practice and procedure require all interveners filing documents with the Commission to serve a copy of that document on each person in the official service list for the project. Further, if an intervener files comments or documents with the Commission relating to the merits of an issue that may affect the responsibilities of a particular resource agency, they must also serve a copy of the document on that resource agency.

k. *Description of Project:* The proposed project would consist of: (1) The existing 51-foot-high, 225-feet-long earthfill dam, (2) the existing Sequoia Lake with a surface area of 200 acres and a storage capacity of 1,370 acre-feet at a normal maximum water surface elevation of 5,337 feet msl, (3) a 72-inch-diameter, 700-foot-long steel penstock, (4) a powerhouse with an installed capacity of 1.09 MW, (5) a 15-kv transmission line approximately 2 miles in length, and (6) appurtenant facilities. The project would have an annual generation of 3.905 GWh.

l. This filing is available for review at the Commission or may be viewed on the Commission's web site at *http://www.ferc.gov* using the ''RIMS'' link, select ''Docket #'' and follow the instructions (call 202–208–2222 for assistance). A copy is also available for inspection and reproduction at the address in item h above.

m. Preliminary Permit—Anyone desiring to file a competing application for preliminary permit for a proposed project must submit the competing application itself, or a notice of intent to file such an application, to the Commission on or before the specified comment date for the particular application (see 18 CFR 4.36). Submission of a timely notice of intent allows an interested person to file the competing preliminary permit application no later than 30 days after the specified comment date for the particular application. A competing preliminary permit application must conform with 18 CFR 4.30(b) and 4.36.

n. Preliminary Permit—Any qualified development applicant desiring to file a competing development application must submit to the Commission, on or before a specified comment date for the particular application, either a competing development application or a notice of intent to file such an application. Submission of a timely notice of intent to file a development application allows an interested person to file the competing application no later than 120 days after the specified comment date for the particular application. A competing license application must conform with 18 CFR 4.30(b) and 4.36.

o. *Notice of Intent*—A notice of intent must specify the exact name, business address, and telephone number of the prospective applicant, and must include an unequivocal statement of intent to submit, if such an application may be filed, either a preliminary permit application or a development application (specify which type of application). A notice of intent must be served on the applicant(s) named in this public notice.

p. *Proposed Scope of Studies under Permit*—A preliminary permit, if issued, does not authorize construction. The term of the proposed preliminary permit would be 36 months. The work proposed under the preliminary permit would include economic analysis, preparation of preliminary engineering plans, and a study of environmental impacts. Based on the results of these studies, the Applicant would decide whether to proceed with the preparation of a development application to construct and operate the project.

q. *Comments, Protests, or Motions to Intervene*—Anyone may submit comments, a protest, or a motion to intervene in accordance with the requirements of rules of practice and procedure, 18 CFR 385.210, .211, .214. In determining the appropriate action to take, the Commission will consider all protests or other comments filed, but only those who file a motion to intervene in accordance with the Commission's Rules may become a party to the proceeding. Any comments, protests, or motions to intervene must be received on or before the specified comment date for the particular application.

r. *Filing and Service of Responsive Documents*—Any filings must bear in

all capital letters the title ''COMMENTS'', ''NOTICE OF INTENT TO FILE COMPETING APPLICATION'', ''COMPETING APPLICATION'', ''PROTEST'', ''MOTION TO INTERVENE'', as applicable, and the Project Number of the particular application to which the filing refers. Any of the above-named documents must be filed by providing the original and the number of copies provided by the Commission's regulations to: The Secretary, Federal Energy Regulatory Commission, 888 First Street, NE., Washington, DC 20426. An additional copy must be sent to Director, Division of Hydropower Administration and Compliance, Federal Energy Regulatory Commission, at the above-mentioned address. A copy of any notice of intent, competing application or motion to intervene must also be served upon each representative of the Applicant specified in the particular application.

s. *Agency Comments*—Federal, state, and local agencies are invited to file comments on the described application. A copy of the application may be obtained by agencies directly from the Applicant. If an agency does not file comments within the time specified for filing comments, it will be presumed to have no comments. One copy of an agency's comments must also be sent to the Applicant's representatives.

Linwood A. Watson, Jr.,

Deputy Secretary.

[FR Doc. 02–20050 Filed 8–7–02; 8:45 am]

BILLING CODE 6717–01–P

DEPARTMENT OF ENERGY

Federal Energy Regulatory Commission

Notice of Application Accepted for Filing and Soliciting Comments, Motions To Intervene, and Protests

August 2, 2002.

Take notice that the following hydroelectric application has been filed with the Commission and is available for public inspection:

a. *Type of Application:* Preliminary Permit.

b. *Project No:* 12203–000.

c. *Date Filed:* June 11, 2002.

d. *Applicant:* North San Gabriel Hydro, LLC.

e. *Name of Project:* North San Gabriel Dam Hydroelectric Project.

f. *Location:* The proposed project would be located on an existing dam owned by the U.S. Army Corps of Engineers, on the North Fork San Gabriel River in Williamson County, Texas.

g. *Filed Pursuant to:* Federal Power Act, 16 USC §§ 791(a)–825(r).

h. *Applicant Contact:* Mr. Brent L. Smith, Northwest Power Services, Inc., P.O. Box 535, Rigby, ID 83442.

i. *FERC Contact:* Any questions on this notice should be addressed to Mr. Lynn R. Miles, Sr. at (202) 219–2671.

j. *Deadline for filing motions to intervene, protests and comments:* 60 days from the issuance date of this notice.

All documents (original and eight copies) should be filed with: Magalie R. Salas, Secretary, Federal Energy Regulatory Commission, 888 First Street, NE., Washington, DC 20426. Comments, protests and interventions may be filed electronically via the Internet in lieu of paper; see 18 CFR 385.2001(a)(1)(iii) and the instructions on the Commission's web site under the ''e-Filing'' link. The Commission strongly encourages electronic filings. Please include the project number (P–12203–000) on any comments or motions filed.

The Commission's Rules of Practice and Procedure require all interveners filing documents with the Commission to serve a copy of that document on each person in the official service list for the project. Further, if an intervener files comments or documents with the Commission relating to the merits of an issue that may affect the responsibilities of a particular resource agency, they must also serve a copy of the document on that resource agency.

k. *Description of Project:* The proposed run-of-river project using the Corps of Engineers' existing North San Gabriel Dam would consist of: (1) A 60-inch-diameter, 100-foot-long steel penstock, (2) a powerhouse containing one generating unit with an installed capacity of 1 MW, (3) a 15–kv transmission line approximately 1 mile long, and (4) appurtenant facilities. The project would have an annual generation of 1.8 GWh.

l. This filing is available for review at the Commission or may be viewed on the Commission's web site at *http://www.ferc.gov* using the ''RIMS'' link, select ''Docket #'' and follow the instructions (call 202–208–2222 for assistance). A copy is also available for inspection and reproduction at the address in item h above.

m. *Preliminary Permit*—Anyone desiring to file a competing application for preliminary permit for a proposed project must submit the competing application itself, or a notice of intent to file such an application, to the Commission on or before the specified comment date for the particular application (see 18 CFR 4.36). Submission of a timely notice of intent allows an interested person to file the competing preliminary permit application no later than 30 days after the specified comment date for the particular application. A competing preliminary permit application must conform with 18 CFR 4.30(b) and 4.36.

n. *Preliminary Permit*—Any qualified development applicant desiring to file a competing development application must submit to the Commission, on or before a specified comment date for the particular application, either a competing development application or a notice of intent to file such an application. Submission of a timely notice of intent to file a development application allows an interested person to file the competing application no later than 120 days after the specified comment date for the particular application. A competing license application must conform with 18 CFR 4.30(b) and 4.36.

o. *Notice of Intent*—A notice of intent must specify the exact name, business address, and telephone number of the prospective applicant, and must include an unequivocal statement of intent to submit, if such an application may be filed, either a preliminary permit application or a development application (specify which type of application). A notice of intent must be served on the applicant(s) named in this public notice.

p. *Proposed Scope of Studies under Permit*—A preliminary permit, if issued, does not authorize construction. The term of the proposed preliminary permit would be 36 months. The work proposed under the preliminary permit would include economic analysis, preparation of preliminary engineering plans, and a study of environmental impacts. Based on the results of these studies, the Applicant would decide whether to proceed with the preparation of a development application to construct and operate the project.

q. *Comments, Protests, or Motions to Intervene*—Anyone may submit comments, a protest, or a motion to intervene in accordance with the requirements of Rules of Practice and Procedure, 18 CFR 385.210, .211, .214. In determining the appropriate action to take, the Commission will consider all protests or other comments filed, but only those who file a motion to intervene in accordance with the Commission's Rules may become a party to the proceeding. Any comments, protests, or motions to intervene must be received on or before the specified comment date for the particular application.

r. *Filing and Service of Responsive Documents*—Any filings must bear in all capital letters the title ''COMMENTS'', ''NOTICE OF INTENT TO FILE COMPETING APPLICATION'', ''COMPETING APPLICATION'', ''PROTEST'', ''MOTION TO INTERVENE'', as applicable, and the Project Number of the particular application to which the filing refers. Any of the above-named documents must be filed by providing the original and the number of copies provided by the Commission's regulations to: The Secretary, Federal Energy Regulatory Commission, 888 First Street, NE., Washington, DC 20426. An additional copy must be sent to Director, Division of Hydropower Administration and Compliance, Federal Energy Regulatory Commission, at the above-mentioned address. A copy of any notice of intent, competing application or motion to intervene must also be served upon each representative of the Applicant specified in the particular application.

s. *Agency Comments*—Federal, state, and local agencies are invited to file comments on the described application. A copy of the application may be obtained by agencies directly from the Applicant. If an agency does not file comments within the time specified for filing comments, it will be presumed to have no comments. One copy of an agency's comments must also be sent to the Applicant's representatives.

Linwood A. Watson, Jr.,

Deputy Secretary.

[FR Doc. 02–20051 Filed 8–7–02; 8:45 am]

BILLING CODE 6717–01–P

DEPARTMENT OF ENERGY

Federal Energy Regulatory Commission

Notice of Application Accepted for Filing and Soliciting Comments, Motions to Intervene, and Protests

August 2, 2002.

Take notice that the following hydroelectric application has been filed with the Commission and is available for public inspection:

a. *Type of Application:* Preliminary Permit.

b. *Project No:* 12228–000.

c. *Date Filed:* June 17, 2002.

d. *Applicant:* Hulah Hydro, LLC.

e. *Name of Project:* Hulah Dam Hydroelectric Project.

f. *Location:* The proposed project would be located on an existing dam owned by the U.S. Army Corps of Engineers, on the Caney River in Osage County, Oklahoma.

g. *Filed Pursuant to:* Federal Power Act, 16 USC § § 791(a)–825(r).

h. *Applicant Contact:* Mr. Brent L. Smith, Northwest Power Services, Inc., P.O. Box 535, Rigby, ID 83442, (208) 745–8630.

i. *FERC Contact:* Any questions on this notice should be addressed to Mr. Lynn R. Miles, Sr. at (202) 219–2671.

j. *Deadline for filing motions to intervene, protests and comments:* 60 days from the issuance date of this notice.

All documents (original and eight copies) should be filed with: Magalie R. Salas, Secretary, Federal Energy Regulatory Commission, 888 First Street, NE., Washington, DC 20426. Comments, protests and interventions may be filed electronically via the Internet in lieu of paper; see 18 CFR 385.2001(a)(1)(iii) and the instructions on the Commission's web site under the ''e-Filing'' link. The Commission strongly encourages electronic filings. Please include the project number (P–12228–000) on any comments or motions filed.

The Commission's rules of practice and procedure require all interveners filing documents with the Commission to serve a copy of that document on each person in the official service list for the project. Further, if an intervener files comments or documents with the Commission relating to the merits of an issue that may affect the responsibilities of a particular resource agency, they must also serve a copy of the document on that resource agency.

k. *Description of Project:* The proposed run-of-river project using the existing Corps of Engineers' Hulah Dam would consist of: (1) A 96-inch-diameter, 250-foot-long steel penstock, (2) a powerhouse containing one generating unit with an installed capacity of 1.64 MW, (3) a 15-kv transmission line approximately 1 mile long, and (4) appurtenant facilities. The project would have an annual generation of 2.5 GWh.

l. This filing is available for review at the Commission or may be viewed on the Commission's web site at *http://www.ferc.gov* using the ''RIMS'' link, select ''Docket #'' and follow the instructions (call 202–208–2222 for assistance). A copy is also available for inspection and reproduction at the address in item h above.

m. *Preliminary Permit*—Anyone desiring to file a competing application for preliminary permit for a proposed project must submit the competing application itself, or a notice of intent to file such an application, to the Commission on or before the specified comment date for the particular application (see 18 CFR 4.36). Submission of a timely notice of intent allows an interested person to file the competing preliminary permit application no later than 30 days after the specified comment date for the particular application. A competing preliminary permit application must conform with 18 CFR 4.30(b) and 4.36.

n. *Preliminary Permit*—Any qualified development applicant desiring to file a competing development application must submit to the Commission, on or before a specified comment date for the particular application, either a competing development application or a notice of intent to file such an application. Submission of a timely notice of intent to file a development application allows an interested person to file the competing application no later than 120 days after the specified comment date for the particular application. A competing license application must conform with 18 CFR 4.30(b) and 4.36.

o. *Notice of Intent*—A notice of intent must specify the exact name, business address, and telephone number of the prospective applicant, and must include an unequivocal statement of intent to submit, if such an application may be filed, either a preliminary permit application or a development application (specify which type of application). A notice of intent must be served on the applicant(s) named in this public notice.

p. *Proposed Scope of Studies under Permit*—A preliminary permit, if issued, does not authorize construction. The term of the proposed preliminary permit would be 36 months. The work proposed under the preliminary permit would include economic analysis, preparation of preliminary engineering plans, and a study of environmental impacts. Based on the results of these studies, the Applicant would decide whether to proceed with the preparation of a development application to construct and operate the project.

q. *Comments, Protests, or Motions to Intervene*—Anyone may submit comments, a protest, or a motion to intervene in accordance with the requirements of Rules of Practice and Procedure, 18 CFR 385.210, .211, .214. In determining the appropriate action to take, the Commission will consider all protests or other comments filed, but only those who file a motion to intervene in accordance with the Commission's Rules may become a party to the proceeding. Any comments, protests, or motions to intervene must be received on or before the specified comment date for the particular application.

r. *Filing and Service of Responsive Documents*—Any filings must bear in all capital letters the title ''COMMENTS'', ''NOTICE OF INTENT TO FILE COMPETING APPLICATION'', ''COMPETING APPLICATION'', ''PROTEST'', ''MOTION TO INTERVENE'', as applicable, and the Project Number of the particular application to which the filing refers. Any of the above-named documents must be filed by providing the original and the number of copies provided by the Commission's regulations to: The Secretary, Federal Energy Regulatory Commission, 888 First Street, N.E., Washington, D.C. 20426. An additional copy must be sent to Director, Division of Hydropower Administration and Compliance, Federal Energy Regulatory Commission, at the above-mentioned address. A copy of any notice of intent, competing application or motion to intervene must also be served upon each representative of the Applicant specified in the particular application.

s. *Agency Comments*—Federal, state, and local agencies are invited to file comments on the described application. A copy of the application may be obtained by agencies directly from the Applicant. If an agency does not file comments within the time specified for filing comments, it will be presumed to have no comments. One copy of an agency's comments must also be sent to the Applicant's representatives.

Linwood A. Watson, Jr.,

Deputy Secretary.

[FR Doc. 02–20052 Filed 8–7–02; 8:45 am]

BILLING CODE 6717–01–P

DEPARTMENT OF ENERGY

Federal Energy Regulatory Commission

Notice of Application Accepted for Filing and Soliciting Comments, Motions to Intervene, and Protests

August 2, 2002.

Take notice that the following hydroelectric application has been filed with the Commission and is available for public inspection:

a. *Type of Application*: Preliminary Permit. b

. *Project No*: 12259–000.

c. *Date Filed*: June 21, 2002.

d. *Applicant*: Universal Electric Power Corporation.

e. *Name of Project:* Monongahela L&D No. 2 Hydroelectric Project.

f. *Location*: The proposed project would be located on an existing dam owned by the U.S. Army Corps of Engineers on the Monongahela River in Allegheny County, Pennsylvania.

g. *Filed Pursuant to*: Federal Power Act, 16 U.S.C. 791(a)–825(r).

h. *Applicant Contact*: Mr. Raymond Helter, Universal Electric Power Corporation 1145 Highbrook Street, Akron, OH 44301, (330) 535–7115.

i. *FERC Contact*: Any questions on this notice should be addressed to Mr. Lynn R. Miles, Sr. at (202) 219–2671.

j. *Deadline for filing motions to intervene, protests and comments*: 60 days from the issuance date of this notice.

All documents (original and eight copies) should be filed with: Magalie R. Salas, Secretary, Federal Energy Regulatory Commission, 888 First Street, NE., Washington, DC 20426. Comments, protests and interventions may be filed electronically via the Internet in lieu of paper; see 18 CFR 385.2001(a)(1)(iii) and the instructions on the Commission's web site under the ''e-Filing'' link. The Commission strongly encourages electronic filings. Please include the project number (P–12259–000) on any comments or motions filed.

The Commission's Rules of Practice and Procedure require all interveners filing documents with the Commission to serve a copy of that document on each person in the official service list for the project. Further, if an intervener files comments or documents with the Commission relating to the merits of an issue that may affect the responsibilities of a particular resource agency, they must also serve a copy of the document on that resource agency.

k. *Description of Project*: The proposed run-of-river project using the Corps' existing Monongahela Lock and Dam No. 2 would consist of: (1) six steel penstocks approximately 30 feet in length, each 84 inches in diameter, (2) a powerhouse containing several turbine/generating units with a combined installed capacity of 6.14 MW, (3) a 14.7–kv transmission line approximately 1,800 feet long, and (4) appurtenant facilities. The project would have an annual generation of 24 GWh.

l. This filing is available for review at the Commission or may be viewed on the Commission's web site at *http://www.ferc.gov* using the ''RIMS'' link, select ''Docket #'' and follow the instructions (call 202–208–2222 for assistance). A copy is also available for inspection and reproduction at the address in item h above.

m. *Preliminary Permit*— Anyone desiring to file a competing application for preliminary permit for a proposed project must submit the competing application itself, or a notice of intent to file such an application, to the Commission on or before the specified comment date for the particular application (see 18 CFR 4.36). Submission of a timely notice of intent allows an interested person to file the competing preliminary permit application no later than 30 days after the specified comment date for the particular application. A competing preliminary permit application must conform with 18 CFR 4.30(b) and 4.36.

n. *Preliminary Permit*—Any qualified development applicant desiring to file a competing development application must submit to the Commission, on or before a specified comment date for the particular application, either a competing development application or a notice of intent to file such an application. Submission of a timely notice of intent to file a development application allows an interested person to file the competing application no later than 120 days after the specified comment date for the particular application. A competing license application must conform with 18 CFR 4.30(b) and 4.36.

o. *Notice of Intent*—A notice of intent must specify the exact name, business address, and telephone number of the prospective applicant, and must include an unequivocal statement of intent to submit, if such an application may be filed, either a preliminary permit application or a development application (specify which type of application). A notice of intent must be served on the applicant(s) named in this public notice.

p. *Proposed Scope of Studies under Permit*—A preliminary permit, if issued, does not authorize construction. The term of the proposed preliminary permit would be 36 months. The work proposed under the preliminary permit would include economic analysis, preparation of preliminary engineering plans, and a study of environmental impacts. Based on the results of these studies, the Applicant would decide whether to proceed with the preparation of a development application to construct and operate the project.

q. *Comments, Protests, or Motions to Intervene*—Anyone may submit comments, a protest, or a motion to intervene in accordance with the requirements of Rules of Practice and Procedure, 18 CFR 385.210, 385.211, 385.214. In determining the appropriate action to take, the Commission will consider all protests or other comments filed, but only those who file a motion to intervene in accordance with the Commission's Rules may become a party to the proceeding. Any comments,

protests, or motions to intervene must be received on or before the specified comment date for the particular application.

r. *Filing and Service of Responsive Documents*—Any filings must bear in all capital letters the title ''COMMENTS'', ''NOTICE OF INTENT TO FILE COMPETING APPLICATION'', ''COMPETING APPLICATION'', ''PROTEST'', ''MOTION TO INTERVENE'', as applicable, and the Project Number of the particular application to which the filing refers. Any of the above-named documents must be filed by providing the original and the number of copies provided by the Commission's regulations to: The Secretary, Federal Energy Regulatory Commission, 888 First Street, NE., Washington, DC 20426. An additional copy must be sent to Director, Division of Hydropower Administration and Compliance, Federal Energy Regulatory Commission, at the above-mentioned address. A copy of any notice of intent, competing application or motion to intervene must also be served upon each representative of the Applicant specified in the particular application.

s. *Agency Comments*—Federal, state, and local agencies are invited to file comments on the described application. A copy of the application may be obtained by agencies directly from the Applicant. If an agency does not file comments within the time specified for filing comments, it will be presumed to have no comments. One copy of an agency's comments must also be sent to the Applicant's representatives.

Linwood A. Watson, Jr.,

Deputy Secretary.

[FR Doc. 02–20053 Filed 8–7–02; 8:45 am]

BILLING CODE 6717–01–P

DEPARTMENT OF ENERGY

Federal Energy Regulatory Commission

Notice of Change of Commission Meeting Dates for 2002

August 2, 2002.

The Chairman has approved a change to the public meeting schedule for September through December 2002. The change consists of an additional public meeting scheduled for September 5, 2002. Accordingly, the revised schedule for public meetings for September through December 2002 is as follows:

Thursday, September 5, 2002
Wednesday, September 18, 2002
Wednesday, October 9, 2002
Wednesday, October 30, 2002
Wednesday, November 20, 2002
Wednesday, December 18, 2002

Magalie R. Salas,

Secretary.

[FR Doc. 02–20049 Filed 8–7–02; 8:45 am]

BILLING CODE 6717–01–P

DEPARTMENT OF ENERGY

Georgia-Alabama-South Carolina Rates, Rate OrderNo. SEPA–41

AGENCY: Southeastern Power Administration, DOE.

ACTION: Notice of Rate Order.

SUMMARY: The Secretary of Department of Energy, confirmed and approved, on an interim basis, Rate Schedules SOCO–1–A, SOCO–2–A, SOCO–3–A, SOCO–4–A, ALA–1–J, MISS–1–J, Duke–1–A, Duke–2–A, Duke–3–A, Duke–4–A, Santee–1–A, Santee–2–A, Santee–3–A, Santee–4, SCE&G–1–A, SCE&G–2–A, SCE&G–3–A, SCE&G–4–A, Regulation–1, Replacement–1, Pump–1–A, and Pump–2. The rates were approved on an interim basis through September 30, 2007, and are subject to confirmation and approval by the Federal Energy Regulatory Commission on a final basis.

DATES: Approval of rate on an interim basis is effective through September 30, 2007.

FOR FURTHER INFORMATION CONTACT: Leon Jourolmon, Assistant Administrator, Finance & Marketing, Southeastern Power Administration, Department of Energy, 1166 Athens Tech Road, Elberton, Georgia 30635–6711, (706)–213–3800.

SUPPLEMENTARY INFORMATION: The Federal Energy Regulatory Commission, by Order issued February 26, 1999, in Docket No. EF98–3011–000, confirmed and approved Wholesale Power Rate Schedules SOCO–1, SOCO–2, SOCO–3, SOCO–4, ALA–1–I, MISS–1–I, Duke–1, Duke–2, Duke–3, Duke–4, Santee–1, Santee–2, Santee–3, Santee–4, SCE&G–1, SCE&G–2, SCE&G–3, SCE&G–4, and Pump–1. On April 23, 1999, in Docket No. EF98–3011–001, the Commission issued an order granting rehearing for further consideration. On July 31, 2001, in the same docket number, the Commission issued an order denying rehearing. Rate schedules SOCO–1–A, SOCO–2–A, SOCO–3–A, SOCO–4–A, ALA–1–J, MISS–1–J, Duke–1–A, Duke–2–A, Duke–3–A, Duke–4–A, Santee–1–A, Santee–2–A, Santee–3–A, Santee–4–A, SCE&G–1–A, SCE&G–2–A, SCE&G–3–A, SCE&G–4–A, Regulation–1, Replacement–1, Pump–1–A, and Pump–2 replace these schedules.

Dated: July 25, 2002.

Spencer Abraham,

Secretary.

Order Confirming and Approving Power Rates on an Interim Basis

Pursuant to Sections 302(a) and 301(b) of the Department of Energy Organization Act, Public Law 95–91, the functions of the Secretary of the Interior and the Federal Power Commission under section 5 of the Flood Control Act of 1944, 16 U.S.C. 825s, relating to the Southeastern Power Administration (Southeastern) were transferred to and vested in the Secretary of Energy. By Delegation Order No. 0204–108, effective May 30, 1986, 51 FR 19744 (May 30, 1986), the Secretary of Energy delegated to the Administrator the authority to develop power and transmission rates, and delegated to the Under Secretary the authority to confirm, approve, and place in effect such rates on an interim basis and delegated to the Federal Energy Regulatory Commission (FERC) the authority to confirm and approve on a final basis or to disapprove rates developed by the Administrator under the delegation. On December 6, 2001, the Secretary of Energy issued Delegation Order No. 00–001.00, granting the Deputy Secretary authority to confirm, approve, and place into effect Southeastern's rates on an interim basis. Because there is no Deputy Secretary at the present time, the Secretary of Energy has exercised his authority to confirm, approve, and place into effect on an interim basis the rate schedules in Southeastern Rate Order No. 41.

Background

Power from the Georgia-Alabama-South Carolina System is presently sold under Wholesale Power Rate Schedules SOCO–1, SOCO–2, SOCO–3, SOCO–4, ALA–1–I, MISS–1–I, Duke–1, Duke–2, Duke–3, Duke–4, Santee–1, Santee–2, Santee–3, Santee–4, SCE&G–1, SCE&G–2, SCE&G–3, SCE&G–4, and Pump–1. These rate schedules were approved by the FERC on February 26, 1999, for a period ending September 30, 2003 (93 FERC 62100).

Public Notice and Comment

Notice of proposed rate adjustment was published in the **Federal Register** March 13, 2002 (67 FR 11325). In the notice, SEPA proposed four rate alternatives for public comment. SEPA proposed two rate alternatives that would continue the current rate design that included estimated purchases of replacement energy in the capacity and energy charges from SEPA. These were

designated ''Scenario 1A'' and ''Scenario 1B.'' In addition, SEPA proposed two rate alternatives that included a direct pass through of replacement energy costs. These were designated ''Scenario 2A'' and ''Scenario 2B.'' Under version ''A'' of each of the two alternatives, 70 percent of the generation costs were recovered from capacity sales and 30 percent were recovered from energy sales. Under version ''B'' of each of the two alternatives, 85 percent of the generation costs were recovered from capacity sales and 15 percent were recovered from energy sales.

The notice advised interested parties of a public information and comment forum to be held in Atlanta, Georgia on April 18, 2002. Written comments were accepted on or before June 11, 2002. The following is a summary of the comments:

Staff Evaluation of Public Comments

Written comments were received from nine sources pursuant to this notice. Eight of the sources specified a preference with regards to the distribution of generation costs between capacity and energy. There was no unanimity in preference for the either of the proposed versions (70/30 or 85/15). Most comments did support some movement towards recovering more costs from capacity sales. SEPA is therefore proposing a division of 75 percent to capacity and 25 percent.

The following are additional comments received on or before the June 11, 2002 deadline. SEPA's response follows each comment.

Comment 1: SEPA will establish a Apass-through@ charge for replacement energy. With this change in the rate structure, the Customers will pay for their ratable share of replacement energy in the billing month in which replacement energy is purchased by SEPA. The SeFPC supports this approach, cognizant that it follows the statutory mandate to set rate schedules to allow for the lowest possible costs consistent with sound business principles.

Response 1: SEPA will forward the proposed rate schedule for replacement energy, Replacement–1, to the Deputy Secretary with a request for interim approval.

Comment 2: The Southeastern Federal Power Customers (SeFPC) remains concerned regarding the increase in operation and maintenance (AO&M@) expenses for the U. S. Army Corps of Engineers (Corps). The repayment study assumes an increase from $32,836,000 in fiscal year 2002 to $35,177,000 for fiscal year 2005. The SeFPC believes that this number merits further investigation by SEPA. The SeFPC does not understand why there is an increase for the Corps O&M expense.

Response 2: Actual Corps O&M expenses were $31,735,000 in 1998, $29,090,000 in 1999, $36,692,000 in 2000, and $34,200,000 in 2001, which is an average compound increase of 1.9% per year. Estimated Corps O&M is $32,836,000 in 2002, $33,654,000 in 2003, $34,715,000 in 2004, and $35,177,000 in 2005 through the end of the study, which is an average compound increase of 1.7% per year for the 2002–2005 period. Should these estimates prove to be higher than the actual costs incurred, SEPA's repayment of investment will be greater than anticipated, which will reduce the impact on the next rate adjustment for the system. Should these estimates prove to be too low, SEPA may be required to adjust rates earlier than this filing anticipates. SEPA believes that the estimates provided by the Corps are reasonable. SEPA will work with the Corps and the customers in an effort to reduce O&M expenses charged to power in the Southeastern Federal Power Program.

Comment 3: The SeFPC reminds SEPA that the amount included in rates for renewals and replacements has exceeded the amount appropriated by Congress for renewals and replacements by $124 million.

Response 3: The amount listed represents all of SEPA's four repayment systems. The amount for the Georgia-Alabama-South Carolina System is $39 million. SEPA will work with the Corps to assure the accuracy of projected replacements.

Comment 4: The SeFPC supports the current decision by SEPA not to include costs for the Russell Pumped Storage Units in this rate increase.

Response 4: The Russell Pump Storage units have not been included in these proposed rates.

Comment 5: SEPA has proposed a pass-through mechanism to recover replacement energy costs. Removal of those costs from the charges that recover generation costs results in an effective shift of about two percentage points of generation costs from a capacity charge to an energy charge. Because both of these changes [pass-through recovery of replacement energy and an increase in the percentage of generation costs recovered from capacity] increase revenue stability, it would seem sufficient to implement only one change at this time to stabilize SEPA's revenue as it seeks to respond to the need to provide greater assurance that it will meet its repayment obligations on a more regular basis. Oglethorpe suggests that SEPA consider implementing only one change [in rate design] to provide an opportunity to determine whether that change is sufficient to provide the revenue stability to assure that [SEPA] will meet its repayment obligation.

Response 5: Replacement energy costs are estimated to average $3.2 million per year. Based on this estimate, the comment that this has shifted about two percentage points of generation costs from a capacity charge to an energy charge is accurate. However, there is considerable variation in the actual replacement energy costs associated with this estimate. In an average water year, SEPA will not purchase replacement energy. In a poor water year, replacement energy costs have been as high as $16 million. By recovering replacement energy costs from energy effectively shifts considerable risk of cost fluctuations to energy customers. SEPA believes that this justifies a shift of more than two percent of generation costs from energy to capacity to compensate.

Comment 6: Oglethorpe is concerned about the methodology used to calculate the generation services charge. SEPA has set rates for certain ancillary services based on Southern Company's Open Access Transmission Tariff (OATT). Because SEPA pays Southern Company a flat fee for all ancillary services, SEPA has arbitrarily assumed that reductions in the OATT charges for certain ancillary services were offset by increases in the cost of all other ancillary services purchased by the flat fee. SEPA should reconsider the cost allocation of this flat fee to recognize that its costs were not reduced as a result of reductions in the OATT rate for ancillary services.

Response 6: The Generation Services charge is to recover the cost of ancillary services charged by the Southern Company. SEPA pays Southern Company $4,428,000 annually for ancillary services as part of a negotiated contract for services. SEPA charges affected customers for Scheduling, System Control and Dispatch Services, Reactive Supply and Voltage Control from Generation Sources Services, and Regulation and Frequency Response Services at Southern Company's current OATT rate for these services. Any portion of Southern Company's annual charge for ancillary services not recovered through the above three charges is recovered through a Generation Services charge. The Generation Services charge is charged to all customers of the Georgia-Alabama-South Carolina System.

When Southern Company updates the OATT rates for the three ancillary services listed above, SEPA updates these rates for the affected customers. However, as a result of a negotiated ancillary services charge between SEPA and Southern Company, SEPA does not pay the filed OATT rates, this requires a change in the Generation Services charge.

SEPA established this process with rates that were proposed in 1998. SEPA is proposing to continue this process with these proposed rates. In 1998, SEPA anticipated that the $4,428,000 negotiated ancillary services charge would be replaced with an ''unbundled'' arrangement. SEPA established the design of the generation services charge in anticipation of this unbundling. As such, SEPA does not believe it is appropriate to refer to the rate design as arbitrary.

SEPA continues to anticipate that the negotiated ancillary services charge will be replaced with an unbundled arrangement. The timing of this change is uncertain. However, SEPA believes it is appropriate to continue to pass through any changes in Southern Company's ancillary services to the affected customers when Southern Company adjusts these rates.

Comment 7: SEPA has suggested that it might be able to convert some must run energy into energy that [South Mississippi Electric Power Association (SMEPA) and Alabama Electric Cooperative (AEC)] could schedule during peak hours through a pumping conversion factor. At this time, (SMEPA and AEC are) interested in pursuing this arrangement.

Response 7: SEPA can use must run energy for pumping operations at the Carters, and, if it comes on-line, the Richard B. Russell projects. This would replace pumping energy that SEPA would otherwise purchase. This energy would then become part of the customer's minimum energy. The total energy delivered to the customer would be reduced. SEPA will propose a new rate schedule, Pump–2, to allow customers who elect to allow SEPA to use their must run energy for pumping to receive this energy on-peak at a lower rate than other energy from pumping.

Discussion

System Repayment

An examination of Southeastern's revised system power repayment study, prepared in July, 2002, for the Georgia-Alabama-South Carolina System, shows that with the proposed rates, all system power costs are paid within the 50-year repayment period required by existing law and DOE Procedure RA 6120.2. The Administrator of Southeastern has certified that the rates are consistent with applicable law and that they are the lowest possible rates to customers consistent with sound business principles.

Environmental Impact

Southeastern has reviewed the possible environmental impacts of the rate adjustment under consideration and has concluded that, because the adjusted rates would not significantly affect the quality of the human environment within the meaning of the National Environmental Policy Act of 1969, the proposed action is not a major Federal action for which preparation of an Environmental Impact Statement is required.

Availability of Information

Information regarding these rates, including studies, and other supporting materials is available for public review in the offices of Southeastern Power Administration, 1166 Athens Tech Road, Elberton, Georgia 30635–6711.

Submission to the Federal Energy Regulatory Commission

The rates hereinafter confirmed and approved on an interim basis, together with supporting documents, will be submitted promptly to the Federal Energy Regulatory Commission for confirmation and approval on a final basis for a period beginning October 1, 2002, and ending no later than September 30, 2007.

Order

In view of the foregoing and pursuant to the authority delegated to me by the Secretary of Energy, I hereby confirm and approve on an interim basis, effective October 1, 2007, attached Wholesale Power Rate Schedules SOCO–1–A, SOCO–2–A, SOCO–3–A, SOCO–4–A, ALA–1–J, MISS–1–J, Duke–1–A, Duke–2–A, Duke–3–A, Duke–4–A, Santee–1–A, Santee–2–A, Santee–3–A, Santee–4–A, SCE&G–1–A, SCE&G–2–A, SCE&G–3–A, SCE&G–4–A, Regulation–1, Replacement–1, Pump–1–A, and Pump–2. The rate schedules shall remain in effect on an interim basis through September 30, 2007, unless such period is extended or until the FERC confirms and approves them or substitute rate schedules on a final basis.

Dated: July 25, 2002.

Spencer Abraham,

Secretary.

Wholesale Power Rate Schedule SOCO–1–A

Availability

This rate schedule shall be available to public bodies and cooperatives (any one of whom is hereinafter called the Customer) in Georgia, Alabama, Mississippi, and Florida to whom power may be transmitted and scheduled pursuant to contracts between the Government and Southern Company Services, Incorporated (hereinafter called the Company) and the Customer. Nothing in this rate schedule shall preclude modifications to the aforementioned contracts to allow an eligible customer to elect service under another rate schedule.

Applicability

This rate schedule shall be applicable to the sale at wholesale of power and accompanying energy generated at the Allatoona, Buford, J. Strom Thurmond, Walter F. George, Hartwell, Millers Ferry, West Point, Robert F. Henry, Carters and Richard B. Russell Projects and sold under appropriate contracts between the Government and the Customer. This rate schedule does not apply to energy from pumping operations at the Carters and Richard B. Russell Projects.

Character of Service

The electric capacity and energy supplied hereunder will be delivered at the delivery points of the Customer on the Company's transmission and distribution system.

Monthly Rate

The monthly rate for capacity, energy, and generation services provided under this rate schedule for the period specified shall be:

Capacity Charge

$3.09 Per kilowatt of total contract demand per month.

Energy Charge

6.39 Mills per kilowatt-hour.

Generation Services

$0.13 Per kilowatt of total contract demand per month.

Additional rates for Transmission, System Control, Reactive, and Regulation Services provided under this rate schedule shall be the rates charged Southeastern Power Administration by the Company. Future adjustments to these rates will become effective upon acceptance for filing by the Federal

Energy Regulatory Commission of the Company's rate.

Transmission

$1.51 Per kilowatt of total contract demand per month as of February 2002 is presented for illustrative purposes.

The initial transmission charge will be the Customer's ratable share of the Transmission and Distribution Charges paid by the Government. The initial monthly transmission demand charge shall be determined by multiplying the Government's Load Ratio Share time one twelfth (1/12) of Southern Companies' Annual Transmission Costs as specified in Schedule 1 of the Government-Company Contract. The transmission charges are governed by and subject to refund based upon the determination in proceedings before the Federal Energy Regulatory Commission (FERC) involving Southern Companies' Open Access Transmission Tariff (OATT). The distribution charges may be modified by FERC pursuant to application by the Company under section 205 of the Federal Power Act or the Government under section 206 of the Federal Power Act.

Proceedings before FERC involving the OATT or the Distribution charge may result in the separation of charges currently included in the transmission rate. In this event, the Government may charge the Customer for any and all separate transmission and distribution charges paid by the Government in behalf of the Customer.

Scheduling, System Control and Dispatch Service: $0.0806 Per kilowatt of total contract demand per month.

Reactive Supply and Voltage Control from Generation Sources Service: $0.11 Per kilowatt of total contract demand per month.

Regulation and Frequency Response Service: $0.0483 Per kilowatt of total contract demand per month.

Transmission, System Control, Reactive, and Regulation Services

The charges for Transmission, System Control, Reactive, and Regulation Services shall be governed by and subject to refund based upon the determination in the proceeding involving Southern Companies' Open Access Transmission Tariff.

Contract Demand

The contract demand is the amount of capacity in kilowatts stated in the contract which the Government is obligated to supply and the Customer is entitled to receive.

Energy To Be Furnished by the Government

The Government will sell to the Customer and the Customer will purchase from the Government energy each billing month equivalent to a percentage specified by contract of the energy made available to the company (less applicable losses). The Customer's contract demand and accompanying energy will be allocated proportionately to its individual delivery points served from the Company's system. Applicable energy losses are as follows:

Transmission facilities, 3.0%

Distribution Substations, 0.9%

Distribution Lines, 2.25%

These losses shall be effective until modified by the Federal Energy Regulatory Commission, pursuant to application by Southern Companies under section 205 of the Federal Power Act or SEPA under section 206 of the Federal Power Act or otherwise.

Billing Month

The billing month for power sold under this schedule shall end at 12 midnight on the last day of each calendar month.

Wholesale Power Rate Schedule SOCO–2–A

Availability

This rate schedule shall be available to public bodies and cooperatives (any one of whom is hereinafter called the Customer) in Georgia, Alabama, Mississippi, and Florida to whom power may be transmitted pursuant to contracts between the Government and Southern Company Services, Incorporated (hereinafter called the Company) and the Customer. The Customer is responsible for providing a scheduling arrangement with the Government. Nothing in this rate schedule shall preclude modifications to the aforementioned contracts to allow an eligible customer to elect service under another rate schedule.

Applicability

This rate schedule shall be applicable to the sale at wholesale of power and accompanying energy generated at the Allatoona, Buford, J. Strom Thurmond, Walter F. George, Hartwell, Millers Ferry, West Point, Robert F. Henry, Carters and Richard B. Russell Projects and sold under appropriate contracts between the Government and the Customer. This rate schedule does not apply to energy from pumping operations at the Carters and Richard B. Russell Projects.

Character of Service

The electric capacity and energy supplied hereunder will be delivered at the delivery points of the Customer on the Company's transmission and distribution system.

Monthly Rate

The monthly rate for capacity, energy, and generation services provided under this rate schedule for the period specified shall be:

Capacity Charge: $3.09 Per kilowatt of total contract demand per month.

Energy Charge: 6.39 Mills per kilowatt-hour.

Generation Services: $0.13 Per kilowatt of total contract demand per month.

Additional rates for Transmission, System Control, Reactive, and Regulation Services provided under this rate schedule shall be the rates charged Southeastern Power Administration by the Company. Future adjustments to these rates will become effective upon acceptance for filing by the Federal Energy Regulatory Commission of the Company's rate.

Transmission: $1.51 Per kilowatt of total contract demand per month as of February 2002 is presented for illustrative purposes.

The initial transmission charge will be the Customer's ratable share of the Transmission and Distribution Charges paid by the Government. The initial monthly transmission demand charge shall be determined by multiplying the Government's Load Ratio Share time one twelfth (1/12) of Southern Companies' Annual Transmission Costs as specified in Schedule 1 of the Government-Company Contract. The transmission charges are governed by and subject to refund based upon the determination in proceedings before the Federal Energy Regulatory Commission (FERC) involving Southern Companies' Open Access Transmission Tariff (OATT). The distribution charges may be modified by FERC pursuant to application by the Company under section 205 of the Federal Power Act or the Government under section 206 of the Federal Power Act.

Proceedings before FERC involving the OATT or the Distribution charge may result in the separation of charges currently included in the transmission rate. In this event, the Government may charge the Customer for any and all separate transmission and distribution charges paid by the Government in behalf of the Customer.

Reactive Supply and Voltage Control from Generation Sources Service: $0.11 Per kilowatt of total contract demand per month.

Transmission, System Control, Reactive, and Regulation Services

The charges for Transmission, System Control, Reactive, and Regulation Services shall be governed by and subject to refund based upon the determination in the proceeding involving Southern Companies' Open Access Transmission Tariff.

Contract Demand

The contract demand is the amount of capacity in kilowatts stated in the contract which the Government is obligated to supply and the Customer is entitled to receive.

Energy To Be Furnished by the Government

The Government will sell to the Customer and the Customer will purchase from the Government energy each billing month equivalent to a percentage specified by contract of the energy made available to the company (less applicable losses). The Customer's contract demand and accompanying energy will be allocated proportionately to its individual delivery points served from the Company's system. Applicable energy losses are as follows:

Transmission facilities, 3.0%
Distribution Substations, 0.9%
Distribution Lines, 2.25%

These losses shall be effective until modified by the Federal Energy Regulatory Commission, pursuant to application by Southern Companies under Section 205 of the Federal Power Act or EPA under Section 206 of the Federal Power Act or otherwise.

Billing Month

The billing month for power sold under this schedule shall end at 12 midnight on the last day of each calendar month.

Wholesale Power Rate Schedule SOCO–3–A

Availability

This rate schedule shall be available to public bodies and cooperatives (any one of whom is hereinafter called the Customer) in Georgia, Alabama, Mississippi, and Florida to whom power may be scheduled pursuant to contracts between the Government and Southern Company Services, Incorporated (hereinafter called the Company) and the Customer. The Customer is responsible for providing a transmission arrangement. Nothing in this rate schedule shall preclude modifications to the aforementioned contracts to allow an eligible customer to elect service under another rate schedule.

Applicability

This rate schedule shall be applicable to the sale at wholesale of power and accompanying energy generated at the Allatoona, Buford, J. Strom Thurmond, Walter F. George, Hartwell, Millers Ferry, West Point, Robert F. Henry, Carters and Richard B. Russell Projects (hereinafter referred to collectively as the Projects) and sold under appropriate contracts between the Government and the Customer. This rate schedule does not apply to energy from pumping operations at the Carters and Richard B. Russell Projects.

Character of Service

The electric capacity and energy supplied hereunder will be delivered at the Projects.

Monthly Rate

The monthly rate for capacity, energy, and generation services provided under this rate schedule for the period specified shall be:

Capacity Charge

$3.09 Per kilowatt of total contract demand per month.

Energy Charge: 6.39 Mills per kilowatt-hour.

Generation Services: $0.13 Per kilowatt of total contract demand per month.

Additional rates for Transmission, System Control, Reactive, and Regulation Services provided under this rate schedule shall be the rates charged Southeastern Power Administration by the Company. Future adjustments to these rates will become effective upon acceptance for filing by the Federal Energy Regulatory Commission of the Company's rate.

Scheduling, System Control and Dispatch Service: $0.0806 Per Kilowatt of total contract demand per month.

Regulation and Frequency Response Service: $0.0483 Per Kilowatt of total contract demand per month.

Transmission, System Control, Reactive, and Regulation Services

The charges for Transmission, System Control, Reactive, and Regulation Services shall be governed by and subject to refund based upon the determination in the proceeding involving Southern Companies' Open Access Transmission Tariff.

Contract Demand

The contract demand is the amount of capacity in kilowatts stated in the contract which the Government is obligated to supply and the Customer is entitled to receive.

Energy To Be Furnished by the Government

The Government will sell to the Customer and the Customer will purchase from the Government energy each billing month equivalent to a percentage specified by contract of the energy made available to the company (less applicable losses).

Billing Month

The billing month for power sold under this schedule shall end at 12:00 midnight on the last day of each calendar month.

Wholesale Power Rate Schedule SOCO–4–A

Availability

This rate schedule shall be available to public bodies and cooperatives (any one of whom is hereinafter called the Customer) in Georgia, Alabama, Mississippi, and Florida served through the transmission facilities of Southern Company Service, Inc. (hereinafter called the Company) or the Georgia Integrated Transmission System. The Customer is responsible for providing a scheduling arrangement with the Government and for providing a transmission arrangement. Nothing in this rate schedule shall preclude modifications to the aforementioned contracts to allow an eligible customer to elect service under another rate schedule.

Applicability

This rate schedule shall be applicable to the sale at wholesale of power and accompanying energy generated at the Allatoona, Buford, J. Strom Thurmond, Walter F. George, Hartwell, Millers Ferry, West Point, Robert F. Henry, Carters and Richard B. Russell Projects (hereinafter referred to collectively as the Projects) and sold under appropriate contracts between the Government and the Customer. This rate schedule does not apply to energy from pumping operations at the Carters and Richard B. Russell Projects.

Character of Service

The electric capacity and energy supplied hereunder will be delivered at the Projects.

Monthly Rate

The monthly rate for capacity, energy, and generation services provided under this rate schedule for the period specified shall be:

Capacity Charge: $3.09 Per kilowatt of total contract demand per month.

Energy Charge: 6.39 Mills per kilowatt-hour.

Generation Services: $0.13 Per kilowatt of total contract demand per month.

Additional rates for Transmission, System Control, Reactive, and Regulation Services provided under this rate schedule shall be the rates charged Southeastern Power Administration by the Company. Future adjustments to these rates will become effective upon acceptance for filing by the Federal Energy Regulatory Commission of the Company's rate.

Transmission, System Control, Reactive, and Regulation Services

The charges for Transmission, System Control, Reactive, and Regulation Services shall be governed by and subject to refund based upon the determination in the proceeding involving Southern Companies' Open Access Transmission Tariff.

Contract Demand

The contract demand is the amount of capacity in kilowatts stated in the contract that the Government is obligated to supply and the Customer is entitled to receive.

Energy To Be Furnished by the Government

The Government will sell to the Customer and the Customer will purchase from the Government energy each billing month equivalent to a percentage specified by contract of the energy made available to the company (less applicable losses).

Billing Month

The billing month for power sold under this schedule shall end at 12:00 midnight on the last day of each calendar month.

Wholesale Power Rate Schedule ALA–1–J

Availability

This rate schedule shall be available to the Alabama Electric Cooperative, Incorporated (hereinafter called the Cooperative).

Applicability

This rate schedule shall be applicable to power and accompanying energy generated at the Allatoona, Buford, J. Strom Thurmond, Walter F. George, Hartwell, Millers Ferry, West Point, Robert F. Henry, Carters, and Richard B. Russell Projects and sold under contract between the Cooperative and the Government. This rate schedule does not apply to energy from pumping operations at the Carters and Richard B. Russell Projects.

Character of Service

The electric capacity and energy supplied hereunder will be three-phase alternating current at a nominal frequency of 60 Hertz and shall be delivered at the Walter F. George, West Point, and Robert F. Henry Projects.

Monthly Rate

The monthly rate for capacity, energy, and generation services provided under this rate schedule for the period specified shall be:

Capacity Charge: $3.09 Per kilowatt of total contract demand per month.

Energy Charge: 6.39 Mills per kilowatt-hour.

Generation Services: $0.13 Per kilowatt of total contract demand per month.

Additional rates for Transmission, System Control, Reactive, and Regulation Services provided under this rate schedule shall be the rates charged Southeastern Power Administration by the Southern Company. Future adjustments to these rates will become effective upon acceptance for filing by the Federal Energy Regulatory Commission of the Company's rate.

Transmission, System Control, Reactive, and Regulation Services

The charges for Transmission, System Control, Reactive, and Regulation Services shall be governed by and subject to refund based upon the determination in the proceeding involving Southern Companies' Open Access Transmission Tariff.

Energy To Be Furnished by the Government

The Government will sell to the Cooperative and the Cooperative will purchase from the Government those quantities of energy specified by contract as available to the Cooperative for scheduling on a weekly basis.

Billing Month

The billing month for power sold under this schedule shall end at 12 midnight on the last day of each calendar month.

Wholesale Power Rate Schedule MISS–1–J

Availability

This rate schedule shall be available to the South Mississippi Electric Power Association (hereinafter called the Customer) to whom power may be wheeled pursuant to contracts between the Government and Alabama Electric Cooperative, Inc. (hereinafter called AEC).

Applicability

This rate schedule shall be applicable to the sale at wholesale of power and accompanying energy generated at the Allatoona, Buford, J. Strom Thurmond, Walter F. George, Hartwell, Millers Ferry, West Point, Robert F. Henry, Carters and Richard B. Russell Projects and sold under appropriate contracts between the Government and the Customer. This rate schedule does not apply to energy from pumping operations at the Carters and Richard B. Russell Projects.

Character of Service

The electric capacity and energy supplied hereunder will be threephase alternating current at a nominal frequency of 60 Hertz delivered at the delivery points of the Customer on AEC's transmission and distribution system. The voltage of delivery will be maintained within the limits established by the state regulatory commission.

Monthly Rate

The monthly rate for capacity, energy, and generation services provided under this rate schedule for the period specified shall be:

Capacity Charge: $3.09 Per kilowatt of total contract demand per month.

Energy Charge: 6.39 Mills per kilowatt-hour.

Generation Services: $0.13 Per kilowatt of total contract demand per month.

Additional rates for Transmission, System Control, Reactive, and Regulation Services provided under this rate schedule shall be the rates charged Southeastern Power Administration by the Company. Future adjustments to these rates will become effective upon acceptance for filing by the Federal Energy Regulatory Commission of the Company's rate.

Transmission

$1.854 per kilowatt of total contract demand per month as of February 2002 is presented for illustrative purposes. This rate is subject to annual adjustment on January 1, and will be computed subject to the Appendix A attached to the Government-AEC contract.

Transmission, System Control, Reactive, and Regulation Services

The charges for Transmission, System Control, Reactive, and Regulation Services shall be governed by and subject to refund based upon the determination in the proceeding involving Southern Companies' Open Access Transmission Tariff.

Contract Demand

The contract demand is the amount of capacity in kilowatts stated in the contract that the Government is obligated to supply and the Customer is entitled to receive.

Energy To Be Furnished by the Government

The Government will sell to the Cooperative and the Cooperative will purchase from the Government those quantities of energy specified by contract as available to the Cooperative for scheduling on a weekly basis.

Billing Month

The billing month for power sold under this schedule shall end at 12 midnight on the last day of each calendar month.

Wholesale Power Rate Schedule Duke–1–A

Availability

This rate schedule shall be available to public bodies and cooperatives (any one of whom is hereinafter called the Customer) in North Carolina and South Carolina to whom power may be transmitted and scheduled pursuant to contracts between the Government and Duke Power Company (hereinafter called the Company) and the Customer. Nothing in this rate schedule shall preclude modifications to the aforementioned contracts to allow an eligible customer to elect service under another rate schedule.

Applicability

This rate schedule shall be applicable to the sale at wholesale of power and accompanying energy generated at the Allatoona, Buford, J. Strom Thurmond, Walter F. George, Hartwell, Millers Ferry, West Point, Robert F. Henry, Carters and Richard B. Russell Projects and sold under appropriate contracts between the Government and the Customer. This rate schedule does not apply to energy from pumping operations at the Carters and Richard B. Russell Projects.

Character of Service

The electric capacity and energy supplied hereunder will be delivered at the delivery points of the Customer on the Company's transmission and distribution system.

Monthly Rate

The monthly rate for capacity, energy, and generation services provided under this rate schedule for the period specified shall be:

Capacity Charge: $3.09 Per kilowatt of total contract demand per month.

Energy Charge: 6.39 Mills per kilowatt-hour.

Generation Services: $0.13 Per kilowatt of total contract demand per month.

Additional rates for Transmission, System Control, Reactive, and Regulation Services provided under this rate schedule shall be the rates charged Southeastern Power Administration by the Company. Future adjustments to these rates will become effective upon acceptance for filing by the Federal Energy Regulatory Commission of the Company's rate.

Transmission: $0.93 Per kilowatt of total contract demand per month as of February 2002 is presented for illustrative purposes.

The initial transmission charge will be the Customers' ratable share of the Transmission Distribution Charges paid by the Government. The initial monthly transmission demand charge shall reflect the Government's Load Ratio Share Responsibility. The Load Ratio Share shall be computed each month and shall be the ratio of the Network Load to the average of the Company's Transmission System load for each of the 12 preceding months. The Company's Transmission System Load shall be the load as determined in Section 34.3 of the Company's Pro Forma Open Access Transmission Tariff (the Tariff). The Government shall pay a monthly demand charge which shall be determined by multiplying its Load Ratio Share by 1/12 of the Annual Transmission Revenue Requirement set forth in Attachment H of the Company's Tariff.

Proceedings before FERC involving the Tariff may result in the separation of charges currently included in the transmission rate. In this event, the Government may charge the Customer for any and all separate transmission and distribution charges paid by the Government in behalf of the Customer.

Contract Demand

The contract demand is the amount of capacity in kilowatts stated in the contract which the Government is obligated to supply and the Customer is entitled to receive.

Energy To Be Furnished by the Government

The Government will sell to the Customer and the Customer will purchase from the Government energy each billing month equivalent to a percentage specified by contract of the energy made available to the company (less applicable losses of three per cent (3%)). The Customer's contract demand and accompanying energy will be allocated proportionately to its individual delivery points served from the Company's system. These losses shall be effective until modified by the Federal Energy Regulatory Commission, pursuant to application by the Company under section 205 of the Federal Power Act or SEPA under Section 206 of the Federal Power Act or otherwise.

Billing Month

The billing month for power sold under this schedule shall end at 12 midnight on the last day of each calendar month.

Wholesale Power Rate Schedule Duke–2–A

Availability

This rate schedule shall be available to public bodies and cooperatives (any one of whom is hereinafter called the Customer) in North Carolina and South Carolina to whom power may be transmitted pursuant to contracts between the Government and Duke Power Company (hereinafter called the Company) and the Customer. The Customer is responsible for providing a scheduling arrangement with the Government. Nothing in this rate schedule shall preclude modifications to the aforementioned contracts to allow an eligible customer to elect service under another rate schedule.

Applicability

This rate schedule shall be applicable to the sale at wholesale of power and accompanying energy generated at the Allatoona, Buford, J. Strom Thurmond, Walter F. George, Hartwell, Millers Ferry, West Point, Robert F. Henry, Carters and Richard B. Russell Projects and sold under appropriate contracts between the Government and the Customer. This rate schedule does not apply to energy from pumping operations at the Carters and Richard B. Russell Projects.

Character of Service

The electric capacity and energy supplied hereunder will be delivered at the delivery points of the Customer on the Company's transmission and distribution system.

Monthly Rate

The monthly rate for capacity, energy, and generation services provided under this rate schedule for the period specified shall be:

Capacity Charge: $3.09 Per kilowatt of total contract demand per month.

Energy Charge: 6.39 Mills per kilowatt-hour.

Generation Services: $0.13 Per kilowatt of total contract demand per month.

Additional rates for Transmission, System Control, Reactive, and Regulation Services provided under this rate schedule shall be the rates charged Southeastern Power Administration by the Company. Future adjustments to these rates will become effective upon acceptance for filing by the Federal Energy Regulatory Commission of the Company's rate.

Transmission: $0.93 Per kilowatt of total contract demand per month as of February 2002 is presented for illustrative purposes.

The initial transmission charge will be the Customers' ratable share of the Transmission Distribution Charges paid by the Government. The initial monthly transmission demand charge shall reflect the Government's Load Ratio Share Responsibility. The Load Ratio Share shall be computed each month and shall be the ratio of the Network Load to the average of the Company's Transmission System load for each of the 12 preceding months. The Company's Transmission System Load shall be the load as determined in Section 34.3 of the Company's Pro Forma Open Access Transmission Tariff (the Tariff). The Government shall pay a monthly demand charge which shall be determined by multiplying its Load Ratio Share by 1/12 of the Annual Transmission Revenue Requirement set forth in Attachment H of the Company's Tariff.

Proceedings before FERC involving the Tariff may result in the separation of charges currently included in the transmission rate. In this event, the Government may charge the Customer for any and all separate transmission and distribution charges paid by the Government in behalf of the Customer.

Contract Demand

The contract demand is the amount of capacity in kilowatts stated in the contract which the Government is obligated to supply and the Customer is entitled to receive.

Energy To Be Furnished by the Government

The Government will sell to the Customer and the Customer will purchase from the Government energy each billing month equivalent to a percentage specified by contract of the energy made available to the company (less applicable losses of three per cent (3%)). The Customer's contract demand and accompanying energy will be allocated proportionately to its individual delivery points served from the Company's system. These losses shall be effective until modified by the Federal Energy Regulatory Commission, pursuant to application by the Company under section 205 of the Federal Power Act or SEPA under section 206 of the Federal Power Act or otherwise.

Billing Month

The billing month for power sold under this schedule shall end at 12 midnight on the last day of each calendar month.

Wholesale Power Rate Schedule Duke–3–A

Availability

This rate schedule shall be available to public bodies and cooperatives (any one of whom is hereinafter called the Customer) in North Carolina and South Carolina to whom power may be scheduled pursuant to contracts between the Government and Duke Power Company (hereinafter called the Company) and the Customer. The Customer is responsible for providing a transmission arrangement. Nothing in this rate schedule shall preclude modifications to the aforementioned contracts to allow an eligible customer to elect service under another rate schedule.

Applicability

This rate schedule shall be applicable to the sale at wholesale of power and accompanying energy generated at the Allatoona, Buford, J. Strom Thurmond, Walter F. George, Hartwell, Millers Ferry, West Point, Robert F. Henry, Carters and Richard B. Russell Projects and sold under appropriate contracts between the Government and the Customer. This rate schedule does not apply to energy from pumping operations at the Carters and Richard B. Russell Projects.

Character of Service

The electric capacity and energy supplied hereunder will be delivered at the Savannah River Projects.

Monthly Rate

The monthly rate for capacity, energy, and generation services provided under this rate schedule for the period specified shall be:

Capacity Charge: $3.09 Per kilowatt of total contract demand per month.

Energy Charge: 6.39 Mills per kilowatt-hour.

Generation Services: $0.13 Per kilowatt of total contract demand per month.

Additional rates for Transmission, System Control, Reactive, and Regulation Services provided under this rate schedule shall be the rates charged Southeastern Power Administration by the Company. Future adjustments to these rates will become effective upon acceptance for filing by the Federal Energy Regulatory Commission of the Company's rate.

Contract Demand

The contract demand is the amount of capacity in kilowatts stated in the contract which the Government is obligated to supply and the Customer is entitled to receive.

Energy To Be Furnished by the Government

The Government will sell to the Customer and the Customer will purchase from the Government energy each billing month equivalent to a percentage specified by contract of the energy made available to the company (less applicable losses).

Billing Month

The billing month for power sold under this schedule shall end at 12 midnight on the last day of each calendar month.

Wholesale Power Rate Schedule Duke–4–A

Availability

This rate schedule shall be available to public bodies and cooperatives (any one of whom is hereinafter called the Customer) in North Carolina and South Carolina served through the transmission facilities of Duke Power Company (hereinafter called the Company) and the Customer. The Customer is responsible for providing a scheduling arrangement with the Government and for providing a transmission arrangement with the Company. Nothing in this rate schedule shall preclude modifications to the aforementioned contracts to allow an eligible customer to elect service under another rate schedule.

Applicability

This rate schedule shall be applicable to the sale at wholesale of power and accompanying energy generated at the Allatoona, Buford, J. Strom Thurmond, Walter F. George, Hartwell, Millers Ferry, West Point, Robert F. Henry, Carters and Richard B. Russell Projects and sold under appropriate contracts between the Government and the Customer. This rate schedule does not apply to energy from pumping operations at the Carters and Richard B. Russell Projects.

Character of Service

The electric capacity and energy supplied hereunder will be delivered at the Savannah River Projects.

Monthly Rate

The monthly rate for capacity, energy, and generation services provided under this rate schedule for the period specified shall be:

Capacity Charge: $3.09 Per kilowatt of total contract demand per month.

Energy Charge: 6.39 Mills per kilowatt-hour.

Generation Services: $0.13 Per kilowatt of total contract demand per month.

Additional rates for Transmission, System Control, Reactive, and Regulation Services provided under this rate schedule shall be the rates charged Southeastern Power Administration by the Company. Future adjustments to these rates will become effective upon acceptance for filing by the Federal Energy Regulatory Commission of the Company's rate.

Contract Demand

The contract demand is the amount of capacity in kilowatts stated in the contract which the Government is obligated to supply and the Customer is entitled to receive.

Energy To Be Furnished by the Government

The Government will sell to the Customer and the Customer will purchase from the Government energy each billing month equivalent to a percentage specified by contract of the energy made available to the company (less applicable losses).

Billing Month

The billing month for power sold under this schedule shall end at 12 midnight on the last day of each calendar month.

Wholesale Power Rate Schedule Santee–1–A

Availability

This rate schedule shall be available to public bodies and cooperatives (any one of whom is hereinafter called the Customer) in South Carolina to whom power may be wheeled and scheduled pursuant to contracts between the Government and South Carolina Public Service Authority (hereinafter called the Authority). Nothing in this rate schedule shall preclude an eligible customer from electing service under another rate schedule.

Applicability

This rate schedule shall be applicable to the sale at wholesale of power and accompanying energy generated at the Allatoona, Buford, J. Strom Thurmond, Walter F. George, Hartwell, Millers Ferry, West Point, Robert F. Henry, Carters and Richard B. Russell Projects and sold under appropriate contracts between the Government and the Customer. This rate schedule does not apply to energy from pumping operations at the Carters and Richard B. Russell Projects.

Character of Service

The electric capacity and energy supplied hereunder will be delivered at the delivery points of the Customer on the Authority's transmission and distribution system.

Monthly Rate

The monthly rate for capacity, energy, and generation services provided under this rate schedule for the period specified shall be:

Capacity Charge: $3.09 Per kilowatt of total contract demand per month.

Energy Charge: 6.39 Mills per kilowatt-hour.

Generation Services: $0.13 Per kilowatt of total contract demand per month.

Additional rates for Transmission, System Control, Reactive, and Regulation Services provided under this rate schedule shall be the rates charged Southeastern Power Administration by the Authority. Future adjustments to these rates will become effective upon acceptance for filing by the Federal Energy Regulatory Commission of the Authority's rate.

Transmission: $1.59 Per kilowatt of total contract demand per month as of February 2002 is presented for illustrative purposes.

The initial transmission rate is subject to annual adjustment on July 1 of each year, and will be computed subject to the formula contained in Appendix A to the Government-Authority Contract.

Proceedings before the Federal Energy Regulatory Commission involving the Authority's Open Access Transmission Tariff may result in the separation of charges currently included in the transmission rate. In this event, the Government may charge the Customer for any and all separate transmission and distribution charges paid by the Government in behalf of the Customer.

Contract Demand

The contract demand is the amount of capacity in kilowatts stated in the contract which the Government is obligated to supply and the Customer is entitled to receive.

Energy To Be Furnished by the Government

The Government will sell to the Customer and the Customer will purchase from the Government energy each billing month equivalent to a percentage specified by contract of the energy made available to the Authority (less applicable losses of two per cent (2%)). The Customer's contract demand and accompanying energy will be allocated proportionately to its individual delivery points served from the Authority's system.

Billing Month

The billing month for power sold under this schedule shall end at 12:00 midnight on the last day of each calendar month.

Service Interruption

When energy delivery to the Customer's system for the account of the Government is reduced or interrupted, and such reduction or interruption is not due to conditions on the Customer's system, the demand charge for the month shall be appropriately reduced as to kilowatts of such capacity which have been interrupted or reduced for each day in accordance with the following formula:

Wholesale Power Rate Schedule Santee–2–A

Availability

This rate schedule shall be available to public bodies and cooperatives (any one of whom is hereinafter called the Customer) in South Carolina to whom power may be wheeled pursuant to contracts between the Government and South Carolina Public Service Authority (hereinafter called the Authority). The customer is responsible for providing a scheduling arrangement with the Government. Nothing in this rate schedule shall preclude an eligible customer from electing service under another rate schedule.

Applicability

This rate schedule shall be applicable to the sale at wholesale of power and accompanying energy generated at the Allatoona, Buford, J. Strom Thurmond, Walter F. George, Hartwell, Millers Ferry, West Point, Robert F. Henry, Carters and Richard B. Russell Projects and sold under appropriate contracts between the Government and the Customer. This rate schedule does not apply to energy from pumping operations at the Carters and Richard B. Russell Projects.

Character of Service

The electric capacity and energy supplied hereunder will be delivered at the delivery points of the Customer on the Authority's transmission and distribution system.

Monthly Rate

The monthly rate for capacity, energy, and generation services provided under this rate schedule for the period specified shall be:

Capacity Charge: $3.09 Per kilowatt of total contract demand per month.

Energy Charge: 6.39 Mills per kilowatt-hour.

Generation Services: $0.13 Per kilowatt of total contract demand per month.

Additional rates for Transmission, System Control, Reactive, and Regulation Services provided under this rate schedule shall be the rates charged Southeastern Power Administration by the Authority. Future adjustments to these rates will become effective upon acceptance for filing by the Federal Energy Regulatory Commission of the Authority's rate.

Transmission: $1.59 Per kilowatt of total contract demand per month as of February 2002 is presented for illustrative purposes.

The initial transmission rate is subject to annual adjustment on July 1 of each year, and will be computed subject to the formula contained in Appendix A to the Government-Authority Contract.

Proceedings before the Federal Energy Regulatory Commission involving the Authority's Open Access Transmission Tariff may result in the separation of charges currently included in the transmission rate. In this event, the Government may charge the Customer for any and all separate transmission and distribution charges paid by the Government in behalf of the Customer.

Contract Demand

The contract demand is the amount of capacity in kilowatts stated in the contract that the Government is obligated to supply and the Customer is entitled to receive.

Energy To Be Furnished by the Government

The Government will sell to the Customer and the Customer will purchase from the Government energy each billing month equivalent to a percentage specified by contract of the energy made available to the Authority (less applicable losses of two per cent (2%)). The Customer's contract demand and accompanying energy will be allocated proportionately to its individual delivery points served from the Authority's system.

Billing Month

The billing month for power sold under this schedule shall end at 12:00 midnight on the last day of each calendar month.

Service Interruption

When energy delivery to the Customer's system for the account of the Government is reduced or interrupted, and such reduction or interruption is not due to conditions on the Customer's system, the demand charge for the month shall be appropriately reduced as to kilowatts of such capacity which have been interrupted or reduced for each day in accordance with the following formula:

Wholesale Power Rate Schedule Santee–3–A

Availability

This rate schedule shall be available to public bodies and cooperatives (any one of whom is hereinafter called the Customer) in South Carolina to whom power may be scheduled pursuant to contracts between the Government and South Carolina Public Service Authority (hereinafter called the Authority). The customer is responsible for providing a transmission arrangement. Nothing in this rate schedule shall preclude an eligible customer from electing service under another rate schedule.

Applicability

This rate schedule shall be applicable to the sale at wholesale of power and accompanying energy generated at the Allatoona, Buford, J. Strom Thurmond, Walter F. George, Hartwell, Millers Ferry, West Point, Robert F. Henry, Carters and Richard B. Russell Projects and sold under appropriate contracts between the Government and the Customer. This rate schedule does not apply to energy from pumping operations at the Carters and Richard B. Russell Projects.

Character of Service

The electric capacity and energy supplied hereunder will be delivered at the Projects.

Monthly Rate

The monthly rate for capacity, energy, and generation services provided under this rate schedule for the period specified shall be:

Capacity Charge: $3.09 Per kilowatt of total contract demand per month.

Energy Charge: 6.39 Mills per kilowatt-hour.

Generation Services: $0.13 Per kilowatt of total contract demand per month.

Additional rates for Transmission, System Control, Reactive, and Regulation Services provided under this rate schedule shall be the rates charged Southeastern Power Administration by the Authority. Future adjustments to these rates will become effective upon acceptance for filing by the Federal Energy Regulatory Commission of the Authority's rate.

Contract Demand

The contract demand is the amount of capacity in kilowatts stated in the contract which the Government is obligated to supply and the Customer is entitled to receive.

Energy To Be Furnished by the Government

The Government will sell to the Customer and the Customer will purchase from the Government energy each billing month equivalent to a percentage specified by contract of the energy made available to the Authority (less applicable losses).

Billing Month

The billing month for power sold under this schedule shall end at 12:00 midnight on the last day of each calendar month.

Service Interruption

When energy delivery to the Customer's system for the account of the Government is reduced or interrupted, and such reduction or interruption is not due to conditions on the Customer's system, the demand charge for the month shall be appropriately reduced as to kilowatts of such capacity which have been interrupted or reduced for each day in accordance with the following formula:

Wholesale Power Rate Schedule Santee–4–A

Availability

This rate schedule shall be available to public bodies and cooperatives (any one of whom is hereinafter called the Customer) in South Carolina served through the transmission facilities of South Carolina Public Service Authority (hereinafter called the Authority). The customer is responsible for providing a scheduling arrangement with the Government and for providing a transmission arrangement. Nothing in this rate schedule shall preclude an eligible customer from electing service under another rate schedule.

Applicability

This rate schedule shall be applicable to the sale at wholesale of power and accompanying energy generated at the Allatoona, Buford, J. Strom Thurmond, Walter F. George, Hartwell, Millers Ferry, West Point, Robert F. Henry, Carters and Richard B. Russell Projects and sold under appropriate contracts between the Government and the Customer. This rate schedule does not apply to energy from pumping operations at the Carters and Richard B. Russell Projects.

Character of Service

The electric capacity and energy supplied hereunder will be delivered at the Projects.

Monthly Rate

The monthly rate for capacity, energy, and generation services provided under this rate schedule for the period specified shall be:

Capacity Charge: $3.09 Per kilowatt of total contract demand per month.

Energy Charge: 6.39 Mills per kilowatt-hour.

Generation Services: $0.13 Per kilowatt of total contract demand per month.

Additional rates for Transmission, System Control, Reactive, and Regulation Services provided under this rate schedule shall be the rates charged Southeastern Power Administration by the Authority. Future adjustments to these rates will become effective upon acceptance for filing by the Federal Energy Regulatory Commission of the Authority's rate.

Contract Demand

The contract demand is the amount of capacity in kilowatts stated in the contract that the Government is obligated to supply and the Customer is entitled to receive.

Energy To Be Furnished by the Government

The Government will sell to the Customer and the Customer will purchase from the Government energy each billing month equivalent to a percentage specified by contract of the energy made available to the Authority (less applicable losses).

Billing Month

The billing month for power sold under this schedule shall end at 12 midnight on the last day of each calendar month.

Service Interruption

When energy delivery to the Customer's system for the account of the Government is reduced or interrupted, and such reduction or interruption is not due to conditions on the Customer's system, the demand charge for the month shall be appropriately reduced as to kilowatts of such capacity which have been interrupted or reduced for each day in accordance with the following formula:

Wholesale Power Rate Schedule SCE&G–1–A

Availability

This rate schedule shall be available public bodies and cooperatives (any one of which is hereinafter called the Customer) in South Carolina to whom power may be wheeled and scheduled pursuant to contracts between the Government and the South Carolina Electric & Gas Company (hereinafter called the Company). Nothing in this rate schedule shall preclude an eligible customer from electing service under another rate schedule.

Applicability

This rate schedule shall be applicable to the sale at wholesale of power and accompanying energy generated at the Allatoona, Buford, J. Strom Thurmond, Walter F. George, Hartwell, Millers Ferry, West Point, Robert F. Henry, Carters and Richard B. Russell Projects and sold under appropriate contracts between the Government and the Customer. This rate schedule does not apply to energy from pumping operations at the Carters and Richard B. Russell Projects.

Character of Service

The electric capacity and energy supplied hereunder will be delivered at the delivery points of the Customer on the Company's transmission and distribution system.

Monthly Rate

The monthly rate for capacity, energy, and generation services provided under this rate schedule for the period specified shall be:

Capacity Charge: $3.09 Per kilowatt of total contract demand per month.

Energy Charge: 6.39 Mills per kilowatt-hour.

Generation Services: $0.13 Per kilowatt of total contract demand per month.

Additional rates for Transmission, System Control, Reactive, and Regulation Services provided under this rate schedule shall be the rates charged Southeastern Power Administration by the Company. Future adjustments to these rates will become effective upon acceptance for filing by the Federal Energy Regulatory Commission of the Company's rate.

Transmission: $1.13 Per kilowatt of total contract demand per month as of February 2002 is presented for illustrative purposes.

The initial rate will be subject to monthly adjustment and will be computed subject to Section 7 of the Government-Company contract.

Proceedings before the Federal Energy Regulatory Commission involving the Company's Open Access Transmission Tariff may result in the separation of charges currently included in the transmission rate. In this event, the Government may charge the Customer for any and all separate transmission and distribution charges paid by the Government in behalf of the Customer.

Contract Demand

The contract demand is the amount of capacity in kilowatts stated in the contract which the Government is obligated to supply and the Customer is entitled to receive.

Energy To Be Furnished by the Government

The Government will sell to the Customer and the Customer will purchase from the Government energy each billing month equivalent to a percentage specified by contract of the energy made available to the company (less applicable losses). The Customer's contract demand and accompanying energy will be allocated proportionately to its individual delivery points served from the Company's system.

Billing Month

The billing month for power sold under this schedule shall end at 12:00 midnight on the last day of each calendar month.

Conditions of Service

The Customer shall at its own expense provide, install, and maintain on its side of each delivery point the equipment necessary to protect and control its own system. In so doing, the installation, adjustment, and setting of all such control and protective equipment at or near the point of delivery shall be coordinated with that which is installed by and at the expense of the Company on its side of the delivery point.

Wholesale Power Rate Schedule SCE&G–2–A

Availability

This rate schedule shall be available public bodies and cooperatives (any one of which is hereinafter called the Customer) in South Carolina to whom

power may be wheeled pursuant to contracts between the Government and the South Carolina Electric & Gas Company (hereinafter called the Company). The customer is responsible for providing a scheduling arrangement with the Government. Nothing in this rate schedule shall preclude an eligible customer from electing service under another rate schedule.

Applicability

This rate schedule shall be applicable to the sale at wholesale of power and accompanying energy generated at the Allatoona, Buford, J. Strom Thurmond, Walter F. George, Hartwell, Millers Ferry, West Point, Robert F. Henry, Carters and Richard B. Russell Projects and sold under appropriate contracts between the Government and the Customer. This rate schedule does not apply to energy from pumping operations at the Carters and Richard B. Russell Projects.

Character of Service

The electric capacity and energy supplied hereunder will be delivered at the delivery points of the Customer on the Company's transmission and distribution system.

Monthly Rate

The monthly rate for capacity, energy, and generation services provided under this rate schedule for the period specified shall be:

Capacity Charge: $3.09 Per kilowatt of total contract demand per month.

Energy Charge: 6.39 Mills per kilowatt-hour.

Generation Services: $0.13 Per kilowatt of total contract demand per month.

Additional rates for Transmission, System Control, Reactive, and Regulation Services provided under this rate schedule shall be the rates charged Southeastern Power Administration by the Company. Future adjustments to these rates will become effective upon acceptance for filing by the Federal Energy Regulatory Commission of the Company's rate.

Transmission: $1.13 Per kilowatt of total contract demand per month as of February 2002 is presented for illustrative purposes.

The initial rate will be subject to monthly adjustment and will be computed subject to Section 7 of the Government-Company contract.

Proceedings before the Federal Energy Regulatory Commission involving the Company's Open Access Transmission Tariff may result in the separation of charges currently included in the transmission rate. In this event, the Government may charge the Customer for any and all separate transmission and distribution charges paid by the Government in behalf of the Customer.

Contract Demand

The contract demand is the amount of capacity in kilowatts stated in the contract which the Government is obligated to supply and the Customer is entitled to receive.

Energy To Be Furnished by the Government

The Government will sell to the Customer and the Customer will purchase from the Government energy each billing month equivalent to a percentage specified by contract of the energy made available to the company (less applicable losses). The Customer's contract demand and accompanying energy will be allocated proportionately to its individual delivery points served from the Company's system.

Billing Month

The billing month for power sold under this schedule shall end at 12:00 midnight on the last day of each calendar month.

Conditions of Service

The Customer shall at its own expense provide, install, and maintain on its side of each delivery point the equipment necessary to protect and control its own system. In so doing, the installation, adjustment, and setting of all such control and protective equipment at or near the point of delivery shall be coordinated with that which is installed by and at the expense of the Company on its side of the delivery point.

Wholesale Power Rate Schedule SCE&G–3–A

Availability

This rate schedule shall be available public bodies and cooperatives (any one of which is hereinafter called the Customer) in South Carolina to whom power may be scheduled pursuant to contracts between the Government and the South Carolina Electric & Gas Company (hereinafter called the Company). The customer is responsible for providing a transmission arrangement. Nothing in this rate schedule shall preclude an eligible customer from electing service under another rate schedule.

Applicability

This rate schedule shall be applicable to the sale at wholesale of power and accompanying energy generated at the Allatoona, Buford, J. Strom Thurmond, Walter F. George, Hartwell, Millers Ferry, West Point, Robert F. Henry, Carters and Richard B. Russell Projects and sold under appropriate contracts between the Government and the Customer. This rate schedule does not apply to energy from pumping operations at the Carters and Richard B. Russell Projects.

Character of Service

The electric capacity and energy supplied hereunder will be delivered at the Projects.

Monthly Rate

The monthly rate for capacity, energy, and generation services provided under this rate schedule for the period specified shall be:

Capacity Charge: $3.09 Per kilowatt of total contract demand per month.

Energy Charge: 6.39 Mills per kilowatt-hour.

Generation Services: $0.13 Per kilowatt of total contract demand per month.

Additional rates for Transmission, System Control, Reactive, and Regulation Services provided under this rate schedule shall be the rates charged Southeastern Power Administration by the Company. Future adjustments to these rates will become effective upon acceptance for filing by the Federal Energy Regulatory Commission of the Company's rate.

Contract Demand

The contract demand is the amount of capacity in kilowatts stated in the contract that the Government is obligated to supply and the Customer is entitled to receive.

Energy To Be Furnished by the Government

The Government will sell to the Customer and the Customer will purchase from the Government energy each billing month equivalent to a percentage specified by contract of the energy made available to the company (less applicable losses).

Billing Month

The billing month for power sold under this schedule shall end at 12:00 midnight on the last day of each calendar month.

Conditions of Service

The Customer shall at its own expense provide, install, and maintain on its side of each delivery point the equipment necessary to protect and control its own system. In so doing, the installation, adjustment, and setting of all such control and protective

equipment at or near the point of delivery shall be coordinated with that which is installed by and at the expense of the Company on its side of the delivery point.

Wholesale Power Rate Schedule SCE&G–4–A

Availability

This rate schedule shall be available public bodies and cooperatives (any one of which is hereinafter called the Customer) in South Carolina served through the transmission facilities of South Carolina Electric & Gas Company (hereinafter called the Company). The customer is responsible for providing a scheduling arrangement with the Government and for providing a transmission arrangement. Nothing in this rate schedule shall preclude an eligible customer from electing service under another rate schedule.

Applicability

This rate schedule shall be applicable to the sale at wholesale of power and accompanying energy generated at the Allatoona, Buford, J. Strom Thurmond, Walter F. George, Hartwell, Millers Ferry, West Point, Robert F. Henry, Carters and Richard B. Russell Projects and sold under appropriate contracts between the Government and the Customer. This rate schedule does not apply to energy from pumping operations at the Carters and Richard B. Russell Projects.

Character of Service

The electric capacity and energy supplied hereunder will be delivered at the Projects.

Monthly Rate

The monthly rate for capacity, energy, and generation services provided under this rate schedule for the period specified shall be:

Capacity Charge: $3.09 Per kilowatt of total contract demand per month.

Energy Charge: 6.39 Mills per kilowatt-hour.

Generation Services: $0.13 Per kilowatt of total contract demand per month.

Additional rates for Transmission, System Control, Reactive, and Regulation Services provided under this rate schedule shall be the rates charged Southeastern Power Administration by the Company. Future adjustments to these rates will become effective upon acceptance for filing by the Federal Energy Regulatory Commission of the Company's rate.

Contract Demand

The contract demand is the amount of capacity in kilowatts stated in the contract that the Government is obligated to supply and the Customer is entitled to receive.

Energy To Be Furnished by the Government

The Government will sell to the Customer and the Customer will purchase from the Government energy each billing month equivalent to a percentage specified by contract of the energy made available to the company (less applicable losses).

Billing Month

The billing month for power sold under this schedule shall end at 12 midnight on the last day of each calendar month.

Conditions of Service

The Customer shall at its own expense provide, install, and maintain on its side of each delivery point the equipment necessary to protect and control its own system. In so doing, the installation, adjustment, and setting of all such control and protective equipment at or near the point of delivery shall be coordinated with that which is installed by and at the expense of the Company on its side of the delivery point.

Wholesale Rate Schedule Regulation-1

Availability

This rate schedule shall be available to public bodies and cooperatives (any one of whom is hereinafter called the Customer) in Georgia, Alabama, Mississippi, Florida, South Carolina, or North Carolina to whom service is provided pursuant to contracts between the government and the customer.

Applicability

This rate schedule shall be applicable to the sale of regulation services provided from the Allatoona, Buford, J. Strom Thurmond, Walter F. George, Hartwell, Millers Ferry, West Point, Robert F. Henry, Carters, and Richard B. Russell Projects (hereinafter called the Projects) and sold under appropriate contracts between the Government and the Customer.

Character of Service

The service supplied hereunder will be delivered at the Projects.

Monthly Rate

The rate for service supplied under this rate schedule for the period specified shall be: $0.05 per kilowatt of total contract demand per month.

Contract Demand

The contract demand is the amount of capacity in kilowatts stated in the contract to which the Government is obligated to supply and the Customer is entitled to receive regulation service.

Billing Month

The billing month for services provided under this schedule shall end at 12 midnight on the last day of each calendar month.

Wholesale Power Rate Schedule Replacement-1

Availability

This rate schedule shall be available to public bodies and cooperatives (any one of whom is hereinafter called the Customer) in Georgia, Alabama, Mississippi, Florida, South Carolina, or North Carolina to whom power is provided pursuant to contracts between the Government and the customer.

Applicability

This rate schedule shall be applicable to the sale at wholesale energy purchased to meet contract minimum energy and sold under appropriate contracts between the Government and the Customer.

Character of Service

The energy supplied hereunder will be delivered at the delivery points provided for under appropriate contracts between the Government and the Customer.

Monthly Rate

The rate for energy sold under this rate schedule for the months specified shall be: [computed to the nearest $.00001 (1/100 mill) per kwh]; (The weighted average cost of energy for replacement energy divided by one minus losses for delivery.)

Where: The weighted average cost of energy for replacement energy is equal to the cost of replacement energy purchased divided by the replacement energy purchased, net losses.

= Dollars cost of energy purchased for replacement energy during the specified month, including all direct costs to deliver energy to the project.

= Kilowatt-hours of energy purchased for replacement energy during the specified month.

= Energy loss factor for transmission on replacement energy purchased (Expected to be 0 or zero percent.)

= Weighted average energy loss factor on energy delivered by the facilitator to the customer.

Energy To Be Furnished by the Government

The Government will sell to the Customer and the Customer will purchase from the Government energy each billing month equivalent to a percentage specified by contract of the energy made available to the Facilitator (less any losses required by the Facilitator). The Customer's contract demand and accompanying energy will be allocated proportionately to its individual delivery points served from the Facilitator's system.

Billing Month

The billing month for power sold under this schedule shall end at 12:00 midnight on the last day of each calendar month.

Wholesale Power Rate Schedule Pump–1–A

Availability

This rate schedule shall be available to public bodies and cooperatives (any one of whom is hereinafter called the Customer) in Georgia, Alabama, Mississippi, Florida, South Carolina, or North Carolina to whom power is provided pursuant to contracts between the Government and the customer.

Applicability

This rate schedule shall be applicable to the sale at wholesale energy generated from pumping operations at the Carters and Richard B. Russell Projects and sold under appropriate contracts between the Government and the Customer. The energy will be segregated from energy from other pumping operations.

Character of Service

The energy supplied hereunder will be delivered at the delivery points provided for under appropriate contracts between the Government and the Customer.

Monthly Rate

The rate for energy sold under this rate schedule for the months specified shall be:

[computed to the nearest $.00001 (1/100 mill) per kwh]

(The weighted average cost of energy for pumping divided by the energy conversion factor, quantity divided by one minus losses for delivery.)

Where:

(The weighted average cost of energy for pumping for this rate schedule is equal to the cost of energy purchased or supplied for the benefit of the customer for pumping divided by the total energy for pumping.)

(Cost of energy for pumping for this rate schedule is equal to the cost of energy purchased or supplied for the benefit of the customer plus the cost of energy in storage carried over from the month preceding the specified month.)

(Energy for pumping for this rate schedule is equal to the energy purchased or supplied for the benefit of the customer, after losses, plus the energy for pumping in storage as of the end of the month preceding the specified month.)

(Cost of energy in storage is equal to the weighted average cost of energy for pumping for the month preceding the specified month times the energy for pumping in storage at the end of the month preceding the specified month.)

= Dollars cost of energy purchased or supplied for the benefit of the customer for pumping during the specified month, including all direct costs to deliver energy to the project.

= Kilowatt-hours of energy purchased or supplied for the benefit of the customer for pumping during the specified month.

= Energy loss factor for transmission on energy purchased or supplied for the benefit of the customer for pumping (Expected to be .03 or three percent.)

= Kilowatt-hours of energy in storage as of the end of the month immediately preceding the specified month.

= Weighted average cost of energy for pumping for the month immediately preceding the specified month.

(Weighted average energy conversion factor is equal to the energy generated from pumping divided by the total energy for pumping)

= Energy generated from pumping.

= Weighted average energy loss factor on energy delivered by the facilitator to the customer.

Energy To Be Furnished by the Government

The Government will sell to the Customer and the Customer will purchase from the Government energy each billing month equivalent to a percentage specified by contract of the energy made available to the Facilitator (less any losses required by the Facilitator). The Customer's contract demand and accompanying energy will be allocated proportionately to its individual delivery points served from the Facilitator's system.

Billing Month

The billing month for power sold under this schedule shall end at 12:00 midnight on the last day of each calendar month.

Wholesale Power Rate Schedule Pump-2

Availability

This rate schedule shall be available to public bodies and cooperatives who provide their own scheduling arrangement and elect to allow Southeastern to use a portion of their allocation for pumping (any one of whom is hereinafter called the Customer) in Georgia, Alabama, Mississippi, Florida, South Carolina, or North Carolina to whom power is provided pursuant to contracts between the Government and the customer.

Applicability

This rate schedule shall be applicable to the sale at wholesale energy generated from pumping operations at the Carters and Richard B. Russell Projects and sold under appropriate contracts between the Government and the Customer. This energy will be segregated from energy from other pumping operations.

Character of Service

The energy supplied hereunder will be delivered at the delivery points provided for under appropriate contracts between the Government and the Customer.

Monthly Rate

The rate for energy sold under this rate schedule for the months specified shall be:

[computed to the nearest $.00001 (1/100 mill) per kwh]

(The weighted average cost of energy for pumping divided by the energy conversion factor, quantity divided by one minus losses for delivery.)

Where:

(The weighted average cost of energy for pumping for this rate schedule is equal to the cost of energy purchased or supplied for the benefit of the customer for pumping divided by the total energy for pumping.)

(Cost of energy for pumping for this rate schedule is equal to the cost of energy purchased or supplied for the benefit of the customer plus the cost of energy in storage carried over from the month preceding the specified month.)

(Energy for pumping for this rate schedule is equal to the energy purchased or supplied for the benefit of the customer, after losses, plus the

energy for pumping in storage as of the end of the month preceding the specified month.)

(Cost of energy in storage is equal to the weighted average cost of energy for pumping for the month preceding the specified month times the energy for pumping in storage at the end of the month preceding the specified month.)

= Dollars cost of energy purchased or supplied for the benefit of the customer for pumping during the specified month, including all direct costs to deliver energy to the project.

= Kilowatt-hours of energy purchased or supplied for the benefit of the customer for pumping during the specified month.

= Energy loss factor for transmission on energy purchased or supplied for the benefit of the customer for pumping (Expected to be .03 or three percent.)

= Kilowatt-hours of energy in storage as of the end of the month immediately preceding the specified month.

= Weighted average cost of energy for pumping for the month immediately preceding the specified month.

(Weighted average energy conversion factor is equal to the energy generated from pumping divided by the total energy for pumping)

= Energy generated from pumping.

= Weighted average energy loss factor on energy delivered by the facilitator to the customer.

Energy To Be Furnished by the Government

The Government will sell to the Customer and the Customer will purchase from the Government energy each billing month equivalent to a percentage specified by contract of the energy made available to the Facilitator (less any losses required by the Facilitator). The Customer's contract demand and accompanying energy will be allocated proportionately to its individual delivery points served from the Facilitator's system.

Billing Month

The billing month for power sold under this schedule shall end at 12:00 midnight on the last day of each calendar month.

[FR Doc. 02–20060 Filed 8–7–02; 8:45 am]

BILLING CODE 6450–01–P

DEPARTMENT OF ENERGY

Southeastern Power Administration

Jim Woodruff Project Power Rates, Rate Order No. 42

AGENCY: Southeastern Power Administration, DOE.

ACTION: Notice of rate order.

SUMMARY: The Secretary of Department of Energy, confirmed and approved, on an interim basis, Rate Schedules JW–1–G and JW–2–D. The rates were approved on an interim basis through September 19, 2005, and are subject to confirmation and approval by the Federal Energy Regulatory Commission on a final basis.

DATES: Approval of rate on an interim basis is effective through September 19, 2005.

FOR FURTHER INFORMATION CONTACT: Leon Jourolmon, Assistant Administrator, Finance & Marketing, Southeastern Power Administration, Department of Energy, 1166 Athens Tech Road, Elberton, Georgia 30635–6711, (706) 213–3800.

SUPPLEMENTARY INFORMATION: The Federal Energy Regulatory Commission, by Order issued November 9, 2000, in Docket No. EF00–3031–000, confirmed and approved Wholesale Power Rate Schedules JW–1–F and JW–2–C. Rate schedules JW–1–G and JW–2–D replace these schedules.

Dated: July 25, 2002.

Spencer Abraham,

Secretary.

Order Confirming and Approving Power Rates on an Interim Basis

Pursuant to Sections 302(a) and 301(b) of the Department of Energy Organization Act, Public Law 95–91, the functions of the Secretary of the Interior and the Federal Power Commission under Section 5 of the Flood Control Act of 1944, 16 U.S.C. 825s, relating to the Southeastern Power Administration (Southeastern) were transferred to and vested in the Secretary of Energy. By Delegation Order No. 0204–108, effective May 30, 1986, 51 FR 19744 (May 30, 1986) the Secretary of Energy delegated to the Administrator the authority to develop power and transmission rates, and delegated to the Under Secretary the authority to confirm, approve, and place in effect such rates on an interim basis and delegated to the Federal Energy Regulatory Commission (FERC) the authority to confirm and approve on a final basis or to disapprove rates developed by the Administrator under the delegation. On December 6, 2001, the Secretary of Energy issued Delegation Order No. 00–001.00, granting the Deputy Secretary authority to confirm, approve, and place into effect Southeastern's rates on an interim basis. Because there is no Deputy Secretary at the present time, the Secretary of Energy has exercised his authority to confirm, approve, and place into effect on an interim basis the rate schedules in Southeastern Rate Order No. SEPA–42.

Background

Power from the Jim Woodruff Project is presently sold under Wholesale Power Rate Schedules JW–1–F and JW–2–C. These rate schedules were approved by the FERC on November 9, 2000, for a period ending September 19, 2005 (93 FERC 62100).

Public Notice and Comment

Southeastern prepared a Power Repayment Study, dated March of 2002, that showed that revenues at current rates were not adequate to meet repayment criteria. A revised study with a revenue increase of $331,000 produced rates that are adequate to meet repayment criteria. On April 11, 2002, by **Federal Register** Notice 70 FR 17686, Southeastern proposed a rate adjustment of about 5.7 percent to recover this revenue. The notice also announced a Public Information and Comment Forum to be held May 16, 2000, in Tallahassee, Florida, with a deadline for written comments of July 10, 2002. Southeastern received no comments on the proposed rates.

Discussion

System Repayment

An examination of Southeastern's revised system power repayment study, prepared in April 2002, for the Jim Woodruff Project, shows that with the proposed rates, all system power costs are paid within the 50-year repayment period required by existing law and DOE Procedure RA 6120.2. The Administrator of Southeastern has certified that the rates are consistent with applicable law and that they are the lowest possible rates to customers consistent with sound business principles.

Environmental Impact

Southeastern has reviewed the possible environmental impacts of the rate adjustment under consideration and has concluded that, because the adjusted rates would not significantly affect the quality of the human environment within the meaning of the National Environmental Policy Act of 1969, the proposed action is not a major Federal action for which preparation of an Environmental Impact Statement is required.

Availability of Information

Information regarding these rates, including studies, and other supporting materials is available for public review in the offices of Southeastern Power Administration, 1166 Athens Tech Road, Elberton, Georgia 30635–6711.

Submission to the Federal Energy Regulatory Commission

The rates hereinafter confirmed and approved on an interim basis, together with supporting documents, will be submitted promptly to the Federal Energy Regulatory Commission for confirmation and approval on a final basis for a period beginning September 20, 2002, and ending no later than September 19, 2005.

Order

In view of the foregoing and pursuant to the authority delegated to me by the Secretary of Energy, I hereby confirm and approve on an interim basis, effective September 20, 2002, attached Wholesale Power Rate Schedules JW–1–G and JW–2–D. The rate schedules shall remain in effect on an interim basis through September 19, 2005, unless such period is extended or until the FERC confirms and approves them or substitute rate schedules on a final basis.

Dated: July 25, 2002.

Spencer Abraham,

Secretary.

Proposed Wholesale Power Rate Schedule JW–1–G

Availability

This rate schedule shall be available to public bodies and cooperatives served by the Florida Power Corporation and having points of delivery within 150 miles of the Jim Woodruff Project (hereinafter called the Project).

Applicability

This rate schedule shall be applicable to firm power and accompanying energy made available by the Government from the Project and sold in wholesale quantities.

Character of Service

The electric capacity and energy supplied hereunder will be three-phase alternating current at a nominal frequency of 60 cycles per second delivered at the delivery points of the customer.

Monthly Rate

The monthly rate for capacity and energy made available or delivered under this rate schedule shall be:

Demand Charge

$5.79 per kilowatt of monthly contract demand

Energy Charge

16.25 mills per kilowatt hour

Billing Demand

The monthly billing demand for any billing month shall be the lower of (a) the Customer's contract demand or (b) the sum of the maximum 30-minute integrated demands for the month at each of the Customer's points of delivery; provided, that, if an allocation of contract demand to delivery points has become effective, the 30-minute maximum integrated demand for any point of delivery shall not be considered to be greater than the portion of the Customer's contract demand allocated to that point of delivery.

Contract Demand

The contract demand is the amount of capacity in kilowatts stated in the contract which the Government is obligated to supply and the Customer is entitled to receive.

Energy Made Available

During any billing month in which the Government supplies all the Customer's capacity requirements, the Government will make available such when both the Government and the Florida Power Corporation are supplying capacity to a delivery point, each kilowatt of capacity supplied to such point during such month will be considered to be accompanied by an equal quantity of energy.

Billing Month

The billing month for power sold under this schedule shall end at 12 midnight on the 20th day of each calendar month.

Conditions of Service

The customer shall, at its own expense, provide, install, and maintain on its side of each delivery point the equipment necessary to protect and control its own system. In so doing, the installation, adjustment, and setting of all such control and protective equipment at or near the point of delivery shall be coordinated with that which is installed by and at the expense of the Florida Power Corporation on its side of the delivery point.

Service Interruption

When energy delivered to the Customer's system for the account of the Government is reduced or interrupted for one hour or longer, and such reduction or interruption is not due to conditions on the Customer's system or has not been planned and agreed to in advance, the demand charge for the month shall be appropriately reduced.

Proposed Wholesale Power Rate Schedule JW–2–D

Availability

This rate schedule shall be available to the Florida Power Corporation (hereinafter called the Company).

Applicability

This rate schedule shall be applicable to electric energy generated at the Jim Woodruff Project (hereinafter called the Project) and sold to the Company in wholesale quantities.

Points of Delivery

Power sold to the Company by the Government will be delivered at the connection of the Company's transmission system with the Project bus.

Character of Service

Electric power delivered to the Company will be three-phase alternating current at a nominal frequency of 60 cycles per second.

Monthly Rate

The monthly rate for energy sold under this schedule shall be equal to 70 percent of the calculated saving in the cost of fuel per KWH to the Company determined as follows:

$$\text{Energy Rate} = 70\% \times \frac{\text{Fm}}{\text{Sm}} \text{ [Computed to the nearest \$0.00001 } \left(\tfrac{1}{100}\text{ mill}\right) \text{ per KWH]}$$

Where:

Fm = Company fuel cost in the current period as defined in Federal Power Commission Order 517 issued November 13, 1974, Docket No. R–479.

Sm = Company sales in the current period reflecting only losses associated with wholesale sales for resale. Sale shall be equated to the sum of (a) generation, (b) purchases, (c) interchange-in, less (d) inter-system sales, less estimated wholesale losses (based on average transmission loss percentage for preceding calendar year).

Method of Application: The energy rate applied during the current billing month will be based on costs and equated sales for the second month preceding the billing month.

Determination of Energy Sold

Energy will be furnished by the Company to supply any excess of Project use over Project generation. Energy so supplied by the Company will be deducted from the actual deliveries to the Company's system to determine the net deliveries for energy accounting and billing purposes. Energy for Project use shall consist of energy used for station service, lock operation, Project yard, village lighting, and similar uses.

The on-peak hours shall be the hours between 7 a.m. and 11 p.m., Monday through Sunday, inclusive. Off-peak hours shall be all other hours.

All energy made available to the Company shall, to the extent required, be classified as energy transmitted to the Government's preference customers served from the Company's system. All energy made available to the Company from the Project shall be separated on the basis of the metered deliveries to it at the Project during on-peak and off-peak hours, respectively. Deliveries to preference customers of the Government shall be divided on the basis (with allowance for losses) of 77 percent being considered as on-peak energy and 23 percent being off-peak energy. Such percentages may by mutual consent be changed from time to time as further studies show to be appropriate. In the event that in classifying energy there is more than enough on-peak energy available to supply on-peak requirements of the Government's preference customers but less than enough off-peak energy available to supply such customers off-peak requirements, such excess on-peak energy may be applied to the extent necessary to meet off-peak requirements of such customers in lieu of purchasing deficiency energy to meet such off-peak requirements.

Billing Month

The billing month under this schedule shall end at 12 midnight on the 20th day of each calendar month.

Power Factor

The purchaser and seller under this rate schedule agree that they will both so operate their respective systems that neither party will impose an undue reactive burden on the other.

[FR Doc. 02–20063 Filed 8–7–02; 8:45 am]

BILLING CODE 6450–01–P

DEPARTMENT OF ENERGY

Western Area Power Administration

Parker-Davis Project—Extension of Electric Power Resource Commitments by Application of the Energy Planning and Management Program Power Marketing Initiative

AGENCY: Western Area Power Administration, DOE.

ACTION: Notice of proposal.

SUMMARY: The Western Area Power Administration (Western), a Federal power marketing agency of the Department of Energy, announces its Post-2008 re-marketing effort for the Parker-Davis Project (P–DP). Current P–DP long-term, Firm Electric Service (FES) contracts will expire on September 30, 2008. In 1995, Western adopted the Power Marketing Initiative (PMI) in Subpart C of the Energy Planning and Management Program (Program). The Record of Decision for the Program states that application of the PMI will be done on a project-specific basis. If, by means of a public process, Western applies the PMI to the P–DP, the current long-term FES customers of the project would receive an extension of a major portion of the resources available to them at the time their contracts expire. Western now proposes to apply the PMI to the long-term, firm power contracts of the P–DP.

DATES: Western will hold three public information forums on the following dates: 1. September 16, 2002, 1 p.m. to 4 p.m., Las Vegas, Nevada, 2. September 17, 2002, 1 p.m. to 4 p.m., Phoenix, Arizona, 3. September 18, 2002, 1 p.m. to 4 p.m., Ontario, California.

Following the public information forums, Western will hold three public comment forums. The dates for these forums are as follows: 1. October 8, 2002, 1 p.m. to 4 p.m., Las Vegas, Nevada, 2. October 9, 2002, 1 p.m. to 4 p.m., Phoenix, Arizona, 3. October 10, 2002, 1 p.m. to 4 p.m., Ontario, California. Western will accept written comments on or before November 6, 2002.

ADDRESSES: Comments may be submitted to: Mr. J. Tyler Carlson, Western Area Power Administration, Desert Southwest Regional Manager, P.O. Box 6457, Phoenix, AZ 85005–6457. Comments may also be faxed to (602) 352–2490 or e-mailed to *Post2008pdp@wapa.gov.*

The public information and public comment forum locations are:

1. McCarran International Airport, 5th Floor, Commissioner's Meeting Room, Las Vegas, Nevada; 2. Western Area Power Administration, Desert Southwest Regional Office, 615 S. 43rd Ave, Phoenix, Arizona; 3. DoubleTree Ontario Airport, 222 N. Vineyard, Ontario, California.

FOR FURTHER INFORMATION CONTACT: Roy Tinsley, Project Manager, Desert Southwest Region, Western Area Power Administration, 615 S. 43rd Ave., Phoenix, AZ 85005, telephone (602) 352–2788, e-mail *Post2008pdp@wapa.gov.* Program information and the current P–DP marketing plan are available for viewing at *http://www.wapa.gov/dsw/pwrmkt.*

SUPPLEMENTARY INFORMATION: In 1987, Western marketed the long-term, firm power resources of the Parker and Davis dams and entered into 20-year term FES contracts with the current P–DP customers. These FES contracts will expire on September 30, 2008. Western must determine if the PMI, as outlined in the Energy Planning and Management Program (Program), will be applied to the P–DP for FES commitments beyond that date.

Western first proposed the Program on April 19, 1991 (56 FR 16093). The goals of the Program were to encourage efficient energy use by Western's long-term, firm power customers by requiring Integrated Resource Planning and to extend Western's firm power resource commitments. In the final rule of the Program, Western stated that application of the PMI, including the amount of resources extended, would initially apply only to the Pick-Sloan Missouri Basin Program-Eastern Division (P–S) and the Loveland Area Projects (LAP). Applicability to other projects would be determined through future, project-specific public processes. Specific to the P–DP, the rule stated that Western would evaluate application of the PMI to the Parker-Davis Project no more than 10 years before existing contracts expire.

The PMI calls for extending a major portion of existing firm power sales commitments for 20 years beyond the existing termination date. With respect to P–S and LAP, a commitment of not less than 96 percent of the hydroelectric power resource determined to be available to the customers was to be extended, and a power resource pool of up to 4 percent of the power from these customers would be created. In addition, the PMI states that ''at two 5-year intervals after the effective date of the extension to existing customers, Western will create a project-specific resource pool increment of up to an additional 1 percent of the long-term marketable resource under contract at the time.'' The resource pool would be used for allocations to new customers. The rule stated that a more precise decision on how resource pools would be used, as well as the percentage of existing commitments extended, would be determined through future, project-specific public processes.

Consistent with the application of the PMI to other recent Western marketing efforts, Western proposes to apply the PMI (10 CFR parts 905.31 through 905.37), to the P–DP. This includes a proposal to extend 94 percent of the P–DP customers' entitlement of long-term, firm P–DP resources as of September 30, 2008, for an additional 20 years. Given the direction contained within the PMI for a ''reservation of a modest percentage of resources to create a resource pool,'' Western proposes that a resource pool of 6 percent of available P–DP resources be established for new customers. Western proposes creation of a single, one-time resource pool of a definite size, due to the costs and effort associated with incremental resource pools as experienced by the P–S and LAP projects, and given the small size of the proposed P–DP resource pool relative to those of other Western projects. During the most recent marketing effort of the Salt Lake City Area Integrated Projects, which shares many of the same P–DP customers, a single resource pool was created in response to public comments.

The existing P–DP marketing plan defines the marketing area as generally consisting of southern California, southern Nevada, most of Arizona, and a small part of New Mexico; and is more specifically defined in the Conformed General Consolidated Power Marketing Criteria or Regulations for Boulder City Area Projects (49 FR 50582, December 28, 1984). New customers meeting the requirements established in the P–DP Marketing Criteria and qualifying Native American tribes within the P–DP marketing area will be eligible to request an allocation of capacity and energy from the P–DP resource pool. Native American tribes need not have utility status to qualify for an allocation.

Adjustments may be made to resource allocations at any time to reflect changes in dam operations and/or water conditions upon 5 years notification.

As provided in the current P–DP Advancement of Funds contract, new customers will be required to reimburse existing customers for undepreciated replacement advances, to the extent existing customers' allocations are reduced as a result of creating the resource pool. New customers who receive an allocation will also be required to participate in advance funding of Western's and the Bureau of Reclamation's operation and maintenance expenses.

Western is seeking comments regarding the applicability of the PMI to the P–DP, the percentage of resources to be extended to existing customers, and the size of the proposed resource pool. Following the public comment period, Western will analyze the comments received and publish its policy regarding extension of resource commitments in the **Federal Register**.

I. Review Under the Regulatory Flexibility Act

The Regulatory Flexibility Act, 5 U.S.C. 601–621, requires Federal agencies to perform a regulatory flexibility analysis if a final rule is likely to have a significant economic impact on a substantial number of small entities and there is a legal requirement to issue a general notice of proposed rulemaking. Western has determined this action does not require a regulatory flexibility analysis since it is a rulemaking of particular applicability involving rates or services applicable to public property.

II. Small Business Regulatory Enforcement Fairness Act

Western determined this rule is exempt from congressional notification requirements under 5 U.S.C. 801 because the action is a rulemaking of particular applicability relating to rates or services and involves matters of procedure.

III. Determination 12866

DOE has determined that this is not a significant regulatory action because it does not meet the criteria of Executive Order 12866, 58 FR 51735. Western has an exemption from centralized regulatory review under Executive Order 12866; accordingly, this notice requires no clearance by the Office of Management and Budget.

IV. Environmental Compliance

Western has completed an environmental impact statement on the Program, pursuant to the National Environmental Policy Act of 1969 (NEPA). The Record of Decision was published in 60 FR 53181, October 12, 1995. Western's NEPA review assured all environmental effects related to these actions have been analyzed.

Dated: July 26, 2002.

Michael S. Hacskaylo,

Administrator.

[FR Doc. 02–20062 Filed 8–7–02; 8:45 am]

BILLING CODE 6450–01–P

FEDERAL COMMUNICATIONS COMMISSION

Notice of Public Information Collection(s) Being Reviewed by the Federal Communications Commission for Extension Under Delegated Authority, Comments Requested

July 30, 2002.

SUMMARY: The Federal Communications Commission, as part of its continuing effort to reduce paperwork burden invites the general public and other Federal agencies to take this opportunity to comment on the following information collection(s), as required by the Paperwork Reduction Act of 1995, Pub. L. 104–13. An agency may not conduct or sponsor a collection of information unless it displays a currently valid control number. No person shall be subject to any penalty for failing to comply with a collection of information subject to the Paperwork Reduction Act (PRA) that does not display a valid control number. Comments are requested concerning whether the proposed collection of information is necessary for the proper performance of the functions of the Commission, including whether the information shall have practical utility; the accuracy of the Commission's burden estimate; ways to enhance the quality, utility, and clarity of the information collected; and ways to minimize the burden of the collection of information on the respondents, including the use of automated collection techniques or other forms of information technology.

DATES: Persons wishing to comment on this information collection should submit comments October 7, 2002. If you anticipate that you will be submitting comments, but find it difficult to do so within the period of time allowed by this notice, you should advise the contact listed below as soon as possible.

ADDRESSES: Direct all comments to Judy Boley Herman, Federal Communications Commission, 445 12th Street, SW., Room 1–C804, Washington, DC 20554 or via the internet to *jboley@fcc.gov.*

FOR FURTHER INFORMATION CONTACT: For additional information or copies of the information collections contact Judy Boley Herman at 202–418–0214 or via the internet at *jboley@fcc.gov.*

SUPPLEMENTARY INFORMATION: OMB Control No.: 3060–0572.

Title: Filing Manual for Annual International Circuit Status Reports.

Form No.: N/A.

Type of Review: Extension of a currently approved collection.

Respondents: Business or other for-profit.

Number of Respondents: 138.

Estimated Time Per Response: 11 hours.

Frequency of Response: Annual reporting requirement.

Total Annual Burden: 1,540 hours.

Annual Reporting and Recordkeeping Cost Burden: N/A.

Needs and Uses: The information will enable the Commission to discharge its obligation to authorize the construction and use of international common carrier transmission facilities. The information will be used by the Commission and the industry as to whether an international common carrier is providing direct or indirect service to countries and to assess industry trends in the use of international transmission facilities. The information is extremely valuable because it not available from any other source.

Federal Communications Commission.

Marlene H. Dortch,

Secretary.

[FR Doc. 02–20028 Filed 8–7–02; 8:45 am]

BILLING CODE 6712–01–P

FEDERAL COMMUNICATIONS COMMISSION

[CC Docket No. 01–92, DA 02–1740]

Routing and Rating of Traffic by Incumbent Local Exchange Carriers (ILECs)

AGENCY: Federal Communications Commission.

ACTION: Notice; solicitation of comments.

SUMMARY: In a public notice in this proceeding released on July 18, 2002, the Wireline Competition Bureau sought comment on the Sprint Petition for Declaratory Ruling regarding the routing and rating of traffic by ILECs and on BellSouth's opposition to the petition, including the appropriate intercarrier compensation applicable to this traffic, both under our existing rules and prospectively.

DATES: Comments due August 8, 2002 and reply comments due August 19, 2002.

ADDRESSES: Federal Communications Commission, 445 12th St., SW., Washington, DC 20554. See **SUPPLEMENTARY INFORMATION** section for where and how to file comments.

FOR FURTHER INFORMATION CONTACT: Steve Morris or Victoria Schlesinger, Pricing Policy Division, Wireline Competition Bureau, (202) 418–1530, or Gregory Vadas, Policy Division, Wireless Telecommunications Bureau, (202) 418–1798.

SUPPLEMENTARY INFORMATION: On May 9, 2002, Sprint Corporation (Sprint), on behalf of its wireless division, filed a petition for declaratory ruling seeking confirmation that: (1) An incumbent local exchange carrier (ILEC) may not refuse to load telephone numbering resources of an interconnecting carrier, and (2) an ILEC may not refuse to honor the routing and rating points designated by that interconnecting carrier. Sprint's concern is its contention that, in certain circumstances, BellSouth has signaled its intention to refuse to program its LATA tandem switches with Sprint's NPA–NXXs. In particular, where Sprint wishes to associate an NPA–NXX with a rate center of an ILEC other than BellSouth, and the rating and routing points are different (*e.g.,* the routing point could be Sprint's MSC, but the rating point would be an independent ILEC's rate center), Sprint contends that BellSouth's position is to refuse to load its LATA tandem switch with Sprint's call routing and rating information. On May 22, 2002, BellSouth filed an opposition to the Sprint Petition stating that it is currently loading NPA–NXXs that Sprint acquires and that it is not currently adversely affecting the routing of any Sprint traffic. In its opposition, BellSouth states that it believes that the rating and routing arrangements described above result in inappropriate intercarrier compensation, claiming that ''[v]arious forms of intercarrier compensation, including reciprocal compensation, access charges, and inter-company settlements could apply to this traffic.'' We seek comment on the practices and issues raised in Sprint's petition and BellSouth's opposition, including the appropriate intercarrier compensation applicable to the traffic described above, both under our existing rules and prospectively.

Sprint's Petition and BellSouth's Opposition raise interconnection and intercarrier compensation issues under consideration in CC Docket No. 01–92, *Developing a Unified Intercarrier Compensation Regime*, 66 FR 28410, May 23, 2001. Accordingly, we ask that parties file their pleadings in CC Docket No. 01–92. The petition and other pleadings will be incorporated into CC Docket No. 01–92.

Pursuant to sections 1.415 and 1.419 of the Commission's rules, interested parties may file comments on or before August 8, 2002, and reply comments on or before August 19, 2002. Comments may be filed using the Commission's Electronic Comment Filing System (ECFS) or by filing paper copies. Comments filed through the ECFS can be sent as an electronic file via the Internet to *http://www.fcc.gov/e-file/ecfs.html.* Generally, only one copy of an electronic submission must be filed. If multiple docket or rulemaking numbers appear in the caption of this proceeding, however, commenters must transmit one electronic copy of the filing to each docket or rulemaking number referenced in the caption. In completing the transmittal screen, commenters should include their full name, Postal Service mailing address, and the applicable docket or rulemaking number. Parties may also submit an electronic copy by Internet e-mail. To get filing instructions for e-mail comments, commenters should send an e-mail to *ecfs@fcc.gov*, and should include the following words in the body of the message: ''get form <your email address>.'' A sample form and directions will be sent in reply. Commenters also may obtain a copy of the ASCII Electronic Transmittal Form (FORM–ET) at *http://www.fcc.gov/e-file/email.html.* Parties who choose to file by paper must file an original and four copies of each filing. If more than one docket or rulemaking number appears in the caption of this proceeding, commenters must submit two additional copies for each additional docket or rulemaking number. Filings can be sent by hand or messenger delivery, by commercial overnight courier, or by first-class or overnight U.S. Postal Service mail (although we continue to experience delays in receiving U.S. Postal Service mail). The Commission's contractor, Vistronix, Inc., will receive hand-delivered or messenger-delivered paper filings for the Commission's Secretary at 236 Massachusetts Avenue, NE., Suite 110, Washington, DC 20002. The filing hours at this location are 8 a.m. to 7 p.m. All hand deliveries must be held together with rubber bands or fasteners. Any envelopes must be disposed of before entering the building. Commercial overnight mail (other than U.S. Postal Service Express Mail and Priority Mail) must be sent to 9300 East Hampton Drive, Capitol Heights, MD 20743. U.S. Postal Service first-class mail, Express Mail, and Priority Mail should be addressed to 445 12th Street, SW., Washington, DC 20554. All filings must be addressed to the Commission's Secretary, Office of the Secretary, Federal Communications Commission. Regardless of whether parties choose to file electronically or by paper, parties should also file one copy of any documents filed in this docket with the Commission's copy contractor, Qualex International, Portals II, 445 12th Street SW., CY–B402, Washington, DC 20554 (telephone 202–863–2893; facsimile 202–863–2898) or via e-mail at *qualexint@aol.com.* In addition, one copy of each submission must be filed with the Chief, Pricing Policy Division, Wireline Competition Bureau, and Chief, Policy Division, Wireless Telecommunications Bureau, 445 12th Street, SW., Washington, DC 20554. Documents filed in this proceeding will be available for public inspection during regular business hours in the Commission's Reference Information Center, 445 12th Street, SW., Washington, DC 20554, and will be placed on the Commission's Internet site.

This proceeding will be governed by ''permit-but-disclose'' *ex parte* procedures that are applicable to non-restricted proceedings under section 1.1206 of the Commission's rules. Parties making oral *ex parte* presentations are reminded that memoranda summarizing the presentation must contain a summary of the substance of the presentation and not merely a listing of the subjects discussed. More than a one-or two-sentence description of the views and arguments presented generally is required. Other rules pertaining to oral and written presentations are set forth in section 1.1206(b) as well. In addition, interested parties are to file any written *ex parte* presentations in this proceeding with the Commission's Secretary, Marlene H. Dortch, 445 12th Street, SW., TW–B204, Washington, DC 20554, and serve with three copies each: Pricing Policy Division, Wireline Competition Bureau, Attn: Victoria Schlesinger, and Policy Division, Wireless Telecommunications Bureau, Attn: Gregory Vadas, 445 12th Street, SW., Washington, DC 20554. Parties shall also serve with one copy: Qualex International, Portals II, 445 12th Street, SW., Room CY–B402, Washington, DC 20554, (202) 863–2893.

Federal Communications Commission.

Deena Shetler,

Deputy Division Chief, Pricing Policy Division.

[FR Doc. 02–20176 Filed 8–7–02; 8:45 am]

BILLING CODE 6712–01–P

FEDERAL ELECTION COMMISSION.

Sunshine Act Notices

AGENCY: Federal Election Commission.

DATE & TIME: *Tuesday, August 13, 2002 at 10 A.M.*

PLACE: 999 E Street, NW., Washington, DC.

STATUS: This meeting will be closed to the public.

ITEMS TO BE DISCUSSED:

Compliance matters pursuant to 2 U.S.C. 437g.

Audits conducted pursuant to 2 U.S.C. 437g, 438(b), and Title 26, U.S.C.

Matters concerning participation in civil actions or proceedings or arbitration.

Internal personnel rules and procedures or matters affecting a particular employee.

DATE & TIME: *Thursday, August 15, 2002 at 10 A.M.*

PLACE: 999 E Street, NW., Washington, DC (NINTH FLOOR).

STATUS: This meeting will be closed to the public.

ITEMS TO BE DISCUSSED:

Correction and Approval of Minutes.

Notice of Proposed Rulemaking on Contribution Limitations and Prohibitions.

Administrative Matters.

PERSON TO CONTACT FOR INFORMATION: Mr. Ron Harris, Press Officer, Telephone: (202) 694–1220.

Mary W. Dove,

Secretary of the Commission.

[FR Doc. 02–20210 Filed 8–6–02; 12:13 pm]

BILLING CODE 6715–01–M

FEDERAL RESERVE SYSTEM

Change in Bank Control Notices; Acquisition of Shares of Bank or Bank Holding Companies

The notificants listed below have applied under the Change in Bank Control Act (12 U.S.C. 1817(j)) and § 225.41 of the Board's Regulation Y (12 CFR 225.41) to acquire a bank or bank holding company. The factors that are considered in acting on the notices are set forth in paragraph 7 of the Act (12 U.S.C. 1817(j)(7)).

The notices are available for immediate inspection at the Federal Reserve Bank indicated. The notices also will be available for inspection at the office of the Board of Governors. Interested persons may express their views in writing to the Reserve Bank indicated for that notice or to the offices of the Board of Governors. Comments must be received not later than August 23, 2002.

A. Federal Reserve Bank of Minneapolis (Julie Stackhouse, Vice President) 90 Hennepin Avenue, Minneapolis, Minnesota 55480–0291:

1. Jerry E. Gerber, Rice Lake, Wisconsin; Terry G. Gerber, Cameron, Wisconsin; Susan J. Gerber, Blaine, Minnesota; Ernest J. Gerber, Bruce, Wisconsin; Alan F. Gerber, Radisson, Wisconsin; Kathleen L. Gerber, Quincy, Massachusetts; and Holly A. Barnes, Hayward, Wisconsin, to acquire voting shares of Old Murry Bancorp, Inc., Cameron, Wisconsin, and thereby indirectly acquire voting shares of Owen-Curtiss Financial Corporation, Rice Lake, Wisconsin, Brill Bancshares, Inc., Rice Lake, Wisconsin, Brill State Bank, Rice Lake, Wisconsin, and Gilman Corporation, Gilman, Wisconsin, and State Bank of Gilman, Gilman, Wisconsin.

2. Marcelle McVay, Chicago, Illinois, to retain voting shares of Minnwest Corporation, Minnetonka, Minnesota, and thereby indirectly retain voting shares of Minnwest Bank Luverne, Luverne, Minnesota; Minnwest Bank Central, Montevideo, Minnesota; Minnwest Bank Ortonville, Ortonville, Minnesota; Minnwest Bank, M.V., Redwood Falls, Minnesota; Minnwest Bank South, Tracy, Minnesota; and Minnwest Bank Sioux Falls, Sioux Falls, South Dakota.

3. Kenneth D. and Suzanne M. Roeder, De Smet, South Dakota, to acquire voting shares of Kingsbury Bank Holding Company, De Smet, South Dakota, and thereby indirectly acquire voting shares of Peoples State Bank, De Smet, South Dakota.

Board of Governors of the Federal Reserve System, August 5, 2002.

Robert deV. Frierson,

Deputy Secretary of the Board.

[FR Doc. 02–20087 Filed 8–7–02; 8:45 am]

BILLING CODE 6210–01–S

FEDERAL RESERVE SYSTEM

Formations of, Acquisitions by, and Mergers of Bank Holding Companies

The companies listed in this notice have applied to the Board for approval, pursuant to the Bank Holding Company Act of 1956 (12 U.S.C. 1841 *et seq.*) (BHC Act), Regulation Y (12 CFR Part 225), and all other applicable statutes and regulations to become a bank holding company and/or to acquire the assets or the ownership of, control of, or the power to vote shares of a bank or bank holding company and all of the banks and nonbanking companies owned by the bank holding company, including the companies listed below.

The applications listed below, as well as other related filings required by the Board, are available for immediate inspection at the Federal Reserve Bank indicated. The application also will be available for inspection at the offices of the Board of Governors. Interested persons may express their views in writing on the standards enumerated in the BHC Act (12 U.S.C. 1842(c)). If the proposal also involves the acquisition of a nonbanking company, the review also includes whether the acquisition of the nonbanking company complies with the standards in section 4 of the BHC Act (12 U.S.C. 1843). Unless otherwise noted, nonbanking activities will be conducted throughout the United States. Additional information on all bank holding companies may be obtained from the National Information Center website at www.ffiec.gov/nic/.

Unless otherwise noted, comments regarding each of these applications must be received at the Reserve Bank indicated or the offices of the Board of Governors not later than September 3, 2002.

A. Federal Reserve Bank of St. Louis (Randall C. Sumner, Vice President) 411 Locust Street, St. Louis, Missouri 63166–2034:

1. Linn Holding Company, Linn, Missouri; to acquire 100 percent of the voting shares of South Gasconade Investment Corporation, Owensville, Missouri, and thereby indirectly acquire voting shares of Charter 1 Bank, Owensville, Missouri.

2. Planters Financial Group, Inc., Hopkinsville, Kentucky; to acquire 100 percent of the voting shares of City State Bank, Martin, Tennessee.

B. Federal Reserve Bank of Minneapolis (Julie Stackhouse, Vice President) 90 Hennepin Avenue, Minneapolis, Minnesota 55480–0291:

1. First Sleepy Eye Bancorporation, Inc., Sioux Falls, South Dakota; to acquire 96 percent of the voting shares of Stearns Bank Canby National Association, Canby, Minnesota.

Board of Governors of the Federal Reserve System, August 5, 2002.

Robert deV. Frierson,

Deputy Secretary of the Board.

[FR Doc. 02–20088 Filed 8–7–02; 8:45 am]

BILLING CODE 6210–01–S

FEDERAL RETIREMENT THRIFT INVESTMENT BOARD

Sunshine Act Notice

TIME AND DATE: 10 a.m. (EDT) August 19, 2002.

PLACE: 4th Floor, Conference Room, 1250 H Street, NW., Washington, DC.

STATUS: Parts will be open to the public and part closed to the public.

Matters To Be Considered

Parts Open to the Public

1. Approval of the minutes of the July 15, 2002, Board member meeting.
2. Thrift Savings Plan activity report by the Executive Director (with discussion of litigation to be closed to the public).
3. Review of investment policy.
4. Review of Ernst & Young semiannual financial review.

Part Closed to the Public

Discussion of litigation.

CONTACT PERSON FOR MORE INFORMATION: Thomas J. Trabucco, Director, Office of External Affairs, (202) 942–1640.

Dated: August 6, 2002.

Elizabeth S. Woodruff,

Secretary to the Board, Federal Retirement Thrift Investment Board.

[FR Doc. 02–20263 Filed 8–6–02; 3:33 pm]

BILLING CODE 6760–01–M

DEPARTMENT OF HEALTH AND HUMAN SERVICES

Office of the Secretary

Notice of Interest Rate on Overdue Debts

Section 30.13 of the Department of Health and Human Services' claims collection regulations (45 CFR part 30) provides that the Secretary shall charge an annual rate of interest as fixed by the Secretary of the Treasury after taking into consideration private consumer rates of interest prevailing on the date that HHS become entitled to recovery. The rate generally cannot be lower than the Department of Treasury's current value of funds rate or the applicable rates determined from the ''Schedule of Certified Interest Rates with Range of Maturities.'' This rate may be revised quarterly by the Secretary of the Treasury and shall be published quarterly by the Department of Health and Human Services in the **Federal Register.**

The Secretary of the Treasury has certified a rate of 12⅝% for the quarter ended June 30, 2002. This interest rate will remain in effect until such time as the Secretary of the Treasury notifies HHS of any change.

Dated: July 31, 2002.

George Strader,

Deputy Assistant Secretary, Finance

[FR Doc. 02–20020 Filed 8–7–02; 8:45 am]

BILLING CODE 4150–04–M

DEPARTMENT OF HEALTH AND HUMAN SERVICES

Centers for Disease Control and Prevention

National Task Force on Fetal Alcohol Syndrome and Fetal Alcohol Effect: Meeting

In accordance with section 10(a)(2) of the Federal Advisory Committee Act (Pub. L. 92–463), the Centers for Disease Control and Prevention (CDC) announces the following Federal advisory committee meeting.

Name: National Task Force on Fetal Alcohol Syndrome and Fetal Alcohol Effect (NTFFASFAE).

Times and Dates:

8:30 a.m.–4:30 p.m., September 20, 2002.

8:30 a.m.–12 noon, September 21, 2002.

Place: Hyatt Regency, 265 Peachtree Street, N.E., Atlanta, Georgia 30303, telephone 404/577–1234, fax 404/588–3752.

Status: Open to the public, limited only by the space available. The meeting room accommodates approximately 65 people.

Purpose: The Secretary is authorized by the Public Health Service Act, section 399H, (42 U.S.C. 280f, as added by Public Law 105–392) to establish a National Task Force on Fetal Alcohol Syndrome and Fetal Alcohol Effect to: (1) Foster coordination among all governmental agencies, academic bodies and community groups that conduct or support Fetal Alcohol Syndrome (FAS) and Fetal Alcohol Effect (FAE) research, programs and surveillance; and (2) to otherwise meet the general needs of populations actually or potentially impacted by FAS and FAE.

Matters To Be Discussed: Discussions will focus on ways the Task Force can collaborate with CDC and other Federal agencies on issues of diagnostic criteria for FAS/Alcohol Related Neurodevelopmental Disorder (ARND) in order to enhance health care providers' recognition of these disorders, and to ensure that those affected and their families receive needed services; the special needs of birth mothers of children with FAS/ARND; a report of the Substance Abuse and Mental Health Services Administration FAS/FAE Center for Excellence on their initial ''stakeholders'' meetings and future plans; an update on activities from the Interagency Coordinating Committee on Fetal Alcohol Syndrome; new research and program updates from the CDC; and a discussion of the implementation of the Task Force recommendations by various governmental agencies. Additional agenda items include: Working group updates; discussion of future topics, and scheduling the next meeting.

Agenda items are subject to change as priorities dictate.

Contact Person for More Information: R. Louise Floyd, DSN, RN, Designated Federal Official, National Center on Birth Defects and Developmental Disabilities, CDC, 4700 Buford Highway, NE, (F–49), Atlanta, Georgia 30333, telephone 770/488–7372, fax 770/488–7361.

The Director, Management Analysis and Services Office, has been delegated the authority to sign **Federal Register** notices pertaining to announcements of meetings and other committee management activities for both the CDC and ATSDR.

Dated: August 2, 2002.

John Burckhardt,

Acting Director, Management Analysis and Services Office, , Centers for Disease Control and Prevention.

[FR Doc. 02–20037 Filed 8–7–02; 8:45 am]

BILLING CODE 4163–18–P

DEPARTMENT OF HEALTH AND HUMAN SERVICES

Centers for Disease Control and Prevention

Prospective Grant of Exclusive License: Various Retrovirus Isolated From Humans

AGENCY: Technology Transfer Office, Centers for Disease Control and Prevention (CDC), Department of Health and Human Services.

ACTION: Notice.

SUMMARY: This is a notice in accordance with 35 U.S.C. 209 (e)and 37 CFR 404.7(a)(1)(i) that the Centers for Disease Control and Prevention (CDC), Technology Transfer Office, Department of Health and Human Services (DHHS), is contemplating the grant of a worldwide exclusive license to practice the inventions embodied in the patents and patent applications referred to below to Antibody Systems, Inc., located in Hurst, Texas. The patent rights in these inventions have been assigned to the government of the United States of America. The patents and patent applications to be licensed are:

Title: Retrovirus Isolated from Humans, U.S. Patent No. 5,882,912. Issue Date: 03/16/99. CDC Reference No. I–012–97/0; New Spumavirus Isolated form Humans, U.S. Patent Application PCT/US98/02598 dated 2/12/98. CDC Reference No. I–012–97/1; Spumavirus

Isolated from Humans, U.S. Patent Application 09/367,213 dated 12/08/1999. CDC Reference No. I–012–97/2; New Retrovirus Isolated from Humans, U.S. Patent Application PCT/US01/51411 dated 10.19.2001. CDC Reference No. I–023–00/0 Spumavirus Isolated from Humans, U.S. Patent Application PCT/US99/25171 dated 10/27/99. CDC Reference No. I–034–97/0; Spumavirus Isolated from Humans, U.S. Patent Application Serial No. 09/830,616 filed 9/05/01. CDC Reference No. I–034–97/1;

The prospective exclusive license will be royalty-bearing and will comply with the terms and conditions of 35 U.S.C. 209 and 37 CFR 404.7.

These inventions cover unique spumavirus isolates and clones from infected humans, and an infectious spumavirus vector. Licensee will further development this technology to assess this vector's suitability for gene therapy applications, attenuated vaccines, and use as a stable replicating viral vector.

ADDRESSES: Requests for a copy of the patent applications, inquiries, comments, and other materials relating to the contemplated license should be directed to Andrew Watkins, Director, Technology Transfer Office, Centers for Disease Control and Prevention (CDC), 4770 Buford Highway, Mailstop K–79, Atlanta, GA 30341, telephone: (770) 488–8600; facsimile: (770) 488–8615. Applications for a license filed in response to this notice will be treated as objections to the grant of the contemplated license. Only written comments and/or applications for a license which are received by CDC within sixty days of this notice will be considered. Comments and objections submitted in response to this notice will not be made available for public inspection, and, to the extent permitted by law, will not be released under the Freedom of Information Act, 5 U.S.C. 552. A signed Confidential Disclosure Agreement will be required to receive a copy of any pending patent application.

Dated: August 2, 2002.

Joseph R. Carter,

Associate Director for Management and Operations, Centers for Disease Control and Prevention (CDC).

[FR Doc. 02–20039 Filed 8–7–02; 8:45 am]

BILLING CODE 4163–18–P

DEPARTMENT OF HEALTH AND HUMAN SERVICES

Centers for Disease Control and Prevention

National Health and Nutrition Examination Survey III (NHANES) DNA Specimens: Guidelines for Proposals to Use Samples and Proposed Cost Schedule

ACTION: Notice.

SUMMARY: The National Health and Nutrition Examination Survey (NHANES) is a program of periodic surveys conducted by the National Center for Health Statistics (NCHS) of the Centers for Disease Control and Prevention (CDC). Examination surveys conducted since 1960 by NCHS have provided national estimates of the health and nutritional status of the U.S. civilian non-institutionalized population. To add to the large amount of information collected for the purpose of describing the health of the population, blood lymphocytes were collected in NHANES III in anticipation of advances in genetic research.

The lymphocytes have been stored and maintained at the Division of Laboratory Sciences (DLS) at the National Center for Environmental Health (NCEH), CDC. The collection of lymphocytes was begun in the second phase of the survey (1991–1994) because of the significant advances in the rapidly evolving field of molecular biology that were occurring during the planning phase of this survey. CDC is making DNA samples from these specimens available to the research community for such analyses. Specimens are available from approximately 7,300 participants in the second phase of NHANES III. No cell lines will be made available.

This program has been previously announced (Tuesday, June 1, 1999 (64 FR 29321)). The purpose of this notice is to announce a third category for proposals for use of these specimens and a new cost schedule. For final proposal guidelines and request for letters of intent, please contact Ms. Oraegbu or go to *http://www.cdc.gov/nchs/about/major/nhanes/dnafnlgm2.htm*.

All interested researchers are encouraged to submit letters of intent. Approximately twenty proposals for a full set of specimens (~7,300 samples) and a limited number of proposals (less than five, depending on the number of specimens requested) for smaller sets of samples can be awarded in this solicitation. No funding is provided as part of this solicitation. Proposals will be reviewed by a technical panel. Approved projects that do not obtain funding on their own will be canceled. A more complete description of this program follows.

Dates

- Letter of Intent Receipt: September 9, 2002
- Submission of Proposals: October 7, 2002
- Application Receipt: November 18, 2002
- Scientific Review: January, 2003
- Institutional Review: February, 2003
- Notification of approval: March 2003
- Anticipated distribution of samples: July-August 2003

ADDRESSES: To send comments and for information, contact:

Ms. Kika Oraegbu, Division of Health Examination Statistics, National Center for Health Statistics, Centers for Disease Control and Prevention, 6525 Belcrest Road, Room 1000, Hyattsville, MD 20782, Phone: 301–458–4367, FAX: 301–458–4028, E-Mail: KDO1@cdc.gov, Internet: *http://www.cdc.gov/nchs/about/major/nhanes/dnafnlgm2.htm.*

SUPPLEMENTARY INFORMATION:

The goals of NHANES are (1) to estimate the number and percentage of people in the U.S. population and designated subgroups with selected diseases and risk factors for those diseases; (2) to monitor trends in the prevalence, awareness, treatment and control of selected diseases; (3) to monitor trends in risk behaviors and environmental exposures; (4) to analyze risk factors for selected diseases; (5) to study the relation among diet, nutrition and health; (6) to explore emerging public health issues and new technologies; (7) to establish and maintain a national probability sample of baseline information on health and nutrition status.

The Third National Health and Nutrition Examination Survey (NHANES III) began in the Fall of 1988 and ended in the Fall of 1994. Survey data were collected and can be analyzed from two phases: Phase I was conducted from October 1988 to October 1991, and Phase II was conducted from October 1991 to October 1994. Both phases are nationally representative samples. For details of the sampling design see the Plan and Operation of NHANES III (1). This information can be obtained by contacting the Data Dissemination Branch, NCHS, at 301–458–4636 or from the Internet at *http://www.cdc.gov/nchs/about/major/nhanes/nh3data.htm.*

Blood specimens were collected from participants as a part of NHANES III. Lymphocytes were isolated from the blood collected from participants aged 12 years and older and stored frozen in liquid nitrogen or as cell cultures immortalized with Epstein-Barr virus and frozen at the Molecular Biology Branch of DLS, NCEH, CDC, Atlanta, GA. DNA is available from cell lines of Phase II (1991–1994) participants.

Health information collected in the NHANES III is kept in strictest confidence. During the informed consent process, survey participants are assured that data collected will be used only for stated purposes and will not be disclosed or released to others without the consent of the individual or the establishment in accordance with section 308(d) of the Public Health Service Act (42 U.S.C. 242m). Although the consent form was signed by participants in the survey, and participants consented to storing specimens of their blood for future research, specific mention of genetic research was not included. Nevertheless, given the scientific importance of this resource, the CDC/NCHS Institutional Review Board (IRB) approved making anonymized samples of DNA available to the genetic research community.

The anonymization requirements proved to be restrictive and difficult to implement, therefore, in August, 2001 the CDC/NCHS IRB approved a revised plan for using these specimens based on the guidelines in the August, 1999 National Bioethics Advisory Commission (NBAC) report on the use of stored biological materials for research. This revised plan includes a process that gives researchers the ability to obtain more information associated with specimens for protocols that are determined by the IRB to have minimal risk for harm to the participant. For those protocols that cannot be conducted under unlinked (or anonymous) conditions, but have been determined to involve minimal risk, the revised plan allows for linking the genetic laboratory results to the NHANES data through the NCHS Research Data Center. This process would ensure that confidentiality of the subjects' identity is maintained, and would reduce the possibility that linking genetic information to the NHANES III data files might identify an individual or cause group harm.

Potential Research Proposals

Category (A): Special studies using the NCHS Research Data Center: Complete set of samples in deep-well format (96 specimens/per plate) ~7,300 samples. Studies which request DNA samples linked to previously collected NHANES III public use data without the restriction of anonymization. Data analyses must be done within the NCHS Research Data Center.

Category (B): Age-race-sex studies using anonymized samples: A limited number of subsets may be distributed in 50uL cryovials. Subsets based on the selection criteria proposed by investigators. Studies of allele frequencies which require only basic demographic information (age, race/ethnicity, and sex) to be linked to the samples.

Category (C): Special anonymized studies: A limited number of subsets may be distributed in 50uL cryovials. Subsets based on the selection criteria proposed by investigators. Studies in which additional co-variates from the NHANES III public use database are required, but the re-coding maintains anonymization (minimum of 5 individuals in each statistical cell) of the samples.

These latter two research designs do not differ from the previous Plan for distributing NHANES III DNA samples to researchers.

Category (A): Special studies using the NCHS Research Data Center—Distribution of the complete set of samples in deep-well format (96 specimens/per plate) ~7,300 samples. The investigator will specify the genetic analyses to be conducted on the samples. The investigator will also include in the research protocol application a list of demographic and clinical variables that would be used for the data analyses. Data analyses that combine the genetic analyses with NHANES III data must be conducted in the NCHS Research Data Center (RDC). The researcher will conduct the genetic laboratory analyses on the samples that are labeled with a unique random ID and are, therefore, anonymous to the researcher. To perform the data analyses, the researcher will then provide the results of the genetic laboratory tests with the random identification numbers to the Division of Health Examination Statistics (DHES). The random identification numbers are also anonymous to all staff, except the one person who has the crosswalk file. These results will be matched to the NHANES III data by that person. The resulting data file will be provided to the RDC. These analyses will be subject to all the confidentiality restrictions of the RDC (http://www.cdc.gov/nchs/r&d/rdc.htm). Because all the data analyses will be completed in the NCHS RDC, which charges for computer time and for RDC support time, it is recommended that the investigator develop the project proposal in conjunction with the NHANES Staff and Research Data Center staff. The investigator should perform preliminary analyses using NHANES public use data to determine whether the proposed research is feasible. Approval of these protocols by the RDC is required after approval by the Genetics Technical Panel. The RDC uses the following criteria for approval: risk of disclosure, consistency with the mission of NCHS, availability of RDC resources, and the feasibility of the project.

Although researchers sign confidentiality agreements to use the RDC, strict confidentiality protocols require that researchers with approved projects must complete their work using the facilities located within the Research Data Centers (currently only the Hyattsville, MD, facility is in operation). Two access methods are available for researchers to accomplish their tasks: onsite and remote. The costs and restrictions are different for each method. Onsite researchers have the ability to use the full capabilities of the SAS system with the only additional requirement being a disclosure review. Individual cells are suppressed if the minimum requirements for disclosure are not met. Additional restrictions limit the analysis capabilities of the remote access system. Under these situations, the printed output is scanned and screened prior to transmittal to the investigator. Strict minimal disclosure limits are adhered to and data items are suppressed if the minimums are not met. For remote access, all statistical cells with fewer than five observations are suppressed. Under the RDC option (protocol category A), the researcher may obtain aggregate statistics from statistical calculations which effectively use smaller statistical cell sizes for intermediate steps, such as performing regression analyses on detailed data, as long as the intermediate steps are never made available separately.

Category (B) Age-race-gender Studies: A limited number of subsets may be distributed in 50uL cryovials. Subsets based on the selection criteria proposed by investigators. To facilitate the research proposal preparation of allele frequency, NCHS will make the following data available with the DNA sample: age in 10-year age groups, race-ethnicity (white, black, Mexican-American), gender, mean sample weights for each demographic group and the average design effect. Thus, investigators wishing to submit proposals under this research design type do not need to provide an analysis

of NHANES III data to support the unlinked (anonymization) scheme proposed. These data have sufficient sample sizes in each category (the smallest age, race/ethnicity, gender statistical cell contains 62 persons) to preserve anonymity. To further preserve anonymity, only 80 percent of the subjects in each statistical cell will be used.

Proposals submitted for this category of review are limited to those requesting samples from within these age, gender, race/ethnicity cells for identifying the frequency of the alleles in the population. These proposals must address all criteria except for the verification that anonymization can be achieved.

Category (C): Special Anonymized Studies (Requests for Additional Variables)—A limited number of subsets may be distributed in 50uL aliquots in cryovials. Subsets are based on the selection criteria proposed by the investigator(s). The investigator will include a list of demographic and clinical variables and specify recoding schemes, if appropriate, that the principal investigator would like to have linked to the samples to meet the objectives of the study. The combined information on all variables provided to the investigator by CDC *must not* constitute a unique set of values that could link the samples with participant data on the NHANES III public use data set. Investigators should obtain the NHANES III Public Use Data and should verify that anonymity can be achieved before submitting the proposal with the requested set of variables.

A cross tabulation of all requested variables must be provided and must demonstrate that there are at least five individuals in each statistical cell of that cross tabulation. Recoding is required for continuous variables and may be required for integral variables to ensure anonymity. Because the samples are primarily available from phase II subjects, these analyses should be run using phase II subjects only (SDPPHASE=2). (Household codes are confidential data. Therefore, if only one individual per household is to be included in the protocol, the investigator can estimate the sample size per statistical cell by halving the cross tabulation results. For instance, if only one individual per household is requested, the minimum statistical cell size of the cross tabulation should be ten subjects.) From each statistical cell, either 2 or 20 percent of the subjects of the cell, whichever is larger, will be deleted from the pool of samples sent to the investigator. In all three proposal designs, the investigators will receive samples that are coded with a random identifier that is unique to that proposal.

DNA Samples

For proposals falling into category A, the laboratory will dilute the stock specimens that are currently in deep-well plates 1:2 and distribute 50 ul aliquots of diluted lysate. The amount of DNA in each aliquot will be approximately 180–1,500 nanograms (ng). Aliquots will be dispensed into deep-well plates for distribution to investigators. Each well will be bar-coded and labeled with a readable identifier. Approximately 20–22 sample sets of specimens from 7,300 participants will be available for proposals. An investigator must purchase the samples in full sets. For proposals falling into category B or C, specimens will be distributed in 50 µL aliquots in cryovials rather than deep-well plates. The amount of DNA in each aliquot will be 75 to 650 nanograms. Only a limited number of smaller specialized sets for category B or C are available. There are only 3 complete sets of cryovials, so the number of projects that can be filled with these samples depends on the types of projects proposed.

Proposed Cost Schedule for Providing NHANES III DNA Specimen Bank

A nominal processing fee of $5.00 is charged for each sample received from the NHANES III DNA Specimen Bank if the full set of specimens (category A) are requested. If the more limited set of cryovials is requested, a cost of $38.00/vial is assessed to cover the manual selection of these samples. Costs are determined both for NCEH and NCHS and include the physical materials needed to process the samples at the NCEH laboratory, as well as the materials to process the requests for samples at NCHS. These costs include salaries of the staff needed to conduct these activities at each Center. The fee is estimated to cover the costs of processing, handling, and preparing the samples in accordance with the detailed requirements of the investigators. These costs were based on an assumption that NCEH and NCHS will receive and process 20 proposals in a year, each requesting 7,300 samples as shown in the table below or 5 subsets of 1000 samples in cryovials.

The materials listed are for the recurring laboratory costs to dispense and prepare the samples for shipping. Labor costs are based on the need for microbiologists, a proposal administrator, and computer programmers for NCHS and NCEH to maintain the data bases and verify anonymity. Technical panel travel and expenses are based on the panel meeting twice a year. The space estimate is based on acquiring storage and sample aliquoting space in the laboratory.

Total costs	Per sample for 7,300 samples in 96 well plates	Per sample for individual cryovials
Materials	$ 0.25	$ 1.90
Labor	2.90	22.00
Application review and other administrative expenses	0.35	2.69
Space	0.13	0.97
Subtotal	3.63	27.56
NCHS overhead (15%)	0.54	4.12
Subtotal	4.17	31.68
CDC/FMO overhead (20%)	0.83	6.32
Total cost per sample	5.00	38.00
Total cost per proposal	36,500	NA

Shipping costs are not included in the processing fee. These costs must also be paid by the investigator.

Procedures for Letter of Intent

NCHS will post information about letters of intent on the NHANES Web site *www.cdc.gov/nchs/about/major/nhanes/nhanes.htm,* by September 9, 2002. The letter of intent is required to enable CDC to plan the review more efficiently, evaluate the number of requests, and to assess the capacity of the DNA Bank to fulfill requests. Only

20–22 full sets of samples (7,300 specimens) are available for this round of proposals. A limited set of individual cryovials will be available for less than the full set of samples. All letters of intent will be reviewed by Division of Health Examination Statistics staff for potential major problems related to the feasibility of the project. If a problem is identified, the Division staff will inform the investigator so it can be addressed in the proposal.

All potential investigators must submit letters of intent. The letter should be no more than two pages and include (1) a descriptive title of the overall proposed research; (2) the name, address and telephone number of the Principal Investigator (PI); (3) a list of key investigators and their institution(s); (4) one paragraph on the background for the proposal and a paragraph briefly addressing each criterion for technical evaluation of letters of intent and proposals; (5) the genetic assessments proposed; (6) a list of proposed variables; and (7) an estimate of the number of samples that would be requested. The background paragraph should state concisely the importance of the research in terms of the broad, long-term objectives and public health relevance and consistency of NCHS's mission to monitor the nations's health.

Letters of intent should be submitted by September 9, 2002.

Ms. Kika Oraegbu, National Center for Health Statistics, Centers for Disease Control and Prevention, 6525 Belcrest Road, Room 1000, Hyattsville, MD 20782, Phone: 301–458–4367, FAX: 301–458–4028, E-Mail: *KDO1@cdc.gov.*

Procedures for Proposals

The investigator should follow these instructions for preparation of proposals: Prepare proposals with a maximum of five single-spaced typed pages, excluding figures and tables, using ten cpi type density. If a proposal is approved, the title, specific aims, name, and phone number of the author will be maintained by NCHS and released if requested by the public. Unapproved proposals will be returned to the investigator and will not be maintained by NCHS. The cover of the proposal should include the name, address, phone number, and E-mail address, if available, of the PI, and the name of the institution where the DNA analysis will be done, and the category of proposal (A, B, C) that would be submitted. The cover page should be signed by the responsible institution representative. Proposals will be ranked by the technical panel on a scale of 1–10 with 10 being the highest rank for each category.

As there are only 20–22 full sets of samples (7,300 specimens) and only a limited set of individual cryovials for proposals requiring less than the full set of samples available for this round of proposals, proposals will be ranked by the technical panel on a scale of 1–10 with 10 being the highest rank for each category.

The proposal should contain, and will be evaluated according to, the following elements:

(1) *Specific Aims*—List the broad objectives; describe concisely and realistically what the research is intended to accomplish, and state the specific hypotheses to be tested. Category A proposals which request using the full set of specimens will receive priority consideration. Category B and C proposals will be evaluated together since they will be competing for the limited set of cryovials.

(2) *Background and Public Health Significance:* Describe the public health significance, scientific merit, and practical utility of the assay. Scientific merit will be judged on the basis of the scientific, technical, or medical significance of the research; the appropriateness and adequacy of the experimental approach; and the methodology proposed to reach the research goals. Convey how the results will be used and the relation of the results to the data already collected in NHANES III. Analyses should be consistent with the NHANES mission to assess the health of the nation. Because NHANES is a complex, multistage probability sample of the national population, the appropriateness of using the NHANES sample to address the goals of the proposal will be an important aspect of determining scientific merit. The Panel will ensure that the proposed project does not go beyond either the general purpose for collecting the samples in the survey, i.e., to determine allele frequencies in subgroups of the population, or, the specific stated goals of the proposal

(3) *Research Design and Methods:* Describe the sampling scheme and number of samples requested if submitting a category C proposal. Include power calculations for the subsample and a list of variables requested; provide a cross-tabulation of requested variables for category C proposals. For all proposal categories, include a detailed description of the laboratory methods. If a non-standard laboratory method is to be used, discuss its advantages over using existing methods. The characteristics of the laboratory assay, such as reliability, validity, and ''state-of-the-art,'' should be included with appropriate references. The potential difficulties and limitations of the proposed procedures should also be discussed. Address adequate methods for handling and storage of samples. NCHS will verify the anonymity for category B and C proposals.

(4) *Discussion regarding the race/ethnicity variables:* If the sample request is limited to specific race or ethnic groups or if information about the race or ethnicity of the subjects is requested, indicate the reason for analyzing race/ethnicity and how the results will be interpreted. Discuss the potential for group harm.

(5) *Clinical relevance of research findings:* The specimens under this Plan are available for genetic research, not genetic testing. Therefore, it is the intent of the program to approve only those proposals that would yield meaningful research, but not clinically relevant information for the participants. Researchers should address whether or not findings from the proposed research merit disclosure.

(6) *Qualifications:* Provide a brief description of the requestor's expertise in the proposed area, including publications in this area within the last three years.

(7) *Anonymity:* Final approval is based upon NCHS confirmation that anonymity can be maintained by the categorization of variables for category C proposals (proposals requiring anonymity).

(8) *Period of performance:* Specify the project period. The period may be up to three years. At the end of the project period, any unused samples must be returned to the NHANES DNA Specimen Bank in accordance with instructions from the Division of Environmental Laboratory Science. Extensions to the period of performance may be requested.

(9) *Funding:* Include the source and status of the funding to perform the requested laboratory analysis. Investigators will be responsible for the cost of processing and shipping the samples. Currently the cost per DNA specimen is $5.00 for proposals that use the full set of samples (~7,300) and $38.00 for subsets. Reimbursement for the samples will be collected before the samples are released.

Proposals will be evaluated by a Genetics Technical Panel and, if approved, by the CDC/NCHS IRB for human subject concerns. The IRB review will be conducted, even though investigators' proposals may have received review by their home institution. The Panel will also review an NCHS evaluation of whether anonymity can be assured for the

proposed project for proposals in categories B and C. The samples that are sent to the investigator will be selected randomly from the domains by NCHS staff. The Director of NCHS will verify that projects have received appropriate reviews.

Requirements for the Inclusion of Women and Racial and Ethnic Minorities in Research

In NHANES III, race/ethnicity was defined by self-report as non-Hispanic white, non-Hispanic black, or Mexican American. Individuals who did not self-select into these categories were classified as ''other.'' If the proposal excludes one or more race/ethnic groups or a gender, this exclusion must be justified.

CDC is also sensitive to the stigmatization of racial/ethnic specific populations through inappropriate reporting and interpretation of findings. For all proposals that request information on race/ethnicity for the samples selected, the investigator should indicate the reason for analyzing race/ethnicity and how the results will be interpreted.

Submission of Proposals

Proposals should be submitted by October 7, 2002. All investigators who submitted letters of intent may submit proposals.

Electronic submission of proposals is encouraged. Please submit proposals to: Ms. Kika Oraegbu, National Center for Health Statistics, 6525 Belcrest Rd., Rm 1000, Hyattsville MD 20782, Phone: (301) 458–4367, FAX: (301) 458–4028, E-Mail: *KDO1@cdc.gov, Attention:* NHANES III Genetic Testing Program.

Approved Proposals

NCHS/NCEH will provide a data file with the requested recoded variables (for category B and C proposals) and a randomly assigned unique identification number that is linked to the DNA specimen. No record connecting the new number with the original identification number will be kept after the samples have been sent. These samples cannot be traced to any files maintained by NCHS. For proposals in category A, the genetic results will be sent back to NCHS so they can be linked to the NHANES III public use data in the Research Data Center for analysis.

Agency Agreement

A formal signed agreement in the form of a Materials Transfer Agreement (MTA) with individuals who have projects approved will be completed before the release of the samples. This agreement will contain the conditions for use of the DNA as stated in this document and as agreed upon by the investigators and CDC. A key component of this agreement is that no attempt will be made to link the results of the proposed research to any other data, including, but not limited to, the NHANES III public use data set. Also, the investigator agrees that the samples cannot be used for commercial purposes.

Progress Reports

A progress report will be submitted annually. CDC/NCHS IRB continuation reports are also required annually.

Disposition of Results and Samples

No DNA samples provided can be used for any purpose other than those specifically requested in the proposal and approved by the Genetics Technical Panel and the NHANES IRB. No sample can be shared with others, including other investigators, unless specified in the proposal and so approved. Any unused samples must be destroyed upon completion of the approved project. Researchers requesting DNA samples for age-race-gender studies and special studies will be required to provide NCHS with the results of all DNA tests performed for each anonymized sample. These results, once returned to NCHS, will be part of the public domain. Therefore, ample time will be given to the investigator to publish results prior to reporting the results to NCHS.

Send Request for Information: Ms. Kika Oraegbu, National Center for Health Statistics, Centers for Disease Control and Prevention, 6525 Belcrest Road, Room 1000, Hyattsville, MD 20782, Phone: 301–458–4367, FAX: 301–458–4028, E-Mail: *KDO1@cdc.gov.*

References

1. Plan and Operation of the Third National Health and Nutrition Examination Survey, 1988–94. National Center for Health Statistics. Vital Health Stat (32) 1994.

2. Clayton EW, Steinberg KK, Khoury MJ, et al. Informed consent for genetic research on stored tissue samples. JAMA 1995;274:1786–1792.

Dated: August 2, 2002.

Joseph R. Carter,

Associate Director for Management and Operations, Centers for Disease Control and Prevention (CDC).

[FR Doc. 02–20038 Filed 8–7–02; 8:45 am]

BILLING CODE 4163–18–P

DEPARTMENT OF HEALTH AND HUMAN SERVICES

Food and Drug Administration

Docket No. 02N–0332

Preparation for the International Conference on Harmonization Meetings in Washington, DC, Including Progress on Implementation of the Common Technical Document; Public Meeting

AGENCY: Food and Drug Administration, HHS.

ACTION: Notice of public meeting.

SUMMARY: The Food and Drug Administration (FDA) is announcing a public meeting entitled ''Preparation for ICH Meetings in Washington, DC, Including Progress on Implementation of the Common Technical Document'' to solicit information and receive comments on the International Conference on Harmonisation (ICH) as well as the upcoming meetings in Washington, DC. The purpose of the meeting is to solicit public input prior to the next Steering Committee and Expert Working Group meetings in Washington, DC, September 9 to 12, 2002, at which discussion of the Common Technical Document and the future of ICH will continue.

Date and Time: The public meeting will be held on September 5, 2002, from 10:30 a.m. to 2 p.m.

Location: The public meeting will be held at 5630 Fishers Lane, rm. 1066, Rockville, MD 20852.

Contact: Kimberly Topper, Center for Drug Evaluation and Research (HFD–21), Food and Drug Administration, 5600 Fishers Lane, Rockville, MD 20857, 301–827–7001, FAX 301–827–6801, e-mail: Topperk@cder.fda.gov.

Registration and Request for Oral Presentation: Send registration information (including name, title, firm name, address, telephone, and fax number), and written material and requests to make oral presentations to the contact person by August 29, 2002.

If you need special accommodations due to a disability, please contact Kimberly Topper at least 7 days in advance.

SUPPLEMENTARY INFORMATION: The International Conference on Harmonisation of Technical Requirements for the Registration of Pharmaceuticals for Human Use was established in 1990 as a joint regulatory/industry project to improve, through harmonization, the efficiency of the process for developing and registering new medicinal products in Europe,

Japan, and the United States without compromising the regulatory obligations of safety and effectiveness.

In recent years, many important initiatives have been undertaken by regulatory authorities and industry associations to promote international harmonization of regulatory requirements. FDA has participated in many meetings designed to enhance harmonization and is committed to seeking scientifically based harmonized technical procedures for pharmaceutical development. One of the goals of harmonization is to identify and then reduce differences in technical requirements for medical product development among regulatory agencies. The ICH was organized to provide an opportunity for harmonization initiatives to be developed with input from both regulatory and industry representatives. The ICH is concerned with harmonization among three regions: The European Union, Japan, and the United States. The six ICH sponsors are the European Commission; the European Federation of Pharmaceutical Industries Associations; the Japanese Ministry of Health, Labor and Welfare; the Japanese Pharmaceutical Manufacturers Association; the Centers for Drug Evaluation and Research and Biologics Evaluation and Research, FDA; and the Pharmaceutical Research and Manufacturers of America. The ICH Secretariat, which coordinates the preparation of documentation, is provided by the International Federation of Pharmaceutical Manufacturers Associations. The ICH Steering Committee includes representatives from each of the ICH sponsors and Canadian Therapeutics Programme, and the European Free Trade Area. The ICH process has achieved significant harmonization of the technical requirements for the approval of pharmaceuticals for human use in the three ICH regions. The current ICH process and structure can be found on the Internet at http://www.ifpma.org/ich1.html

Interested persons may present data, information, or views orally or in writing, on issues pending at the public meeting. Oral presentations from the public will be scheduled between approximately 11:30 a.m. and 1 p.m. Time allotted for oral presentations may be limited to 10 minutes. Those desiring to make oral presentations should notify the contact person by August 29, 2002, and submit a brief statement of the general nature of the evidence or arguments they which to present, the names and addresses, phone number, fax, and e-mail of proposed participants, and an indication of the approximate time requested to make their presentation.

The agenda for the public meeting will be made available on August 29, 2002, under Docket No. 02N–0332, at the Dockets Management Branch (HFA–305), Food and Drug Administration, 5630 Fishers Lane, rm. 1061, Rockville, MD 20852.

Transcripts: Transcripts of the meeting may be requested in writing from the Freedom of Information Office (HFI–35), Food and Drug Administration, 5600 Fishers Lane, rm. 12A–16, Rockville, MD 20857, approximately 15 working days after the meeting at a cost of 10 cents per page.

Dated: August 1, 2002.

Margaret M. Dotzel,

Associate Commissioner for Policy.

[FR Doc. 02–20009 Filed 8–7–02; 8:45 am]

BILLING CODE 4160–01–S

DEPARTMENT OF HEALTH AND HUMAN SERVICES

Health Resources and Services Administration

Advisory Committee; Notice of Meeting

In accordance with section 10(a)(2) of the Federal Advisory Committee Act (Pub. L. 92–463), announcement is made of the following National Advisory body scheduled to meet during the month of September 2002.

The National Advisory Committee on Rural Health will convene its forty-second meeting in the time and place specified below:

Name: National Advisory Committee on Rural Health.

Date and Time: September 8, 2002, 1:30 p.m.–5 p.m.; September 9, 2002, 8:30 a.m.–4:45 p.m.; September 10, 2002, 8 a.m.–10:30 a.m.

Place: Chico Hot Springs Resort, P.O. Box 29, Pray, Montana 59047, Phone: 406–333–4933.

The meeting is open to the public.

Purpose: The National Advisory Committee on Rural Health provides advice and recommendations to the Secretary with respect to the delivery, research, development and administration of health care services in rural areas.

Agenda: Sunday, September 8, at Chico Hot Springs Resort at 1:30 p.m. the chairperson, the Honorable David Beasley, will open the meeting and welcome the Committee members. The first plenary session will consist of presentations by the Montana Quality Improvement Organization and the Montana Health Quality Network. This will be followed by reports from the Quality and Workforce Subcommittees. At 3:45 p.m. the Committee will hear a presentation from Libby Hospital and an update on the Department of Health and Human Services Rural Initiative.

Monday, September 9, at 8:30 a.m. the Committee will depart for a site visit at the Big Timber Hospital. At 11 a.m. the Committee will depart for a site visit to Livingston, Montana. Transportation to these locations will not be provided to the general public. At 3:30 p.m. the Committee will hear a presentation from a representative of the Governor's Health Workforce Study.

The final plenary session will be convened on Tuesday, September 10. Beginning at 8 a.m. there will be a review of the site visits and a report from the Quality Subcommittee. The meeting will conclude with a discussion of the Montana presentations and what issues to raise in the Committee's meeting summary that will be sent to the Secretary. The meeting will be adjourned at 10:30 a.m.

Anyone requiring information regarding the subject Committee should contact Tom Morris, Executive Secretary, National Advisory Committee on Rural Health, Health Resources and Services Administration, Room 9A–55, Parklawn Building, 5600 Fishers Lane, Rockville, MD 20857, telephone (301) 443–0835, Fax (301) 443–2803.

Persons interested in attending any portion of the meeting should contact Michele Pray, Office of Rural Health Policy (ORHP), (301) 443–0835. The National Advisory Committee meeting agenda will be posted on ORHP's Web site, *http://www.ruralhealth.hrsa.gov.*

Dated: August 2, 2002.

Jane M. Harrison,

Director, Division of Policy Review and Coordination.

[FR Doc. 02–20040 Filed 8–7–02; 8:45 am]

BILLING CODE 4165–15–P 3

DEPARTMENT OF HEALTH AND HUMAN SERVICES

National Institutes of Health

National Center for Complementary & Alternative Medicine; Notice of Meeting

Pursuant to section 10(d) of the Federal Advisory Committee Act, as amended (5 U.S.C. Appendix 2), notice is hereby given of the National Advisory Council for Complementary and Alternative Medicine (NACCAM).

The meeting will be open to the public as indicated below, with attendance limited to space available. Individuals who plan to attend and need special assistance, such as sign language interpretation or other reasonable accommodations, should notify the Contact Person listed below in advance of the meeting.

The meeting will be closed to the public in accordance with the provisions set forth in sections 552b(c)(4) and 552b(c)(6), Title 5 U.S.C., as amended. The grant applications and/or contract proposals and the discussion could disclose confidential

trade secrets or commercial property such as patentable material, and personal information concerning individuals associated with the grant applications and/or contract proposals, the disclosure of which would constitute a clearly unwarranted invasion of personal privacy.

Name of Committee: National Advisory Council for Complementary and Alternative Medicine.

Date: August 26, 2002.

Closed: 8:30 a.m. to 12:15 p.m.

Agenda: To review and evaluate grant applications and/or proposals.

Open: 1:15 p.m. to adjournment.

Agenda: The agenda includes Opening Remarks by Director, NCCAM, NIH Director's Remarks by Director, NIH, Report on NCCAM Research Centers Program, Concept Review: Research Centers, CAM Research Education, Clinical Evaluation of CAM Products, PC SPES Update, and other business of the Council.

Place: Neuroscience Conference Center, 6001 Executive Boulevard, Conference Rooms C and D, Rockville, MD 20852.

Contact Person: Jane F. Kinsel, Ph.D., Executive Secretary, National Center for Complementary and Alternative Medicine, National Institutes of Health, 6707 Democracy Blvd., Suite 401, Bethesda, MD 20892. 301/402–7269.

The public comments session is scheduled from 5:45–6 p.m. Each speaker will be permitted 5 minutes for their presentation. Interested individuals and representatives of organizations are requested to notify Dr. Jane Kinsel, National Center for Complementary and Alternative Medicine, NIH, 6707 Democracy Boulevard, Suite 401, Bethesda, Maryland 20892, 301–402–7269, Fax: 301–480–3519. Letters of intent to present comments, along with a brief description of the organization represented, should be received no later than 5 p.m. on August 16, 2002. Only one representative of an organization may present oral comments. Any person attending the meeting who does not request an opportunity to speak in advance of the meeting may be considered for oral presentation, if time permits, and at the discretion of the Chairperson. In addition, written comments may be submitted to Dr. Jane Kinsel at the address listed above up to ten calendar days (September 10, 2002) following the meeting.

Copies of the meeting agenda and the roster of members will be furnished upon request by Dr. Jane Kinsel, Executive Secretary, NACCAM, National Institutes of Health, 6707 Democracy Boulevard, Suite 401, Bethesda, Maryland 20892, 301–402–7269, Fax 301–480–3519.

Dated: August 2, 2002.

LaVerne Y. Stringfield,

Director, Office of Federal Advisory Committee Policy, NIH.

[FR Doc. 02–20109 Filed 8–7–02; 8:45 am]

BILLING CODE 4140–01–M

DEPARTMENT OF HEALTH AND HUMAN SERVICES

National Institutes of Health

National Center for Research Resources; Notice of Closed Meetings

Pursuant to section 10(d) of the Federal Advisory Committee Act, as amended (5 U.S.C. Appendix 2), notice is hereby given of the following meetings.

The meetings will be closed to the public in accordance with the provisions set forth in section 552b(c)(4) and 552b(c)(6), Title 5 U.S.C., as amended. The grant applications and the discussions could disclose confidential trade secrets or commercial property such as patentable material, and personal information concerning individuals associated with the grant applications, the disclosure of which would constitute a clearly unwarranted invasion of personal privacy.

Name of Committee: National Center for Research Resources Special Emphasis Panel Scientific and Technical Review Board on Biomedical and Behavioral Research Facilities.

Date: August 8, 2002.

Time: 2 p.m. to Adjournment.

Agenda: To review and evaluate grant applications.

Place: Office of Review, National Center for Research Resources, 6705 Rockledge Drive, Bethesda, MD 20892. (Telephone Conference Call).

Contact Person: D.G. Patel, PHD, Scientific Review Administrator, Office of Review, National Center for Research Resources, National Institutes of Health, 6705 Rockledge Drive, MSC 7965, One Rockledge Centre, Room 6018, Bethesda, MD 20892–7965, (301) 435–0824, *dgpatel@ncrr.nih.gov*.

This notice is being published less than 15 days prior to the meeting due to the timing limitations imposed by the review and funding cycle.

Name of Committee: National Center for Research Resources Special Emphasis Panel Comparative Medicine.

Date: August 28, 2002.

Time: 7 a.m. to Adjournment.

Agenda: To review and evaluate grant applications.

Place: Sheraton Framingham Hotel, 1657 Worcester Road, Framingham, MA 01701.

Contact Person: Camille M. King, PHD, Scientific Review Administrator, Office of Review, National Center for Research Resources, National Institutes of Health, One Rockledge Centre, MSC 7965, 6705 Rockledge Drive, Suite 6018, Bethesda, MD 20892–7965, (301) 435–0810, *kingc@ncrr.nih.gov*.

Name of Committee: National Center for Research Resources Special Emphasis Panel Biomedical Research Technology.

Date: October 7–8, 2002.

Time: October 7, 2002, 8 a.m. to Adjournment.

Agenda: To review and evaluate grant applications.

Place: Four Points by Sheraton Bethesda, 8400 Wisconsin Avenue, Bethesda, MD 20814.

Contact Person: Mohan Viswanathan, PHD, Scientific Review Administrator, National Center for Research Resources, National Institutes of Health, Office of Review, 6705 Rockledge Drive, MSC 7965, One Rockledge Centre, Room 6018, Bethesda, MD 20892, (301) 435–0829, *viswanathanm@ncrr.nih.gov*.

(Catalogue of Federal Domestic Assistance Program Nos. 93.306, Comparative Medicine, 93.306; 93.333, Clinical Research, 93.333, 93.371, Biomedical Technology; 93.389, Research Infrastructure, National Institutes of Health, HHS)

Dated: August 2, 2002.

LaVerne Y. Stringfield,

Director, Office of Federal Advisory Committee Policy.

[FR Doc. 02–20111 Filed 8–7–02; 8:45 am]

BILLING CODE 4140–01–M

DEPARTMENT OF HEALTH AND HUMAN SERVICES

National Institutes of Health

National Eye Institute; Notice of Closed Meeting

Pursuant to section 10(d) of the Federal Advisory Committee Act, as amended (5 U.S.C. Appendix 2), notice is hereby given of the following meeting.

The meeting will be closed to the public in accordance with the provisions set forth in sections 552b(c)(4) and 552b(c)(6), Title 5 U.S.C., as amended. The grant applications and the discussions could disclose confidential trade secrets or commercial property such as patentable material, and personal information concerning individuals associated with the grant applications, the disclosure of which would constitute a clearly unwarranted invasion of personal privacy.

Name of Committee: National Eye Institute Special Emphasis Panel, NEI U10 Applications on Cataract Anesthesia Management.

Date: August 13, 2002.

Time: 3 p.m. to 5 p.m.

Agenda: To review and evaluate grant applications.

Place: 6120 Executive Blvd., Suite 350, Rockville, MD 20892. (Telephone Conference Call).

Contact Person: Samuel Rawlings, PhD, Chief, Scientific Review Branch, Division of Extramural Research, National Eye Institute, Bethesda, MD 20892. 301–451–2020.

This notice is being published less than 15 days prior to the meeting due to the timing limitations imposed by the review and funding cycle.

(Catalogue of Federal Domestic Assistance Program Nos. 93.867, Vision Research, National Institutes of Health, HHS)

Dated: August 1, 2002.

LaVerne Y. Stringfield,

Director, Office of Federal Advisory Committee Policy.

[FR Doc. 02–20105 Filed 8–7–02; 8:45 am]

BILLING CODE 4140–01–M

DEPARTMENT OF HEALTH AND HUMAN SERVICES

National Institutes of Health

National Heart, Lung, and Blood Institute; Notice of Closed Meeting

Pursuant to section 10(d) of the Federal Advisory Committee Act, as amended (5 U.S.C. Appendix 2), notice is hereby given of the following meeting.

The meeting will be closed to the public in accordance with the provisions set forth in sections 552b(c)(4) and 552b(c)(6), Title 5 U.S.C., as amended. The grant applications and the discussions could disclose confidential trade secrets or commercial property such as patentable material, and personal information concerning individuals associated with the grant applications, the disclosure of which would constitute a clearly unwarranted invasion of personal privacy.

Name of Committee: National Heart, Lung, and Blood Institute Special Emphasis Panel, Demonstration and Education Research Grant.

Date: September 23, 2002.

Time: 8 a.m. to 5 p.m.

Agenda: To review and evaluate grant applications.

Place: Sheraton Columbia Hotel, 10207 Wincopin Circle, Columbia, MD 21060.

Contact Person: Patricia A. Haggerty, Review Branch, Division of Extramural Affairs, National Heart, Lung, and Blood Institute, National Institutes of Health, 6701 Rockledge Drive, Room 7202, Bethesda, MD 20892, 301/435–0310.

(Catalogue of Federal Domestic Assistance Program Nos. 93.233, National Center for Sleep Disorders Research; 93.837, Heart and Vascular Diseases Research; 93.838, Lung Diseases Research; 93.839, Blood Diseases and Resources Research, National Institutes of Health, HHS)

Dated: July 31, 2002.

LaVerne Y. Stringfield,

Director, Office of Federal Advisory Committee Policy.

[FR Doc. 02–20010 Filed 8–7–02; 8:45 am]

BILLING CODE 4140–01–M

DEPARTMENT OF HEALTH AND HUMAN SERVICES

National Institutes of Health

National Human Genome Research Institute; Notice of Meeting

Pursuant to section 10(d) of the Federal Advisory Committee Act, as amended (5 U.S.C. Appendix 2), notice is hereby given of a meeting of the National Council for Human Genome Research.

The meeting will be open to the public as indicated below, with attendance limited to space available. Individuals who plan to attend and need special assistance, such as sign language interpretation or other reasonable accommodations, should notify the Contact Person listed below in advance of the meeting.

The meeting will be closed to the public in accordance with the provisions set forth in sections 552b(c)(4) and 552b(c)(6), Title 5 U.S.C., as amended. The grant applications and/or contract proposals and the discussions could disclose confidential trade secrets or commercial property such as patentable material, and personal information concerning individuals associated with the grant applications and/or contract proposals, the disclosure of which would constitute a clearly unwarranted invasion of personal privacy.

Name of Committee: National Advisory Council for Huamn Genome Research,

Date: September 9–10, 2002.

Open: September 9, 2002, 8:30 a.m. to 12:30 p.m.

Agenda: To discuss matters of program relevance.

Place: National Institutes of Health, Natcher Building, Conference Rooms E1 & E2, 45 Center Drive, Bethesda, MD 20892.

Closed: September 9, 2002, 1 p.m. to Adjournment on Tuesday, September 10, 2002.

Agenda: To review and evaluate grant applications and/or proposals.

Place: National Institutes of Health, Natcher Building, Conference Rooms E1 & E2, 45 Center Drive, Bethesda, MD 20892.

Contact Person: Mark S. Guyer, Director for Extramural Research, Assistant Director for Scientific Coordination, National Human Genome Research Institute, 31 Center Drive, MSC 2033, Building 31, Room B2B07, Bethesda, MD 20892–2033, Bethesda MD 20892, 301–435–5536. *guyerm@mail.nih.gov.*

In the interest of security, NIH has instituted stringent procedures for entrance into the building by non-government employees. Persons without a goverment I.D., will need to show a photo I.D. and sign-in at the security desk upon entering the building.

(Catalogue of Federal Domestic Assistance Program Nos. 93.172, Human Genome Research, National Institutes of Health, HHS)

Dated: July 31, 2002.

LaVerne Y. Stringfield,

Director, Office of Federal Advisory Committee Policy.

[FR Doc. 02–20014 Filed 8–7–02; 8:45 am]

BILLING CODE 4140–01–M

DEPARTMENT OF HEALTH AND HUMAN SERVICES

National Institutes of Health

National Institute of Nursing Research; Amended Notice of Meeting

Notice is hereby given of a change in the meeting of the National Institute of Nursing Research Special Emphasis Panel, June 19, 2002, 3 p.m. to June 19, 2002, 5 p.m. Holiday Inn—Bethesda, 8120 Wisconsin Avenue, Bethesda, MD 20814 which was published in the **Federal Register** on June 18, 2002, FR 67:41435.

The date of the meeting has been rescheduled to August 7, 2002 at 9 a.m. and will be held as a telephone conference meeting at 1 Democracy Boulevard, Bethesda, Maryland. The meeting is closed to the public.

Dated: July 31, 2002.

LaVerne Y. Stringfield,

Director, Office of Federal Advisory Committee Policy.

[FR Doc. 02–20011 Filed 8–7–02; 8:45 am]

BILLING CODE 4140–01–M

DEPARTMENT OF HEALTH AND HUMAN SERVICES

National Institutes of Health

National Institute of Nursing Research; Amended Notice of Meeting

Notice is hereby given of a change in the meeting of the National Institute of Nursing Research Special Emphasis Panel, June 19, 2002, 1 p.m. to June 19, 2002, 3 p.m., Holiday Inn—Bethesda, 8120 Wisconsin Avenue, Bethesda, MD, 20814 which was published in the **Federal Register** on June 18, 2002, FR 67: 41435.

The date of this meeting has been rescheduled to August 9, 2002 at 10 a.m. and will be held as a telephone conference meeting at 1 Democracy

Building Boulevard, Bethesda, Maryland. The meeting is closed to the public.

Dated: July 31, 2002.

LaVerne Y. Stringfield,

Director, Office of Federal Advisory Committee Policy.

[FR Doc. 02–20012 Filed 8–7–02; 8:45 am]

BILLING CODE 4140–01–M

DEPARTMENT OF HEALTH AND HUMAN SERVICES

National Institutes of Health

National Institute of Neurological Disorders and Stroke; Notice of Meeting

Pursuant to section 10(d) of the Federal Advisory Committee Act, as amended (5 U.S.C. Appendix 2), notice is hereby given of a meeting of the National Advisory Neurological Disorders and Stroke Council.

The meeting will be open to the public as indicated below, with attendance limited to space available. Individuals who plan to attend and need special assistance, such as sign language interpretation or other reasonable accommodations, should notify the Contact Person listed below in advance of the meeting.

The meeting will be closed to the public in accordance with the provisions set forth in sections 552b(c)(4) and 552b(c)(6), Title 5 U.S.C., as amended. The grant applications and the discussions could disclose confidential trade secrets or commercial property such as patentable material, and personal information concerning individuals associated with the grant applications, the disclosure of which constitute a clearly unwarranted invasion of personal privacy.

Name of Committee: National Advisory Neurological Disorders and Stroke Council.

Date: September 12–13, 2002.

Open: September 12, 2002, 10:30 AM to 5 PM.

Agenda: Report by the Acting Director, NINDS; Report by the Director, Division of Extramural Research; and other administrative and program developments.

Place: National Institutes of Health, Building 31, C Wing, Conference Room 10, 9000 Rockville Pike, Bethesda, MD 20892.

Closed: September 13, 2002, 8:30 AM to 12 PM.

Agenda: To review and evaluate grant applications.

Place: National Institutes of Health, Building 31, C Wing, Conference Room 10, 9000 Rockville Pike, Bethesda, MD 20892.

Contact Person: Constance W. Atwell, PhD, Associate Director for Extramural Research, National Institute of Neurological Disorders and Stroke, National Institutes of Health, Neuroscience Center, 6001 Executive Blvd., Suite 3309, MSC 9531, Bethesda, MD 20892–9531, (301) 496–9248.

In the interest of security, NIH has instituted stringent procedures for entrance into the building by non-government employees. Persons without a government I.D. will need to show a photo I.D. and sign-in at the security desk upon entering the building.

Information is also available on the Institute's/Center's home page: *www.ninds.nih.gov,* where an agenda and any additional information for the meeting will be posted when available.

(Catalogue of Federal Domestic Assistance Program Nos. 93.853, Clinical Research Related to Neurological Disorders; 93.854, Biological Basis Research in the Neurosciences, National Institutes of Health, HHS)

Dated: August 1, 2002.

LaVerne Y. Stringfield,

Director, Office of Federal Advisory Committee Policy.

[FR Doc. 02–20102 Filed 8–7–02; 8:45 am]

BILLING CODE 4140–01–M

DEPARTMENT OF HEALTH AND HUMAN SERVICES

National Institutes of Health

National Institute of Neurological Disorders and Stroke; Notice of Meetings

Pursuant to section 10(d) of the Federal Advisory Committee Act, as amended (5 U.S.C. Appendix 2), notice is hereby given of meetings of the National Advisory Neurological Disorders and Stroke Council.

The meetings will be open to the public as indicated below, with attendance limited to space available. Individuals who plan to attend and need special assistance, such as sign language interpretation or other reasonable accommodations, should notify the Contact Person listed below in advance of the meeting.

The meetings will be closed to the public in accordance with the provisions set forth in sections 552b(c)(4) and 552b(c)(6), Title 5 U.S.C., as amended. The grant applications and the discussions could disclose confidential trade secrets or commercial property such as patentable material, and personal information concerning individuals associated with the grant applications, the disclosure of which would constitute a clearly unwarranted invasion of personal privacy.

Name of Committee: National Advisory Neurological Disorders and Stroke Council, Training Subcommittee.

Date: September 11, 2002.

Time: 8 P.M. to 10 P.M.

Agenda: To discuss the training programs of the institute.

Place: Holiday Inn, 8120 Wisconsin Avenue, Bethesda, MD 20814.

Contact Person: Constance W. Atwell, PhD, Associate Director for Extramural Research, National Institute of Neurological Disorders and Stroke, National Institutes of Health, Neuroscience Center, 6001 Executive Blvd., Suite 3309, MSC 9531, Bethesda, MD 20892–9531, (301) 496–9248.

Name of Committee: National Advisory Neurological Disorders and Stroke Council, Clinical Trials Subcommittee.

Date: September 12, 2002.

Open: 8 A.M. to 8:30 A.M.

Agenda: To discuss clinical trials policy.

Place: National Institutes of Health, Building 31, C Wing, Conference Room 10, 31 Center Drive, Bethesda, MD 20892.

Closed: 8:30 A.M. to 10 A.M.

Agenda: To review and evaluate grant applications.

Place: National Institutes of Health, Building 31, C Wing, Conference Room 10, 31 Center Drive, Bethesda, MD 20892.

Contact Person: Constance W. Atwell, PhD, Associate Director for Extramural Research, National Institute of Neurological Disorders and Stroke, National Institutes of Health, Neuroscience Center, 6001 Executive Blvd., Suite 3309, MSC 9531, Bethesda, MD 20892–9531, (301) 496–9248.

Name of Committee: National Advisory Neurological Disorders and Stroke Council, Infrastructure, Neuroinformatics, and Computational Neuroscience Subcommittee.

Date: September 12, 2002.

Time: 8 A.M. to 10 A.M.

Agenda: To discuss research mechanisms and infrastructure needs.

Place: National Institutes of Health, 31 Center Drive, Building 31, Room 8A28, Bethesda, MD 20892.

Contact Person: Robert Baughman, MD, Associate Director for Technology Development, National Institute of Neurological Disorders and Stroke, National Institutes of Health, 6001 Executive Blvd., Suite 2137, MSC 9527, Bethesda, MD 20892–9527, (301) 496–1779.

Information is also available on the Institutes/Center's home page: *www.ninds.nih.gov*, where an agenda and any additional information for the meeting will be posted when available.

(Catalogue of Federal Domestic Assistance Program Nos. 93.853, Clinical Research Related to Neurological Disorders; 93.854, Biological Basis Research in the Neurosciences, National Institutes of Health, HHS)

Dated: August 1, 2002.

LaVerne Y. Stringfield,

Director, Office of Federal Advisory Committee Policy.

[FR Doc. 02–20103 Filed 8–7–02; 8:45 am]

BILLING CODE 4140–01–M

DEPARTMENT OF HEALTH AND HUMAN SERVICES

National Institutes of Health

National Institute of Arthritis and Musculoskeletal and Skin Diseases; Notice of Closed Meeting

Pursuant to section 10(d) of the Federal Advisory Committee Act, as amended (5 U.S.C. Appendix 2), notice is hereby given of the following meeting.

The meeting will be closed to the public in accordance with the provisions set forth in sections 552b(c)(4) and 552b(c)(6), Title 5 U.S.C., as amended. The grant applications and the discussions could disclose confidential trade secrets or commercial property such as patentable material, and personal information concerning individuals associated with the grant applications, the disclosure of which would constitute a clearly unwarranted invasion of personal privacy.

Name of Committee: National Institute of Arthritis and Musculoskeletal and Skin Diseases Special Emphasis Panel; AMS Conflicts.

Date: August 27, 2002.

Time: 2 PM to 3 PM.

Agenda: To review and evaluate grant applications.

Place: 1 Democracy, 6701 Democracy Blvd., Suite 707 MSC 4870, Bethesda, MD 20892–4870, (Telephone Conference Call).

Contact Person: Richard J. Bartlett, PhD, Scientific Review Administrator, National Institute of Arthritis and Musculoskeletal and Skin Diseases, Natcher Bldg./Bldg. 45, MSC 6500/Room 5AS–37B, Bethesda, MD 20892, (301) 594–4952.

(Catalogue of Federal Domestic Assistance Program Nos. 93.846, Arthritis, Musculoskeletal and Skin Diseases Research, National Institutes of Health, HHS)

Dated: August 1, 2002.

LaVerne Y. Stringfield,

Director, Office of Federal Advisory Committee Policy.

[FR Doc. 02–20104 Filed 8–7–02; 8:45 am]

BILLING CODE 4140–01–M

DEPARTMENT OF HEALTH AND HUMAN SERVICES

NATIONAL INSTITUTES OF HEALTH

National Institute of Neurological Disorders and Stroke; Notice of Closed Meeting

Pursuant to section 10(d) of the Federal Advisory Committee Act, as amended (5 U.S.C. Appendix 2) notice is hereby given of the following meeting.

The meeting will be closed to the public in accordance with the provisions set forth in sections 552b(c)(4) and 552b(c)(6), Title 5 U.S.C., as amended. The purpose of this meeting is to evaluate clinical research projects with yearly direct costs greater than $1 million dollars for their relevance to the mission and the goals of NINDS. The outcome of the evaluation will be a decision whether NINDS should accept the application for scientific review. The research proposals and the discussions could disclose confidential trade secrets or commercial property such as patentable material, and personal information concerning individuals associated with the proposed research projects, the disclosure of which would constitute a clearly unwarranted invasion of personal privacy.

Name of Committee: Clinical Trials Subcommittee of the National Advisory, Neurological Disorders and Stroke Council.

Date: August 6, 2002.

Time: 2:00 p.m. to 4:00 p.m.

Agenda: To evaluate the rationale of large proposed clinical research projects.

Place: 6001 Executive Boulevard, Bethesda, MD 20892. (Telephone Conference Call).

Contact Person: Dr. Constance W. Atwell, Associate Director for Extramural Research, National Institute of Neurological Disorders and Stroke, 6001 Executive Boulevard, Suite 3309, MSC 9531, Bethesda, MD 20892–9531. 301 496–9248.

This notice is being published less than 15 days prior to the meeting due to the timing limitations imposed by the review and funding cycle.

(Catalogue of Federal Domestic Assistance Program Nos. 93.853, Clinical research Related to Neoruological Disorders; 93.854, Biological Basis Research in the Neurosciences, National Institutes of Health, HHS)

Dated: August 7, 2002.

LaVerne Y. Stringfield,

Director, Office of Federal Advisory Committee Policy.

[FR Doc. 02–20106 Filed 8–7–02; 8:45 am]

BILLING CODE 4140–01–M

DEPARTMENT OF HEALTH AND HUMAN SERVICES

National Institutes of Health

National Institute on Deafness and Other Communication Disorders; Notice of Closed Meeting

Pursuant to section 10(d) of the Federal Advisory Committee Act, as amended (5 U.S.C. Appendix 2), notice is hereby given of the following meeting.

the meeting will be closed to the public in accordance with the provisions set forth in sections 552b(c)(4) and 552b(c)(6), Title 5 U.S.C., as amended. The grant applications and the discussions could disclose confidential trade secrets or commercial property such as patentable material, and personal information concerning individuals associated with the grant applications, the disclosure of which would constitute a clearly unwarranted invasion of personal privacy.

Name of Committee: National Institute on Deafness and Other Communications Disorders Special Emphasis Panel, Re-review of R03 grant application.

Date: August 27, 2002.

Time: 1 p.m. to 1:30 p.m.

Agenda: To review and evaluate grant applications.

Place: 6120 Executive Blvd., Suite 400C, Rockville, MD 20852. (Telephone Conference Call).

Contact Person: Stanley C. Oaks, PhD, Scientific Review Administrator, Scientific Review Branch, Division of Extramural Research, Executive Plaza South, Room 400C, 6120 Executive Blvd., Bethesda, MD 20892–7180. 301–496–8683.

(Catalogue of Federal Domestic Assistance Program Nos. 93.173, Biological Research Related to Deafness and Communicative Disorders, National Institutes of Health, HHS)

Dated: August 2,2002.

LaVerne Y. Stringfield,

Director, Office of Federal Advisory Committee Policy.

[FR Doc. 02–20110 Filed 8–07–02; 8:45 am]

BILLING CODE 4140–01–M

DEPARTMENT OF HEALTH AND HUMAN SERVICES

National Institutes of Health

National Institute on Alcohol Abuse and Alcoholism; Notice of Closed Meetings

Pursuant to section 10(d) of the Federal Advisory Committee Act, as amended (5 U.S.C. Appendix 2), notice is hereby given of the following meetings.

The meetings will be closed to the public in accordance with the provisions set forth in sections 552b(c)(4) and 552b(c)(6), Title 5 U.S.C., as amended. The grant applications and the discussions could disclose confidential trade secrets or commercial property such as patentable material, and personal information concerning individuals associated with the grant applications, the disclosure of which would constitute a clearly unwarranted invasion of personal privacy.

Name of Committee: National Institute on Alcohol Abuse and Alcoholism Special Emphasis Panel Review of R21 Grant Application(s).
Date: August 5, 2002.[1]
Time: 11:30 a.m. to 12:30 p.m.
Agenda: To review and evaluate grant applications.
Place: Wilco Bilding, Suite 409, Rockville, MD 20892 (Telephone Conference Call).
Contact Person: Sean N. O'Rourke, Scientific Review Administrator, Extramural Project Review Branch, National Institute on Alcohol Abuse and Alcoholism, National Institutes of Health, Suite 409, 6000 Executive Boulevard, Bethesda, MD 20892–7003, 301–443–2861.

This notice is being published less than 15 days prior to the meeting due to the timing limitations imposed by the review and funding cycle.

Name of Committee: National Institute on Alcohol Abuse and Alcoholism Special Emphasis Panel Review of R21 Grant Application(s).
Date: August 7, 2002.
Time: 11:30 a.m. to 12:30 p.m.
Agenda: To review and evaluate grant applications.
Place: Willco Building, Suite 409, 6000 Executive Blvd., Rockville, MD 20892 (Telephone Conference Call).
Contact Person: Sean N. O'Rourke, Scientific Review Administrator, Extramural Project Review Branch, National Institute on Alcohol Abuse and Alcoholism, National Institutes of Health, Suite 409, 6000 Executive Boulevard, Bethesda, MD 20892–7003, 301–443–2861.

This notice is being published less than 15 days prior to the meeting due to the timing limitations imposed by the review and funding cycle.

Name of Committee: National Institute on Alcohol Abuse and Alcoholism Special Emphasis Panel ZAA1 DD (22) Biomedical Research Application(s) Review.
Date: August 22, 2002.
Time: 11 a.m. to 12 p.m.
Agenda: To review and evaluate grant applications.
Place: Willco Building, Suite 409, 6000 Executive Blvd., Rockville, MD 20892 (Telephone Conference Call).
Contact Person: Sathasiva B. Kandasamy, Ph.D., Scientific Review Administrator, Extramural Project Review Branch, Office of Scientific Affairs, National Institute on Alcohol Abuse and Alcoholism, 6000 Executive Blvd., Suite 409, Bethesda, MD 20892–7003, 301–443–2926, *skandasa@mail.nih.gov.*

Name of Committee: National Institute on Alcohol Abuse and Alcoholism Initial Review Group, Health Services Research Review Subcommittee, Health Services Review Meeting.
Date: October 10, 2002.
Time: 8:30 a.m. to 5 p.m.
Agenda: To review and evaluate grant applications.
Place: Hilton, 8727 Colesville Road, Silver Spring, MD 20910.
Contact Person: Elsie Taylor, Scientific Review Administrator, Extramural Project Review Branch, National Institute on Alcohol Abuse and Alcoholism, National Institutes of Health, Suite 409, 6000 Executive Blvd., Bethesda, MD 20892–7003, 301–443–9787, *etaylor@niaaa.nih.gov.*

Name of Committee: National Institute on Alcohol Abuse and Alcoholism Initial Review Group, Clinical and Treatment Subcommittee, Review of Clinical Treatment Applications.
Date: October 24–25, 2002.
Time: 8:30 a.m. to 5 p.m.
Agenda: To review and evaluate grant applications.
Place: Bethesda Marriott, 5151 Pooks Hill Road, Bethesda, MD 20814.
Contact Person: Elsie Taylor, MS, Scientific Review Administrator, Extramural Project Review Branch, National Institute on Alcohol Abuse and Alcoholism, National Institutes of Health, Suite 409, 6000 Executive Blvd., Bethesda, MD 20892–7003, 301–443–9787, *etaylor@niaaa.nih.gov.*

(Catalogue of Federal Domestic Assistance Program Nos. 93.271, Alcohol Research Career Development Awards for Scientists and Clinicians; 93.272, Alcohol National Research Service Awards for Research Training; 93.273, Alcohol Research Programs; 93.891, Alcohol Research Center Grants, National Institutes of Health, HHS)

Dated: August 2, 2002.

LaVerne Y. Stringfield,

Director, Office of Federal Advisory Committee Policy.

[FR Doc. 02–20112 Filed 8–7–02; 8:45 am]

BILLING CODE 4140–01–M

DEPARTMENT OF HEALTH AND HUMAN SERVICES

National Institutes of Health

National Institute of Mental Health; Notice of Closed Meeting

Pursuant to section 10(d) of the Federal Advisory Committee Act, as amended (5 U.S.C. Appendix 2), notice is hereby given of the following meeting.

The meeting will be closed to the public in accordance with the provisions set forth in sections 552b(c)(4) and 552b(c)(6), Title 5 U.S.C., as amended. The contract proposals and the discussions could disclose confidential trade secrets or commercial property such as patentable material, and personal information concerning individuals associated with the contract proposals, the disclosure of which would constitute a clearly unwarranted invasion of personal privacy.

Name of Committee: National Institute of Mental Health Special Emphasis Panel, Tools for Mental Health Interventions in Rural and Frontier Areas.
Date: August 28, 2002.
Time: 1 p.m. to 5 p.m.
Agenda: To review and evaluate contract proposals.
Place: Neuroscience Center, National Institutes of Health, 6001 Executive Blvd., Bethesda, MD 20892, (Telephone Conference Call).
Contact Person: Richard E. Weise, PhD, Scientific Review Administrator, Division of Extramural Activities, National Institute of Mental Health, NIH, Neuroscience Center, 6001 Executive Boulevard, Room 6140, MSC9606, Bethesda, MD 20892–9606, 301–443–1225, *rweise@mail.nih.gov.*

This notice is being published less than 15 days prior to the meeting due to the timing limitations imposed by the review and funding cycle.

(Catalogue of Federal Domestic Assistance Program Nos. 93.242, Mental Health Research Grants; 93.281, Scientist Development Award, Scientist Development Award for Clinicians, and Research Scientist Award; 93.282, Mental Health National Research Service Awards for Research Training, National Institutes of Health, HHS)

Dated: August 2, 2002.

LaVerne Y. Stringfield,

Director, Office of Federal Advisory Committee Policy.

[FR Doc. 02–20113 Filed 8–7–02; 8:45 am]

BILLING CODE 4140–01–M

DEPARTMENT OF HEALTH AND HUMAN SERVICES

National Institutes of Health

National Library of Medicine; Notice of Closed Meeting

Pursuant to section 10(d) of the Federal Advisory Committee Act, as amended (5 U.S.C. Appendix 2), notice is hereby given of the following meeting.

The meeting will be closed to the public in accordance with the provisions set forth in sections 552b(c)(4) and 552b(c)(6), Title 5 U.S.C., as amended. The grant applications and the discussions could disclose confidential trade secrets or commercial property such as patentable material, and personal information concerning individuals associated with the grant applications, the disclosure of which would constitute a clearly unwarranted invasion of personal privacy.

Name of Committee: National Library of Medicine Special Emphasis Panel, Internet Access.
Date: August 22, 2002.
Time: 3 p.m. to 4 p.m.
Agenda: To review and evaluate grant applications.
Place: National Library of Medicine, 6705 Rockledge Drive, Suite 301, Bethesda, MD 20892, (Telephone Conference Call).

[1] Editorial Note: This document was received at the Office of the Federal Register on August 5, 2002.

Contact Person: Merlyn M. Rodrigues, MD, PhD, Medical Officer/SRA, National Library of Medicine, Extramural Programs, 6705 Rockledge Drive, Suite 301, Bethesda, MD 20894.

(Catalogue of Federal Domestic Assistance Program Nos. 93.879, Medical Library Assistance, National Institutes of Health, HHS)

Dated: July 31, 2002.

LaVerne Y. Stringfield,

Director, Office of Federal Advisory Committee Policy.

[FR Doc. 02–20013 Filed 8–7–02; 8:45 am]

BILLING CODE 4140–01–M

DEPARTMENT OF HEALTH AND HUMAN SERVICES

National Institutes of Health

Center for Scientific Review; Notice of Closed Meetings

Pursuant to section 10(d) of the Federal Advisory Committee Act, as amended (5 U.S.C. Appendix 2), notice is hereby given of the following meetings.

The meetings will be closed to the public in accordance with the provisions set forth in section 552b(c)(4) and 552b(c)(6), Title 5 U.S.C., as amended. The grant applications and the discussions could disclose confidential trade secrets or commercial property such as patentable material, and personal information concerning individuals associated with the grant applications, the disclosure of which would constitute a clearly unwarranted invasion of personal privacy.

Name of Committee: Center for Scientific Review Special Emphasis Panel.

Date: August 7, 2002.

Time: 1:00 PM to 2:30 PM.

Agenda: To review and evaluate grant applications.

Place: NIH, Rockledge 2, Bethesda, MD 20892. (Telephone Conference Call).

Contact Person: John L. Bowers, PHD, Scientific Review Administrator, Center for Scientific Review, National Institutes of Health, 6701 Rockledge Drive, Room 4168, MSC 7806, Bethesda, MD 20892. (301) 435–1725.

This notice is being published less than 15 days prior to the meeting due to the timing limitations imposed by the review and funding cycle.

Name of Committee: Center for Scientific Review Special Emphasis Panel, Clinical Oncology.

Date: August 12, 2002.

Time: 1:30 PM to 2:30 PM.

Agenda: To review and evaluate grant applications.

Place: NIH, Rockledge 2, Bethesda, MD 20892. (Telephone Conference Call).

Contact Person: Marcia Litwack, PHD, Scientific Review Administrator, Center for Scientific Review, National Institutes of Health, 6701 Rockledge Drive, Room 4150, MSC 7804, Bethesda, MD 20892. (301) 435–1719.

This notice is being published less than 15 days prior to the meeting due to the timing limitations imposed by the review and funding cycle.

(Catalogue of Federal Domestic Assistance Program Nos. 93.306, Comparative Medicine, 93.306; 93.333, Clinical Research, 93.333, 93.337, 93.393–93.396, 93.837–93.844, 93.846–93.878, 93.892, 93.893, National Institutes of Health, HHS)

Dated: August 2, 2002.

LaVerne Y. Stringfield,

Director, Office of Federal Advisory Committee Policy.

[FR Doc. 02–20107 Filed 8–7–02; 8:45 am]

BILLING CODE 4140–01–M

DEPARTMENT OF HEALTH AND HUMAN SERVICES

National Institutes of Health

Center for Scientific Review; Notice of Meeting

Pursuant to section 10(a) of the Federal Advisory Committee Act, as amendment (5 U.S.C. Appendix 2), notice is hereby given of a meeting of the Center for Scientific Review Advisory Committee.

The meeting will be open to the public, with attendance limited to space available. Individuals who plan to attend and need special assistance, such language interpretation or other reasonable accommodations, should notify the Contact Person listed below in advance of the meeting.

Name of Committee: Center for Scientific Review Advisory Committee.

Date: September 30–October 1, 2002.

Time: 8:30 AM to 5:00 PM.

Agenda: Discussion of activities to evaluate organization and function of the Center for Scientific Review Process.

Place: National Institutes of Health, Two Rockledge Center, Conference Room 9100, 6701 Rockledge Drive, Bethesda, MD 20892.

Contact Person: Brent B. Stanfield, PHD, Deputy Director, Center for Scientific Review, National Institutes of Health, 6701 Rockledge Drive, Room 3016, MSC 7776, Bethesda, MD 20892. (301) 435–1114.

Information is also available on the Institute's/Center's home page: *www.csr.nih.gov/drgac/drgac.htm*, where an agenda and any additional information for the meeting will be posted when available.

(Catalogue of Federal Domestic Assistance Program Nos. 93.306, Comparative Medicine, 93.306; 93.333, Clinical Research, 93.333, 93.337, 93.393–93.396, 93.837–93.844, 93.846–93.878, 93.892, 93.893, National Institutes of Health, HHS)

Dated: August 2, 2002.

LaVerne Y. Stringfield,

Director, Office of Federal Advisory Committee Policy.

[FR Doc. 02–20108 Filed 8–7–02; 8:45 am]

BILLING CODE 4140–01–M

DEPARTMENT OF HOUSING AND URBAN DEVELOPMENT

[Docket No. FR–4739–N–38]

Notice of Proposed Information Collection: Comment Request; Prepayment of Direct loans on Section 202 and 202/8 Projects with Inclusion of FHA Mortgage Insurance Guidelines

AGENCY: Office of the Assistant Secretary for Housing-Federal Housing Commissioner, HUD.

ACTION: Notice.

SUMMARY: The proposed information collection requirement described below will be submitted to the Office of Management and Budget (OMB) for review, as required by the Paperwork Reduction Act. The Department is soliciting public comments on the subject proposal.

DATES: *Comments Due Date:* October 7, 2002.

ADDRESSES: Interested persons are invited to submit comments regarding this proposal. Comments should refer to the proposal by name and/or OMB Control Number and should be sent to: Wayne Eddins, Reports Management Officer, Department of Housing and Urban Development, 451 7th Street, SW., L'Enfant Building, Room 8003, Washington, DC 20410.

FOR FURTHER INFORMATION CONTACT: Beverly J. Miller, Director, Office of Asset Management, Department of Housing and Urban Development, 451 7th Street, SW., Washington, DC 20410, telephone number (202) 708–3730 (this is not a toll-free number) for copies of the proposed forms and other available information.

SUPPLEMENTARY INFORMATION: The Department is submitting the proposed information collection to OMB for review, as required by the Paperwork Reduction Act of 1995 (44 U.S.C. Chapter 35, as amended).

This Notice is soliciting comments from members of the public and affected agencies concerning the proposed collection of information to: (1) Evaluate whether the proposed collection is necessary for the proper performance of the functions of the agency, including whether the information will have practical utility; (2) Evaluate the accuracy of the agency's estimate of the burden of the proposed collection of

information; (3) Enhance, the quality, utility, and clarity of the information to be collected; and (4) Minimize the burden of the collection of information on those who are to respond; including the use of appropriate automated collection techniques or other forms of information technology, e.g., permitting electronic submission of responses.

This Notice also lists the following information:

Title of Proposal: Prepayment of Direct Loans on Section 202 and 202/8 Projects with Inclusion of FHA Mortgage Insurance Guidelines.

OMB Control Number, if applicable: None.

Description of the need for the information and proposed use: This information is necessary to gather documents from owners of multifamily housing projects financed under Section 202 of the National Housing Act who voluntarily request to prepay the mortgage. HUD staff must review the documents submitted by the owner to determine if approval of the prepayment request should be granted.

Agency form numbers, if applicable: None.

Estimation of the total numbers of hours needed to prepare the information collection including number of respondents, frequency of response, and hours of response: The number of respondents is 150 generating approximately 150 annual responses; the frequency of response is on occasion; the estimated time to gather and prepare the necessary documents is about 2 hours per submission, and the estimated total annual burden hours is estimated to be 300 hours.

Status of the proposed information collection: New Collection.

Authority: The Paperwork Reduction Act of 1995, 44 U.S.C., Chapter 35, as amended.

Dated: July 30, 2002.

Sean G. Cassidy,

General Deputy Assistant Secretary for Housing-Deputy Federal Housing Commissioner.

[FR Doc. 02–20024 Filed 8–7–02; 8:45 am]

BILLING CODE 4210–27–M

DEPARTMENT OF HOUSING AND URBAN DEVELOPMENT

[Docket No. FR–4739–N–39]

Notice of Proposed Information Collection: Comment Request; HUD's Loss Mitigation Default Counseling Demonstration Program

AGENCY: Office of the Assistant Secretary for Housing-Federal Housing Commissioner, HUD.

ACTION: Notice.

SUMMARY: The proposed information collection requirement described below will be submitted to the Office of Management and Budget (OMB) for review, as required by the Paperwork Reduction Act. The Department is soliciting public comments on the subject proposal.

DATES: *Comments Due Date:* October 7, 2002.

ADDRESSES: Interested persons are invited to submit comments regarding this proposal. Comments should refer to the proposal by name and/or OMB Control Number and should be sent to: Wayne Eddins, Reports Management Officer, Department of Housing and Urban Development, 451 7th Street, SW., L'Enfant Plaza Building, Room 8003, Washington, DC 20410.

FOR FURTHER INFORMATION CONTACT: Joseph McCloskey, Director, Office of Single Family Asset Management, Department of Housing and Urban Development, 451 7th Street, SW., Washington, DC 20410, telephone (202) 708–1672 (this is not a toll free number) for copies of the proposed forms and other available information.

SUPPLEMENTARY INFORMATION: The Department is submitting the proposed information collection to OMB for review, as required by the Paperwork Reduction Act of 1995 (44 U.S.C. Chapter 35, as amended).

This Notice is soliciting comments from members of the public and affected agencies concerning the proposed collection of information to: (1) Evaluate whether the proposed collection is necessary for the proper performance of the functions of the agency, including whether the information will have practical utility; (2) Evaluate the accuracy of the agency's estimate of the burden of the proposed collection of information; (3) Enhance the quality, utility, and clarity of the information to be collected; and (4) Minimize the burden of the collection of information on those who are to respond; including the use of appropriate automated collection techniques or other forms of information technology, *e.g.*, permitting electronic submission of responses.

This Notice also lists the following information:

Title of Proposal: HUD's Loss Mitigation Default Counseling Demonstration Program.

OMB Control Number, if applicable: 2502–0549.

Description of the need for the information and proposed use: The information collection will be used to verify vouchers for reimbursement in HUD's Loss Mitigation Default Counseling Demonstration Program. Each of the Housing Counseling Agencies (HCAs) that are participating in the Demonstration will be eligible to be reimbursed each time a completed Loss Mitigation package is referred to one of the four lenders participating in the Demonstration.

Agency form numbers, if applicable: None.

Estimation of the total numbers of hours needed to prepare the information collection including number of respondents, frequency of response, and hours of response: The estimated total number of hours needed to prepare the information collection is 4,120, the number of respondents is 11 generating approximately 8,240 annual responses, the frequency of response is monthly and on occasion, the estimated time needed to prepare the response is 30 minutes.

Status of the proposed information collection: Extension of a currently approved collection.

Authority: The Paperwork Reduction Act of 1995, 44 U.S.C., Chapter 35, as amended.

Dated: July 30, 2002.

Sean G. Cassidy,

General Deputy Assistant Secretary for Housing-Deputy Federal Housing Commissioner.

[FR Doc. 02–20025 Filed 8–7–02; 8:45 am]

BILLING CODE 4210–27–M

DEPARTMENT OF THE INTERIOR

Bureau of Land Management

[OR–957–00–1420–BJ; GPO2–0315]

Filing of Plats of Survey: Oregon/Washington

AGENCY: Bureau of Land Management, Interior.

ACTION: Notice.

SUMMARY: The plat of survey of the following described lands were officially filed in the Oregon State Office, Portland, Oregon, on June 28, 2002.

Willamette Meridian

Oregon

T. 22 S., R. 30 E., accepted June 19, 2002

A copy of the plats may be obtained from the Oregon State Office, Bureau of Land Management, 333 SW. 1st Avenue, Portland, Oregon 97204, upon required payment. A person or party who wishes to protest against a survey must file with the State Director, Bureau of Land Management, Portland, Oregon, a notice that they wish to protest.

For further information contact: Bureau of Land Management, (333 S.W. 1st Avenue) P.O. Box 2965, Portland, Oregon 97208.

Sherrie Reid,

Branch of Realty and Records Services.

[FR Doc. 02–19946 Filed 8–7–02; 8:45 am]

BILLING CODE 4310–33–M

INTERNATIONAL TRADE COMMISSION

[Investigations Nos. 701–TA–422–425 and 731–TA–964–983 (Final)]

Certain Cold-Rolled Stell Products from Argentina, Australia, Belgium, Brazil, China, France, Germany, India, Japan, Korea, The Netherlands, New Zealand, Russia, South Africa, Spain, Sweden, Taiwan, Thailand, Turkey, and Venezuela

AGENCY: International Trade Commission.

ACTION: Revised schedule for the subject investigations.

EFFECTIVE DATE: August 2, 2002.

FOR FURTHER INFORMATION CONTACT: Fred Fischer (202–205–3179 / *ffischer@usitc.gov*), Office of Investigations, U.S. International Trade Commission, 500 E Street SW., Washington, DC 20436. Hearing-impaired persons can obtain information on this matter by contacting the Commission's TDD terminal on 202–205–1810. Persons with mobility impairments who will need special assistance in gaining access to the Commission should contact the Office of the Secretary at 202–205–2000. General information concerning the Commission may also be obtained by accessing its internet server (*http://www.usitc.gov*). The public record for these investigations may be viewed on the Commission's electronic docket (EDIS–ON–LINE) at *http://dockets.usitc.gov/eol/public.*

SUPPLEMENTARY INFORMATION: On June 3, 2002, the Commission established a schedule for the conduct of the final phase of the subject investigations (67 FR 38291, June 3, 2002). Because official import statistics of Commerce for June 2002 will not be available to the Commission and the public until August 20, 2002, the Commission is revising its schedule.

The Commission's new schedule for the investigations is as follows: The Commission will make its final release of information on August 21, 2002; and final party comments are due on August 23, 2002.

For further information concerning these investigations see the Commission's notice cited above and the Commission's rules of practice and procedure, part 201, subparts A through E (19 CFR part 201), and part 207, subparts A and C (19 CFR part 207).

Authority: These investigations are being conducted under authority of title VII of the Tariff Act of 1930; this notice is published pursuant to § 207.21 of the Commission's rules.

By order of the Commission.
Issued: August 2, 2002

Marilyn R. Abbott,

Secretary to the Commission.

[FR Doc. 02–20059 Filed 8–7–02; 8:45 am]

BILLING CODE 7020–02–P

DEPARTMENT OF JUSTICE

Office of Community Oriented Policing Services (COPS)

Agency Information Collection Activities: Proposed Collection; Comments Requested

ACTION: 30-Day Notice of Information Collection Under Review: New Collection; Making Officer Redeployment Effective (MORE) Closeout Report.

The Department of Justice (DOJ) Office of Community Oriented Policing Services (COPS) has submitted the following information collection request to the Office of Management and Budget (OMB) for review and approval in accordance with the Paperwork Reduction Act of 1995. The proposed information collection is published to obtain comments from the public and affected agencies.

The purpose of this notice is to allow for an additional 30 days for public comment until September 9, 2002. This process is conducted in accordance with 5 CFR 1320.10. Written comments and/or suggestions regarding the items contained in this notice, especially the estimated public burden and associated response time, should be directed to the Office of Management and Budget, Office of Information and Regulatory Affairs, Attention Department of Justice Desk Officer, Washington, DC 20503. Additionally, comments may be submitted to OMB via facsimile to (202) 395–7285.

Written comments and suggestions from the public and affected agencies concerning the proposed collection of information are encouraged. Your comments should address one or more of the following four points:

(1) Evaluate whether the proposed collection of information is necessary for the proper performance of the functions of the agency, including whether the information will have practical utility;

(2) Evaluate the accuracy of the agency's estimate of the burden of the proposed collection of information, including the validity of the methodology and assumptions used;

(3) Enhance the quality, utility, and clarity of the information to be collected; and

(4) Minimize the burden of the collection of information on those who are to respond, including through the use of appropriate automated, electronic, mechanical, or other technological collection techniques or other forms of information technology, *e.g.*, permitting electronic submission of responses.

Overview of this information collection:

(1) *Type of Information Collection:* New Collection.

(2) *Title of the Form/Collection:* Making Officer Redeployment Effective (MORE) Closeout Report.

(3) *Agency form number, if any, and the applicable component of the Department of Justice sponsoring the collection:* COPS Form Number: N/A.

(4) *Affected public who will be asked or required to respond, as well as a brief abstract:* Primary: MORE award recipients. Other: None. Abstract: The information collected will be used by the COPS Office to determine that MORE award recipients have completed the grant programmatic requirements.

(5) *An estimate of the total number of respondents and the amount of time estimated for an average respondent to respond:* There will be an estimated 1,856 responses per year. The estimated amount of time required for the average respondent to respond is: 1.0 hour.

(6) *An estimate of the total public burden (in hours) associated with the collection:* 3,712 annually.

If additional information is required contact: Brenda Dyer, Deputy Clearance Officer, Information Management and Security Staff, Justice Management Division, United States Department of Justice, 601 D Street NW., Patrick Henry Building, Suite 1600, NW., Washington, DC 20530.

Dated: August 2, 2002.

Brenda Dyer,

Deputy Clearance Officer, Department of Justice.

[FR Doc. 02–20056 Filed 8–7–02; 8:45 am]

BILLING CODE 4410–AT–M

DEPARTMENT OF JUSTICE

Office of Community Oriented Policing Services (COPS)

Agency Information Collection Activities: Proposed collection; Comment Requested

ACTION: 60-Day notice of information collection under review; new collection; public safety/crime prevention proposal kit.

The Department of Justice (DOJ), Office of Community Oriented Policing Services (COPS) has submitted the following information collection request to the Office of Management and Budget (OMB) for review and approval in accordance with the Paperwork Reduction Act of 1995. The proposed information collection is published to obtain comments from the public and affected agencies.

Comments are encouraged and will be accepted for sixty days until October 7, 2002. This process is conducted in accordance with 5 CFR 1320.10.

If you have comments especially on the estimated public burden or associated response time, suggestions, or need a copy of the proposed information collection instrument with instructions or additional information, please contact Gretchen De Pasquale, Office of Community Oriented Policing Services, 1100 Vermont Avenue, NW., Washington, DC 20530.

Written comments and suggestions from the public and affected agencies concerning the proposed collection of information are encouraged. Your comments should address one or more of the following four points:

(1) Evaluate whether the proposed collection of information is necessary for the proper performance of the functions of the agency, including whether the information will have practical utility;

(2) Evaluate the accuracy of the agency's estimate of the burden of the proposed collection of information, including the validity of the methodology and assumptions used;

(3) Enhance the quality, utility, and clarity of the information to be collected; and

(4) Minimize the burden of the collection of information on those who are to respond, including through the use of appropriate automated, electronic, mechanical, or other technological collection techniques or other forms of information technology, e.g., permitting electronic submission of responses.

Overview of this information collection:

(1) *Type of Information Collection:* New Collection.

(2) *Title of the Form/Collection:* Public Safety/Crime Prevention Proposal Kit.

(3) *Agency form number, if any, and the applicable component of the Department of Justice sponsoring the collection: Form Number:* None. U.S. Department of Justice, Office of Community Oriented Policing Services (COPS).

(4) *Affected public who will be asked or required to respond, as well as a brief abstract: Primary:* State and local law enforcement entities. *Other:* None.

Abstact: The information collected by the Public Safety/Crime Prevention Proposal Kit is requested to obtain a comprehensive understanding of project objectives in accordance with the Federally appropriated mandate and grant program policies of the COPS Office.

(5) *An estimate of the total number of respondents and the amount of time estimated for an average respondent to respond:* There will be an estimated 160 responses. The estimated amount of time required for the average respondent to respond is: 15 hours.

(6) *An estimate of the total public burden (in hours) associated with the collection:* 2,560 hours.

If additional information is required contact: Brenda Dyer, Deputy Clearance Officer, Information Management and Security Staff, Justice Management Division, United States Department of Justice, 601 D Street NW., Patrick Henry Building, Suite 1600, NW., Washington, DC 20530.

Dated: August 2, 2002.

Brenda Dyer,

Deputy Clearance Officer, United States Department of Justice.

[FR Doc. 02–20057 Filed 8–7–02; 8:45 am]

BILLING CODE 4410–AT–M

DEPARTMENT OF JUSTICE

Notice of Lodging of Consent Decree Pursuant to the Clean Water Act

In accordance with Departmental policy; 28 CFR 50.7, notice is hereby given that a proposed amendment to the consent decree in *United States* v. *Quaker State Corporation,* Civil Action No. 93–0196W, was lodged with the United States Court for the Northern District of West Virginia on July 18, 2002.

After entry of the decree, Quaker State merged with Pennzoil Corporation to form Pennzoil-Quaker State, the successor to Quaker State. In implementing work required by the original decree in settlement of claims under the Resource, Conservation and Recovery Act (''RCRA''), Pennzoil-Quaker State failed to install control measures required by the Clean Air Act (''CAA'') to prevent or reduce fugitive emissions. It has now agreed to implement the necessary safeguards. The proposed amendment specifies the work to be implemented and the schedule for doing do, and provides for a penalty of $23,250, to be split between the United States and the West Virginia DEP.

The Department of Justice will receive, for a period of thirty (30) days from the date of this publication, comments relating to the proposed consent decree. Comments should be addressed to the Assistant Attorney General for the Environment and Natural Resources Division, Department of Justice, Washington, DC 20530. Each communication should refer on its face to *United States* v. *Quaker State,* DOJ #90–5–2–1–1873A.

The proposed consent decree may be examined at the office of the United States Attorney for the Northern District of West Virginia, 1100 Main Street, Suite 200, Wheeling, WV 26003; and the Region III Office of the Environmental Protection Agency, 1650 Arch Street, Philadelphia, PA 19103–2029. A copy of the proposed consent decree may be obtained by faxing a request to Tonia Fleetwood, Department of Justice Consent Decree Library, fax number (202) 616–6584; phone confirmation (202) 514–1547. In requesting a copy, please forward the request and a check in the amount of $2.00 (25 cents per page reproduction cost) payable to the U.S. Treasury, referencing the DOJ Consent Decree Library, *United States* v. *Quaker State,* DOJ #90–5–2–1–1873A, to the first-class mail address listed above.

Robert Brook,

Assistant Section Chief, Environmental Enforcement Section, Environment and Natural Resources Division.

[FR Doc. 02–20033 Filed 8–7–02; 8:45 am]

BILLING CODE 4410–15–M

DEPARTMENT OF JUSTICE

Notice of Lodging of Consent Decree Pursuant to the Comprehensive Environmental Response, Compensation and Liability Act

In accordance with 28 CFR 50.7 and section 122 of the Comprehensive Environmental Response, Compensation and Liability Act (''CERCLA''), 42 U.S.C. 9622, the Department of Justice gives notice that a proposed consent decree, in *United States* v. *Lockheed Martin*

Corporation, et al., Civil No. 4:02CV–146–M (W.D. Ky.), was lodged with the United States District Court for the Western District of Kentucky on July 26, 2002, pertaining to the Green River Landfill Superfund Site located in Maceo, Daviess County, Kentucky (the ''Site''). The proposed consent decree would resolve the United States' civil claims under sections 106 and 107 of CERCLA, 42 U.S.C. 9606 and 9607, and section 7003 of the Solid Waste Disposal Act, as amended (''RCRA''), 42 U.S.C. 6973, including Natural Resource Damages, against the Settling Defendants: 15 generators and a current owner of a portion of the Site. The proposed consent decree also resolves claims against a Settling Federal Agency.

Under the proposed consent decree, 10 Settling Defendants (''Settling Performing Parties''), are obligated to finance and perform any remaining work at the Site for Operable Unit 1, principally operation and maintenance (''O&M'')—obligations initially imposed by a Unilateral Administrative Order (''UAO'') issued by U.S. Environmental Protection Agency (''U.S. EPA'') in 1996—perform the remedial design/remedial action for Operable Unit 2 (estimated total present value of all response actions to be undertaken under the Decree: $3.7 million), and pay all Future Response Costs at the Site not inconsistent with the National Contingency Plan, excluding the first $307,449 of Future Oversight Costs to be incurred by the United States. Six Settling Defendants (''Settling Non-Performing Parties'') are obligated to pay monies to the Settling Performing Parties for costs incurred and to be incurred for response actions at the Site. In addition, the United States, on behalf of the Settling Federal Agency, would pay $155,000 to the Settling Performing Parties in reimbursement of the Settling Performing Parties' response costs incurred and to be incurred at the Site.

The Department of Justice will receive, for a period of thirty (30) days from the date of this publication, comments relating to the proposed consent decree. Comments should be addressed to the Assistant Attorney General, Environment and Natural Resources Division, United States Department of Justice, Washington, DC 20530, and should refer to *United States* v. *Lockheed Martin Corporation, et al.,* Civil No. 4:02CV–146–M (W.D. Ky.), and DOJ Reference No. 90–11–2–1098. Commenters may request an opportunity for a public meeting in the affected area, in accordance with section 7003(d) of RCRA, 42 U.S.C. 6973(d).

The proposed consent decree may be examined at: (1) The Office of the United States Attorney for the Western District of Kentucky, 510 West Broadway, 10th Floor, Louisville, Kentucky 40202, (502–582–5911); and (2) the United States Environmental Protection Agency (Region 4), 61 Forsyth Street, Atlanta, Georgia 30303 (contact: Lucia Mendez (404–562–9637)). A copy of the proposed consent decree may be obtained by mail from the Consent Decree Library, U.S. Department of Justice, PO Box 7611, Washington, DC 20044–7611. In requesting a copy, please refer to the referenced case and DOJ Reference Number and enclose a check in the amount of $26.75 for the consent decree only (107 pages, at 25 cents per page reproduction costs), or $126.75 for the consent decree and all appendices (507 pages), made payable to the Consent Decree Library.

Ellen M. Mahan,

Assistant Chief, Environmental Enforcement Section, Environment and Natural Resources Division.

[FR Doc. 02–20034 Filed 8–7–02; 8:45 am]

BILLING CODE 4410–15–M

DEPARTMENT OF JUSTICE

Office of Justice Programs

Agency Information Collection Activities: Proposed Collection; Comments Requested

ACTION: 30-Day notice of information collection under review: Reinstatement, without change, of a previously approved collection for which approval has expired; Victims of Crime Act, Crime Victim Assistance Grant Program, Subgrant Award Report.

The Department of Justice (DOJ), Office of Justice Programs has submitted the following information collection request to the office of Management and Budget (OMB) for review and approval in accordance with the paperwork Reduction Act of 1995. The proposed information collection is published to obtain comments from the public and affected agencies. This proposed information collection was previously published in the **Federal Register** Volume 67, Number 90, page 31380 on May 9, 2002, allowing for a 60 day comment period.

The purpose of this notice is to allow for an additional 30 days for public comment until September 9, 2002. This process is conducted in accordance with 5 CFR 1320.10.

Written comments and/or suggestions regarding the items contained in this notice, especially the estimated public burden and associated response time, should be directed to The Office of Management and Budget, Office of Information and Regulatory Affairs, Attention Department of Justice Desk Officer, Washington, DC. 20503. Additionally, comments may be submitted to OMB via facsimile to (202)–395–7285.

Request written comments and suggestions from the public and affected agencies concerning the proposed collection of information are encouraged. Your comments should address one or more of the following four points:

(1) Evaluate whether the proposed collection of information is necessary for the proper performance of the functions of the agency, including whether the information will have practical utility;

(2) Evaluate the accuracy of the agencies estimate of the burden of the proposed collection of information including the validity of the methodology and assumptions used;

(3) Enhance the quality, utility, and clarity of the information to be collected; and

(4) Minimize the burden of the collection of information on those who are to respond, including through the use of appropriate automated, electronic, mechanical, or other technological collection techniques or other forms of information technology, e.g., permitting electronic submission of responses.

Overview of This Information Collection

(1) *Type of Information Collection:* Reinstatement, With change, of a Previously Approved Collection for Which Approval has Expired.

(2) *Title of the Form/Collection:* Victims of Crime Act, Crime Victim Assistance Grant Program, Subgrant Award Report.

(3) *Agency form number, if any, and the applicable component of the Department of Justice sponsoring the collection: Form Number:* 1121–0142. Office for Victims of Crime, Office of Justice Programs, U.S. Department of Justice.

(4) *Affected public who will be asked or required to respond, as well as a brief abstract: Primary:* State, Local or Tribal Government. *Other:* None. the information requested is necessary to ensure compliance with statutory criteria which allows the Director of OVC to collect performance data from recipients of the VOCA victim assistance grant funds. The affected

public include up to 57 States and territories administering the crime assistance provisions of the Victims of Crime Act.

(5) *As estimate of the total number of respondents and the amount of time estimated for an average respondent to respond:* There are 57 respondents who will complete a three minute subgrant award report. However, a State can be responsible for entering subgrant data for as many as 9 to 417 programs.

(6) *An estimate of the total public burden (in hours) associated with the collection:* There are 295 burden hours associated with this information collection.

If additional information is required contact; Mrs. Brenda E. Dyer, Deputy Clearance Officer, United States Department of Justice, Information Management and Security Staff, Justice Management Division, Suite 1600, Patrick Henry Building, 601 D Street NW., Washington, DC 20530.

Dated: August 2, 2002.

Brenda E. Dyer,

Department Deputy Clearance Officer, United States Department of Justice.

[FR Doc. 02–20055 Filed 8–7–02; 8:45 am]

BILLING CODE 4410–18–M

DEPARTMENT OF LABOR

Office of the Secretary

Solicitation For Grant Applications (SGA 02–19); Expanding Economic Opportunity and Income Security Through Workforce Education, Skills Training, Employment Creation and Local Economic Development

AGENCY: Bureau of International Labor Affairs, Office of Foreign Relations, Labor.

ACTION: Notice of correction.

SUMMARY: The available funding level is corrected downward from $4,000,000.00 to $3,285,000.00. All technical and administrative requirements under the SGA are unchanged. This solicitation (SGA) will be published in the **Federal Register** on Tuesday, August 6, 2002.

FOR FURTHER INFORMATION CONTACT: Lisa Harvey, Department of Labor, Procurement Services Center, Room N–5416, 200 Constitution Ave., NW., Washington, DC 20210, Telephone (202) 693–4570, e-mail: *harvey-lisa@dol.gov.*

Signed at Washington, DC, this 2nd day of August, 2002.

Lawrence J. Kuss,

Grant Officer.

[FR Doc. 02–20117 Filed 8–7–02; 8:45 am]

BILLING CODE 4510–28–M

NATIONAL FOUNDATION FOR THE ARTS AND HUMANITIES

Institute of Museum and Library Services; Proposed Collection, Comment Request Recruiting and Educating Librarians for the 21st Century Application Form

ACTION: Notice.

SUMMARY: The Institute of Museum and Library Services as part of its continuing effort to reduce paperwork and respondent burden, conducts a preclearance consultation program to provide the general public and federal agencies with an opportunity to comment on proposed and/or continuing collections of information in accordance with the Paperwork Reduction Act of 1995 (PRA95) [44 U.S.C. 3508(2)(A)] This program helps to ensure that requested data can be provided in the desired format, reporting burden (time and financial resources) is minimized, collection instruments are clearly understood, and the impact of collection requirements on respondents can be properly assessed. Currently the Institute of Museum and Library Services is soliciting comments concerning the proposed study of the needs of assessment of end-users in library and museum digitization projects funded through the Institute of Museum and Library Services.

A copy of the proposed information collection request can be obtained by contacting the individual listed below in the addressee section of this notice.

DATES: Written comments must be submitted to the office listed in the addressee section below on or before October 7, 2002.

IMLS is particularly interested in comments that help the agency to:

- Evaluate whether the proposed collection of information is necessary for the proper performance of the functions of the agency, including whether the information will have practical utility;
- Evaluate the accuracy of the agency's estimate of the burden of the proposed collection of information including the validity of the methodology and assumptions used;
- Enhance the quality, utility and clarity of the information to be collected; and
- Minimize the burden of the collection of information on those who are to respond, including through the use of appropriate automated electronic, mechanical, or other technological collection techniques or other forms of information technology, *e.g.* permitting electronic submissions of responses.

ADDRESSES: Send comments to Stephanie Clark, Office of Library Services, Institute of Museum and Library Services, 1100 Pennsylvania Ave., NW., Room 802, Washington, DC 20506. Fax: 202–606–1077 or by email *sclark@imls.gov* Fax or e-mail preferred.

SUPPLEMENTARY INFORMATION:

I. Background

The Institute of Museum and Library Services is an independent Federal grant-making agency authorized by the Museum and Library Services Act Public Law 104–208. The IMLS provides a variety of grant programs to assist the nation's museums and libraries in improving their operations and enhancing their services to the public. Museums and libraries of all sizes and types may receive support from IMLS programs.

The President's FY2003 Budget Request submitted to Congress in early February, 2002 proposes a $10 million initiative to educate and train librarians. Anticipating the loss of as many as 68% of the current cohort of professional librarians by 2019, the initiative will be designed to ''help recruit a new generation of librarians.''

The President's proposed initiative recognizes the key role of libraries and librarians in maintaining the flow of information that is critical to support formal education; to guide intellectual, scientific, and commercial enterprise; to strengthen individual decisions; and to create the informed populace that lies at the core of democracy.

Draft application and guidelines are prepared contingent upon Congressional action.

Agency: Institute of Museum and Library Services.

Title: Recruiting and Educating Librarians for the 21st Century.

OMB Number: n/a.

Agency Number: 3137.

Frequency: One time.

Affected Public: Libraries and school of library information science.

Number of Respondents: 120.

Estimated Time Per Respondent: 40 hours.

Total Burden Hours: 4800.

Total Annualized capital/startup costs: 0.

Total Annual costs: 0.

CONTACT: Mamie Bittner, Director Office of Public and Legislative Affairs, Institute of Museum and Library Services, 1100 Pennsylvania Avenue, NW., Washington, DC 20506. e-mail *mbittner@imls.gov* fax (202) 606–8591. e-mail or fax preferred.

Dated: August 2, 2002.

Mamie Bittner,

Director of Public and Legislative Affairs.

[FR Doc. 02–20070 Filed 8–7–02; 8:45 am]

BILLING CODE 7036–01–M

NUCLEAR REGULATORY COMMISSION

[Docket No. 50–247–OLA and ASLBP No. 02–789–01–OLA]

Atomic Safety and Licensing Board; In the Matter of Entergy Nuclear Indian Point 2, LLC, and Entergy Nuclear Operations, Inc., (Indian Point Nuclear Generating Unit No. 2); Public Notice of Prehearing Conference

August 2, 2002.

Before Administrative Judges: Michael C. Farrar, Chairman, Dr. Richard F. Cole, Dr. Charles N. Kelber.

The Atomic Safety and Licensing Board presiding over this license amendment proceeding hereby gives public notice that on Tuesday, August 27, 2002, it will hold a prehearing conference at the Hilton Rye Town, 699 Westchester Avenue, Rye Brook, New York. The conference will convene at 9:00 A.M. and conclude by 1:00 P.M. (no lunch break will be taken). The purpose of this prehearing conference is to hear arguments on (1) the standing of petitioner Riverkeeper, Inc. to intervene in the proceeding; (2) the admissibility of Riverkeeper's petition under regulatory standards governing late-filed intervention requests; and (3) the admissibility of any proposed contention(s) which Riverkeeper may file. This notice sets forth the background developments that led to the conference and covers matters related to public attendance and document availability.

A. Background

The issues before the Board in this license amendment proceeding relate to the admissibility of a late-filed intervention petition. The petition submitted by Riverkeeper challenges the pending application of Entergy Nuclear Indian Point 2, LLC and Entergy Nuclear Operations, Inc. (Entergy), the new operators of Indian Point Nuclear Generation Unit No. 2, for a license change that would, in effect, give the operators a one-time five-year extension of the period within which to conduct the ''containment integrated leak rate'' test that is otherwise required every ten years.

After conducting a review of the application, the NRC Staff issued a **Federal Register** notice (66 FR 44,161, 44,165 (August 22, 2001)) seeking public comment on its proposal to make a ''no significant hazards'' determination as to the amendment request. The notice also provided the opportunity for anyone opposed to the amendment ''whose interest may be affected'' thereby to file within 30 days (by September 21, 2001) a petition to intervene in the proceeding and to request a hearing.

On March 18, 2002, nearly six months after the deadline for intervening, Riverkeeper filed a ''Section 2.714 Petition for Leave to Intervene and Request for a Hearing.'' Riverkeeper justified its late filing, and its concomitant request for a hearing on the proposed license amendment, by pointing to the then-recent disclosure in the press of the discovery of rusted areas in the reactor containment building. The three participants in this proceeding—-the petitioner Riverkeeper, the licensee Entergy, and the NRC Staff—-have each filed several pleadings since that time, and are expected to be filing additional pleadings before the conference.

B. Public Attendance at Prehearing Conference

Members of the public are welcome to attend the conference, but are advised that this adjudicatory proceeding is open for observation only. In other words, oral presentations at the conference will be limited to the three organizations listed above, which have undertaken the task of full participation in the proceeding.

In accordance with the policies that govern NRC adjudicatory proceedings, members of the public who do attend will be subject to security screening, which may involve the use of metal detectors and the inspection of briefcases and handbags. Signs, banners, posters, and the like are not allowed because they are disruptive to the active participants in the proceeding and to other members of the audience.

C. Availability of Documents

Documents relating to the Entergy Indian Point Nuclear Generating Unit No. 2 license amendment application and the Riverkeeper petition for intervention at issue in this pretrial conference are now on file at the Commission's Public Document Room, 11545 Rockville Pike, Rockville, Maryland, 20850, and may also be obtained through ADAMS, the electronic Agencywide Documents Access and Management System, accessible through the NRC Web site, using the link *http://www.nrc.gov/reading-rm/adams.html.* Follow the instructions on the Web site to download and install the appropriate ADAMS software onto your computer. After the installation is complete, read the available online instructions on how to search for documents on ADAMS. Documents are commonly accessed by using docket numbers. All publicly available documents relating to the Indian Point proceeding can be accessed by entering 05000247 in the docket field line in the ''ADAMS Find'' menu.

Dated at Rockville, Maryland, on August 2, 2002.

For the Atomic Safety and Licensing Board.

Michael C. Farrar,

Chairman, Administrative Judge.

[FR Doc. 02–20083 Filed 8–7–02; 8:45 am]

BILLING CODE 7590–01–P

NUCLEAR REGULATORY COMMISSION

[Docket Nos. 50–315 and 50–316]

In the Matter of Indiana Michigan Power Company, (Donald C. Cook Nuclear Plant, Units 1 and 2); Order Approving Application Regarding Proposed Corporate Restructuring

I

Indiana Michigan Power Company (I&M or the licensee) owns 100 percent of the Donald C. Cook Nuclear Plant (D.C. Cook), Units 1 and 2, located in Berrien County, Michigan. I&M exclusively operates the facility.

I&M is a wholly owned, direct subsidiary of American Electric Power Corporation (AEP). I&M is the sole holder of Facility Operating Licenses Nos. DPR–58 for D.C. Cook Unit 1, and DPR–71 for D.C. Cook Unit 2, issued by the U.S. Nuclear Regulatory Commission (NRC or the Commission) pursuant to Part 50 of Title 10 of the *Code of Federal Regulations* (10 CFR Part 50) on October 25, 1974, and December 23, 1977, respectively.

II

Pursuant to section 184 of the Atomic Energy Act of 1954, as amended, and 10 CFR 50.80, I&M filed an application dated March 28, 2002, requesting the Commission's consent to the indirect transfer of the D.C. Cook Units 1 and 2 licenses. The indirect transfer would occur as a result of a proposed corporate restructuring, under which an affiliate company, Central and South West Corporation (CSW), would become the direct parent company of I&M. I&M and CSW are currently wholly owned, direct subsidiaries of AEP. AEP is a registered holding company under the Public Utility Holding Company Act of 1935, as amended. Upon the completion of the

restructuring, CSW will remain a wholly owned, direct subsidiary of AEP, while I&M will be a wholly owned, direct subsidiary of CSW. Thus, I&M will become an indirect subsidiary of AEP.

No physical changes to the D.C. Cook facility or operational changes are proposed in the application. I&M, which is authorized under the licenses to operate and maintain the facility, will continue to do so following the restructuring. No direct transfer of the licenses will result from the planned restructuring. Notice of this request for approval was published in the **Federal Register** on May 8, 2002 (67 FR 30980). No hearing requests or written comments were received.

Under 10 CFR 50.80, no license shall be transferred, directly or indirectly, through transfer of control of the license, unless the Commission gives its consent in writing. Upon review of the information submitted in the application and other information before the Commission, the NRC staff has determined that the proposed restructuring of I&M's parent organization described above will not affect the qualifications of I&M as the holder of the D.C. Cook Units 1 and 2 licenses, and that the indirect transfer of the licenses, to the extent effected by the restructuring, is otherwise consistent with applicable provisions of laws, regulations, and orders issued by the Commission, subject to the conditions set forth herein. These findings are supported by a safety evaluation dated August 2, 2002.

III

Accordingly, pursuant to sections 161b, 161i, 161o, and 184 of the Atomic Energy Act of 1954, as amended, 42 U.S.C. 2201(b), 2201(i), 2201(o), and 2234; and 10 CFR 50.80, *it is hereby ordered* that the application regarding the indirect license transfers referenced above is approved, subject to the following conditions:

(1) Following the completion of the subject indirect license transfers, I&M shall provide the Director of the Office of Nuclear Reactor Regulation a copy of any application, at the time it is filed, to transfer (excluding grants of security interests or liens) from I&M to its parent, or to any other affiliated company, facilities for the production, transmission, or distribution of electric energy having a depreciated book value exceeding ten percent (10%) of I&M's consolidated net utility plant, as recorded on its book of account.

(2) Should the corporate restructuring described above not be completed by July 31, 2003, this Order shall become null and void, provided, however, upon application and for good cause shown, such date may be extended.

This Order is effective upon issuance.

IV

For further details with respect to this Order, see the application dated March 28, 2002, and the safety evaluation dated August 2, 2002, which are available for inspection at the Commission's Public Document Room, U.S. Nuclear Regulatory Commission, One White Flint North, Room O–1 F21, 11555 Rockville Pike, Rockville, MD 20852–2738, and accessible electronically through the ADAMS Public Electronic Reading Room link at the NRC Web site (*http://www.NRC.gov*).

Dated at Rockville, Maryland, this 2nd day of August, 2002.

For the Nuclear Regulatory Commission.

John A. Zwolinski,

Director, Division of Licensing Project Management, Office of Nuclear Reactor Regulation.

[FR Doc. 02–20085 Filed 8–7–02; 8:45 am]

BILLING CODE 7590–01–P

NUCLEAR REGULATORY COMMISSION

[Docket Nos. 50–315 AND 50–316]

Indiana Michigan Power Company; Notice of Consideration of Issuance of Amendments to Facility Operating Licenses, Proposed No Signigicant Hazards Consideration Determination, and Opportunity for a Hearing

The U.S. Nuclear Regulatory Commission (the Commission) is considering issuance of amendments to Facility Operating Licenses Nos. DPR–58 and DPR–74 issued to Indiana Michigan Power Company (the licensee) for operation of the Donald C. Cook Nuclear Power Plant, Units 1 and 2, located in Berrien County, Michigan.

The proposed amendments would amend Operating Licenses Nos. DPR–58 and DPR–74 to add a license condition allowing a one-time 140-hour allowed outage time for the essential service water (ESW) system, to allow ESW pump replacement during plant operation.

Before issuance of the proposed license amendments, the Commission will have made findings required by the Atomic Energy Act of 1954, as amended (the Act), and the Commission's regulations.

The Commission has made a proposed determination that the amendment request involves no significant hazards consideration. Under the Commission's regulations in Title 10 of the *Code of Federal Regulations* (10 CFR), Section 50.92, this means that operation of the facility in accordance with the proposed amendments would not (1) involve a significant increase in the probability or consequences of an accident previously evaluated; or (2) create the possibility of a new or different kind of accident from any accident previously evaluated; or (3) involve a significant reduction in a margin of safety. As required by 10 CFR 50.91(a), the licensee has provided its analysis of the issue of no significant hazards consideration, which is presented below:

1. Does the proposed change involve a significant increase in the probability of occurrence or consequences of an accident previously evaluated?

Response: No.

Probability of Occurrence of an Accident Previously Evaluated

The ESW system provides cooling water to safety-related components. This is a support function, and malfunctions of the ESW system are not initiators of accidents that have been previously analyzed. The one-time extension of the allowed outage time for an ESW pump does not introduce any failure mechanisms that would initiate a previously analyzed accident.

Consequences of an Accident Previously Evaluated

The ESW pump provides cooling water to safety-related components, a support function. There are two ESW pumps per unit, and only one ESW pump per unit is required to meet the accident analysis. During the ESW pump replacement, the redundant ESW pump will be available to provide cooling water to the safety-related components. Thus, there is no increase in the consequences of an accident previously evaluated.

2. Does the proposed change create the possibility of a new or different kind of accident from any accident previously evaluated?

Response: No.

The ESW system provides cooling water to safety-related components, a support function. The one-time extension of the allowed outage time facilitates the installation of an ESW pump, and of itself does not introduce any mechanisms that would initiate an accident not previously analyzed.

3. Does the proposed change involve a significant reduction in a margin of safety?

Response: No.

The one-time allowed outage time extension does not alter the function of the ESW pump, nor does it change the mode of plant operation. Only one ESW pump per unit is required to mitigate the consequences of an accident. The redundant ESW pump will be operable during the time that the ESW pump is being replaced. A risk assessment has been performed for an allowed outage time of 140 hours. The results of that evaluation demonstrate that the [incremental core damage probability] ICDP

and [incremental large early release probability] ILERP associated with the increase in allowed outage time is within the NUMARC 93–01 guidelines. Therefore, the margin of safety is not significantly reduced.

The NRC staff has reviewed the licensee's analysis and, based on this review, it appears that the three standards of 10 CFR 50.92(c) are satisfied. Therefore, the NRC staff proposes to determine that the amendment request involves no significant hazards consideration.

The Commission is seeking public comments on this proposed determination. Any comments received within 30 days after the date of publication of this notice will be considered in making any final determination.

Normally, the Commission will not issue the amendments until the expiration of the 30-day notice period. However, should circumstances change during the notice period such that failure to act in a timely way would result, for example, in derating or shutdown of the facility, the Commission may issue the license amendments before the expiration of the 30-day notice period, provided that its final determination is that the amendment involves no significant hazards consideration. The final determination will consider all public and State comments received. Should the Commission take this action, it will publish in the **Federal Register** a notice of issuance and provide for opportunity for a hearing after issuance. The Commission expects that the need to take this action will occur very infrequently.

Written comments may be submitted by mail to the Chief, Rules and Directives Branch, Division of Administrative Services, Office of Administration, U.S. Nuclear Regulatory Commission, Washington, DC 20555–0001, and should cite the publication date and page number of this **Federal Register** notice. Written comments may also be delivered to Room 6D59, Two White Flint North, 11545 Rockville Pike, Rockville, Maryland, from 7:30 a.m. to 4:15 p.m. Federal workdays. Documents may be examined, and/or copied for a fee, at the NRC's Public Document Room, located at One White Flint North, 11555 Rockville Pike (first floor), Rockville, Maryland.

The filing of requests for hearing and petitions for leave to intervene is discussed below.

By September 9, 2002, the licensee may file a request for a hearing with respect to issuance of the amendment to the subject facility operating license and any person whose interest may be affected by this proceeding and who wishes to participate as a party in the proceeding must file a written request for a hearing and a petition for leave to intervene. Requests for a hearing and a petition for leave to intervene shall be filed in accordance with the Commission's ''Rules of Practice for Domestic Licensing Proceedings'' in 10 CFR part 2. Interested persons should consult a current copy of 10 CFR 2.714,[1] which is available at the Commission's Public Document Room, located at One White Flint North, 11555 Rockville Pike (first floor), Rockville, Maryland, or electronically on the Internet at the NRC Web site *http://www.nrc.gov/reading-rm/doc-collections/cfr/*. If there are problems in accessing the document, contact the Public Document Room Reference staff at 1–800–397–4209, 301–415–4737, or by e-mail to *pdr@nrc.gov*. If a request for a hearing or petition for leave to intervene is filed by the above date, the Commission or an Atomic Safety and Licensing Board, designated by the Commission or by the Chairman of the Atomic Safety and Licensing Board Panel, will rule on the request and/or petition; and the Secretary or the designated Atomic Safety and Licensing Board will issue a notice of hearing or an appropriate order.

As required by 10 CFR 2.714, a petition for leave to intervene shall set forth with particularity the interest of the petitioner in the proceeding, and how that interest may be affected by the results of the proceeding. The petition should specifically explain the reasons why intervention should be permitted with particular reference to the following factors: (1) The nature of the petitioner's right under the Act to be made party to the proceeding; (2) the nature and extent of the petitioner's property, financial, or other interest in the proceeding; and (3) the possible effect of any order which may be entered in the proceeding on the petitioner's interest. The petition should also identify the specific aspect(s) of the subject matter of the proceeding as to which petitioner wishes to intervene. Any person who has filed a petition for leave to intervene or who has been admitted as a party may amend the petition without requesting leave of the Board up to 15 days prior to the first prehearing conference scheduled in the proceeding, but such an amended petition must satisfy the specificity requirements described above.

Not later than 15 days prior to the first prehearing conference scheduled in the proceeding, a petitioner shall file a supplement to the petition to intervene which must include a list of the contentions which are sought to be litigated in the matter. Each contention must consist of a specific statement of the issue of law or fact to be raised or controverted. In addition, the petitioner shall provide a brief explanation of the bases of the contention and a concise statement of the alleged facts or expert opinion which support the contention and on which the petitioner intends to rely in proving the contention at the hearing. The petitioner must also provide references to those specific sources and documents of which the petitioner is aware and on which the petitioner intends to rely to establish those facts or expert opinion. Petitioner must provide sufficient information to show that a genuine dispute exists with the applicant on a material issue of law or fact. Contentions shall be limited to matters within the scope of the amendment under consideration. The contention must be one which, if proven, would entitle the petitioner to relief. A petitioner who fails to file such a supplement which satisfies these requirements with respect to at least one contention will not be permitted to participate as a party.

Those permitted to intervene become parties to the proceeding, subject to any limitations in the order granting leave to intervene, and have the opportunity to participate fully in the conduct of the hearing, including the opportunity to present evidence and cross-examine witnesses.

If a hearing is requested, the Commission will make a final determination on the issue of no significant hazards consideration. The final determination will serve to decide when the hearing is held.

[1] The most recent version of Title 10 of the Code of Federal Regulations, published January 1, 2002, inadvertently omitted the last sentence of 10 CFR 2.714(d) and subparagraphs (d)(1) and (2), regarding petitions to intervene and contentions. Those provisions are extant and still applicable to petitions to intervene. Those provisions are as follows: ''In all other circumstances, such ruling body or officer shall, in ruling on—

(1) A petition for leave to intervene or a request for hearing, consider the following factors, among other things:

(i) The nature of the petitioner's right under the Act to be made a party to the proceeding.

(ii) The nature and extent of the petitioner's property, financial, or other interest in the proceeding.

(iii) The possible effect of any order that may be entered in the proceeding on the petitioner's interest.

(2) The admissibility of a contention, refuse to admit a contention if:

(i) The contention and supporting material fail to satisfy the requirements of paragraph (b)(2) of this section; or

(ii) The contention, if proven, would be of no consequence in the proceeding because it would not entitle petitioner to relief.''

If the final determination is that the amendment request involves no significant hazards consideration, the Commission may issue the amendment and make it immediately effective, notwithstanding the request for a hearing. Any hearing held would take place after issuance of the amendment.

If the final determination is that the amendment request involves a significant hazards consideration, any hearing held would take place before the issuance of any amendment.

A request for a hearing or a petition for leave to intervene must be filed with the Secretary of the Commission, U.S. Nuclear Regulatory Commission, Washington, DC 20555–0001, Attention: Rulemakings and Adjudications Staff, or may be delivered to the Commission's Public Document Room (PDR), located at One White Flint North, 11555 Rockville Pike (first floor), Rockville, Maryland, by the above date. Because of the continuing disruptions in delivery of mail to United States Government offices, it is requested that petitions for leave to intervene and requests for hearing be transmitted to the Secretary of the Commission either by means of facsimile transmission to 301–415–1101 or by e-mail to *hearingdocket@nrc.gov*. A copy of the petition for leave to intervene and request for hearing should also be sent to the Office of the General Counsel, U.S. Nuclear Regulatory Commission, Washington, DC 20555–0001, and because of continuing disruptions in delivery of mail to United States Government offices, it is requested that copies be transmitted either by means of facsimile transmission to 301–415–3725 or by e-mail to *OGCMailCenter@nrc.gov*. A copy of the request for hearing and petition for leave to intervene should also be sent to David W. Jenkins, Esquire, Indiana Michigan Power Company, Nuclear Generation Group, One Cook Place, Bridgman, Michigan 49106, attorney for the licensee.

Nontimely filings of petitions for leave to intervene, amended petitions, supplemental petitions and/or requests for hearing will not be entertained absent a determination by the Commission, the presiding officer or the presiding Atomic Safety and Licensing Board that the petition and/or request should be granted based upon a balancing of the factors specified in 10 CFR 2.714(a)(1)(i)–(v) and 2.714(d).

For further details with respect to this action, see the application for amendments dated July 26, 2002, which is available for public inspection at the Commission's PDR, located at One White Flint North, 11555 Rockville Pike (first floor), Rockville, Maryland. Publicly available records will be accessible from the Agencywide Documents Access and Management System's (ADAMS) Public Electronic Reading Room on the Internet at the NRC Web site, *http://www.nrc.gov/reading-rm/adams.html*. Persons who do not have access to ADAMS or who encounter problems in accessing the documents located in ADAMS, should contact the NRC PDR Reference staff by telephone at 1–800–397–4209, 301–415–4737, or by e-mail to *pdr@nrc.gov*.

Dated at Rockville, Maryland, this 2nd day of August, 2002.

For the Nuclear Regulatory Commission.

Mohammed Shuaibi,

Acting Section Chief, Section 1, Project Directorate III, Division of Licensing Project Management, Office of Nuclear Reactor Regulation.

[FR Doc. 02–20086 Filed 8–7–02; 8:45 am]

BILLING CODE 7590–01–P

NUCLEAR REGULATORY COMMISSION

Medical Use of Byproduct Material; Announcement of Public Workshop

AGENCY: Nuclear Regulatory Commission.

ACTION: Announcement of public workshop.

SUMMARY: The Nuclear Regulatory Commission (NRC) will be conducting several workshops to inform external stakeholders of the changes made to 10 CFR part 35, Medical Use of Byproduct Material. The purpose of these workshops is to provide stakeholders with the necessary information to promote a successful transition into the revised rule. The revised Part 35 is a risk-informed, and performance-based regulation that focuses on those medical procedures that pose the highest radiological risk to workers, patients, and the public. The revised Part 35 was published in the **Federal Register** on April 24, 2002 (67 FR 20249), and will become effective on October 24, 2002.

DATES: The workshops will be held on September 10, 2002, September 24, 2002, September 28, 2002, October 9, 2002, and October 16, 2002. All workshops will be conducted between 8 a.m. and 4:30 p.m., eastern standard time.

ADDRESSES: *September 10, 2002:* Nuclear Regulatory Commission, Two White Flint North, 11555 Rockville Pike, Rockville, Maryland, 20852. Room: Auditorium. Meeting information: Linda Psyk, (301) 415–0215.

September 24, 2002: Radisson Hotel Valley Forge, 1160 First Avenue, King of Prussia, Pennsylvania, 19406. Hotel information: (610) 337–2000. Meeting information: Christine O'Rourke, (610) 337–5386.

September 28, 2002: The Embassy Suites Hotel and Casino—San Juan, 8000 Tartak Street, Carolina, PR 00979. Hotel information: (787) 791–0505. Meeting information: Hector Bermudez, (404) 562–4734.

Note: This workshop will be held mostly in Spanish.

October 9, 2002: Wyndham Lisle, 3000 Warrenville Road, Lisle, IL 60532. Hotel information: (630) 505–1000. Meeting information: Patricia Pelke, (630) 829–9868.

October 16, 2002: Holiday Inn—Arlington, 1507 N. Watson Road, Hwy 360 at Brown Blvd., Arlington, Texas 76006. Hotel information: (817) 640–7712. Meeting information: Jack Whitten, (817) 860–8197.

FOR FURTHER INFORMATION CONTACT: Linda M. Psyk, Office of Nuclear Material Safety and Safeguards, Nuclear Regulatory Commission, Washington, DC 205555–0001, Telephone (301) 415–0215, or e-mail *lmp1@nrc.gov.*

For those attending the September 10, 2002, workshop, please contact Lucia Lopez in advance at 301–415–7852 to provide information that will facilitate entrance into the building on the day of the meeting. Individuals calling from outside of the Washington, DC metropolitan area may call 1–800–368–5642 and ask for extension 7852.

SUPPLEMENTARY INFORMATION: The workshops will be conducted by means of presentations made by the NRC staff to the attendees. NRC staff will allow time for question and answer sessions.

The workshops are open to the public but the target audience will be members of the regulated medical community who possess a license or permit issued by the NRC, Agreement State or Master Material Licensee, authorizing the use of byproduct material for medical purposes.

Those needing accommodations under the American with Disabilities Act or having special concerns should contact the person listed as point of contact for each meeting.

Dated at Rockville, Maryland, this 1st day of August, 2002.

For the Nuclear Regulatory Commission.

Thomas H. Essig,

Chief, Materials Safety and Inspection Branch, Division of Industrial and Medical Nuclear Safety, Office of Nuclear Materials Safety and Safeguards.

[FR Doc. 02–20084 Filed 8–7–02; 8:45 am]

BILLING CODE 7590–01–P

SECURITIES AND EXCHANGE COMMISSION

[Release No. 35–27558]

Filings Under the Public Utility Holding Company Act of 1935, as Amended (''Act'')

August 2, 2002.

Notice is hereby given that the following filing(s) has/have been made with the Commission pursuant to provisions of the Act and rules promulgated under the Act. All interested persons are referred to the application(s) and/or declaration(s) for complete statements of the proposed transaction(s) summarized below. The application(s) and/or declaration(s) and any amendment(s) is/are available for public inspection through the Commission's Branch of Public Reference.

Interested persons wishing to comment or request a hearing on the application(s) and/or declaration(s) should submit their views in writing by August 26, 2002, to the Secretary, Securities and Exchange Commission, Washington, DC 20549–0609, and serve a copy on the relevant applicant(s) and/or declarant(s) at the address(es) specified below. Proof of service (by affidavit or, in the case of an attorney at law, by certificate) should be filed with the request. Any request for hearing should identify specifically the issues of facts or law that are disputed. A person who so requests will be notified of any hearing, if ordered, and will receive a copy of any notice or order issued in the matter. After August 26, 2002, the application(s) and/or declaration(s), as filed or as amended, may be granted and/or permitted to become effective.

Columbia Insurance Corporation, Ltd. (70–9371)

Columbia Insurance Corporation, Ltd. (''CICL''), a wholly owned captive insurance subsidiary of Columbia Energy Group (''Columbia''), a registered holding company and a wholly owned subsidiary of NiSource Inc. (''NiSource''), also a registered holding company, and Columbia, all located at 801 East 86th Avenue, Merrillville, Indiana 46410–6272, have filed a post-effective amendment to their application-declaration filed previously with the Commission under sections 9(a), 10, and 12(b) of the Act and rules 45 and 54 under the Act.

By order dated October 25, 1996 (HCAR No. 26596) (''1996 Order''), the Commission authorized Columbia to form and capitalize CICL to engage in the reinsurance of predictable losses under automobile and general liability and ''all-risk'' coverage of Columbia. By order dated July 23, 1999 (HCAR No. 27051) (''1999 Order'') the Commission authorized Columbia to expand the reinsurance activities of CICL to include all predictable risks related to the business of Columbia and to establish one or more direct subsidiaries to engage in the proposed reinsurance activities.

CICL and Columbia now propose: (1) In instances where NiSource direct or indirect subsidiaries (''NiSource companies'') do not require evidence of coverage [1] from rated or admitted insurers, that CICL have the ability to underwrite risks of all NiSource companies directly; [2] (2) that CICL underwrite directly corporate deductible or self-insured reimbursement risk, such as workers' compensation coverage of NiSource companies; and (3) that CICL provide controlled unrelated third-party business risk coverage in situations where providing this coverage would directly or indirectly benefit NiSource companies.[3]

CICL and Columbia state that no additional staff would be required to operate CICL in the proposed matter and that the current managers will be retained to provide administrative services. CICL and Columbia further state that, except for the modifications proposed, all other terms, conditions and limitations under the 1996 Order and 1999 Order will continue to apply.

Xcel Energy, Inc. (70–9635)

Xcel Energy, Inc. (''Xcel''), a registered holding company, located at 800 Nicollet Mall, Minneapolis, Minnesota 55402, and its subsidiaries [4] (collectively, ''Applicants'') have filed a post-effective amendment to an application-declaration previously filed with the Commission under sections 6(a), 7, 32 and 33 of the Act and rules 53 and 54 under the Act.

By order dated August 16, 2000 (HCAR No. 27212), the Commission authorized the merger of New Century Energies, Inc. and Northern States Power Company (''NSP'').[5] By order dated August 22, 2000 (HCAR No. 27218) (''Financing Order''), the Commission authorized, through September 30, 2003 (''Authorization Period''), the following: (1) Xcel, Cheyenne, and Black Mountain to engage in external financing; (2) Xcel and certain of its subsidiaries to engage in intrasystem financings, including guarantees; (3) Xcel and certain subsidiaries to enter into hedging transactions for existing and anticipated debt; (4) Xcel and certain subsidiaries to establish, guarantee the obligations of, and borrow the proceeds of the debt and preferred securities issued by, one or more special purpose financing entities; (5) Xcel and any subsidiary to acquire and restructure investments in one or more special purpose entities organized for the purpose of acquiring, financing, and holding the securities of one or more nonutility subsidiaries; and (6) Xcel and any Xcel's nonutility subsidiary to pay dividends out of capital and unearned surplus. In the Financing Order, the Commission reserved jurisdiction over Xcel's request to use the proceeds of the financings to invest in exempt wholesale generators (''EWGs''), as defined in section 32 of the Act, and foreign utility companies (''FUCOs''), as defined in section 33 of the Act, so long as Xcel's ''aggregate investment'' [6] in these entities did not exceed 100 percent of its ''consolidated retained earnings.'' [7]

By supplemental order dated March 7, 2002 (HCAR No. 27494) (''Supplemental Financing Order,'' and together with Financing Order, the ''Financing Orders''), the Commission released jurisdiction over the use of proceeds of certain financing transactions for

[1] CICL and Columbia state that this practice of providing evidence of coverage is known as ''fronting'' and is an accepted practice for underwriting risks where the insured requires evidence of coverage from rated or admitted insurers for business or statutory reasons. They further state that the practice of ''fronting'' creates additional cost to the insured.

[2] CICL and Columbia represent that by acting as a ''front'' company, CICL can eliminate as much as 40 percent of the premium charged on primary risk insurance policies and that this savings would benefit NiSource companies.

[3] CICL proposes to provide performance bonds and construction-related insurance for contractors working on projects for NiSource subsidiaries.

[4] Xcel directly owns six utility subsidiaries that serve electric and/or natural gas customers in 12 states. These six utility subsidiaries are Northern States Power Company, a Minnesota corporation, Northern States Power Company, a Wisconsin corporation, Public Service Company of Colorado, Southwestern Public Service Co., Black Mountain Gas Company (''Black Mountain''), and Cheyenne Light, Fuel and Power Company (''Cheyenne''). Xcel's major nonutility subsidiaries are Viking Gas Transmission Company, NRG Energy, Inc. (''NRG''), Seren Innovations, Inc., e prime, inc., and Eloigne Company.

[5] Following this merger, NSP, as the surviving entity, changed its name to Xcel and registered as a public utility holding company under section 5 of the Act.

[6] ''Aggregate investment'' is defined in rule 53(a)(1)(i) to mean all amounts invested, or committed to be invested, in EWGs and FUCOs, for which there is recourse, directly or indirectly, to the holding company.

[7] ''Consolidated retained earnings'' is defined in rule 53(a)(1)(ii) to mean the average of the consolidated retained earnings of the registered holding company system as reported for the most recent quarterly periods on the holding company's Form 10–K or 10–Q filed under the Securities Exchange Act of 1934, as amended.

investments in EWGs and FUCO up to 100 percent of consolidated retained earnings. Both the Financing Order and the Supplemental Financing Order contain certain commitments, including a commitment by Xcel to maintain a level of common equity that will be at least 30 percent of consolidated total capitalization (''30 percent test'').

As of March 31, 2002, Xcel's common equity was 30.8% of capitalization. Applicants state that there exist, however, circumstances that could result in the common equity of Xcel falling below 30% of capitalization and thus Xcel failing to satisfy the 30% test for a period of time. Applicants further state that Xcel is evaluating the business of NRG and its other businesses and is considering certain restructuring alternatives. Alternatives under consideration include the possible sale of selected generating assets of NRG and exiting other businesses that do not fit strategically with Xcel. Xcel states that it has announced plans to address credit and liquidity issues at NRG. Xcel states that its management and its board of directors (''Board'') have been considering the possible sale of some of the existing generating assets of NRG. Xcel's management has not yet completed its review of bids received to date for many of the NRG assets considered for sale, and the Board has not yet received or committed to management's recommended plan to sell such assets. In addition, Xcel's management and Board have not yet completed their review of other businesses for their strategic fit, and thus has not committed to a plan to sell any such businesses. This commitment is required before NRG's assets or the businesses are classified as ''held for sale.'' [8]

Under generally accepted accounting principles, Xcel evaluates assets classified as ''held for use'' by comparing the book value to the discounted cash flows expected, and evaluates assets classified as ''held for sale'' by comparing the carrying value of the asset to its fair value. Thus, if any asset being reclassified as ''held for sale'' has a fair value which is less than its book value, Xcel will record an impairment charge against income to reduce the carrying value of the asset to its fair value at the time it is classified as ''held for sale.'' Although the actual asset sales may not occur until later periods, this write-down must be made at the time that the asset is determined to be ''held for sale,'' not at the time of the completion of the sale.

Applicants state that, in light of the recent erosion in power pool prices and related asset valuations within the independent power production sector, it is possible that Xcel could recognize an impairment loss as Xcel's Board considers, and later this year potentially approves, a plan to sell certain NRG or other assets. At this time, however, Xcel cannot predict what actions its Board will take regarding any commitment it may make to sell NRG or other assets, or how much, if any, impairment losses Xcel may be required to recognize in future periods as a result of such actions.

Applicants state that there is the possibility that Xcel may be required to record a write-down as a result of future Board actions and the corresponding recognition of an impairment loss under FASB 144 with respect to NRG or other assets being reclassified as ''held for sale.'' As a result of the accounting treatment, Xcel will be required to record an impairment charge at the time that an asset is ''held for sale,'' and in advance of the completion of the sale and application of the net proceeds to the reduction of outstanding indebtedness. Because of the mismatch in timing between the recording of the write-downs and the application of sale proceeds to the reduction of indebtedness, the common equity of Xcel may fall below 30% of its capitalization. In such event, the conditions to the authorization granted in the Financing Orders would not be satisfied.

Applicants expect that any reduction of Xcel's common equity ratio below 30% would be temporary. Applicants state that upon consummation of the sale of generating assets of NRG and other businesses, the outstanding indebtedness of Xcel and its subsidiaries will be reduced—either by the application of net proceeds of such sale to repay outstanding indebtedness at NRG or as a result of the purchaser of a project assuming the project-related indebtedness.

Applicants request authority to engage in the financing transactions authorized in the Financing Orders at a time when the Xcel 30 percent test is not met, provided that the common equity of Xcel, as reflected on its most recent Form 10–K or Form 10–Q and as adjusted to reflect subsequent events that affect capitalization, be at least 24 percent of total capitalization of Xcel and provided that the Applicants shall not engage in any of the financing transactions authorized in the Financing Orders at any time after June 30, 2003 unless at such time the Xcel 30 percent test is met.

Applicants represent that, with the exception of this proposed revision to the Financing Orders, all the terms and conditions of the Financing Orders will remain in effect. Applicants further represent that the net proceeds of the common stock of between $500 million and $800 million during 2002 issued by Xcel pursuant to the authorizations granted in the Financing Orders will be applied to repay debt of Xcel, NRG, and/or one or more of Xcel's subsidiaries.

The Southern Company, et al. (70–10073)

The Southern Company (''Southern''), 270 Peachtree Street, NW., Atlanta, Georgia 30303, a registered holding company, and Georgia Power Company (''Georgia Power''), 241 Ralph McGill Boulevard, NE., Atlanta, Georgia 30308, a wholly owned public-utility company subsidiary of Southern (collectively, ''Applicants''), have filed an application-declaration under sections 6(a), 7, 9(a), 10 and 12(b) of the Act and rules 45 and 54 under the Act.

Southern and Georgia Power propose to organize and acquire, indirectly and directly, respectively, all the common stock of one or more special purpose subsidiaries (''Subsidiaries'') for the purpose of effecting various financing transactions described below through June 30, 2006. Applicants state that, by using the Subsidiaries in these transactions, they would have greater access to new sources of capital and may reap certain tax benefits.

Applicants request authority to issue and sell, through the Subsidiaries, up to an aggregate amount of $650 million in preferred securities (''Preferred Securities''). Each of the Preferred Securities would have a specified par amount, stated value amount, liquidation amount, or preference.

The Subsidiaries may be organized in the following corporate forms: (1) Limited liability companies in any state jurisdiction considered advantageous by Georgia Power; (2) a limited partnership in any state jurisdiction considered advantageous by Georgia Power; (3) a business trust in any state jurisdiction considered advantageous by Georgia Power; or (4) any other entity or structure, foreign or domestic, that is considered advantageous by Georgia Power. In the event that any Subsidiary is organized as a limited liability company, Applicants may organize a second special purpose wholly-owned

[8] Applicants represent that the Statement of Financial Accounting Standards No. 144, Accounting for the Impairment or Disposal of Long-Lived Assets (''FASB 144'') sets forth the criteria for classification as ''held for sale''—including, among others, (a) management, having the authority to approve the action, commits to a plan to sell the asset, (b) the asset is being actively marketed for sale and (c) the sale of the asset is expected to be completed within one year.

subsidiary (''Investment Subsidiary'') for the purpose of acquiring and holding Subsidiary membership interests to comply with any requirements that a limited liability company have at least two members. In the event that any Subsidiary is organized as a limited partnership, Georgia Power may organize an Investment Subsidiary to act as the general partner of the Subsidiary. Further, Georgia Power may acquire, directly or indirectly through an Investment Subsidiary, a limited partnership interest in a Subsidiary to comply with any requirements that a Subsidiary would have a limited partner.

Georgia Power and/or an Investment Subsidiary would acquire all the common stock or all of the general partnership or other common equity interests of any Subsidiary for an amount not less than the minimum required by law and not exceeding twenty-one percent of the total equity capitalization of any Subsidiary (''Equity Contribution'').[9] Georgia Power may issue and sell to any Subsidiary, at any time, or from time to time, in one or more series, subordinated debentures, promissory notes or other debt instruments (''Notes'') under an indenture or other document. The Subsidiary would apply both the Equity Contribution and the proceeds from the sale of Preferred Securities to purchase Notes. Alternatively, Georgia Power may enter a loan agreement with any Subsidiary, under which the Subsidiary would loan to Georgia Power (''Loans'') both the Equity Contribution and the proceeds from the sale of the Preferred Securities and Georgia Power would issue Notes to the Subsidiary evidencing the borrowings.

Applicants request authority for Georgia Power to guarantee: (1) Payment of dividends or distributions on the Preferred Securities of any Subsidiary if, and to the extent, that the Subsidiary has legally available funds; (2) payments to the Preferred Securities holders of amounts due upon liquidation of a Subsidiary or redemption of the Preferred Securities; and (3) certain additional amounts that may be payable regarding the Preferred Securities (collectively, ''Guaranties'').

Notes would have terms of up to fifty years. Prior to maturity, Georgia Power would pay interest on the Notes at a rate equal to the dividend or distribution rate on the related series of Preferred Securities. The dividend or distribution rate may be either a fixed rate or an adjustable rate to be determined on a periodic basis by auction or remarketing procedures according to a formula based on certain reference rates, or by other predetermined method. Interest payments would constitute each Subsidiary's only income and would be used to pay dividends or distributions on the Preferred Securities and dividends or distributions on the common stock or the general partnership or other common equity interests of the Subsidiary. Dividend payments or distributions on the Preferred Securities would be made on a monthly or other periodic basis and must be made to the extent that the Subsidiary has legally available funds and cash. However, Georgia Power may have the right to defer payment of interest on Notes for up to five or more years. Each Subsidiary would have the parallel right to defer dividend payments or distributions on the related series of Preferred Securities for up to five or more years, provided that if dividends or distributions on any series of Preferred Securities are not paid for up to 18 or more consecutive months, then the Preferred Securities holders may have the right to appoint a trustee, special general partner or other special representative to enforce the Subsidiary's rights under the Note or Guarantee. The dividend or distribution rates, payment dates, redemption and other similar provisions of each series of Preferred Securities would be substantially identical to the interest rates, payment dates, redemption and other provisions of the related Notes issued by Georgia Power.

The Notes and related Guaranties would be subordinate to all other existing and future unsubordinated indebtedness for borrowed money of Georgia Power and may have no cross-default provisions with respect to other indebtedness of Georgia Power. However, Georgia Power may be prohibited from declaring and paying dividends on its outstanding capital stock and making payments related to *pari passu* debt unless all payments then due under the Notes and Guaranties, without giving effect to the deferral rights, have been made.

It is expected that Georgia Power's interest payments on the Notes would be deductible for federal income tax purposes and that each Subsidiary would be treated as either a partnership or a passive grantor trust for federal income tax purposes. Consequently, holders of the Preferred Securities, Georgia Power and any Investment Subsidiary would be deemed to have received distributions from their ownership interests in any Subsidiary and would not be entitled to any ''dividends received deduction'' under the Internal Revenue Code.

Any series of Preferred Securities may be redeemable at the option of the issuing Subsidiary, with the consent or at the direction of Georgia Power, at a price equal to the Preferred Securities' par amount, stated value amount, liquidation amount, or preference, plus any accrued and unpaid dividends or distributions. The Preferred Securities may be redeemable at any time after a specified date not later than approximately ten years from their date of issuance or upon the occurrence of certain events. These events may be that: (1) The Subsidiary is required to withhold or deduct certain amounts in connection with dividend, distribution or other payments or is subject to federal income tax on interest received on the Notes issued to the Subsidiary; (2) it is determined that the interest payment by Georgia Power on the related Notes are not deductible for income tax purposes; or (3) the Subsidiary becomes subject to regulation as an ''investment company'' under the Investment Company Act of 1940, as amended. Any series of Preferred Securities may also be subject to mandatory redemption upon the occurrence of certain events. Georgia Power also may have the right in certain cases or in its discretion to exchange the Preferred Securities of any Subsidiary for the Notes or other junior subordinated debt issued to the Subsidiary.

In the event that any Subsidiary is required to withhold or deduct certain amounts in connection with dividend, distribution or other payments, it may also be obligated to ''gross up'' such payments so that the Preferred Securities holders would receive the same payment after such withholding or deduction as they would have received if no withholding or deduction were required. In such event, Georgia Power's obligations under its related Note and Guaranty may also extend to the ''gross up'' obligation. In addition, if any Subsidiary is required to pay taxes on income derived from interest payments on Notes issued to it, Georgia Power may be required to pay additional interest on the related Notes in an amount equal to the tax obligation.

In the event of any voluntary or involuntary liquidation, dissolution or winding up of any Subsidiary, the holders of the Preferred Securities would be entitled to receive, out of the assets of the Subsidiary available for distribution to its shareholders, partners or other owners, an amount equal to the par, stated value or liquidation amount or preference of the Preferred Securities,

[9] The remaining equity would be obtained through the purchase of the Preferred Securities.

plus any accrued and unpaid dividends or distributions.

Applicants state that each Subsidiary's activities would be limited to issuing and selling Preferred Securities and lending to Georgia Power or an Investment Subsidiary the proceeds from those sales and the Equity Contributions and any related activities. Applicants further state that a Subsidiary's common stock, general partnership or other common equity interests are not transferable, except to certain permitted successors, that its business and affairs would be managed and controlled by Georgia Power and/or its Investment Subsidiary or successor, and that Georgia Power or its successor would pay all expenses of the Subsidiary.

The distribution rate to be borne by the Preferred Securities and the interest rate on the Notes would not exceed the greater of 300 basis points over U.S. Treasury securities having comparable maturities or a gross spread over U.S. Treasury securities that is consistent with similar securities having comparable maturities and credit quality issued by other companies.

Georgia Power would use the proceeds from the sale of the proposed securities to fund its ongoing construction program, pay scheduled maturities and/or refundings of its securities, repay short-term indebtedness to the extent outstanding, and for other general corporate purposes.

For the Commission, by the Division of Investment Management, under delegated authority.

Margaret H. McFarland,

Deputy Secretary.

[FR Doc. 02–20067 Filed 8–7–02; 8:45 am]

BILLING CODE 8010–01–P

SECURITIES AND EXCHANGE COMMISSION

[Release No. 34–46305; File No. SR–AMEX–2001–106]

Self-Regulatory Organizations; American Stock Exchange LLC; Order Granting Approval to a Proposed Rule Change and Amendment No. 1 Thereto and Notice of Filing and Order Granting Accelerated Approval to Amendment Nos. 2 and 3 Thereto Relating to Unlisted Trading Privileges in Nasdaq National Market Securities

August 2, 2002.

I. Introduction and Description of the Proposal

On December 17, 2001, the American Stock Exchange LLC (''Amex'' or ''Exchange'') filed with the Securities and Exchange Commission (''SEC'' or ''Commission'') pursuant to Section 19(b)(1) of the Securities Exchange Act of 1934 (''Act'')[1] and Rule 19b–4 thereunder,[2] a proposed rule change to adopt Amex Rule 118 and to amend Amex Rules 1, 3, 7, 24, 115, 170, 175, 190, 205 and Section 950 of the Amex Company Guide to provide for the trading of Nasdaq Stock Market, Inc. (''Nasdaq'') National Market (''NNM'') securities pursuant to unlisted trading privileges (''UTP''). On January 14, 2002, the Amex filed Amendment No. 1 to the proposed rule change.[3] The proposed rule change, as amended by Amendment No. 1, was published in the **Federal Register** on February 6, 2002.[4] The Commission received two comment letters and a response. On April 19, 2002, the Amex filed Amendment No. 2 to the proposed rule change[5] and on July 26, 2002 filed Amendment No. 3 to the proposed rule change.[6] This order approves the proposed rule change, as amended. In addition, the Commission is publishing notice to solicit comment on and is simultaneously approving, on an accelerated basis, Amendment Nos. 2 and 3 to the proposal.

The Exchange is proposing rules to accommodate trading of NNM securities on the Exchange pursuant to UTP, in accordance with provisions of the Joint Self-Regulatory Organization Plan Governing the Collection, Consolidation and Dissemination of Quotation and Transaction Information for Nasdaq-Listed Securities Traded on Exchanges on an Unlisted Trading Privileges Basis (''Plan''). The Exchange is a participant in the Plan. Exchange trading in NNM securities will be governed primarily by Amex Rule 118, Trading in Nasdaq National Market Securities. The Exchange intends to limit Nasdaq UTP trading to NNM issues and not to include Nasdaq SmallCap issues at this time.

Proposed Rule 118:

(a) Defines NNM security and Nasdaq System.

(b) States that the Exchange Constitution and rules apply to trading NNM securities, except to the extent that Rule 118 governs or unless the context otherwise requires.

(c) Requires Amex specialists to permit Nasdaq market makers direct telephone access to the specialist post and allows Nasdaq market makers to use telephone access to transmit orders for execution on the Amex.

(d) Provides that quotations distributed by Nasdaq market makers will be displayed on the Floor, that Amex specialists may send orders from the Floor for execution via telephone to Nasdaq market makers, and that quotations in Nasdaq securities from other market centers have no standing on the Floor.

(e) Provides that the Exchange will report intermarket transactions in which the Exchange member is the seller to the Nasdaq UTP Securities Information Processor (''SIP'').

(f) Provides that intermarket transactions in NNM securities must be compared and cleared through an Exchange member or member organization or the clearing firm of a member or member organization.

(g) Provides that specialists in Nasdaq securities must be registered and qualified, and includes specified testing and training requirements.[7]

[1] 15 U.S.C. 78s(b)(1).

[2] 17 CFR 240.19b–4.

[3] *See* letter from Geraldine Brindisi, Vice President and Corporate Secretary, Amex, to Katherine England, Assistant Director, Division of Market Regulation (''Division''), Commission (January 11, 2002) (''Amendment No. 1'').

[4] *See* Securities Exchange Act Release No. 45365 (January 30, 2002), 67 FR 5626.

[5] *See* letter from Claire P. McGrath, Senior Vice President and Deputy General Counsel, Amex, to Katherine England, Assistant Director, Division, Commission (April 18, 2002) (''Amendment No. 2''). In Amendment No. 2, the Exchange amended the proposed Amex Rule 118, Trading in Nasdaq National Market Securities, to provide that orders sent via telephone from other market centers to the Floor and executed by the Amex specialist must be compared and cleared through an Exchange member or member organization or the clearing firm of a member or member organization.

[6] *See* letter from Claire P. McGrath, Senior Vice President and Deputy General Counsel, Amex, to Nancy Sanow, Assistant Director, Division, Commission (July 25, 2002) (''Amendment No. 3''). In Amendment No. 3, the Exchange deleted formerly proposed Commentary .01 to Rule 175, Specialist Prohibitions. *See* Securities Exchange Act Release No. 46213 (July 16, 2002), 67 FR 48232 (July 23, 2002). In addition, in Commentary .01 to Rule 118, Trading in Nasdaq National Market Securities, the Exchange deleted a formerly proposed reference to Commentary .01 to Rule 175 due to deletion of the referenced Commentary by Amendment No. 3. Finally, the Exchange deleted formerly proposed Commentary .05 to Rule 205, Manner of Executing Odd-Lot Orders, because of a related Exchange rule filing addressing odd-lot executions in NNM securities. *See* Securities Exchange Act Release No. 46148 (June 28, 2002), 67 FR 45773 (July 10, 2002) (File No. SR–Amex–2002–56). SR–Amex–2002–56 proposes to add a new subsection (j) to Rule 118 that deals specifically with executions of odd-lot orders in Nasdaq securities.

[7] The Commission notes that under Amex Rule 175, specialists registered as such in securities admitted to dealings pursuant to UTP may be affiliated with specialists, registered options traders, and other market makers in options on the specialty UTP securities provided that information barriers are established, approved, and maintained pursuant to Amex Rule 193 between the stock and options specialist units. However, side-by-side trading of stocks and related options is not permitted. *See* Securities Exchange Act Release No. 46213 (July 16, 2002).

(h) Provides for a disclaimer of Exchange liability with respect to transactions on the Exchange in NNM securities, in accordance with Article IV, Section 1 (e) of the Exchange Constitution.

(i) Provides that the specialist financial requirements of Rule 171, Commentary .04 apply to specialists in Nasdaq securities. Rule 171, Commentary .04 currently provides that a specialist in a security principally traded or priced in another U.S. market must maintain a cash or net liquid asset position sufficient to assume a position of 20 trading units. For Amex-listed securities, the requirement is 60 trading units.

The following existing Amex rules also would be amended to accommodate Nasdaq UTP trading: [8]

Rule 1, Comm. .05

Provides that the hours of business for securities traded on the Exchange pursuant to UTP are the same as the hours of trading in the primary market for such securities.[9]

Rule 3

Exempts trading with non-member Nasdaq market makers from the prohibition on trading with non-members.

Rule 7

States that Rule 7, which includes the short selling ''tick-test'' restriction of Rule 10a–1 under the Act, does not apply to transactions in NNM securities effected under Rule 118.[10]

Rule 24

Exempts NNM securities from the rule's block transactions restrictions. Rule 24 states that, after learning about a trade executed or about to be executed on the Floor involving 10,000 shares or more, a member or employee of a member or member organization cannot initiate or transmit to the Floor an order for the account of a member or member organization for two minutes following the print of the trade on the tape. The Exchange does not believe it is appropriate to apply the restrictions in Rule 24 to NNM securities, for which Amex would not be the primary market.[11]

Rule 115

Amends Commentary .01(3) to provide for notification to the SIP for NNM securities in the event unusual market activity or an unusual condition exists that prevents the specialist from updating quotations on a timely basis.

Rule 170, Comm. .11

Exempts specialists from Rule 170, paragraph (e) and specified Commentary to the rule. Rule 170(e) restricts members or persons affiliated with a specialist or the specialist's member organization from purchasing or selling a specialty security for an account in which such person or party has an interest, except when the specialist is acting pursuant to Rule 170(c) or (d) (*e.g.,* is engaged in dealings reasonably necessary to maintain a fair and orderly market, and to maintain price continuity and reasonable depth). Amex as a primary market for listed securities imposes the requirements of Amex Rule 170. However, the proposed exemption provides regulatory parity with other markets trading Nasdaq securities.[12] The Exchange notes that the requirements of Rules 150 and 155 will apply to orders entered with a specialist in NNM securities from affiliates of the specialist.

Rule 190

Provides that paragraph (b) shall not apply to NNM securities. Paragraph (b) prohibits specialists from accepting an order to buy or sell the specialist's specialty securities directly from specified entities, including the issuer; an officer, director or 10% shareholder in the issuer; a pension fund; or a bank, insurance company or investment company. The Exchange does not view the potential abuses addressed by paragraph (b) as raised by trading in NNM securities insofar as the Exchange would not be the primary market for these securities, and restrictions such as those in Rule 190(b) are not imposed by regional exchanges or Nasdaq.

Company Guide

Section 950

Adds Commentary .01 to state that the Exchange may trade NNM securities pursuant to UTP. This provision would distinguish Nasdaq UTP trading from Amex securities that were admitted to UTP and that, for the most part, were traded on the Amex before 1934.

II. Summary of Comments and Response to Comments

The Commission received a comment letter on the proposed rule change from Knight Trading Group, Inc. (''Knight'') on February 28, 2002,[13] which expressed concern that the proposal will disrupt the national market system and undermine the Firm Quote Rule.[14] Specifically, Knight argued in its comment letter that the proposal will disrupt the national market system by permitting Amex members to trade NNM securities without providing automatic execution and thereby delay executions. Knight asserts that all

[8] The Commission has separately approved allocation procedures applicable to NNM securities. *See* Securities Exchange Act Release No. 45698 (April 5, 2002), 67 FR 18051 (April 12, 2002).

[9] The Commission notes that the Plan defines Primary Market. However, in Plan Amendment No. 13, the Plan participants propose to delete the Primary Market definition and add a Listing Market definition. If the Primary Market definition is ultimately deleted and the Listing Market definition is added to the Plan, the Exchange should reflect this change in its rules where applicable. *See* Securities Exchange Act Release No. 46139 (June 28, 2002), 67 FR 44888 (July 5, 2002) (Notice of Filing and Partial Summary Effectiveness of Amendment No. 13 of the Plan).

[10] The Commission notes that the proposed amendment to Amex Rule 7, Short Sales, does not require an exemption from the Commission's short sale rule, Rule 10a–1, since Nasdaq securities currently are excluded from the Rule. *See* 17 CFR 240.10a–1(a)(1)(ii). However, Nasdaq has applied to become a national securities exchange. *See* Securities Exchange Act Release No. 44396 (June 7, 2001), 66 FR 31952 (June 13, 2001). If Nasdaq becomes a registered national securities exchange, Nasdaq securities will be exchange listed and subparagraph (ii) of Rule 10a–1 will no longer be available. Accordingly, the Exchange specialists trading Nasdaq securities would be subject to Rule 10a–1 unless the Exchange obtains an exemption from the Rule. Nasdaq has requested an exemption from Rule 10a–1.

[11] While Nasdaq UTP trading on the Amex will be exempt from Amex Rule 24, the Commission notes that, with respect to trading in all securities on the Exchange, including Nasdaq securities traded pursuant to UTP, it is a violation of just and equitable principles of trade, *see* Amex Constitution Article V, Section 4(h), for a person with material non-public information of an imminent transaction in a security to take advantage of that information by effecting trades in that security or related securities. The Exchange's frontrunning prohibition currently applies not only to trading options ahead of a block of stock, but also to trading activity in the same stock (''stock to stock frontrunning''). The Exchange has procedures in place to examine for stock to stock frontrunning activity, and these procedures will be applied to Amex trading in Nasdaq securities traded pursuant to UTP. *See* letter from Richard T. Chase, Executive Vice President, Member Firm Regulation, Amex, to Nancy Sanow, Assistant Director, Division, Commission, dated July 31, 2002.

[12] The Commission notes that Amex members remain subject to Section 11(a) under the Act, 15 U.S.C. 78k, and the rules thereunder.

[13] *See* Letter from Michael T. Dorsey, Senior Vice President, General Counsel, and Secretary, Knight, to Commission (February 28, 2002). In its comment letter, Knight incorporated by reference its comment letters previously filed with the Commission with regard to the expansion of the issues trading by means of the Plan as well as its comments regarding the admission of new entrants to the Plan. *See* Letter from Michael T. Dorsey (''Dorsey''), Senior Vice President and General Counsel (''SVP/GC''), Knight, to Jonathan Katz (''Katz''), Secretary, Commission (December 19, 2000); Letter from Dorsey, SVP/GC, Knight, to Katz, Secretary, Commission (December 13, 2000); Letter from Dorsey, SVP/GC, Knight, to Katz, Secretary, Commission (November 1, 2000); *see also* Letter from Richard B. Levin, Assistant General Counsel and Regulatory Affairs Officer, Knight, to Katz, Secretary, Commission (April 17, 2001).

[14] 17 CFR 240.11Ac1–1.

Nasdaq market participants currently provide automatic execution through either SuperSOES or Select Net.[15] Knight also contended that the proposal will permit Amex members to obtain an unfair informational advantage by monitoring the trading and quoting activity of NNM securities without accepting automatic executions. Knight also asserted that the proposal will unfairly require market participants to provide Amex specialists telephonic access to their quotes, while orders sent to the Amex by Nasdaq market makers will not be afforded any standing on the Amex floor. Further, Knight argued that the proposal will undermine the Firm Quote Rule[16] because UTP exchange members are not required to provide automatic execution against their quotes and can enter orders that lock and cross markets. Knight states ''the Commission should not permit AMEX members to trade Nasdaq issues without being subject to automatic executions.'' Knight further argues that the proposal ''enables AMEX members to adhere to auction market principles even though this behavior will disrupt the fair and orderly trading of Nasdaq issues within the national market system.''

The Commission received a response to Knight's comment letter from the Amex on May 21, 2002,[17] which addressed various points raised in Knight's comment letter. First, Amex argued that trading by telephone will not delay executions because the Amex does not anticipate a significant proportion of orders being telephoned to or from Amex specialists. Instead, the Amex anticipates that most orders for Nasdaq securities will be sent through the Common Message Switch for routing to specialists' posts. Moreover, Amex believes that trading by telephone is permissible since it is explicitly contemplated under the Plan. Amex also noted that Knight's argument is unfounded because of the Nasdaq rule that automatically permits SuperSOES to trade through the quotes of Plan participants. Second, the Amex argued that UTP specialists will have no informational advantage by slowing the execution process, viewing quotation messages, and adjusting their quotes and positions accordingly. Amex asserted that Amex UTP specialists will not have any additional information that is not also available to other Plan participants and Nasdaq market makers. Finally, Amex averred that UTP trading will not have a detrimental impact on the Firm Quote Rule[18] and that Knight's assertion otherwise is unsupported. Amex stated that any increase in the number of inter-market locked and crossed markets subsequent to the Commission approving the Amex's UTP trading rules would likely be caused by Nasdaq's trading rules. Specifically, Amex referenced the Nasdaq trading rule that permits trading through of quotes of UTP participants that do not use Nasdaq automatic execution systems.

The Commission also received a comment letter from a Congressional panel (''Panel'') on May 30, 2002.[19] In its comment letter, the Panel expressed its concern that the proposal would not be ''consistent with the maintenance of fair and orderly markets and the protection of investors'' as is required by section 12(f)(2) of the Act.[20] Specifically, the Panel argued that the lack of an automatic execution requirement could increase the incidence of ''locked'' and ''crossed'' markets. Moreover, the Panel stated that without automatic executions the result would be an unequal playing field favoring those market participants with the least sophisticated technology. Such unsophisticated market participants could gain an advantage by monitoring market activity without being subject to automatic executions. As discussed above, the Amex substantially addressed the Panel's comments in the Amex response to Knight's comment letter.

III. Discussion

The Commission finds that the proposed rule change, as amended, is consistent with the Act and the rules and regulations promulgated thereunder applicable to a national securities exchange, and, in particular, with the requirements of Section 6(b)[21] of the Act. Specifically, the Commission finds that approval of the proposed rule change is consistent with Section 6(b)(5)[22] of the Act because it is designed to promote just and equitable principles of trade, to foster cooperation and coordination with persons engaged in facilitating transactions in securities, and to remove impediments to and perfect the mechanism of a free and open market and a national market system.[23]

Moreover, the Commission, pursuant to section 19(b)(2)[24] of the Act, finds good cause for approving Amendment Nos. 2 and 3 prior to the thirtieth day after the date of publication of notice thereof in the **Federal Register**. The Commission notes that granting accelerated approval to Amendment No. 2 will allow the Amex to implement its intermarket trade comparison and clearing procedures and commence trading of NNM securities on a UTP basis in a timely fashion. In addition, Amex discussed the substance of Amendment No. 2 with the Plan Participants at meetings of the Operating Committee. The Commission notes that granting accelerated approval to Amendment No. 3 will harmonize the instant proposal with other Amex proposals that have been approved or will be contemporaneously approved.

The Commission has carefully considered all the issues raised by the commenters and is not persuaded by their arguments. Knight and the Panel essentially argued that accepting automatic execution is a pre-condition to trading Nasdaq securities pursuant to UTP and the only way to comply with the Firm Quote Rule.[25] In addition, the commenters argued that telephone access provides Amex specialists an advantage over other Plan participants who are required to accept automatic execution. According to Knight, an Amex specialist could ''obtain an unfair informational advantage by monitoring the trading and quoting activity of Nasdaq issues in the national market system without accepting automatic executions like all other market participants trading Nasdaq issues.''[26]

First, participating in Nasdaq's automatic execution facility is not a requirement for exchanges to trade Nasdaq issues. The Commission has not required competitors to participate in a Nasdaq trading facility or required Nasdaq to provide access to its trading facilities to its competitors. Each of the UTP participants has independently decided whether to participate in Nasdaq's automatic execution facility.

[15] The Commission notes that SelectNet is not, in fact, an automatic execution system.

[16] 17 CFR 240.11Ac1–1.

[17] *See* letter from Michael J. Ryan, Jr., Executive Vice President & General Counsel, Amex, to Katz, Secretary, Commission (May 21, 2002).

[18] 17 CFR 240.11Ac1–1.

[19] *See* letter from Congresswoman Judy Biggert, Congressmen Mike Ferguson, Walter B. Jones, Mike Rogers, Ed Royce, and Patrick Tiberi to The Honorable Harvey Pitt, Chairman, Commission (May 29, 2002).

[20] 15 U.S.C. 78l(f)(2).

[21] 15 U.S.C. 78f(b). In approving this proposal, the Commission has considered the proposed rule's impact on efficiency, competition and capital formation. 15 U.S.C. 78c(f).

[22] 15 U.S.C. 78f(b)(5).

[23] The Amex has informed the Commission that its systems are not capable of reporting or clearing transactions in sub pennies. If an Amex specialist were to effect a trade in sub pennies, the Amex has represented that it will advise specialists to effect the trade with the customer at a rounded price. *See* Information Circular (7/02). The Commission expects the Amex to address this system limitation in the near future.

[24] 15 U.S.C. 78s(b)(2).

[25] 17 CFR 240.11Ac1–1.

[26] *See* Knight letter page 2.

Two of the participants, in addition to the Amex, have chosen not to participate—the Philadelphia Stock Exchange, Inc. and the Cincinnati Stock Exchange, Inc. Second, providing automatic executions—rather than operating an auction market—is not a precondition to competing in Nasdaq securities. The very essence of UTP is to permit competition among markets and market structures. Requiring one market structure for trading Nasdaq securities would defeat this purpose. Third, while compliance with the Firm Quote Rule [27] is easier to monitor in an automatic execution environment, the Firm Quote Rule does not require market participants to be subject to automatic execution. Indeed, the Firm Quote Rule has always applied to exchange trading as well as over-the-counter trading.

The Commission is unconvinced by the assertion of Knight and the Panel that Amex specialists will have an informational advantage because they will be able to monitor trading and quoting activity of Nasdaq securities while not being subject to automatic execution. Amex specialists, as well as the specialists of all other Plan participants, will be able to see the market for Nasdaq securities. They will have no special advantage. As noted above, two other participants have chosen not to participate in Nasdaq's automatic execution system. Furthermore, Amex specialists must comply with the Firm Quote Rule. If an Amex specialist quotes the best bid or offer for a security and receives an order, it must fill the order in compliance with the Firm Quote Rule. To be sure, it will generally take longer to receive a fill from an Amex specialist than it will to receive a fill from a Nasdaq member that is subject to automatic execution. This does not, however, make trading pursuant to UTP under the Plan impermissible under the Act and the rules and regulations thereunder.

In November of 2001, the Commission approved the most recent amendment to the Plan.[28] Among other things, the 12th Amendment extended UTP to all Nasdaq securities, SmallCap as well as NNM. The 12th Amendment also admitted the Amex as a participant. As has been the case since the inception of the Plan, exchange participants are required to provide telephone access to Nasdaq market makers. This proposed rule change, SR–Amex–2001–106, spells out the rules that an Amex specialist must follow if it trades Nasdaq securities on the Exchange. The commenters' concerns appear to be with the extension of UTP to the regional exchanges and the choice of some of the regional exchanges not to participate in Nasdaq's automated execution system. The Commission believes that the commenters' concerns are more appropriately raised in the context of the approval and amendment process of the Plan, rather than in the context of a single Plan participant's rules related to trading under the Plan and that are consistent with the Plan.

IV. Solicitation of Comments

Interested persons are invited to submit written data, views and arguments concerning Amendment Nos. 2 and 3, including whether the amendments are consistent with the Act. Persons making written submissions should file six copies thereof with the Secretary, Securities and Exchange Commission, 450 Fifth Street, NW., Washington, DC 20549–0609. Copies of the submission, all subsequent amendments, all written statements with respect to the proposed rule change that are filed with the Commission, and all written communications relating to the proposed rule change between the Commission and any person, other than those that may be withheld from the public in accordance with the provisions of 5 U.S.C. 552, will be available for inspection and copying in the Commission's Public Reference Room. Copies of such filing will also be available for inspection and copying at the principal office of the Amex. All submissions should refer to File No. SR–Amex–2001–106 and should be submitted by August 29, 2002.

V. Conclusion

It is therefore ordered, pursuant to Section 19(b)(2) of the Act,[29] that the proposed rule change (SR–Amex–2001–106), as amended, is hereby approved on an accelerated basis.

For the Commission, by the Division of Market Regulation, pursuant to delegated authority.[30]

Margaret H. McFarland,

Deputy Secretary.

[FR Doc. 02–20068 Filed 8–7–02; 8:45 am]

BILLING CODE 8010–01–P

[27] 17 CFR 240.11Ac1–1.

[28] *See* Securities Exchange Act Release No. 45081 (November 19, 2001), 66 FR 59273 (November 27, 2001).

[29] 15 U.S.C. 78s(b)(2).

[30] 17 CFR 200.30–2(a)(12).

SECURITIES AND EXCHANGE COMMISSION

[Release No. 34–46297; File No. SR–CHX–2002–25]

Self-Regulatory Organizations; Notice of Filing and Immediate Effectiveness of Proposed Rule Change by the Chicago Stock Exchange, Inc. Relating to Membership Dues and Fees

August 1, 2002.

Pursuant to section 19(b)(1) of the Securities Exchange Act of 1934 (''Act'')[1] and Rule 19b4 thereunder,[2] notice hereby is given that on July 30, 2002, the Chicago Stock Exchange, Inc. (''CHX'') filed with the Securities and Exchange Commission the proposed rule change as described in Items I, II and III below, which the CHX has prepared. The Commission is publishing this notice to solicit comments on the proposed rule change from interested persons.

I. Self-Regulatory Organization's Statement of the Terms of Substance of the Proposed Rule Change

The CHX proposes to amend its membership dues and fees schedule effective through December 31, 2002, to provide for continued assessment of a marketing fee in instances where transactions in a subject issue meet certain criteria, described below. The text of the proposed rule change is available at the CHX and at the Commission.

II. Self-Regulatory Organization's Statement of the Purpose of, and Statutory Basis for, the Proposed Rule Change

In its filing with the Commission, the CHX included statements concerning the purpose of and basis for the proposed rule change and discussed any comments it had received regarding the proposed rule change. The text of these statements may be examined at the places specified in Item IV below. The CHX has prepared summaries, set forth in Sections A, B, and C below, of the most significant aspects of such statements.

A. Self-Regulatory Organization's Statement of the Purpose of, and Statutory Basis for, the Proposed Rule Change

1. Purpose

The proposed change to the CHX fee schedule would provide for continued assessment of a marketing fee, in an amount equal to $.01 per share,

[1] 15 U.S.C. 78s(b)(1).

[2] 17 CFR 240.19b–4.

applicable to transactions occurring on or before December 31, 2002. The marketing fee would apply only to ''Subject Transactions'' [3] in ''Subject Issues'' [4] and would not be assessed if the specialist trading the Subject Issue elected to forego collection of the marketing fee.

The CHX currently assesses a marketing fee under a provision of the CHX fee schedule that, by its terms, expires on July 31, 2002.[5] Under the system currently in place, the CHX calculates, bills, and collects the marketing fee and remits the proceeds to the specialist firm trading the Subject Issue. The specialist firm then distributes the funds to order-sending firms in accordance with its payment-for-order flow arrangements relating to the Subject Issue (and possibly also to market makers who contribute to market share growth in certain instances).[6] The remaining undistributed funds in excess of $1000 are refunded, on a quarterly basis, to the paying parties pro rata, in proportion to the fees they have paid.

The CHX notes that the proposed marketing fee provision does not differ from the previous versions, except that it would extend application of the marketing fee through December 31, 2002. The CHX intends that the continued imposition of the marketing fee will allocate equitably the financial burden of seeking order flow for Subject Issues. According to the CHX, in the absence of the marketing fee the CHX specialist trading a Subject Issue is the sole bearer of the often substantial costs associated with attracting order flow to the CHX, as well as the licensing fees that the licensor of the product imposes.[7] CHX market makers participating in transactions in Subject Issues, conversely, do not currently share any of these costs. The proposed rule change would allow a specialist trading a Subject Issue to elect or decline imposition of the marketing fee depending on whether the specialist believes it is appropriate for a part of the financial burden of trading the Subject Issue to be allocated among those trading the Subject Issue. The CHX anticipates that the proposed rule change will continue to provide specialists trading Subject Issues with sufficient incentive to continue their efforts to attract additional order flow and increase market share.

2. Statutory Basis

The CHX believes that the proposed rule change is consistent with section 6(b)(4) of the Act [8] in that it provides for the equitable allocation of reasonable dues, fees and other charges among its members.

B. Self-Regulatory Organization's Statement of Burden on Competition

The CHX believes that the proposed rule change will not impose any burden on competition that is not necessary or appropriate in furtherance of the purposes of the Act.

C. Self-Regulatory Organization's Statement on Comments Regarding the Proposed Rule Change Received From Members, Participants or Others

The CHX received one written comment from a member in advance of the CHX Finance Committee meeting on July 23, 2002. This letter from John P. Finnegan of Susquehanna Investment Group, a CHX market maker in the Nasdaq 100 Index (or QQQ), noted that since imposition of the Marketing Fee the number of CHX market makers trading in exchange-traded funds (''ETFs'') has dropped from fifteen market makers to three market makers. Mr. Finnegan requested that the CHX reduce the amount of the marketing fee significantly, to enable the CHX to ''be competitive with other marketplaces.''

The CHX believes that this analysis mistakenly attributes the decline in CHX market maker activity to the imposition of the marketing fee. The CHX believes that the decline is attributable to other factors, including significant competition for ETF order flow from other national market participants and alternative trading systems. According to the CHX, one alternative trading system has recently captured nearly a one-third market share in the QQQ product, a market share higher than that sustained by the QQQ listing market. Moreover, although the CHX acknowledges that imposition of the marketing fee does increase a market maker's cost of trading Subject Issues on the CHX, the CHX believes that the often significant costs associated with the Subject Issues, including increasingly hefty license fees, amply justify asking the CHX members who trade the Subject Issues to share the costs of attracting the order flow and trading these popular products on the CHX.

III. Date of Effectiveness of the Proposed Rule Change and Timing for Commission Action

The foregoing rule change establishes or changes a due, fee, or other CHX charge and therefore has become effective pursuant to section 19(B)(3)(A) of the Act [9] and Rule 19b–4(f)(2) thereunder.[10] At any time within 60 days of the filing of the rule change, the Commission may summarily abrogate the rule change if it appears to the Commission that such action is necessary or appropriate in the public interest, for the protection of investors, or otherwise in furtherance of the purposes of the Act.

IV. Solicitation of Comments

Interested persons are invited to submit written data, views and arguments concerning the foregoing, including whether the proposed rule change is consistent with the Act. Persons making written submissions should file six copies thereof with the Secretary, Securities and Exchange Commission, 450 Fifth Street, NW., Washington, DC 20549. Copies of the submission, all subsequent amendments, all written statements with respect to the proposed rule change that are filed with the Commission, and all written communications relating to the proposed rule change between the Commission and any person, other than those that may be withheld from the

[3] ''Subject Transaction'' means: (a) Any trade with a customer, whether the contra party is a specialist or a market maker, where the order is delivered to the CHX via the MAX system or where compensation is paid to induce the routing of the order to the CHX; or (b) any trade between a specialist and a market maker in which the market maker is exercising rights under the market maker entitlement rules.

[4] ''Subject Issue'' means any issue which constitutes an exchange-traded fund and meets the following two criteria: (a) Average daily share volume in the issue exceeds 150,000 shares each month during a consecutive two month period; and (b) market maker share participation in the same issue exceeds 5% for each month during the same two-month period.

[5] *See* Securities Exchange Act Release Nos. 44646 (August 2, 2001), 66 FR 41641 (August 8, 2001) (announcing immediate effectiveness of the new marketing fee provision to the CHX fee schedule through December 31, 2001); 45282 (January 15, 2002), 67 FR 3517 (January 24, 2002) (extending program through June 30, 2002); and 46233 (July 19, 2002), 67 FR 48960 (July 26, 2002) (extending program through July 31, 2002).

[6] *See* Securities Exchange Act Release No. 44646 (August 2, 2001), 66 FR 41641 (August 8, 2001) (SR–CHX–2001–10) (describing potential arrangements between specialists and market makers). According to the CHX, no such arrangements are currently in place. Conversation between Kathleen M. Boege, Associate General Counsel, CHX, and Patrick M. Joyce, Special Counsel, Division of Market Regulation, Commission, on July 31, 2002.

[7] The marketing fee, under the rule change proposed herein, will be assessed only against exchange-traded fund products, which virtually always have an associated licensing fee. Currently, the marketing fee is assessed only against the Nasdaq-100 Index exchange-traded fund, commonly known as ''QQQ.''

[8] 15 U.S.C. 78f(b)(4).

[9] 15 U.S.C. 78s(b)(3)(A).

[10] 17 CFR 19b–4(f)(2).

public in accordance with the provisions of 5 U.S.C. 552, will be available for inspection and copying at the Commission's Public Reference Room. Copies of the filing will also be available for inspection and copying at the principal office of the CHX. All submissions should refer to File No. SR–CHX–2002–25 and should be submitted by August 29, 2002.

For the Commission, by the Division of Market Regulation, pursuant to delegated authority.[11]

Margaret H. McFarland,

Deputy Secretary.

[FR Doc. 02–20032 Filed 8–7–02; 8:45 am]

BILLING CODE 8010–01–P

[11] 17 CFR 200.30–3(a)(12).

SECURITIES AND EXCHANGE COMMISSION

Release No. 34–46298; File No. SR–NYSE–2002–27

Self-Regulatory Organizations; Notice of Filing and Order Granting Accelerated Approval of a Proposed Rule Change by the New York Stock Exchange, Inc. Relating to the iShares MSCI Japan Index Fund

August 1, 2002.

Pursuant to section 19(b)(1) of the Securities Exchange Act of 1934, the ''1934 Act''[1] and Rule 19b–4 thereunder,[2] notice is hereby given that on July 24, 2002, the New York Stock Exchange, Inc. (''NYSE'' or ''Exchange'') filed with the Securities and Exchange Commission (''SEC'' or ''Commission'') the proposed rule change as described in items I, II, and III below, which items have been prepared by the Exchange. The Commission is publishing this notice to solicit comments on the proposed rule change from interested persons and is approving the proposal on an accelerated basis.

Self-Regulatory Organization's Statement of the Terms of Substance of the Proposed Rule Change

The NYSE proposes to trade, on an unlisted trading privileges (''UTP'') basis, the iShares MSCI Japan Index Fund (''Fund''), which is a type of Investment Company Unit (''ICU'') and is considered an Exchange Traded (''ETF'').

[1] 15 U.S.C. 78s(b)(1).

[2] 17 CFR 240.19b–4.

II. Self-Regulatory Organization's Statement of the Purpose of, and Statutory Basis for, the Proposed Rule Change

In its filing with the Commission, the self-regulatory organization included statements concerning the purpose of and basis for the proposed rule change. The text of these statements may be examined at the places specified in item IV below and is set forth in Sections A, B, and C below.

A. Self-Regulatory Organization's Statement of the Purpose of, and Statutory Basis for, the Proposed Rule Change

1. Purpose

The Exchange has adopted listing standards applicable to ICUs, which the Exchange states are consistent with the listing criteria currently used by the American Stock Exchange LLC (''Amex'') and other exchanges, and trading standards pursuant to which the Exchange may trade ICUs on the Exchange on a UTP basis.[3] The Exchange now proposes to trade the Fund on a UTP basis. The Fund has been listed and actively traded on the Amex since 1996[4] and trades on other securities exchanges[5] and in the over-the-counter market. The information below is intended to provide a description of how the Fund was created and is traded.[6]

Barclays Global Fund Advisors (the ''Advisor'' or ''BGFA'') is the investment adviser to the Fund. The Advisor is registered under the Investment Advisers Act of 1940. The Adviser is a wholly owned subsidiary of Barclays Global Investors, N.A. (''BGI''). BGI is a wholly owned indirect subsidiary of Barclays Bank PLC of the United Kingdom.[7]

SEI Investments Distribution Co. (the ''Distributor''), a Pennsylvania corporation and broker-dealer registered under the Exchange Act, is the principal underwriter and distributor of Creation Unit Aggregations (as defined below) of iShares. The distributor is not affiliated with the Exchange or the Advisor.[8]

The shares of the Fund are issued by iShares, Inc., and are based on the Morgan Stanley Capital International (''MSCI'') Japan Index. iShares, Inc. is an open-ended management investment company operating 22 separate investment portfolios or ''index funds.'' The MSCI Japan Index (the ''Index'') is intended to represent the Japanese market. The Index consists of stocks traded primarily on the Tokyo Stock Exchange. As of July 16, 2002, the three largest stocks in the Index were Toyota Motor Corp., Sony Corp., and NTT DoCoMo Inc. The investment objective of the Fund is to seek investment results similar to the performance of the stock markets in Japan, as represented by the Index. The Fund uses a ''passive,'' or indexing, approach to attempt to produce investment results that approximate the investment performance of the Index. The Fund will normally invest at least 95% of its total assets in stock that are represented in the Index, and will, at all times, invest at least 90% of its total assets in such stocks. The Fund will not hold all of the stocks that comprise the Index, but will attempt to hold a representative sampling of the securities in the Index in a technique known as ''portfolio sampling.'' iShares, Inc. will issue and redeem the shares of the Fund only in aggregations of 600,000 shares (each aggregation a ''Creation Unit''), which had an estimated value of approximately $5 million as of January 1, 2002. On July 16, 2002, the NAV of the Fund was $8.36, and the Fund traded at a price of $8.25 per share. As of the same day, the Fund had total net assets of approximately $732,548,000 and 87,600,000 shares outstanding.

MSCI generally seeks to have 85% of the free float-adjusted market capitalization of a country's stock

[3] In 1996, the Commission approved Section 703.16 of the NYSE's *Listed Company Manual* (''*Manual*''), which sets forth the rules related to the listing of ICUs. *See* Securities Exchange Act Release No. 36923 (March 5, 1996), 61 FR 10410 (March 13, 1996). In 2000, the Commission also approved the Exchange's generic listing standards for the listing and trading, or the trading pursuant to UTP, of ICUs under Section 703.16 of the *Manual* and Exchange Rule 1100. *See* Securities Exchange Act Release No. 43679 (December 5, 2000), 65 FR 77949 (December 13, 2000).

[4] The Fund and other MSCI funds similar in nature were formerly known as World Equity Benchmark Securities (''WEBS'') and were approved for listing and trading on the Amex in 1996. *See* Securities Exchange Act Release No. 36947 (March 8, 1996), 61 FR 10606 (March 14, 1996) (''Amex WEBS Approval Order'').

[5] *See, e.g.,* Securities Exchange Act Release No. 39117 (September 22, 1997), 62 FR 50973 (September 29, 1997) (approving the trading of WEBS on a UTP basis on the Chicago Stock Exchange, Inc.).

[6] Much of the information in this filing was taken from the Prospectus of iShares, Inc., dated as of January 1, 2002, as supplemented, and from the Web sites of the Amex (*www.Amex.com*) and iShares (*www.iShares.com.*) Fund information relating to Net Asset Value (''NAV''), returns, dividends component stock holdings and the like is updated on a daily basis of the Web sites.

[7] Telephone conversation between Janet M. Kissane, Office of General Counsel, NYSE, and Florence E. Harmon, Senior Special Counsel, Division of Market Regulation (''Division''), Commission on August 1, 2002.

[8] Telephone conversation between Janet M. Kissane, Office of General Counsel, NYSE, and Florence E. Harmonn, Senior Special Counsel, Division, Commission, on August 1, 2002.

market reflected in the MSCI Index for such country. Thus, MSCI seeks to balance the inclusiveness of an ''all share'' index against the replicability of a ''blue chip'' index. The Index, as with all of the MSCI indices, is market capitalization weighted. The Index is calculated daily. The calculation method weights stocks in the index by their beginning-of-period market capitalization. Shares prices area ''swept clean'' daily and adjusted for any rights issues, stock dividends, or splits. The Index is calculated in local currency and in U.S. dollars, without dividends and with gross dividends reinvested. Prices used to calculate the Index are the official exchange closing prices. All prices are taken from the dominant exchange in the Japanese market. To calculate the applicable foreign currency exchange rate, MSCI uses WM/Reuters Closing Spot Rates. Under exceptional circumstances, MSCI may elect to use an alternative exchange rate for any country if the WM/Reuters rate is believed not to be representative for the given currency on a particular day.

The Index is calculated by MSCI for each trading day in the Japanese foreign exchange market based on official closing prices in such exchange market. For each trading day, MSCI publicly disseminates the Index value for the previous day's close. The Index is reported periodically in major financial publications and also is available through vendors of financial information. iShares, Inc. will cause to be made available daily the names and required number of shares of each of the securities to be deposited in connection with the issuance of the Fund shares in Creation Unit size aggregations for the fund, as well as information relating to the required cash payment representing, in part, the amount of accrued dividends for the Fund. This information will be made available to the Fund Advisor to any National Securities Clearing Corporation (''NSCC'') participant requesting such information. In addition, other investors can request such information directly from the Fund distributor. The NAV for the fund will be calcualted directly by the Fund administrator, PFPC, Inc. The NAV will also be made available to the public from the Fund distributor by means of a toll-free number and to NSCC participants through data made available from the NSCC.

To provide current Fund pricing information, Amex disseminates through the facilities of the Consolidated Tape Association as ''indicative optimized portfolio value'' (the ''Value'') for the Fund, as calculated by Bloomberg, L.P. The Value will be disseminated every fifteen seconds during regular Amex trading hours of 9:30 a.m. to 4 p.m. Eastern Standard Time. The Value likely will not reflect the value of all securities included in the Index. In addition, the Value will not necessarily reflect the precise composition of the current portfolio of securities held by the Fund at a particular moment. The Value disseminated during Amex trading hours should not be viewed as a real-time update of the NAV of the Fund, which is calculated only once a day. It is expected, however, that during the trading day the Value will closely approximate the value per share of the portfolio of securities for the Fund except under unusual circumstances.

The Exchange will distribute an information circular to its members in connection with the trading of the Fund. The circular will discuss the special characteristics and risks of trading this type of security. Specifically, the circular, among other things, will discuss what the Fund is, how it is created and redeemed, the requirement that members and member firms deliver a prospectus to investors purchasing shares of the Fund prior to or concurrently with the confirmation of a transaction,[9] applicable Exchange rules, dissemination information, trading information and the applicability of suitability rules. The Exchange also intends to utilize its existing surveillance procedures to monitor trading in the Fund, including surveilling specialist compliance with Exchange Rule 460.10, which contemplates specialists engaging in transactions with iShares, Inc. under certain circumstances.[10]

2. Statutory Basis

The Exchange believes that the proposed rule change is consistent with section 6(b) of the Act [11] in general, and furthers the objectives of section 6(b)(5) of the Act [12] in particular, in that it is designed to prevent fraudulent and manipulative acts and practices, to promote just and equitable principles of trade, to remove impediments to, and perfect the mechanism of a free and open market and, in general, to protect investors and the public interest.

B. Self-Regulatory Organization's Statement on Burden on Competition

The Exchange does not believe that the proposed rule change will impose any burden on competition that is not necessary or appropriate in furtherance of the purposes of the Act.

C. Self-Regulatory Organization's Statement on Comments on the Proposed Rule Change Received From Members, Participants or Others

The Exchange has neither solicited nor received written comments on the proposed rule change.

III. Commission's Findings and Order Granting Accelerated Approval of Proposed Rule Change

The Commission finds that the proposed rule change is consistent with the requirements of the Act and the rules and regulations thereunder applicable to a national securities exchange, and, in particular, with the requirements of Section 6(b)(5).[13] The Commission believes that the Exchange's proposal to trade the Fund pursuant to UTP will provide investors with a convenient way of participating in foreign securities markets and can produce added benefits to investors through the increased competition between other markets trading the produce. Specifically, the Commission believes that NYSE's proposal should help provide investors with increased flexibility in satisfying their investment needs, by allowing them to purchase and sell at negotiated prices throughout the trading day securities that replicate the performance of several portfolios of

[9] The Commission has granted the Fund an exemption from section 24(d) of the Investment Company Act of 1940. *See* Investment Company Act Release No. 25623 (June 25, 2002). Thus, the Exchange, in an Informational Circular to Exchange members and member organizations, will inform members and member organizations, prior to commencement of trading, of the prospectus or Product Description delivery requirements applicable to iShares. Any product description used in reliance on the Section 24(d) exemptive order will comply with all representations made and all conditions contained in the Application for the Order. Telephone conversation between Janet M. Kissane, Office of General Counsel, NYSE, and Florence E. Harmon, Senior Special Counsel, Division, Commission, on August 1, 2002.

[10] The Exchange represents that Exchange Rule 460.10 generally precludes certain business relationships between an issuer and the specialist in the issuer's securities. The Exchange further represents that exceptions in the Rule permit specialists in ETF shares, to enter into Creation Unit transactions through the Distributor to facilitate the maintenance of a fair and orderly market. A specialist Creation Unit transaction may only be effected on the same terms and conditions as any other investor, and only at the NAV of the ETF shares. A specialist may acquire a position in excess of 10% of the outstanding issue of the ETF shares, provided, however, that a specialist registered in a security issued by an investment company may purchase and redeem the investment company unit or securities that can be subdivided or converted into such unit, from the investment company as appropriate to facilitate the maintenance of a fair and orderly market in the subject security.

[11] 14 U.S.C. 78f(b).

[12] 15 U.S.C. 78f(b)(5).

[13] 15 U.S.C. 78f(b)(5).

stock,[14] and by increasing the availability of the Fund as an investment tool. Accordingly, as discussed below, the rule proposal is consistent with the requirements of Section 6(b)(5) that Exchange rules facilitate transactions in securities, remove impediments to, and perfect the mechanism of a free and open market and a national market system, and, in general, protect investors and the public interest, and is not designed to permit unfair discrimination between customers, issuers, brokers, or dealers.[15]

As the Commission noted in greater detail in the order approving iShares (formally ''World Equity Benchmark Securities'' or ''WEBS'') for listing and trading on Amex,[16] the estimated cost of an individual iShares, such as the Fund, should make it attractive to individual retail investors who wish to hold a security replicating the performance of a portfolio of foreign stocks. The Commission also notes that the Fund should provide investors with several advantages over standard open-end investment companies; in particular, investors can trade the Fund continuously throughout the day in secondary markets at negotiated prices.[17] In contrast, Investment Company Act of 1940 (''Investment Company Act'') Rule 22c–1 [18] limits holders and prospectus holders of open-end management investment company shares to purchasing or redeeming securities of the fund based on the net asset value of the securities held by the fund as designated by the board of directors. Thus, the Fund should allow investors to respond quickly to market changes through intra-day trading opportunities, expand the opportunity for retail investors to engage in hedging strategies, and reduce transaction costs for trading a portfolio of stocks. The Commission notes that, under the proposed rule change, the benefits of the Fund will now be available to investors trading on NYSE, and believes that the addition of their trading on NYSE pursuant to UTP could produce added benefits to investors through the increased competition.

The Commission notes that, although the value of the Fund is based on the value of the securities and cash held in the Fund, Fund shares are not leveraged instruments. Fund shares are essentially equity securities that represent an interest in a portfolio of stocks designed to reflect substantially the applicable MSCI Index. Accordingly, it is appropriate to regulate the Fund in a manner similar to other equity securities. Nonetheless, the Commission believes that the unique nature of the Fund raises certain disclosure, trading, and other issues that need to be addressed. The remainder of this section addresses these issues, although they are discussed in greater detail in the Amex WEBS Approval Order, where the Commission initially approved WEBS for trading as a new product.

A. Trading of the Fund on NYSE Pursuant to UTP

The Commission notes that, pursuant to Rule 12f–5 under the Act,[19] prior to trading a particular class or type of security pursuant to UTP, NYSE must have listing standards comparable to those of the primary market on which the security is listed. The Commission finds that adequate rules and procedures exist to govern the trading of the Fund on NYSE, pursuant to UTP. Fund shares will be deemed equity securities subject to NYSE's rules governing the trading of equity securities. Accordingly, the Exchange's existing general rules that currently apply to the trading of equity securities will also apply to the Fund. In addition, Section 703.16 of the NYSE's *Manual* and Exchange Rule 1100 [20] which contain specific listing and delisting criteria to accommodate the trading of Units, will apply to the trading of the Fund.[21] These criteria should help to ensure that a minimum level of liquidity will exist in each iShares series to allow for the maintenance of fair and orderly markets. The delisting criteria allow the Exchange to consider the suspension of trading and the delisting of a series of Units, including suspending trading in the Fund traded on the Exchange pursuant to UTP, if an event were to occur that made further dealings in such securities inadvisable. This will give the Exchange flexibility to suspend training in the Fund if circumstances warrant such action. Accordingly, the Commission believes that NYSE's equity rules in general, and Section 703.16 of the Manual and Exchange Rule 1100 in particular, provide adequate safeguards to prevent manipulative acts and practices and to protect investors and the public interest.[22]

B. Disclosure

The Commission believes that NYSE's proposal should provide for adequate disclosure to investors relating to the terms, characteristics, and risks of trading the Fund. All investors in the Fund, including those purchasing the Fund on NYSE pursuant to UTP, will receive a prospectus or a Product Description [23] regarding the product. The prospectus or Product Description will address the special characteristics of the Fund, including a statement regarding their redeemability and method of creation, and that Fund shares are not individually redeemable.

The Commission notes that the Exchange has represented that it will also distribute an information circular to all NYSE members prior to the commencement of trading of the Fund explaining the unique characteristics and risks of the Fund. The circular will note, for example, Exchange member responsibilities, including that, before an Exchange member undertakes to recommend a transaction in the Fund, it should make a determination that it is in compliance with applicable rules of other self-regulatory organizations of which it is a member, including

[14] The Commission notes that unlike typical open-end investment companies, where investors have the right to redeem their fund shares on a daily basis, investors in the Fund can redeem them in creation unit size aggregations only.

[15] In approving this rule, the Commission notes that it has considered the proposed rule's impact on efficiency, competition, and capital formation. 15 U.S.C. 78c(f).

[16] *See* Amex WEBS Approval Order, *supra* note 4. The Commission hereby incorporates by reference the discussion and rational for approving WEBS provided in the Amex WEBS Approval Order.

[17] The Commission believes that the Fund will not trade at a material discount or premium in relation to their NAV, because of potential arbitrage opportunities. *See* Amex WEBS Approval Order, *supra* note 4. The mere potential for arbitrage should keep the market price of Fund shares comparable to their NAVs; therefore, arbitrage activity likely will not be significant. In addition, the Fund will redeem in-kind, thereby enabling the Fund to invest virtually all of its assets in securities comprising the MSCI Index.

[18] 17 CFR 270.22c–1. Investment Company Act Rule 22c–1 generally provides that a registered investment company issuing a redeemable security, its principal underwriter, and dealers in that security may sell, redeem, or repurchase the security only at a price based on the NAV next computed after receipt of an investor's request to purchase, redeem, or resell. The NAV of an open-end management investment company generally is computed once daily Monday to Friday as designated by the investment company's board of directors. The Commission granted WEBS an exemption from this provision to allow them to trade in the secondary market at negotiated prices. *See* Amex WEBS Approval Order, *supra* note 4.

[19] 17 CFR 240.12f–5.

[20] The Commission approval generic rules for the listing and trading of ICUs on NYSE in 2000. *See* Securities Exchange Act Release No. 43679 (December 5, 2000), 65 FR 77949 (December 13, 2000).

[21] The Commission notes the listing and delisting criteria is similar to those adopted by Amex to trade WEBS/iShares.

[22] The Commission also believes that the proposed rule change should help protect investors and the public interest, and help perfect the mechanisms of a national market system, in that it will allow for the trading of the Fund on NYSE pursuant to UTP, making the Fund more broadly available to the investing public.

[23] *See* Investment Company Release No. 25623 (June 25, 2002).

suitability rules.[24] The circular will also address members' responsibility to deliver a prospectus or product description to all investors purchasing the Fund, as well as highlight the characteristics of the Fund, including that Fund shares are only redeemable in Creation Unit size aggregation.[25]

C. Dissemination of the Fund Portfolio Information

The Commission believes that since Amex is disseminating the Values for the various WEBS/iShares series, investors will be provided with timely and useful information concerning the value of iShares, on a per iShares basis. The Commission notes that the information is disseminated through facilities of the CTA and reflects the currently available information concerning the value of the assets comprising the deposit securities. The information is disseminated every fifteen seconds during the hours of 9:30 a.m. to 4 p.m. Eastern Standard Time and will be available to all investors, irrespective of where the transaction is executed. In addition, because the value is expected to closely track the applicable iShares series, the Commission believes the Values will provide investors with adequate information to determine the intra-day value of a given iShares series, such as the Fund.[26] In the Amex WEBS Approval Order, the Commission noted that it expected Amex to monitor the disseminated Value, and if Amex determines that the Value does not closely track applicable WEBS/iShares series, it will arrange to disseminate an adequate alternative.

D. Surveillance

The Commission notes that NYSE has submitted surveillance procedures for the Fund and believes that those procedures are adequate to address concerns associated with the listing and trading of such securities, including any concerns associated with specialists purchasing and redeeming Creation Units. The Exchange has represented that its surveillance procedures should allow it to identify situations where specialists purchase or redeem Creation Units to ensure compliance with NYSE Rule 460.10, which requires that such purchases or redemptions facilitate the maintenance of a fair and orderly market in the subject security.[27]

E. Specialists

The Commission finds that it is consistent with the Act to allow a specialist registered in a security issued by an Investment Company to purchase or redeem the listed security from the issuer as appropriate to facilitate the maintenance of a fair and orderly market in that security. The Commission believes that such market activities should enhance liquidity in such security and facilitate a specialist's market making responsibilities. In addition, because the specialist only will be able to purchase and redeem Fund shares on the same terms and conditions as any other investor (and only at the NAV), and Creation transactions must occur through the distributor and not directly with the issuer, the Commission believes that concerns regarding potential abuse are minimized. As noted above, the Exchange's surveillance procedures also should ensure that such purchases are only for the purpose of maintaining fair and orderly markets, and not for any other improper or speculative purposes. Finally, the Commission notes that its approval of this aspect of the Exchange's rule proposal does not address any other requirements or obligations under the federal securities laws that may be applicable.[28]

F. Accelerated Approval

After careful review, the Commission finds good cause for approving the proposed rule change prior to the thirtieth day after the date of publication of notice thereof in the **Federal Register** pursuant to section 19(b)(2) of the Act.[29] The Commission finds that this proposal is similar to several approved instruments currently listed and traded on the Exchange. Accordingly, the Commission finds that the listing and trading of the Fund on a UTP basis is consistent with the Act, and promote just and equitable principles of trade, foster cooperation and coordination with persons engaged in regulating, clearing, settling, processing information with respect to, and facilitating transactions in securities, and, in general, protect investors and the public interest.[30] The Commission further finds that accelerated approval will enable the Exchange to begin listing and trading the Fund on the Exchange on a UTP basis immediately. The Commission therefore approves this proposal on an accelerated basis.

IV. Solicitation of Comments

Interested persons are invited to submit written data, views and arguments concerning the foregoing, including whether the proposed rule change is consistent with the Act. Persons making written submissions should file six copies thereof with the Secretary, Securities and Exchange Commission, 450 Fifth Street NW., Washington, DC 20549. Copies of the submission, all subsequent amendments, all written statements with respect to the proposed rule change that are filed with the Commission, and all written communications relating to the proposed rule change between the Commission and any person, other than those that may be withheld from the public in accordance with the provisions of 5 U.S.C. 552, will be available for inspection and copying in the Commission's Public Reference Room.

Copies of such filing will also be available for inspection and copying at the principal office of the NYSE. All submissions should refer to the file number SR–NYSE–2002–27 and should be submitted by August 29, 2002.

For the Commission, by the Division of Market Regulation, pursuant to delegated authority.[31]

Margaret H. McFarland,

Deputy Secretary.

[FR Doc. 02–20066 Filed 8–7–02; 8:45 am]

BILLING CODE 8010–01–M

[24] Telephone conversation between Janet M. Kissane, Office of General Counsel, NYSE, and Sapna C. Patel, Attorney, Division, Commission, on July 29, 2002.

[25] The Commission notes that the information circular should also discuss exemptive relief granted by the Commission from certain rules under the Act. The applicable rules are: Rule 10a–1; Rule 10b–10; Rule 14e–5; Rule 10b–17; Rule 11d1–2; Rules 15c1–5 and 15c1–6; and Rules 101 and 102 of Regulation M under the Exchange Act.

[26] In addition, the Amex WEBS Approval Order states that the statement of additional information (''SAI'') to the preliminary prospectus states that each series will calculate its NAV per share at the close of the regular trading session for the Amex on each day that the Amex is open for business. NAV generally will be based on the last quoted sales price on the exchange where the security primarily is traded. *See* Amex WEBS Approval Order, *supra* note 4.

[27] The Commission notes that, in the Amex WEBS Approval Order, it discussed the concerns raised when a broker-dealer is involved in the development, maintenance, and calculation of a stock index upon which a product such as WEBS is based. Adequate procedures to prevent the misuse of material, non-public information regarding changes to component stocks in an MSCI Index have been adopted and should help to address concerns raised by Morgan Stanley's involvement in the management of the Indices. *See also* the ''firewall'' requirements under Section 703.16 of the NYSE's *Manual.*

[28] The Commission notes that with respect to iShares, broker-dealers and other persons are cautioned in the prospectus and/or the Fund's SAI that some activities on their part may, depending on the circumstances, result in their being deemed statutory underwriters and subject them to the prospectus delivery and liability provision of the Securities Act of 1933.

[29] 15 U.S.C. 78s(b)(2).

[30] 15 U.S.C. 78f(b)(5).

[31] 17 CFR 200.30–3(a)(12).

SMALL BUSINESS ADMINISTRATION

[Declaration of Disaster #3424, Amdt. 1]

State of Colorado

In accordance with information received from the Federal Emergency Management Agency dated July 29, 2002, the above numbered declaration is hereby amended to include Larimer, Jackson and Weld Counties in the State of Colorado as disaster areas due to damages caused by wildfires occurring on April 23, 2002 and continuing.

In addition, applications for economic injury loans from small businesses located in the following contiguous counties may be filed until the specified date at the previously designated location: Albany and Laramie Counties in Wyoming; and Kimball County in Nebraska. All other counties contiguous to the above named primary counties have been previously declared.

All other information remains the same, *i.e.*, the deadline for filing applications for physical damage is August 18, 2002, and for economic injury the deadline is March 19, 2003.

(Catalog of Federal Domestic Assistance Program Nos. 59002 and 59008)

Dated: August 2, 2002.

Herbert L. Mitchell,

Associate Administrator for Disaster Assistance.

[FR Doc. 02–20095 Filed 8–7–02; 8:45 am]

BILLING CODE 8025–01–P

SMALL BUSINESS ADMINISTRATION

[Declaration of Disaster #3436]

Federated States of Micronesia

As a result of the President's major disaster declaration for Public Assistance on July 11, 2002, and Amendment 1 adding Individual Assistance on July 26, 2002, I find that the Federated States of Micronesia constitute a disaster area due to damages caused by Tropical Storm Chata'an, including flooding, mudslides and landslides occurring on July 2–4, 2002. Applications for loans for physical damage as a result of this disaster may be filed until the close of business on September 24, 2002 and for economic injury until the close of business on April 28, 2003 at the address listed below or other locally announced locations: Small Business Administration, Disaster Area 4 Office, PO Box 13795, Sacramento, CA 95853–4795.

The interest rates are:

	Percent
For Physical Damage:	
Homeowners with Credit Available Elsewhere	6.750
Homeowners without Credit Available Elsewhere	3.375
Businesses with Credit Available Elsewhere	7.000
Businesses and Non-Profit Organizations without Credit Available Elsewhere	3.500
Others (Including Non-Profit Organizations) with Credit Available Elsewhere	6.375
For Economic Injury:	
Businesses and Small Agricultural Cooperatives without Credit Available Elsewhere	3.500

The number assigned to this disaster for physical damage is 343611 and for economic injury the number is 9Q8700.

(Catalog of Federal Domestic Assistance Program Nos. 59002 and 59008).

Dated: August 1, 2002.

Herbert L. Mitchell,

Associate Administrator for Disaster Assistance.

[FR Doc. 02–20094 Filed 8–7–02; 8:45 am]

BILLING CODE 8025–01–P

SMALL BUSINESS ADMINISTRATION

[Declaration of Disaster #3428, Amdt. 7]

State of Texas

In accordance with a notice received from the Federal Emergency Management Agency dated July 29, 2002, the above numbered declaration is hereby amended to include Calhoun County in the State of Texas as a disaster area due to damages caused by severe storms and flooding occurring on June 29, 2002 and continuing.

All other counties contiguous to the above named primary counties have been previously declared.

All other information remains the same, *i.e.*, the deadline for filing applications for physical damage is September 2, 2002, and for economic injury the deadline is April 4, 2003.

(Catalog of Federal Domestic Assistance Program Nos. 59002 and 59008)

Dated: August 2, 2002.

Herbert L. Mitchell,

Associate Administrator for Disaster Assistance.

[FR Doc. 02–20093 Filed 8–7–02; 8:45 am]

BILLING CODE 8025–01–P

DEPARTMENT OF STATE

[Public Notice 4043]

Overseas Buildings Operations; Industry Advisory Panel: Meeting Notice

The Industry Advisory Panel of Overseas Buildings Operations will meet on Thursday, September 12, 2002 from 9:45 until 11:45 a.m. and 1 p.m. until 3:30 p.m. Eastern Standard Time. The meeting will be held in conference room 1105 at the Department of State, 2201 C Street NW. (entrance on 23rd Street), Washington, DC. The purpose of the meeting is to discuss new technologies and successful management practices for design, construction, security, property management, emergency operations, the environment, and planning and development. An agenda will be available prior to the meeting.

The meeting will be open to the public, however, seating is limited. Prior notification and a valid photo ID are mandatory for entry into the building. Members of the public who plan to attend must notify Luigina (Gina) Pinzino at 703/875–7109 before Wednesday, September 4th, to provide date of birth, Social Security number, and telephone number.

FOR FURTHER INFORMATION CONTACT: Luigina (Gina) Pinzino 703/875–7109.

Dated: July 30, 2002.

Charles E. Williams,

Director/Chief Operating Officer, Overseas Buildings Operations, Department of State.

[FR Doc. 02–20089 Filed 8–7–02; 8:45 am]

BILLING CODE 4710–24–P

OFFICE OF THE UNITED STATES TRADE REPRESENTATIVE

2002–2003 Allocations of the Tariff-rate Quotas for Raw Cane Sugar, Refined Sugar, and Sugar-Containing Products

AGENCY: Office of the United States Trade Representative.

ACTION: Notice.

SUMMARY: The Office of the United States Trade Representative (USTR) is providing notice of the country-by-country allocations of the in-quota quantity of the tariff-rate quotas for imported raw cane sugar, refined sugar, and sugar-containing products for the period that begins October 1, 2002 and ends September 30, 2003. The allocation for Mexico provided for under the North American Free Trade Agreement will be made at a later date.

EFFECTIVE DATE: October 1, 2002.

ADDRESSES: Inquiries may be mailed or delivered to Sharon Sydow, Director of Agricultural Trade Policy, Office of Agricultural Affairs, Office of the United States Trade Representative, 600 17th Street, NW., Washington, DC 20508.

FOR FURTHER INFORMATION CONTACT: Sharon Sydow, Office of Agricultural Affairs, 202–395–6127.

SUPPLEMENTARY INFORMATION: Pursuant to Additional U.S. Note 5 to chapter 17 of the Harmonized Tariff Schedule of the United States (HTS), the United States maintains tariff-rate quotas for imports of raw cane and refined sugar. Pursuant to additional U.S. Note 8 to chapter 17 of the HTS, the United States also maintains a tariff-rate quota for certain sugar-containing products.

Section 404(d)(3) of the Uruguay Round Agreements Act (19 U.S.C. 3601(d)(3)) authorizes the President to allocate the in-quota quantity of a tariff-rate quota for any agricultural product among supplying countries or customs areas. The President delegated this authority to the United States Trade Representative under paragraph (3) of Presidential Proclamation No. 6763 (60 FR 1007).

The in-quota quantity of the tariff-rate quota for raw cane sugar for the period October 1, 2002–September 30, 2003, has been established by the Secretary of Agriculture at 1,117,195 metric tons, raw value (1,231,497 short tons), the minimum to which the United States is committed under the Uruguay Round Agreement. The quantity of 1,117,195 metric tons, raw value is being allocated to the following countries:

Country	FY 2003 Allocation
Argentina	45,281
Australia	87,402
Barbados	7,371
Belize	11,583
Bolivia	8,424
Brazil	152,691
Colombia	25,273
Congo	7,258
Cote d' Ivoire	7,258
Costa Rica	15,796
Dominican Republic	185,335
Ecuador	11,583
El Salvador	27,379
Fiji	9,477
Gabon	7,258
Guatemala	50,546
Guyana	12,636
Haiti	7,258
Honduras	10,530
India	8,424
Jamaica	11,583
Madagascar	7,258
Malawi	10,530
Mauritius	12,636
Mexico	7,258
Mozambique	13,690
Nicaragua	22,114
Panama	30,538
Papua New Guinea	7,258
Paraguay	7,258
Peru	43,175
Philippines	142,160
South Africa	24,220
St. Kitts & Nevis	7,258
Swaziland	16,849
Taiwan	12,636
Thailand	14,743
Trinidad-Tobago	7,371
Uruguay	7,258
Zimbabwe	12,636

These allocations are based on the countries' historical trade to the United States. The allocations of the raw cane sugar tariff-rate quota to countries that are net importers of sugar are conditioned on receipt of the appropriate verifications of origin.

This allocation includes the following minimum quota-holding countries: Congo, Cote d' Ivoire, Gabon, Haiti, Madagascar, Papua New Guinea, Paraguay, St. Kitts & Nevis, and Uruguay.

The in-quota quantity of the tariff-rate quota for refined sugar for the period October 1, 2002–September 30, 2003, has been established by the Secretary of Agriculture at 37,000 metric tons, raw value (40,786 short tons), of which the Secretary has reserved 16,656 metric tons (18,360 short tons) for specialty sugars. Of the quantity not reserved for specialty sugars, a total of 10,300 metric tons (11,354 short tons) is being allocated to Canada and 2,954 metric tons (3,256 short tons) is being allocated to Mexico. The remaining 7,090 metric tons (7,815 short tons) of the in-quota quantity not reserved for specialty sugars may be supplied by any country on a first-come, first-served basis, subject to any other provision of law. The 16,656 metric tons(18,360 short tons) reserved for specialty sugars is also not being allocated among supplying countries and is available on a first-come, first-served basis, subject to any other provision of law.

With respect to the tariff-rate quota for certain sugar-containing products maintained pursuant to additional U.S. Note 8 to chapter 17 of the HTS, 59,250 metric tons (65,312 short tons) of sugar-containing products is being allocated to Canada. The remaining in-quota quantity for this tariff-rate quota is available to other countries on a first-come, first-served basis.

Conversion factor: 1 metric ton = 1.10231125 short tons.

Allen F. Johnson,

Chief Agriculture Negotiator.

[FR Doc. 02–20008 Filed 8–7–02; 8:45 am]

BILLING CODE 3190–01–P

DEPARTMENT OF TRANSPORTATION

[STB Finance Docket No. 34216]

South Dakota Railroad Authority–Acquisition Exemption–Rutland Line, Inc.

South Dakota Railroad Authority (SDRA), a noncarrier, has filed a verified notice of exemption under 49 CFR 1150.31 to acquire approximately 22.40 miles of track from Rutland Line, Inc. in Sargent County, ND. The line to be acquired is located between milepost 65.57 at the South Dakota/North Dakota border and milepost 43.17, including approximately 275 feet of track [1] at Geneseo Junction, ND. SDRA states that an operator for the line has not yet been determined. SDRA certifies that its projected annual revenues will not exceed those that would qualify it as a Class III rail carrier.

SDRA reports that an agreement for the transaction was reached and the transaction was consummated on June 4, 2002. The effective date of the exemption was July 16, 2002 (7 days after the exemption was filed).

If the notice contains false or misleading information, the exemption is void *ab initio.* Petitions to revoke the exemption under 49 U.S.C. 10502(d) may be filed at any time. The filing of a petition to revoke will not automatically stay the transaction.

An original and 10 copies of all pleadings, referring to STB Finance Docket No. 34216, must be filed with the Surface Transportation Board, 1925 K Street NW., Washington, DC 20423–0001. In addition, a copy of each pleading must be served on Bruce E. Lindholm, Program Manager, 700 East Broadway Avenue, Pierre, SD 57501.

Board decisions and notices are available on our website at ''*http://www.stb.dot.gov.*''

Decided: July 30, 2002.

[1] By letter filed July 22, 2002, SDRA requested modification of the notice of the exemption to include an additional 275 feet of track beyond milepost 43.17 (Geneseo Joint Section), so that a future operator of the line may be able to interchange with another carrier. SDRA indicates that an amendment to the purchase agreement will be executed to effect the change.

By the Board, David M. Konschnik, Director, Office of Proceedings.

Vernon A. Williams,

Secretary.

[FR Doc. 02–19793 Filed 8–7–02; 8:45 am]

BILLING CODE 4915–00–P

DEPARTMENT OF TRANSPORTATION

Surface Transportation Board

[STB Finance Docket No. 34228]

S&L Railroad, LLC—Acquisition and Operation Exemption—Progress Rail Services Corporation d/b/a Sidney & Lowe Railroad

S&L Railroad, LLC (S&L), a noncarrier and wholly owned subsidiary of Progress Rail Services Corporation doing business as Sidney & Lowe Railroad (PRSC), has filed a notice of exemption under 49 CFR 1150.31 to acquire from PRSC and operate approximately 11 miles of rail line and connecting track known as the Sidney & Lowe Railroad Line, extending from milepost 0 at Huntsman, NE, where it connects with a rail line of The Burlington Northern and Santa Fe Railway Company, to milepost 10 at Brownson, NE, where it connects with a rail line of Union Pacific Railroad Company.

According to S&L, an agreement has been reached between S&L and PRSC regarding the sale and operation of the rail line. S&L certifies that its projected annual revenues as a result of this transaction do not exceed those that would qualify it as a Class III rail carrier, and that such revenues will not exceed $5 million annually.

The transaction was scheduled to be consummated on or shortly after July 22, 2002, the effective date of the exemption (7 days after the exemption was filed).

If the verified notice contains false or misleading information, the exemption is void *ab initio.* Petitions to revoke the exemption under 49 U.S.C. 10502(d) may be filed at any time. The filing of a petition to revoke will not automatically stay the transaction.

An original and 10 copies of all pleadings, referring to STB Finance Docket No. 34228 must be filed with the Surface Transportation Board, 1925 K Street, NW., Washington, DC 20423–0001. In addition, a copy of each pleading must be served on J. Duane Cantrell, Progress Rail Services Corporation, 1600 Progress Drive, Albertville, AL 35950.

Board decisions and notices are available on our website at ''*http://WWW.STB.DOT.GOV.*''

By the Board, David M. Konschnik, Director, Office of Proceedings.

Decided: July 29, 2002.

Vernon A. Williams,

Secretary.

[FR Doc. 02–19528 Filed 8–7–02; 8:45 am]

BILLING CODE 4915–00–P

DEPARTMENT OF THE TREASURY

Internal Revenue Service

Proposed Collection; Comment Request for Form 8874

AGENCY: Internal Revenue Service (IRS), Treasury.

ACTION: Notice and request for comments.

SUMMARY: The Department of the Treasury, as part of its continuing effort to reduce paperwork and respondent burden, invites the general public and other Federal agencies to take this opportunity to comment on proposed and/or continuing information collections, as required by the Paperwork Reduction Act of 1995, Public Law 104–13 (44 U.S.C. 3506(c)(2)(A)). Currently, the IRS is soliciting comments concerning Form 8874, New Markets Credit.

DATES: Written comments should be received on or before October 7, 2002 to be assured of consideration.

ADDRESSES: Direct all written comments to Glenn P. Kirkland, Internal Revenue Service, room 6411, 1111 Constitution Avenue NW., Washington, DC 20224.

FOR FURTHER INFORMATION CONTACT: Requests for additional information or copies of the form and instructions should be directed to Carol Savage, (202) 622–3945, or through the internet (*CAROL.A.SAVAGE@irs.gov.*), Internal Revenue Service, room 6407, 1111 Constitution Avenue NW., Washington, DC 20224.

SUPPLEMENTARY INFORMATION:

Title: New Markets Credit.

OMB Number: To be assigned later.

Form Number: Form 8874.

Abstract: Investors to claim a credit for equity investments made in Qualified Community Development Entities use Form 8874.

Current Actions: This is a new collection of information.

Type of Review: New OMB approval.

Affected Public: Individuals or households, and business or other for-profit organizations.

Estimated Number of Respondents: 10,000.

Estimated Time Per Respondent: 10 hours, 5 minutes.

Estimated Total Annual Burden Hours: 100,900.

The following paragraph applies to all of the collections of information covered by this notice:

An agency may not conduct or sponsor, and a person is not required to respond to, a collection of information unless the collection of information displays a valid OMB control number. Books or records relating to a collection of information must be retained as long as their contents may become material in the administration of any internal revenue law. Generally, tax returns and tax return information are confidential, as required by 26 U.S.C. 6103.

Request for Comments: Comments submitted in response to this notice will be summarized and/or included in the request for OMB approval. All comments will become a matter of public record. Comments are invited on: (a) Whether the collection of information is necessary for the proper performance of the functions of the agency, including whether the information shall have practical utility; (b) the accuracy of the agency's estimate of the burden of the collection of information; (c) ways to enhance the quality, utility, and clarity of the information to be collected; (d) ways to minimize the burden of the collection of information on respondents, including through the use of automated collection techniques or other forms of information technology; and (e) estimates of capital or start-up costs and costs of operation, maintenance, and purchase of services to provide information.

Approved: August 1, 2002.

Carol Savage,

Program Analyst.

[FR Doc. 02–20115 Filed 8–7–02; 8:45 am]

BILLING CODE 4830–01–P

DEPARTMENT OF THE TREASURY

Internal Revenue Service

[REG–253578–96]

Proposed Collection; Comment Request for Regulation Project

AGENCY: Internal Revenue Service (IRS), Treasury.

ACTION: Notice and request for comments.

SUMMARY: The Department of the Treasury, as part of its continuing effort to reduce paperwork and respondent burden, invites the general public and other Federal agencies to take this opportunity to comment on proposed and/or continuing information collections, as required by the Paperwork Reduction Act of 1995,

Public Law 104–13 (44 U.S.C. 3506(c)(2)(A)). Currently, the IRS is soliciting comments concerning an existing notice of proposed rulemaking, REG–253578–96, Health Insurance Portability for Group Health Plans; and temporary regulation (TD 8716) Interim Rules for Health Insurance Portability for Group Health Plans (§§ 54.9801–3T, 54.9801–4T, 54.9801–5T, and 54.9801–6T).

DATES: Written comments should be received on or before October 7, 2002 to be assured of consideration.

ADDRESSES: Direct all written comments to Glenn P. Kirkland, Internal Revenue Service, room 6411, 1111 Constitution Avenue NW., Washington, DC 20224.

FOR FURTHER INFORMATION CONTACT: Requests for additional information or copies of regulations should be directed to Carol Savage, (202) 622–3945, or through the internet *(CAROL.A.SAVAGE@irs.gov.),* Internal Revenue Service, room 6407, 1111 Constitution Avenue NW., Washington, DC 20224.

SUPPLEMENTARY INFORMATION: Title: Notice of Proposed Rulemaking, Health Insurance Portability for Group Health Plans, and temporary regulation, Interim Rules for Health Insurance Portability for Group Health Plans.

OMB Number: 1545–1537.

Regulation Project Number: REG–253578–96.

Abstract: These regulations contain rules governing access, portability, and renewability requirements for group health plans and issuers of health insurance coverage offered in connection with a group health plan. The regulations also provide guidance for group health plans and the employers maintaining them regarding requirements imposed on plans relating to preexisting condition exclusions, discrimination based on health status, and access to coverage.

Current Actions: There is no change to these existing regulations.

Type of Review: Extension of a currently approved collection.

Affected Public: Business or other for-profit organizations, not-for-profit institutions, and state, local, or tribal governments.

Estimated Number of Respondents: 1,300,000.

Estimated Time Per Respondent: Varies.

Estimated Total Annual Burden Hours: 591,561.

The following paragraph applies to all of the collections of information covered by this notice:

An agency may not conduct or sponsor, and a person is not required to respond to, a collection of information unless the collection of information displays a valid OMB control number. Books or records relating to a collection of information must be retained as long as their contents may become material in the administration of any internal revenue law. Generally, tax returns and tax return information are confidential, as required by 26 U.S.C. 6103.

Request for Comments: Comments submitted in response to this notice will be summarized and/or included in the request for OMB approval. All comments will become a matter of public record. Comments are invited on: (a) Whether the collection of information is necessary for the proper performance of the functions of the agency, including whether the information shall have practical utility; (b) the accuracy of the agency's estimate of the burden of the collection of information; (c) ways to enhance the quality, utility, and clarity of the information to be collected; (d) ways to minimize the burden of the collection of information on respondents, including through the use of automated collection techniques or other forms of information technology; and (e) estimates of capital or start-up costs and costs of operation, maintenance, and purchase of services to provide information.

Approved: August 2, 2002.

Carol Savage,

Program Analyst.

[FR Doc. 02–20116 Filed 8–7–02; 8:45 am]

BILLING CODE 4830–01–P

DEPARTMENT OF THE TREASURY

Internal Revenue Service

Electronic Tax Preparation and Filing; Intent to Enter Agreement, Opportunity for Comment, Opportunity to Submit Proposals for Additional Consortia

AGENCY: Internal Revenue Service (IRS), Treasury.

ACTION: Advance notice of intent to enter an agreement, opportunity for comment, opportunity to submit proposals for additional consortia.

SUMMARY: The Internal Revenue Service (IRS) proposes to enter into an agreement (the Agreement) with a consortium of companies in the electronic tax preparation and filing industry (the Consortium) who together desire to work together to offer free, online tax return preparation and filing services to taxpayers (Free Services). The Consortium will offer these Free Services to taxpayers. The IRS will provide taxpayers with links to the Free Services offered by the Consortium participants through a web page that will be hosted at irs.gov with links from firstgov.gov. These links to the Consortium will replace the current heading on IRS.gov for ''Free Internet Filing Opportunities''. Under the Agreement and during its term, the IRS will not compete with the Consortium in providing free, online tax return preparation and filing services to taxpayers. The IRS is soliciting comments on this proposed Agreement and complimentary or competitive offers from alternative consortia to provide Free Services to taxpayers. During this process other Federal agencies will be consulted.

DATES: Comments or proposals must be submitted by September 4, 2002.

ADDRESSES: Send letters with comments and suggestions on the proposed Agreement, or other proposals, to Paul J. Mamo, 1111 Constitution Avenue, Room 2403, Washington DC. 20224 or to the IRS Internet address: *WI.EGOVPO@irs.gov.*

SUPPLEMENTARY INFORMATION: The IRS plans to enter into an Agreement (the Agreement) with the Consortium to accomplish the following five objectives:

1. Seek to assure access to a free and secure electronic preparation and filing option for additional taxpayers, building upon free electronic tax preparation and filing provided in the commercial market today;

2. Making tax return preparation and filing easier and reducing the burden on individual taxpayers;

3. Supporting the IRS's statutory goals of increased e-filing, pursuant to the IRS Restructuring and Reform Act of 1998, which encouraged the IRS to set a goal of having 80% of Federal tax and information returns filed electronically by the year 2007;

4. Providing greater service and access to taxpayers; and

5. Implementing one of the proposals in the President's FY'03 budget, specifically to encourage further growth in electronic filing by providing taxpayers the option to file their tax return on-line without charge using cooperation with, and encouraging competition within, the private sector to increase e-filing.

The anticipated essential terms of the Agreement are established in a document described as a Term Sheet. This draft Term Sheet follows.

Dated: July 31, 2002.

Terence H. Lutes,

Director, IRS Electronic Tax Administration.

July 30, 2002 Draft

Free On-Line Electronic Tax Filing Agreement

Term Sheet

I. Purpose

The purpose of this term sheet is to describe the essential terms of an agreement (''the Agreement''). The Agreement will provide for free, online tax return preparation and filing to individual taxpayers, thereby meeting the following five objectives:

1. Seeking to assure access to a free and secure electronic preparation and filing option for additional taxpayers, building upon free electronic tax preparation and filing provided in the commercial market today;
2. Making tax return preparation and filing easier and reducing the burden on individual taxpayers;
3. Supporting the IRS's statutory goals of increased e-filing, pursuant to the IRS Restructuring and Reform Act of 1998, which encouraged the IRS to set a goal of having 80% of Federal tax and information returns filed electronically by the year 2007;
4. Providing greater service and access to taxpayers; and
5. Implementing one of the proposals in the President's FY'03 budget, specifically to encourage further growth in electronic filing by providing taxpayers the option to file their tax return on-line without charge, using cooperation with, and encouraging competition within, the private sector to increase e-filing.

II. Summary

To accomplish the above objectives, the Internal Revenue Service (the ''IRS'') and a consortium of companies in the electronic tax preparation and filing industry (the ''Consortium'') (together, ''the Parties'') desire to work together to offer free, online tax return preparation and filing services to taxpayers (''Free Services''). The Consortium will offer Free Services to taxpayers at no cost. The IRS will provide taxpayers with links to the Free Services offered by the Consortium participants through a web page (described more fully in VI below; hereafter, the ''Web Page''), which will be hosted at irs.gov accessible through firstgov.gov. During the term of the Agreement, the IRS will not compete with the Consortium in providing free, online tax return preparation and filing services to taxpayers.

The Agreement is the best method (business case) for meeting the above stated objectives because it will promote higher quality Services by utilizing the existing expertise of the private sector, maximize consumer choice, promote competition for such Services, and thereby meet the objectives in the least costly manner.

III. Consortium

The Consortium is intended to be part of an existing, non-profit corporation (under the provisions of 26 U.S.C. § 501(c)(3)) affiliated with The Council for Electronic Revenue Communication Advancement (CERCA). The Consortium is being formed to facilitate participation in the Agreement by commercial entities (''Consortium Participants'') engaged in the business of electronic tax preparation and filing.

IV. Scope of Offerings

A. The Consortium will offer Free Services for eligible taxpayers (taxpayers meeting the qualifications for free offerings) from individual commercial sites. Such offerings, when taken in the aggregate, are intended to provide for Free Services to be available to 60% or more of taxpayers. If at any point the Consortium's aggregate offerings of Free Services are available to fewer than 60 % of taxpayers, the IRS may notify the Consortium of that fact. After receipt of such notice, the Consortium will have six months within which to raise the availability of such offerings to at least 60% of taxpayers. If the Consortium fails to achieve 60% within such six-month period, the IRS may terminate the Agreement. In making this decision, the IRS agrees to take into account the extent to which actual usage of Free Services has increased. Consortium offerings, taken together, will provide eligible taxpayers with a reasonable assurance that: (1) Free Services will be available on demand, and (2) these services will provide the ability to file the same federal tax forms which are fileable and available in the comparable paid online services offered by a selected Consortium member.

B. The Consortium shall accept offerings only from entities that:

1.Provide electronic, on-line tax preparation and filing of individual income tax returns;

1. Will offer and can provide Free Services to a number of individual taxpayers which equals or exceeds 10 percent (10%) of the number of individual income tax returns filed in the base year (CY 2001).
3. Offer online software approved by the IRS that generates returns that can be sent to the IRS via an IRS-approved channel.
4. Are Authorized IRS E-File Providers in accord with IRS Rev. Proc. 2000–31.
5. Are in compliance with applicable law, including but not limited to, Department of Treasury/IRS rules, including but not limited to 31 C.F.R. Part 10, IRS Rev. Proc. 2000–31, current versions of IRS Publications 1345 and 1345–A, and 26 U.S.C. § 7216.
6. Demonstrate the competence and capability to deliver their free offerings. This competence and capability may be demonstrated either by providing evidence of prior experience in providing on-line or electronic filing services or by self-certification. Such self-certification shall be reasonably and objectively determined by the Consortium, taking into account the above referenced need for competence and capability and the intent of the Agreement to avoid unnecessary barriers to entry. Consortium Participants must have adequate capacity to meet the expected demand for their Free Services. In addition to initial Participants, the Consortium will accept later qualified applicants as Consortium Participants.
7. Have security certification, from a third party agreed to by the IRS. It is understood that the Agreement will contain the names of acceptable third-party certifiers.
8. Comply with the privacy provisions of 26 U.S.C. § 7216. Have privacy certification from a third party agreed to by the IRS. Consortium participants are encouraged to use software that will enable their websites to state their privacy practices in a standard machine readable format that can be retrieved automatically and interpreted easily by users. Consortium Participants shall also agree that provisions of Free Services shall not be conditioned on obtaining an eligible taxpayer's consent to solicitations of additional business. It is understood that the Agreement will contain the names of acceptable third-party certifiers.
9. Will not contain or provide links to inappropriate content.
10. Clearly disclose to users their customer service support options and privacy policy.
11. Agree to have at least one link to the IRS.

C. The Consortium will take reasonable steps to publicize the criteria for Consortium participation. The Consortium will provide to the IRS, on request, the names of unsuccessful applicants for Consortium participation and the reason for their rejection.

V. Performance Standards

A. The IRS will have the Consortium web page ready by December 31, 2002. Consortium participants will have submitted their test returns produced by their software to the IRS sufficiently in advance of that date for testing . The IRS will not list on the Consortium web page a Consortium participant whose test returns have not been certified prior to the beginning of the filing season until that participant's test returns has been tested and certified.

B. The Consortium will make its best efforts to assure that Free Services by individual Consortium Participants are performed in accordance with the terms of the Agreement and in accordance with the offer made by the Consortium Participant. If the IRS determines a particular offering of Free Services is deficient or that Free Services are not being properly performed, it will notify the Consortium in writing of that fact, and provide information regarding corrective actions it believes are needed.

C. The undertaking by the Consortium under IV. A to offer Free Services at or above the 60% level shall apply only to January through April of each year (the primary tax filing season). Outside of the primary tax filing season, the Consortium shall encourage Consortium members to offer Free Services to the same extent that such services are offered by Consortium members for compensation.

D. The Consortium will be responsible for establishing its governance standards. These standards shall be in accord with applicable law and regulations. The standards shall be consistent with the Consortium performing its obligations under the Agreement and be designed to maximize participation of industry members while meeting the requirements of the Agreement.

E. IRS, in consultation with the Consortium, will develop an assessment process including usability performance measures to measure the extent to which the Agreement is accomplishing the objectives described in I., above. They will include at least:

1. Uptime and reliability through the tax season.

2. Delivery of the taxpayer to the Free Services in the minimum number of clicks consistent with usability design principles and the need to fully inform taxpayers about the free online services. From the site the taxpayer arrives at by clicking on the Consortium page's link to the Consortium Participant, until the taxpayer arrives at the Free Services, there will be no more clicks than required of such Consortium Participant's paying customers, if applicable, consistent with usability design principles

VI. Consortium Web Page Operation

A. The IRS will host and maintain the Web Page. The Consortium will submit to the IRS proposed content for the Web Page, and the IRS shall determine the final content to appear on the Web Page. The IRS will ensure that there are links from appropriate Government sites to The Web Page.

B. The design of the Web Page will conform to the following guidelines:

1. The Consortium will determine rank order placement of links to individual offerings in accordance with reasonable, objective criteria. Each listing of an offering will provide a description of the scope of, and eligibility for, free Services it offers.

1. The Web Page will provide a link to each Consortium Participant's Free Services entry using a minimum number of clicks.

2. No advertising will appear on the Web Page.

3. The Consortium will create and supply to IRS proposed content for the Web Page using existing IRS content management procedures.

4. The Web Page will be developed using usability design principles and will be updated based upon usability testing and other user feedback.

C. Taxpayers will be able to use Consortium Participants' software to prepare and electronically file their own personal income tax returns using proprietary processes and systems which such Participants host and maintain.

D. The Consortium will promptly notify the IRS of any planned or unplanned unavailability (i.e., downtime) of an offering that is anticipated to exceed five hours in duration. The IRS will annotate that offering's listing on The Web Page with a notice advising the public of the unavailability. The IRS may delist an offeror if its service remains unavailable for more than 24 hours, but shall re-list after restoration of availability; provided, however, if a Consortium Participant repeatedly has periods of such unavailability, the IRS shall be entitled to delist that Consortium Participant.

VII. Marketing

A. The Parties will coordinate with each other their respective marketing of these Free Services to provide uniformity and maximize public awareness. Final decisions on the marketing campaign will remain with the IRS for IRS marketing expenditures and with the Consortium and the Consortium Participants for their marketing expenditures.

B. The IRS will not endorse specific offerings or products, but will promote the availability of the Consortium's Free Services.

C. The Parties will work with the States to explore how the Agreement can support the states. Online tax preparation and e-filing of both federal and state returns can maximize benefits of this Agreement to taxpayers.

D. The Consortium understands that the IRS may continue to provide Consortium Participants or non-Participants Partners links from Government sites to electronic preparers and filers.

VIII. Term of Agreement; Termination

A. The Agreement will have an initial term of three years from its effective date with automatic options to renew for successive two year periods. Representatives from the Parties will meet semiannually to review operation of the Agreement. The Parties will review the terms of the Agreement on an annual basis, and, upon mutual consent, can agree in writing to modify any provision of the Agreement.

B. Either Party may terminate the Agreement for cause if the other Party fails to comply with the Agreement, and such failure is not cured within thirty days of written notice of such failure from the other Party.

C. The IRS may terminate the Agreement without cause, such termination to be effective 12 months after the date of notice of such termination.

D. Should the IRS decide to offer Free Services to taxpayers the IRS shall notify the Consortium immediately. If the IRS gives such notice during the tax season (between January 1st and April 15th), or the last day of the filing deadline if that date is changed from April 15) of any year, the Consortium may, by written notice to the IRS, terminate the Agreement, effective on April 16th of that year. If the IRS gives such notice between April 16th and October 15th of any year, then the Consortium may, by written notice to the IRS other than during a tax season, terminate the Agreement, such termination to be effective no fewer than 30 days after the date of the Consortium's notice of such termination. If the IRS gives such notice between October 15 and December 31, the Consortium may by written notice immediately terminate the Agreement at any time on or before December 31.

IX. Status of Term Sheet

This is not the Agreement, and it is not intended to bind the parties. It is the parties' objective to reach an agreement consistent with these terms in the near future.

For IRS

For IRS For the Consortium

[FR Doc. 02–19835 Filed 8–5–02; 2:58 pm]

BILLING CODE 4830–01–P

Federal Register

Thursday,
August 8, 2002

Part II

Department of Transportation

Research and Special Programs Administration

49 CFR Part 107 et al.

Hazardous Materials: Requirements for Maintenance, Requalification, Repair and Use of DOT Specification Cylinders; Final Rule

DEPARTMENT OF TRANSPORTATION

Research and Special Programs Administration

49 CFR Parts 107, 171, 172, 173, 177, 178, 179, and 180

[Docket No. RSPA–01–10373 (HM–220D)]

RIN 2137–AD58

Hazardous Materials: Requirements for Maintenance, Requalification, Repair and Use of DOT Specification Cylinders

AGENCY: Research and Special Programs Administration (RSPA), DOT.

ACTION: Final rule.

SUMMARY: In this final rule, RSPA is amending the requirements of the Hazardous Materials Regulations applicable to the maintenance, requalification, repair, and use of DOT specification cylinders. In addition, RSPA is adopting changes to revise the requirements for approval of cylinder requalifiers, independent inspection agencies, and non-domestic chemical analysis and tests. Further, RSPA is removing authorization for the manufacture of DOT specification cylinders made with aluminum alloy 6351–T6. This action is being taken to simplify the regulations, respond to petitions for rulemaking, address recommendations of the National Transportation Safety Board, and enhance the safe transportation of hazardous materials in cylinders.

DATES: *Effective Date:* October 1, 2002.

Incorporation by Reference Date: The incorporation by reference of publications listed in this final rule has been approved by the Director of the Federal Register as of October 1, 2002.

FOR FURTHER INFORMATION CONTACT: Cheryl Freeman or Mark Toughiry, (202) 366–4545, Office of Hazardous Materials Technology, Research and Special Programs Administration.

SUPPLEMENTARY INFORMATION:

I. Background

On October 30, 1998, the Research and Special Programs Administration (RSPA, we) published a notice of proposed rulemaking (NPRM) under Docket HM–220 (63 FR 58460). In the NPRM, we proposed to amend the Hazardous Materials Regulations (HMR; 49 CFR Parts 171–180) to: (1) Establish four new DOT cylinder specifications to replace the 12 current seamless and welded cylinder specifications; (2) revise the requirements for maintenance, requalification, repair, and use of all DOT specification cylinders; and (3) discontinue the manufacture of certain specification cylinders. We took this action because many of our current cylinder specifications have not been updated since their adoption into the regulations over 50 years ago. The proposed changes were intended to enhance operational controls and transportation safety by incorporating into the HMR new manufacturing and testing technologies and clarifying existing regulatory requirements. In addition, the proposed changes addressed three National Transportation Safety Board (NTSB) recommendations for improving the safety of cylinders in transportation. Finally, the proposed changes would have eased the regulatory burden on the regulated industry by incorporating the provisions of more than 30 exemptions into the HMR.

More than 140 commenters submitted over 200 comments in response to the NPRM, including representatives of cylinder and equipment manufacturers, requalifiers, refillers and users, trade associations, gas producers, distributors, shippers, carriers, emergency responders, representatives of federal and state governmental agencies, private consultants, and the general public. In addition, we held a series of public meetings to obtain comments.

Many commenters objected to the proposed new metric-marked cylinder specifications, identified as 3M, 3ALM, 3FM, and 4M. Commenters also opposed the proposed requirement for these new metric-marked cylinders and certain cylinders manufactured to the current specifications, that is, non-metric marked cylinders, to be requalified by ultrasonic examination. These commenters suggested we allow continued manufacture of cylinders to the current DOT specifications and revise the current requirements to include certain enhancements from the metric-marked cylinder proposals. These commenters preferred we wait until after the International Organization for Standardization (ISO) cylinder standards were completed and adopted into the United Nation (UN) Recommendations on the Transport of Dangerous Goods (UN Model Regulations) before we considered incorporating new specification requirements into the HMR. Based on the merits of the comments received, we agree the proposed metric-marked cylinder standards and related proposals that were based on the draft ISO standard should not be adopted. Because of significant opposition to many of the proposals in the 1998 NPRM, we published a notice in the **Federal Register** on February 13, 2002 (67 FR 6667), terminating rulemaking action under Docket HM–220. The termination notice announced that we were withdrawing the proposals applicable to metric-marked cylinders and ultrasonic examination.

We worked closely with the UN Committee of Experts as it developed an international cylinder standard based on the above-referenced ISO requirements. The new international standard was adopted as part of the UN Model Regulations in December 2000. We will address issues related to the harmonization of the U.S. cylinder regulations with the UN Model Regulations in a future rulemaking. The proposals in the 1998 NPRM relating to maintenance, requalification, repair, and use of DOT specification cylinders and approval of cylinder requalifiers, independent inspection agencies, and non-domestic chemical analyses and tests are addressed in this final rule, which has been designated HM–220D (RSPA–01–10373).

The 1998 NPRM proposed to require all cylinders manufactured or rebuilt to the proposed new metric-marked cylinder specifications to undergo inspection and certification by an Independent Inspection Agency rather than an employee of the manufacturing company. This proposal responded to an NTSB recommendation (I–90–009) that RSPA require independent inspection of new and reconditioned low pressure cylinders consistent with current independent inspection requirements for high pressure cylinders. Because we are not adopting the metric-marked cylinder specifications in this final rule, we are not adopting the proposed independent inspection requirements. However, we will address this issue in a rulemaking to harmonize the U.S. cylinder regulations with the UN Model Regulations that we plan to initiate in the near future.

II. Overview of Changes in this Final Rule

In this final rule, we are amending the HMR to:

(1) Prohibit a filled cylinder with a specified service life from being offered for transportation in commerce after its service life has expired.

(2) Remove authorization for the manufacture of DOT specification cylinders using aluminum alloy 6351–T6. Cylinders manufactured with this aluminum alloy have a greater risk of failure than other aluminum cylinders.

(3) Incorporate by reference new and updated Compressed Gas Association (CGA) standards and updated American

Society for Testing and Materials (ASTM) standards.

(4) Require each person who performs a requalification function that requires marking of an inspection or retest date on a cylinder to have approval from the Associate Administrator for Hazardous Materials Safety (Associate Administrator).

(5) Standardize requirements for repair and rebuilding of DOT–4 series cylinders, other than the DOT 4L.

(6) Allow the application of requalification markings on cylinders by using alternative methods that produce durable, legible marks.

(7) Require pressure relief devices on all DOT–3 series specification cylinders to be set at test pressure with a tolerance of −10% to +0 beginning at the first requalification due on or after the effective date of this final rule.

In addition, we are consolidating requirements for obtaining approval to be a cylinder requalifier, independent inspection agency, or to have chemical tests or analyses performed outside the United States on cylinders manufactured outside the United States in a new Subpart I in Part 107.

The safety of cylinders constructed with aluminum alloy 6351–T6 was first raised in a safety advisory and NPRM published in 1987 under Docket HM–176A. With publication of this final rule, further action under Docket HM–176A is terminated.

III. Section-by-Section Review

The following is a section-by-section review of the changes adopted in this final rule and, where applicable, a discussion of comments received.

Part 107

Section 107.1

This final rule adopts the proposal in the 1998 NPRM to remove the reference to a cylinder retester who is registered pursuant to § 173.34(a)(1) from the definition of ''registration.'' Commenters did not address this issue.

Subpart I

The 1998 NPRM proposed to add a new subpart I to Part 107 to consolidate procedures currently in §§ 173.34(e)(2), 173.300a, and 173.300b of the HMR for obtaining approval from the Associate Administrator. The approval procedures address requirements for cylinder requalifiers and independent inspection agencies (IIAs), and to have chemical tests or analyses performed outside the United States on DOT specification cylinders manufactured outside the United States. Commenters generally supported this proposal. This final rule adopts the proposed consolidation in Part 107, with the revisions noted below.

Section 107.803

Prescribes application procedures for approval or renewal as an IIA. These procedures permit an approved IIA to perform other functions relating to the cylinder requalification requirements. The criteria permit the approval of any person or organization technically competent to perform cylinder requalification functions and free from undue influence by persons involved with the fabrication, ownership, or movement of the cylinders that the applicant, if approved, would be called upon to evaluate and certify. We are not adopting a proposal to permit persons or organizations approved by foreign governments to perform these functions. This latter proposal was contingent upon our adopting the metric-marked cylinder specifications proposed in the NPRM.

Section 107.805

Sets forth application procedures for a person seeking approval to perform periodic cylinder requalifications. The NPRM proposed to broaden the current approval requirement to apply to any person who performs a requalification function after which the cylinder is required to be marked with a date. The affected requalification functions include visual inspections, pressure tests, repairs, and rebuilding of cylinders. The new approval procedures will enhance the accountability of the cylinder requalification process. This change was supported by most commenters. However, the National Propane Gas Association (NPGA) and some of its members opposed the proposal because it would require persons who perform only visual inspections of cylinders to obtain DOT approval. NPGA stated that this new approval requirement is burdensome, unenforceable, and an excessive response to a safety problem only identifiable through individual instances of egregious cylinder wear. NPGA also said that the proposal could potentially affect tens of thousands of individuals and many small facilities. We disagree. As we stated in the NPRM, this change ensures the accountability of a person performing visual requalifications. In addition, this change provides RSPA with the authority to revoke or suspend a person's approval for demonstrated noncompliance with the requalification requirements. Also, if an applicant must certify it has the ability to perform requalifications, each applicant's awareness of the importance of compliance should be heightened. We estimate the number of affected requalifiers to be 7,200. Under the provisions in this final rule, these requalifers must submit a letter containing information on their qualifications and the location at which they work. The regulatory burden imposed by this new requirement is minimal. Moreover, this final rule includes a transition period of one year to allow sufficient time for affected individuals to obtain the requisite approvals.

As requested by commenters, we are making editorial changes to paragraph (f) to recognize that visual cylinder requalifications are often performed at the owner's or end-user's facility rather than the requalifier's facility.

Because this final rule expands the approval provisions to apply to repairers and rebuilders, we are replacing the terms ''retester'' and ''retester identification number'' in this final rule with the terms ''requalifier'' and ''requalifier identification number,'' respectively.

Section 107.807

Sets forth the application procedures, currently in § 173.300b, for issuance or renewal of an approval to perform chemical analyses and tests outside the United States on DOT specification cylinders manufactured outside the United States. These procedures are unchanged from current requirements.

Part 171

Section 171.2.

In this final rule, we are adopting the NPRM proposal to revise paragraph (d)(3). The revision clarifies that no person may mark a requalifier identification number (RIN) on a cylinder that has not been requalified according to the applicable requirements.

Section 171.6.

We are revising certain section references in the table of OMB control numbers for consistency with this final rule.

Section 171.7

The NPRM proposed to revise this section to incorporate by reference the latest editions of previously approved CGA Pamphlets and ASTM standards and certain additional ASTM and CGA standards. In this final rule, we are incorporating the 1999 edition of the ASTM standards for tension testing of metallic materials; the 1999 edition of the ASTM standard specification for heat-resisting chromium and chromium-nickel stainless steel plate, sheet, and

strip for pressure vessels; and the 1998 edition of the ASTM standards for notched bar impact testing of metallic materials instead of the 1996 editions proposed in the NPRM. We reviewed the more recent editions and identified no significant differences from the 1996 editions. In addition, we are incorporating the 1997 edition of the ASTM standard specification for liquefied petroleum gases (*see* discussion under ''Section 180.203'' below). We are also incorporating the 1998 edition of the ASTM standard for ultrasonic examination of metal pipe and tubing instead of the 1993 edition proposed in the NPRM. We reviewed the more recent edition and found no significant differences from the 1993 edition. The ASTM standard for ultrasonic examination replaces a 1967 standard that is no longer available and applies to the manufacture of specification DOT 3T stainless steel cylinders. We are not incorporating the ASTM standards addressing the metric-marked cylinder proposals in the NPRM. Further, we are not incorporating CGA pamphlet C–1, ''Methods for Hydrostatic Testing of Compressed Gas Cylinders,'' 1996 edition. It is our understanding that CGA is in the process of completely revising the C–1 standard. We will consider incorporating the revised C–1 standard in a future rulemaking.

Section 171.12

As proposed in the NPRM, we are revising paragraph (b)(15) to include a reference to a provision on Canadian manufactured cylinders contained in current § 171.12a(b)(13).

Part 172

Section 172.101

In the § 172.101 Hazardous Materials Table, for the entries ''Cyanogen,'' ''Germane,'' and ''Iron Pentacarbonyl,'' we are revising the references in column (8b) to specify packaging authorization sections consistent with the materials' toxic properties. Commenters did not specifically address this proposal.

Part 173

Section 173.34

We are adopting the changes proposed in the NPRM and supported by most commenters to move the provisions in this section to Subpart I of Part 107, § 173.301, and Subpart B of Part 180, as appropriate, and remove § 173.34. We are removing all references to § 173.34 in the HMR, and replacing them with the appropriate new section references.

Section 173.40

We are adopting the proposed change to paragraph (a) of this section to prohibit the use of DOT 3AL cylinders made of aluminum alloy 6351–T6 for Hazard Zone A materials. The major domestic cylinder manufacturers of DOT 3AL cylinders discontinued using aluminum alloy 6351–T6 in specification cylinders before July 1990. The prohibition on the use of cylinders made of aluminum alloy 6351–T6 for Hazard Zone A materials is effective on October 1, 2002. After that date, cylinders made of aluminum alloy 6351–T6 may not be filled and offered for transportation in toxic inhalation hazard service. In this final rule, we are adding a provision to permit cylinders filled before October 1, 2002, to be offered for transportation and transported to their ultimate destinations until April 1, 2003. When necessary, cylinders containing unused gas may be returned to the filler. Cylinders prohibited for use under this provision are seamless aluminum cylinders marked ''DOT 3AL'', including exemption cylinders authorized under exemption numbers DOT–E 6498, 7042, 8107, 8364, and 8422, and composite cylinders authorized under exemption numbers DOT–E 7235, 8023, and 8115.

Several commenters requested we add a table in the HMR to identify all cylinders made of aluminum alloy 6351–T6 by date of manufacture, serial number, manufacturer, etc. We agree that a need exists to identify all affected cylinders. We are making this information available from the Associate Administrator and at our web site Homepage at ''*hazmat.dot.gov*''. Making the information available as a separate document permits greater flexibility in de-listing cylinders removed from hazardous material service.

We are adopting paragraph (b) to include current requirements for outage and pressure in cylinders used for toxic materials. This paragraph was inadvertently omitted from the NPRM.

We are not adopting proposed paragraph (c)(1) to require cylinders containing Hazard Zone A and B materials to meet puncture resistance criteria. A number of commenters opposed the puncture-resistance requirement for Zone B materials. These commenters said that Zone B materials have an excellent safety record in transportation, and that the proposed requirements would pose a significant and unjustified financial burden for transporters of Hazard Zone B materials. Several commenters opposed the proposal to add a puncture-resistance requirement even for Hazard Zone A materials. One commenter noted the NPRM did not include statistics on the incidence of cylinder punctures. Other commenters stated that DOT specification cylinders such as the 3A and 3AA have had excellent safety records for a number of years, and there is no substantial evidence to support the need for puncture-resistance testing. Based on these comments, we are not adopting the proposed puncture-resistance requirements. However, minimum thickness requirements for cylinders used to transport Hazard Zone A or B material remain in effect. Further, this final rule includes a new performance requirement, applicable to all cylinders, for metal attachments to be constructed or protected so as to prevent the likelihood of puncturing or damaging hazardous materials packages transported in the same transport conveyance.

In the NPRM, we sought comments on whether the current Hazard Zone A closure requirements in paragraph (c) should be extended to Hazard Zone B materials. Several commenters opposed such an extension. They said that the change is excessive and unjustified, and would require changing the valving on many cylinders used to transport Hazard Zone B materials. Based on these comments, we are not adopting the Hazard Zone A closure requirements for Hazard Zone B materials in this final rule.

We are adopting new paragraph (d) to specify cylinder valve protection requirements for Hazard Zone A and B materials. None of the commenters opposed extending the valve protection requirements to Hazard Zone B materials. Indeed, one commenter stated its company is currently shipping both Hazard Zone A and B materials in cylinders conforming to the current valve protection drop test requirement for Hazard Zone A materials. In this final rule, we are revising the valve protection requirements to require that when a protective cap is used, it must be made of metal. This change responds to a commenter who pointed out that current § 173.301(h)(2)(i) provides for equipping a cylinder with a securely attached metal cap. The commenter stated that nonmetallic caps should not be permitted under § 173.40. We agree, and have included the change.

Several commenters suggested the protection device should be designed to protect against leakage in the event of valve deformation rather than to prevent deformation or breakage of the valve. We disagree. A deformed or broken valve presents a potential safety hazard that could affect the integrity of the

cylinder. One commenter asked for a better definition of the term ''deformation.'' In this context, ''deformation'' means a valve that is bent, distorted, mangled, misshapen, twisted, warped, or in a similar condition. We have added a definition of ''deformation'' in this final rule.

A commenter asked us to revise the drop height requirement from 2 meters (6.5 feet) to 1.2 meters (4 feet) for consistency with ISO Standard 11117 (Gas Cylinders—Valve Protection Caps and Valve Guards for Industrial and Medical Gas Cylinders—Design, Construction, and Tests). We disagree. Because these cylinders are used to transport Division 2.3 materials in Hazard Zone A or B, they must be able to survive severe handling and abuse without leakage of contents. Therefore, a more stringent drop test requirement is warranted. Further, the ISO Standard 11117 drop test requires the cylinder to be filled with water, while the drop test adopted in this final rule requires the cylinder to be empty. Since the tests are conducted under different conditions, the drop heights must be different to assure meaningful test results.

We are adopting paragraph (e), which restates the current prohibition against manifolding or interconnecting cylinders containing toxic materials.

Section 173.115

As proposed in the NPRM, this section permits LC50 values for mixtures to be determined using CGA pamphlet P–20 and adds a definition for ''refrigerant or dispersant gas.''

Section 173.163

A number of commenters opposed the proposal in the NPRM to require cylinders used for hydrogen fluoride to be requalified by ultrasonic examination only. They said that there is no safety justification for the proposal, and it will significantly increase costs for the regulated industry. Commenters noted that ultrasonic examination requires sophisticated equipment and highly trained personnel. They expressed concern that retest facilities do not have infrastructure in place to accommodate the proposed examination procedures. Because of commenter concerns, we are not adopting the ultrasonic examination proposal in this final rule. We are retaining the current requirement for an external visual inspection in place of the hydrostatic test and internal visual inspection. We will continue to permit the use of ultrasonic examination under the exemption program. Issues related to ultrasonic testing will be addressed in a subsequent rulemaking.

Section 173.192

We are revising the section title to reflect that the requirements in this section apply only to Hazard Zone A gases, as proposed. In addition, we are extending the current restriction in § 173.192(a)(3), which limits transportation of DOT 3AL cylinders in arsine and phosphine service to highway and rail, to include all Hazard Zone A gases. Thus, Hazard Zone A gases in 3AL cylinders may only be transported by highway or rail. CGA and another commenter requested that we authorize transportation of DOT 3AL cylinders by vessel and by cargo aircraft. CGA stated that prohibiting such transportation places U.S. companies at an economic disadvantage in the world market. We have some reservations about the CGA comment. Aluminum undergoes a marked reduction in tensile strength when subjected to high temperatures. This occurs at much lower temperatures than for steel cylinders. The potential consequences of a fire on board a vessel or aircraft are more serious than a fire occurring on a truck or rail car. The release of toxic vapors in the confined space of a vessel hold or cargo aircraft compartment could have significant adverse consequences. However, on August 30, 2001, we issued an exemption (DOT–E–12339) that permits the transportation by cargo vessel of DOT 3AL cylinders (6061 aluminum alloy) containing various Division 2.1 and 2.3 gases. The cylinders must be contained inside steel freight containers. We will evaluate the safety record of cylinders transported on cargo vessels under this exemption, and consider incorporating its terms into a regulation of general applicability in a future rulemaking.

Also, we are revising paragraph (c), as proposed, to permit the use of alternative leakage tests having equivalent levels of sensitivity as the current water bath leakage test, upon written approval from the Associate Administrator. Currently, paragraph (c) requires a cylinder containing any amount of phosgene gas to be subjected to a water bath leakage test before it is offered for transportation. CGA noted that the water bath test is conducted at 150° F, and the normal filling densities and liquid full conditions for phosgene cylinders are based on 130° F. For this reason, CGA suggested that we should add a precautionary statement to warn persons that a cylinder filled to 125% of capacity could experience an overfill condition when it is heated to 150° F. Alternatively, CGA suggested the water bath test should be conducted at 130° F. We disagree. The water bath requirements for phosgene cylinders are long-standing regulatory requirements. However, to accommodate CGA's concerns, we are adding a precautionary safety statement to alert requalifiers.

Section 173.198

We are making a minor editorial change to paragraph (a).

Section 173.226

Currently, Division 6.1, Hazard Zone A materials may be shipped in any DOT specification cylinder, except DOT 8, 8AL, and 39. The NPRM proposed a revision to paragraph (a) to permit materials that are poisonous by inhalation (PIH materials) in Hazard Zone A to be transported only in seamless specification cylinders conforming to the requirements of § 173.40. A commenter requested that we continue to permit the use of welded cylinders for PIH materials. We disagree. Because of the inherent risk involved in the transportation of PIH materials, they should only be permitted in cylinders providing the highest level of safety. Therefore, this final rule adopts the change as proposed in the NPRM. This change also provides consistency in packaging assignments with current § 173.192, which authorizes only seamless specification cylinders for Packing Group I materials.

Section 173.227

We are adopting the proposal in the NPRM to revise paragraph (a). The revision authorizes only seamless and welded specification cylinders conforming to the requirements in § 173.40 for transportation of PIH materials in Hazard Zone B.

Section 173.228

As proposed in the NPRM, we are revising paragraph (a) to require bromine pentafluoride and bromine trifluoride, which are Hazard Zone A materials, to be transported only in seamless specification cylinders that conform to the requirements in § 173.40.

Sections 173.300a–173.300c

We are moving the provisions contained in these sections to new Subpart I of Part 107. We are deleting §§ 173.300a, 173.300b, and 173.300c.

Sections 173.301–173.301b

We are revising § 173.301 to specify the general shipper requirements for the use of specification cylinders. These requirements include general prefill requirements, maintenance and legibility of markings, pressure relief devices (PRDs), valve protection, manifolding of cylinders, and charging

of foreign cylinders. We are removing the cargo tank manifolding requirements currently in § 173.301(d), and placing them with other cargo tank requirements in § 173.315. A derivation table showing the relocation of the requirements appeared in Part X of the preamble in the NPRM.

Paragraph (a) includes general cylinder qualification requirements. We are revising the wording in paragraph (a)(2) in response to several commenters who stated the proposed wording implied that defective PRDs could be repaired. This was not our intent. The wording is revised to state that, in some cases, the *cylinder* may be repaired and requalified if the work is performed according to Part 180.

In the NPRM, we proposed to place in paragraph (a)(4) a current provision authorizing the use of a cylinder with a higher marked pressure limit when a cylinder of the same specification, but a lower marked pressure limit, is prescribed. We proposed no change to the wording. A commenter suggested that, when a cylinder with a higher marked pressure limit is used for Division 2.2 gases, the PRD setting should be based on the lowest acceptable test pressure of the cylinder for the particular gas service. We disagree. This is a long-standing regulatory requirement with a demonstrated safety benefit. If a higher pressure cylinder is chosen for a particular service, another user may not be aware the PRD setting has been lowered. If the cylinder were over-heated or over-pressurized, a premature release of product could result.

We are making a minor editorial change in the second sentence of paragraph (a)(5). The sentence in the NPRM stated ''This requirement does not apply to a cylinder filled before the requalification due date''. In response to a comment, the sentence is revised for clarification to read ''This *prohibition* does not apply * * *'' Another commenter suggested the first sentence should be revised to read ''No person may fill a cylinder overdue for periodic requalification with a hazardous material.'' We disagree. HMR requirements for filling a cylinder do not apply unless the cylinder is offered for transportation.

We are revising paragraph (a)(6), as proposed, to prohibit the offering for transportation and transportation in commerce of a filled cylinder after its specified service life has expired. For example, DOT 3HT cylinders would be prohibited from transportation 24 years after the date of the original test or 4,380 pressurizations, whichever occurs first (*see* current § 173.34(e)(15)(ii)(C)). Similarly, aluminum lined, hoop wrapped, and fiber reinforced plastic composite cylinders would be prohibited from transportation after 15 years. Several commenters requested a revision to allow the transportation of affected non-leaking cylinders for reprocessing or disposing of the cylinder contents. Another commenter requested we require the cylinders to be stamped as condemned or be rendered unserviceable when the authorized service life has expired. We agree, and have adopted the suggested changes in this final rule.

We are revising the wording in proposed paragraph (a)(7) to prohibit the pressure of the hazardous material at 55° C (131° F) from exceeding 5/4 of the service pressure of the cylinder. Commenters pointed out the ''5/4'' was omitted from the text in the NPRM. This was an oversight. We have corrected the text in this final rule.

Paragraph (b) sets forth requirements for cylinder markings and is adopted as proposed in the NPRM.

Paragraph (c) specifies requirements for toxic gases and mixtures and is adopted as proposed in the NPRM.

Paragraph (d) addresses gases capable of combining chemically. In this final rule, we are prohibiting the use of DOT 3AL cylinders made of aluminum alloy 6351–T6 for gases having pyrophoric properties. Commenters requested we allow time for transporting the affected cylinders for reprocessing or disposal of the cylinder's contents. We agree time should be provided for transporting the cylinders. We are providing a transition period of six months after the effective date of the final rule to provide for transportation of cylinders filled before the effective date of the final rule.

As proposed in the NPRM, we are adopting paragraph (e). This paragraph restates the current requirement to prohibit a cylinder from being offered for transportation unless it was filled by the cylinder owner or with the owner's consent.

Paragraph (f) sets forth requirements for PRDs. The NPRM restated the current provision in § 173.34(d) to require a cylinder filled with gas and transported in commerce to be equipped with one or more PRDs sized and selected in accordance with CGA Pamphlets S–1.1 and S–7. Compliance with paragraph 9.1.1.1 of CGA Pamphlet S–1.1, which requires periodic replacement of a PRD, is not required. Several commenters objected to this provision, stating compliance with paragraph 9.1.1.1 should be mandatory. These commenters cited data generated by Transport Canada and industry tests that suggest a large percentage of PRDs fail to operate as designed. As we stated in the 1998 NPRM (63 FR 58465), we have previously proposed voluntary compliance with paragraph 9.1.1.1 of CGA Pamphlet S–1.1. Commenters generally opposed this proposal, citing its cost and the lack of incident data justifying the requirement. In the NPRM, we asked for data and comments on the cost, effectiveness, and need for adopting paragraph 9.1.1.1. Commenters did not provide specific information. Therefore, we are not adopting paragraph 9.1.1.1 at this time. However, we will examine this issue in a future rulemaking, as necessary.

We are revising the wording in proposed paragraph (f)(2) that would have required a PRD, when installed, to be in the vapor space of the cylinder. Several commenters objected to requiring the PRD to be in the vapor space of a cylinder containing liquefied Division 2.2 gases. They stated the proposal would require valve redesign at substantial costs and would be ineffective in tube trailers and other cylinders loaded in horizontal positions. The commenters suggested we revise the provision to require the PRD to be ''in communication with the vapor space.'' We agree. The paragraph is revised to require the inlet port to the relief channel to be in the vapor space of the cylinder.

We also are revising the wording of proposed paragraph (f)(3) that would have required the pressure relief setting (the start-to-discharge or ruptured pressure) of a PRD for DOT–3 series cylinders to be not less than the minimum designed test pressure. In the NPRM, the proposed allowable tolerances for these PRDs were minus zero to plus 10%. Many commenters were concerned about the cost of producing PRDs with tolerances of minus zero to plus 10%. They stated that the proposed amendment would necessitate retrofitting many cylinders with new PRDs. Several commenters reiterated that CGA Pamphlet S–1.1 stipulates a maximum burst pressure for a disk as minus 10% to zero of test pressure. They stated that we provided no justification for requiring a cylinder pressure greater than the cylinder's specified test pressure. They also suggested that, in some situations, a shipper may want a cylinder to be fitted with a PRD that will function at a pressure much lower than the test pressure of the cylinder.

Considering the comments received, we believe a setting of 100% of test pressure, with an allowable tolerance of minus 10% to plus zero of its setting for a PRD, is appropriate. This will provide a reasonable balance between keeping a

gas in a cylinder and preventing the cylinder from rupturing in case of a fire or overfill. PRDs designed to release at not less than test pressure, within the allowable tolerance, will eliminate the possibility of gas release through the relief device at a temperature less than or equal to 54° C (130° F). At the same conditions and test pressure, the safety factor for cylinder rupture is 1.6. It is our understanding, based on discussions with gas distributors, that many major gas distributors using DOT–3 series cylinders are currently setting the PRDs at 90–100% of test pressure for toxic and flammable gases. Because it is common practice for many shippers of DOT–3 series cylinders to replace the PRD at the time of a cylinder's requalification, we believe this final rule will result in minimal incremental cost. Further, for most gases, the increased PRD setting will not significantly affect the performance of cylinders in bonfire tests. To allow users sufficient time to modify cylinders to meet the new PRD settings, we are providing that each cylinder must be brought into conformance at the first requalification of the cylinder after the effective date of this final rule.

We are not adopting the change in proposed paragraph (f)(4) that would have required a PRD to be visually inspected for damage before filling the cylinder. We agree with commenters who stated that a visual inspection of the PRD will not detect defects associated with internal components and their ability to function. Neither are we adopting proposed paragraph (f)(5) that would have required a cylinder filling facility to test a PRD for leaks before offering a filled cylinder for transportation. Rather, we are adding a new subparagraph to paragraph (a) to include the long-standing regulatory requirement, currently in § 173.34(d), that safety relief devices must be tested for leaks before the filled cylinder is transported. We are also adding language pertaining to repair of leaking fuse plug devices, also currently in § 173.34(d), that was inadvertently omitted in the NPRM. In addition, several commenters suggested revising the wording to prohibit a cylinder with a leaking PRD from being offered for transportation. We agree with the commenters. We have included a restriction on leaking PRDs in paragraph (a)(2) of this final rule.

We are correcting the wording that appeared in proposed paragraph (f)(6)(i)(B), adopted as paragraph (f)(5)(i)(B) in this final rule, to state that a PRD is not required on a cylinder of 305 mm (12 inches) or less in length and 114 mm (4.5 inches) or less in outside diameter. However, if the cylinder is filled with a nonliquefied gas to a pressure of 1800 psig or higher, then it must have a PRD.

Paragraph (g) specifies requirements for manifolding cylinders in transportation. We are revising the wording in proposed paragraph (g)(1) that would have required the PRD on manifolded cylinders containing any compressed gas to be arranged to discharge upward and unobstructed to the open air. Our intent for expanding the original requirement in the HMR from flammable gases to all compressed gases was to protect personnel and adjacent cylinders from gases released due to a PRD function. Upon further consideration, we agree with commenters that the need for PRDs to discharge upward is more crucial for horizontal cylinders containing flammable gases. Discharges of flammable gases could result in flame impingement on personnel or adjacent cylinders. We agree the requirement is not necessary on cylinders containing nonflammable gases or on vertical cylinders. We revised the final rule to reflect these changes.

Commenters were also concerned with the wording in proposed paragraph (g)(1)—''equivalent valve protection required in § 173.301(h).'' These comments said that the wording implies that manifolded cylinders must be drop tested in the manifolded configuration. This was not our intent. Therefore, we are revising the wording to specify that valves and PRDs must be protected by framing, a cabinet, or other method.

Paragraph (h) contains cylinder valve protection requirements. The requirements adopted in this final rule prescribe a performance-oriented approach to valve assembly protection. The requirements include a drop test to verify the performance of valve protection devices. In response to commenters, we are revising paragraph (h)(1) to grant an exception from the valve assembly protection requirements for cylinders used as fire extinguishers, acetylene MC cylinders, and Medical E styles with a water capacity of 300 in^3 or less.

Several commenters also suggested that the drop test should be performed at 2 m (6.5 ft) instead of 1.8 m (6 ft) for consistency with the 2 m (6.5 ft) puncture resistance requirement in § 173.40. We disagree. We are prescribing a 6-foot drop test for consistency with performance requirements adopted for cylinders by the UN Committee of Experts on the Transport of Dangerous Goods. The final rule provides a transition period of five years, until October 1, 2007, for cylinders to be brought into conformance with this requirement. In this final rule, we are revising the language proposed in the NPRM to clarify that cylinders manufactured before October 1, 2007, must conform to current valve protection requirements.

The Chlorine Institute stated that tracking protective valve hoods to make sure they are used on the type of cylinder on which they were tested is unrealistic. The Chlorine Institute said hoods are frequently interchanged with others on cylinders in the same type of service and suggested that a valve hood that has been tested on at least one cylinder specified for a particular gas should be accepted for use with the manufacturer's other cylinders in the same or lower net weight service. We recognize that protective caps and hoods may be interchanged among cylinders. However, we are concerned that different protective hoods may not provide the same level of protection. If cylinder hoods and caps are interchanged among different cylinders, each must provide an equivalent level of safety to the performance standard specified in this final rule.

Paragraph (i) addresses cylinders mounted on motor vehicles or in frames. In the NPRM, we proposed revisions to clarify the following points: (1) Any DOT specification cylinder over 6.5 meters transported in container-on-flat-car (COFC) or trailer-on-flat-car (TOFC) service *by rail* must be transported under conditions approved by the FRA; (2) the force the valve and PRD must withstand is equal to twice the weight of the cylinder and the framework assembly; and (3) a discharge of any compressed gas from the PRD must not contact personnel or adjacent cylinders. CGA requested we revise paragraph (i) to: (1) Provide examples of protective structure, such as rear bumpers, frame rails, and bulkheads; (2) add a detailed description of the forces involved in a road accident (static compressive longitudinal force, parallel to the ground, equal to twice the weight of the loaded tube trailer); and (3) add language describing the latest technology in front safety design for tube trailers. CGA stated that an in-tube safety device has the burst disc inside the neck of the tube. Therefore, if a front end collision occurs, the safety device will not be sheared off, and product will not be discharged. The clarifications proposed in the NPRM in paragraph (i) primarily address service by rail. We agree with CGA that requirements for cylinders transported horizontally by road (DOT 3T and DOT 3AX and 3AAX cylinders configured as tube trailers) may need to be updated. However, that

issue is beyond the scope of this rulemaking. We will address this issue in a future rulemaking.

Paragraph (j) prohibits filled non-DOT specification cylinders, except for certain foreign cylinders, from being transported in the United States. Two commenters asked us to revise paragraph (j) to specifically permit transportation of non-specification cylinders used as fire extinguishers in accordance with § 173.309. We agree, and have revised paragraph (j) accordingly.

Paragraph (k) specifies requirements for transportation of foreign cylinders within a single port area. A commenter suggested we define a single port area as a distance of 360 miles from any port. That issue is beyond the scope of this rulemaking. The U.S. Coast Guard expressed concern that this proposal would impose a greater burden on cylinders intended to be filled in the United States and shipped for export only. The Coast Guard stated that the inflatable life raft servicing industry relies on this provision to transport foreign cylinders taken from foreign flag vessels to and from servicing industries. The provision referenced by the Coast Guard is adopted as paragraph (l) in this final rule, with no change from current requirements. Further, we issued an exemption on December 31, 2001, to authorize non-specification cylinders used in self-inflating life-saving appliances to be transported between a vessel and a USCG-approved servicing facility.

Another commenter opposed the proposal in the NPRM that foreign cylinders transported within a single port area must be transported in a closed freight container. This commenter stated that such foreign cylinders must be certified by the importer to provide an equivalent level of safety as DOT specification cylinders. For this reason, there is no need to require their transportation in a closed freight container. We disagree. The requirement is intended to reduce the possibility a foreign cylinder may inadvertently be included in a load of DOT-authorized cylinders. The European Industrial Gases Association urged us to allow the use in the United States of cylinders of foreign origin that have been approved for use in Europe by the European Conference of Ministers of Transport. This issue is beyond the scope of this rulemaking. However, we may consider it in a future action.

As proposed in the NPRM, we are adopting paragraph (l), which restates the current requirements for filling foreign cylinders for export.

Paragraph (m) proposed to prohibit the use of metal cylinder attachments with sharp features that may cause damage to other packages. This proposal responds to NTSB Recommendation I–92–001, which urges RSPA to require attachments to DOT hazardous materials packagings to be designed to minimize the risk of puncturing other hazardous materials packagings. Several commenters expressed confusion as to the meaning of the term ''sharp'' as used in the NPRM. They stated that the term is vague and not based on any objective measure. They also said that it is impossible to guarantee that any corner, edge, or other feature cannot cause damage to other freight. Commenters were also concerned that variations on how other freight is packaged, the other freight's susceptibility to impact damage, the vehicle speed, and the vehicle acceleration and deceleration speeds make it impossible to evaluate a cylinder attachment's performance in transportation. We agree it may not be possible to prevent a corner, edge, or other feature of a cylinder attachment from damaging other freight in an accident. However, we believe attachments can be designed to minimize potential damage. In response to comments, the provision in this final rule is written as a performance standard.

Section 173.301a

We are adopting, as proposed, this new section containing the current requirements for the pressure in a cylinder at 70° F and 130° F and a grandfather provision currently in § 173.34(b).

Section 173.302

We are adopting this section containing general requirements for filling specification cylinders with a nonliquefied (permanent) compressed gas. Paragraph (a) sets forth general requirements for transporting a cylinder filled with a nonliquefied compressed gas. It is adopted as proposed in the NPRM.

Paragraph (b) specifies requirements for aluminum cylinders in oxygen service. We are revising proposed paragraph (b)(1) to require an aluminum cylinder in oxygen service to be equipped with brass or stainless steel valves only. A commenter noted the valves on many medical oxygen cylinders are chrome-plated in areas that do not come into contact with the oxygen. Our intent is to prevent oxygen from coming into contact with an aluminum valve having internal rubbing or abrading aluminum parts. Therefore, we are revising proposed paragraph (b)(1) to require any portion of the valve that contacts the oxygen in the cylinder to be made of brass or stainless steel.

Several commenters pointed out that proposed paragraph (b)(3) cites former Federal specification RR–C–901b and not the current RR–C–901C. The paragraph cites are corrected in this final rule.

Paragraph (c) addresses cylinders containing oxygen that is continuously fed to fish tanks. It is adopted as proposed in the NPRM.

Paragraph (d) permits shipment of Division 2.1 materials in aluminum cylinders only when transported by highway, rail, or cargo-only aircraft. A commenter requested we revise paragraph (d) to authorize the transportation of specification aluminum cylinders containing Division 2.1 gases by vessel. As stated above in the preamble discussion for § 173.192, we will evaluate the safety record of cylinders transported on cargo vessels under an exemption issued on August 30, 2001. We will consider incorporating the terms of this exemption into a regulation of general applicability if the safety record indicates that such incorporation is appropriate.

Another commenter suggested there is no scientific rationale for limiting the transportation of Division 2.1 materials in aluminum cylinders to cargo-only aircraft. As we have previously explained, a cylinder must be able to withstand fire without rupture for at least 90 minutes to enable an aircraft to reach the nearest airport and land safely in the event of an emergency. Heat exposure such as a pressurized aluminum cylinder would experience in a fire would cause the cylinder to burst well before 90 minutes had elapsed and possibly disable the aircraft.

Section 173.302a

In this final rule, we are adopting this new section specifying requirements for filling a cylinder with a nonliquefied compressed gas.

Paragraph (a) sets forth detailed filling requirements. A commenter requested we revise the filling requirement applicable to flammable gases in DOT 39 cylinders. Current § 173.302(a)(4) says that, for DOT 39 cylinders used to transport flammable gas, the ''internal volume may not exceed 75 cubic inches.'' The commenter suggested that, as currently written, it is not clear whether the term ''internal volume'' refers to the amount of gas permitted in the cylinder or the total capacity of the cylinder. We agree. The volume limitation is intended to apply to a cylinder's internal volume. In this final

rule, we revised paragraph (a)(3) to clarify that the restriction applies to a cylinder's internal volume.

Paragraph (b) specifies special filling limits for DOT 3A, 3AX, 3AA, 3AAX, and 3T cylinders. We are adopting paragraph (b)(3)(iv), as proposed, to provide for a cylinder's average wall stress calculation to be determined through computation of the rejection elastic expansion limit (REE) in accordance with CGA Pamphlet C–5, or through the use of the manufacturer's marked REE on the cylinder. A commenter requested that we also allow the use of the standard calculated values listed in CGA Pamphlet C–5 or the use of a previously determined REE marked on the cylinder. It was not our intent to prevent use of standard calculated values listed in CGA Pamphlet C–5. In this final rule, we revised the wording to authorize the use of these values. However, we are not authorizing the use of an REE marking applied to the cylinder by a person other than the manufacturer because it may be inaccurate.

Paragraph (c) prescribes requirements for carbon monoxide. In response to a CGA petition (P–1082), we are removing the 5/6 filling pressure limitation for DOT 3AL cylinders in carbon monoxide service. CGA furnished information to support its conclusion that, although evidence shows carbon monoxide can cause stress corrosion cracking in steel cylinders, there is no evidence carbon monoxide causes corrosion cracking or carbonyl formation in aluminum cylinders. We agree with CGA, and are permitting a DOT 3AL cylinder to be filled to its marked service pressure when used for carbon monoxide. We also modified the paragraph to indicate that the 5/6 pressure limitation applies to steel cylinders.

Paragraph (d) sets forth requirements for diborane and diborane mixtures. It is adopted as proposed in the NPRM.

Section 173.304

This section specifies filling requirements for cylinders used to transport liquefied compressed gas. With minor editorial revisions, it is revised as proposed in the NPRM.

Section 173.304a

This new section, proposed in the NPRM, addresses additional requirements for transporting liquefied compressed gases in specification cylinders. Paragraph (a) specifies detailed filling requirements for a number of gases, including a table of maximum filling densities. As requested by commenters, this section is revised in the final rule to add DOT 3AL cylinders to the authorized list of cylinders. We inadvertently omitted the DOT 3AL reference from the NPRM.

In paragraph (a)(3), the NPRM proposed extending the provision limiting cylinder volume to 75 cubic inches, which currently applies to liquefied petroleum gas and Division 2.1 materials listed in the § 173.304 table, to all Division 2.1 materials. One commenter suggested this proposal would have a negative impact on companies using DOT 39 cylinders larger than 75 cubic inches in aerosol applications. We plan to address issues related to requirements for all cylinders used in aerosol applications in a future rulemaking. This rulemaking will harmonize, to the extent possible, the U.S. cylinder regulations with international regulations recently adopted by the UN Committee of Experts on the Transport of Dangerous Goods. Therefore, in this final rule, we are not adopting paragraph (a)(3) as proposed. We will address filling limits for liquefied compresses gases and Division 2.1 materials in a future rulemaking.

Paragraph (b) is reserved.

Paragraph (c) establishes requirements for verifying a cylinder's contents and is adopted as proposed in the NPRM.

Paragraph (d) specifies filling requirements for liquefied petroleum gas and is adopted as proposed in the NPRM. One commenter requested a change to the filling densities. The request is beyond the scope of this rulemaking. It will be considered under a separate rulemaking.

Paragraph (e) sets forth requirements for carbon dioxide, refrigerated liquid, and nitrous oxide, refrigerated liquid. It is adopted as proposed in the NPRM.

Section 173.305

This section is revised as proposed in the NPRM to add a reference to § 173.301 to paragraph (b).

Section 173.306

This section is revised as proposed in the NPRM to change the reference for overpack requirements.

Section 173.315

Consistent with the NPRM, this final rule adds paragraph (q) to this section. Paragraph (q) specifies conditions under which cargo tanks containing anhydrous ammonia may be manifolded.

Section 173.334

This section establishes requirements for organic phosphates mixed with compressed gas. In this final rule, this section is amended as proposed, except we are not adopting the proposed metric-marked cylinder provisions.

Section 173.336

This section sets forth requirements for nitrogen dioxide, liquefied, and dinitrogen tetroxide, liquefied and is amended, as proposed, except we are not adopting the proposed metric-marked cylinder provisions. We are correcting the referenced Federal Specification RR–C–901C paragraph cites.

Section 173.337

This section prescribes requirements for nitric oxide and is amended, as proposed, except we are not adopting the proposed metric-marked cylinder provisions. We are correcting the referenced Federal Specification RR–C–901C paragraph cites and adding a reference to § 173.40 in the introductory paragraph that was inadvertently omitted in the NPRM.

Part 177

Section 177.840

We are revising current paragraph (a)(1) to allow horizontal loading of cylinders containing Class 2 materials if the cylinders are designed so the inlet to the PRD is located in the vapor space. The cylinders must be properly secured during transportation.

We had proposed to require the use of cylinder restraint systems to reduce the likelihood of cylinders being ejected from a vehicle in the case of an accident. We issued this proposal in response to NTSB Recommendation I–90–008, which urges RSPA to require hazardous materials packages to be secured with adequate cargo restraint systems to prevent their ejection from the vehicle during transportation.

Considering the wide variation in cylinder sizes, and the various types of restraints that would be required, we solicited information in the NPRM on the NTSB recommendation. We asked commenters to address anticipated safety benefits and the costs of requiring the use of restraint systems, particularly on small businesses. Numerous commenters objected to the proposed amendment. They stated it is common practice to secure carbon dioxide and other Division 2.2 gases in horizontal positions. NPGA requested that we allow Class 2 gases to be loaded in a horizontal position if the cylinder is designed so the inlet to the PRD is located in the vapor space. We agree with NPGA that the inlet port must be in the vapor space.

Several commenters also objected to our usage of the word ''lash.'' This term appears in the current regulations, and

we have received no previous requests for a revision. The commenters stated that lashing should be considered an appropriate means of securing cylinders, but should not be made a prescriptive requirement. One commenter asked us to remove the wording ''and securely attached to motor vehicle.'' The commenter stated that thousands of low-pressure cylinders containing nonliquefied gases are shipped on stretch-wrapped pallets. The commenter said requiring such pallets to be securely attached to a motor vehicle would be overly burdensome, costly to the regulated industry and consumers, and would provide no added safety benefits.

We reviewed the HM–220 comments and considered the wide range of packaging configurations and sizes that may be loaded on a vehicle. We find it neither practicable nor cost-beneficial to require carriers to secure each hazardous material package on a vehicle in a manner that will withstand every conceivable accident or overturn situation. The current regulations require hazardous materials packages containing Class 2 (gases), Class 3 (flammable liquid), Division 6.1 (toxic), Class 7 (radioactive), or Class 8 (corrosive) materials to be secured against movement within the vehicle under conditions normally incident to transportation. We believe this standard provides an acceptable level of safety. However, we recognize the requirement should be broadened to include all hazardous materials packages rather than limited to hazardous materials of certain hazard classes. We will propose these changes in a future rulemaking.

Part 178

Section 178.35

This section establishes general requirements for cylinders. We are revising paragraph (c)(3)(iv) to reference a new Appendix C, which provides illustrations of recommended locations for selecting test specimens from welded cylinders. In the NPRM, we proposed the use of Appendix C for metric-marked welded cylinders. Although commenters opposed adoption of the metric-marked cylinder proposals, they requested that we include the appendix as guidance of use with non-metric-marked cylinders.

We are revising paragraph (d) of this section to set forth requirements, established elsewhere in this final rule, applicable to specification cylinders. A cylinder may not be constructed of material having seams, cracks or laminations or other defects, and metal attachments must be constructed to prevent the possibility of puncturing or damaging other hazardous materials packages.

We are revising paragraph (f), as proposed in the NPRM, to except DOT 3E cylinders from the requirement to be marked with an inspector's mark or serial number.

Section 178.45

We are revising paragraph (h) to update an old incorporation by reference.

Section 178.46

This section prescribes requirements for DOT 3AL seamless cylinders. This final rule revises the tables in paragraph (b)(4) to remove aluminum alloy 6351–T6 as an authorized material for the manufacture of DOT 3AL seamless cylinders. In addition, in Table 1, this final rule makes several changes to the chemical composition limits for 6061 alloy for consistency with limits stated in The Aluminum Association Standards and Data, 1993 edition. The currently stated silicon (Si) maximum of 0.80% is revised to read 0.8%, the currently stated iron (Fe) maximum of 0.70% is revised to read 0.7%, the currently stated magnesium (Mg) minimum of 0.80% is revised to read 0.8%, and the currently stated Mg maximum of 1.20% is revised to read 1.2%. Finally, the currently stated Table 1 limit of 0.01 for the chemical composition of lead (Pb) and bismuth (Bi) is changed to 0.005.

Appendix to Subpart C of Part 178

We are adopting an appendix containing illustrations of the recommended locations for taking test specimens for specific welded cylinder designs.

Part 180

Part 180, Subpart C

We are adopting a new subpart to specify requirements for the continuing qualification, maintenance, repair, and rebuilding of DOT specification and exemption cylinders. Most of the requirements are currently contained in §§ 173.34 and 173.301.

Section 180.201

This section lists the entities to which Subpart C applies and is adopted as proposed in the NPRM.

Section 180.203

This section contains definitions for terms used throughout Subpart C.

We are adopting the definition of ''commercially free of corrosive components'' as proposed in the NPRM. CGA and several other commenters requested we revise the wording to read ''a hazardous material having a *moisture pressure* dew point at or below * * *'' They stated the change would recognize water as the contaminant at service pressure. NPGA stated propane has a dew point of −42.2° C (−44° F). NPGA noted that ASTM D–1835 ''Standard Specification for Liquefied Petroleum (LP) Gases'' incorporates provisions to control moisture content and the level of corrosive sulfur compounds in propane. NPGA urged us to adopt the moisture content criteria contained in the ASTM standard. We agree an exception from hydrostatic test requirements should be granted for cylinders used exclusively for the transportation of petroleum gas that is essentially free of moisture and corroding components. We are revising the table in § 180.209(g) accordingly.

We are adopting the definitions of ''condemn,'' ''defect,'' and ''elastic expansion,'' as proposed in the NPRM.

The NPRM proposed a definition for ''filled.'' A commenter stated the words ''charged'' and ''filled'' are used interchangeably in Part 173 of the HMR and suggested we add the wording ''(or charged)'' following the word ''filled.'' We agree; this final rule adopts a definition for ''filled or charged.''

We are adopting the definition of ''non-corrosive service'' as proposed in the NPRM, revised slightly for clarity.

We had proposed to define the term ''over-heated'' to mean a condition in which any part of a cylinder has been subjected to a temperature in excess of 176° C (350° F). Several commenters noted a temperature of 176° C (350° F) is conservatively low for steel. They requested we reference a temperature of 176° C (350° F) for aluminum and 343° C (650° F) for nickel or steel. We agree, and revised the definition accordingly in this final rule. In addition, we revised the definition to indicate that a cylinder is over-heated if the temperature of any portion of the cylinder reaches the specified temperatures. This change responds to the concerns expressed by firefighters discussed below under § 180.205.

We had proposed to define the term ''over-pressurized'' to mean a condition in which a cylinder has been subjected to an internal pressure in excess of 30% of its test pressure. This definition was intended to apply to the pressure to which a cylinder may be subjected during requalification testing, not to a cylinder's service pressure or to pressure during normal transportation operations. Since publication of the NPRM, we have determined that a single definition for ''over-pressurized'' that would apply to all cylinders is not

practicable. Pressure limits may vary depending on the design specification of the cylinder, its material of construction, and the material transported. Therefore, we are not adopting the proposed definition in this final rule. Persons who use cylinders to transport hazardous materials in commerce should be aware that a cylinder subjected to pressures beyond its design capability may be rendered unfit for continued service. Any person in possession of an over-pressurized cylinder must determine the cylinder's suitability for continued use prior to offering the cylinder for transportation in commerce.

We are adopting the definitions for ''permanent expansion,'' ''proof pressure test,'' ''rebuild,'' ''rejected cylinder,'' ''repair,'' ''requalification,'' ''requalification identification number or RIN,'' ''test pressure,'' ''total expansion,'' ''visual inspection,'' and ''volumetric expansion test'' as proposed in the NPRM.

Section 180.205

This section prescribes general requirements for the continuing qualification and use of cylinders and for persons who perform cylinder requalification functions. Paragraph (a) states that a cylinder must be an authorized packaging. Paragraph (b) sets forth requirements for persons performing requalification functions. We are adopting both as proposed in the NPRM.

In response to comments, we made several editorial revisions to paragraph (c). Several commenters requested we revise the paragraph to state a cylinder may be requalified at any time *prior to the date* requalification is due. They also suggested we reiterate the restriction against filling and offering a cylinder for transportation after its authorized service life has expired. We agree, and include the suggested changes in this final rule. Also, we are revising paragraph (c)(4) to require the set pressure of PRDs on DOT–3 series cylinders to be set at test pressure with a tolerance of plus zero to minus 10% at the first requalification due on or after October 1, 2002, as discussed in the preamble discussion to 173.301(f)(4).

Two commenters suggested we revise paragraph (d), which prescribes conditions requiring test and inspection of cylinders, to require the requalification of any DOT specification cylinder used for nonhazardous material service prior to its being returned to hazardous material service. This change is beyond the scope of this rulemaking and, therefore, is not adopted in this final rule. For the same reason, we are not adopting a suggestion to require any cylinder removed from service to be marked with a notation that the cylinder has been removed from service.

We revised the proposed wording in paragraph (d)(3) that read ''the cylinder has been over-heated or over-pressurized'' to state, instead, that the cylinder ''shows evidence of, or is known to have been'' over-heated. We removed the reference to over-pressurized cylinders for the reasons noted above in the discussion concerning the definition for ''over-pressurized.'' Any person in possession of an over-pressurized cylinder must determine the cylinder's suitability for continued use prior to offering the cylinder for transportation in commerce.

Paragraph (e) addresses cylinders containing Class 8 liquids. In this final rule, we modified the paragraph for consistency and clarity.

Paragraph (f) sets forth visual inspection requirements. A commenter suggested we revise the paragraph (f) introductory text to require an internal and an external visual inspection to be performed prior to the pressure test, and another internal inspection for contaminants and damaged threads after the pressure test. The commenter stated that performing the visual inspection prior to the pressure test will save time if the cylinder is unfit for pressure testing. The commenter stated that a cylinder that ruptures during the pressure test can damage equipment and property and may cause operational delays. We disagree. Some requalifiers have modernized their operations and perform hydrostatic tests on all cylinders, followed by visual inspections. We find no reason to limit the requalifiers' flexibility in deciding whether to perform the visual requalifications before or after the pressure test.

We are revising paragraph (f)(2) to require any coating or attachments that would inhibit inspection of the cylinder to be removed prior to performing a visual inspection. We had proposed to require any vinyl or plastic coating on a cylinder to be completely removed prior to performing a visual inspection. CGA suggested we revise the provision to apply only to cylinders with removable vinyl or plastic coatings. Other commenters suggested the removal of both internal and external vinyl or plastic coatings and, when necessary, layers of paint. A different commenter questioned whether wire wrapping should be remove prior to performing the inspection. In consideration of the comments, we are requiring the removal of any coating, attachment, or wrapping that hinders proper inspection of the cylinder surface.

We had proposed in paragraph (f)(4) to require DOT 3AL cylinders to be inspected for evidence of sustained load cracking in the neck and shoulder areas in accordance with the cylinder manufacturer's written recommendation. The manufacturer's recommendation must be approved in writing by the Associate Administrator. A commenter suggested we clarify that the procedure applies only to cylinders made of aluminum alloy 6351–T6. We agree. In this final rule, we revised the provision to require the inspection only for DOT specification or exemption cylinders made of aluminum alloy 6351–T6.

We are not adopting the provision in paragraph (g) to require the pressure test to be conducted in accordance with the procedures in paragraphs 4 and 5 of CGA Pamphlet C–1. One commenter objected to incorporation of Pamphlet C–1. In addition, it is our understanding that CGA is in the process of completely revising the C–1 standard. In this final rule, we revised paragraph (g) to incorporate the requirements for pressure testing cylinders that are currently in § 173.34(e)(4). We will consider incorporating the revised C–1 standard in a future rulemaking.

We had proposed to provide for use of an ultrasonic examination as an alternative requalification method. We had also proposed to allow other nondestructive test methods with the approval of the Associate Administrator. As discussed in the above referenced HM–220 termination notice, we are not adopting these provisions. We will continue to permit the use of ultrasonic examinations and other nondestructive methods under the exemption program.

Paragraph (h) establishes criteria for rejecting cylinders. We are adopting the provision in paragraph (h)(1) prohibiting a rejected cylinder from being marked as meeting the requirements of this section. A commenter requested we revise the paragraph to recognize that CGA Pamphlet C–6.2 establishes levels of damage for fiber reinforced exemption cylinders, some of which is repairable. This issue is more appropriately addressed in the specific exemptions authorizing use of fiber reinforced cylinders. Provided it is permitted under the exemption, repairs of such cylinders in accordance with CGA Pamphlet C–6.2 are permitted. Paragraph (h)(4)(iii) of this final rule permits a cylinder with a service pressure of less than 900 psig to be repaired in accordance with an

exemption covering the manufacture, requalification, or use of the cylinder.

Paragraph (i) sets forth criteria for condemning cylinders. We had proposed in paragraph (i)(1)(viii) to require an aluminum or aluminum-lined cylinder to be condemned if exposed to a temperature exceeding 177° C (350° F). Numerous commenters representing fire fighters and emergency responder organizations strongly objected to the proposal. They stated it would require the removal of aluminum and composite exemption cylinders used as self-contained breathing apparatus (SCBAs) based on possible exposure to temperatures in excess of 350° F. These commenters noted that most SCBAs are exposed to temperatures exceeding 177° C (350° F) whenever they are carried into a fire. The commenters suggested that the NPRM proposal would require replacement of SCBAs after each fire exposure, resulting in substantial costs to the emergency response community.

Our intent was to require the removal from service of any aluminum cylinder or aluminum-lined composite exemption cylinder with reduced structural integrity resulting from the metal temperature of the aluminum cylinder or liner reaching a temperature above 350° F. Such cylinders may pose a safety risk. We did not intend to require the removal of undamaged cylinders from service. During typical firefighting operations, the metal temperature of an aluminum cylinder or liner does not reach temperatures above 350° F. We are revising the paragraph to require a cylinder to be condemned if over-heated. As defined in § 180.203 of this final rule, for an aluminum cylinder, ''over-heated'' means that the metal temperature of any part of the cylinder has reached a temperature in excess of 350° F.

Section 180.209

This section includes the requirements currently contained in § 173.34(e) for the periodic requalification of specification cylinders.

Paragraph (a) sets forth specific periodic requalification requirements for each specification cylinder. As discussed elsewhere in this preamble, we are not adopting the proposal to permit ultrasonic testing in place of a hydrostatic test. Ultrasonic testing will continue to be permitted under exemption.

Paragraph (b) establishes requalification requirements for DOT 3A and 3AA cylinders. We are revising the provision in paragraph (b)(1) to increase the requalification interval from five to 10 years for a DOT 3A and 3AA cylinder with a water capacity of 125 pounds or less that is used for certain named gases. A commenter stated numerous new refrigerants and blends are being marketed and requested we allow cylinders containing ''fluorinated hydrocarbons, liquefied hydrocarbons, and mixtures thereof which are commercially free from corroding components' to be requalified every 10 years rather than every 5 years. The commenter also pointed out that we authorized these materials under DOT Exemptions 10184 and 12084. Several other commenters requested we add certain other gases to the list. We agree the listing in paragraph (b)(1)(ii) should be updated. In this final rule, we are revising this paragraph to accommodate commenters concerns.

Paragraph (c) sets forth requalification requirements for DOT 4-series cylinders, and is adopted as proposed in the NPRM.

Paragraph (d) prescribes requalification requirements for cylinders 12 pounds or less with service pressures of 300 psig or less, and is adopted a proposed in the NPRM.

Paragraph (e) includes requirements for proof pressure testing for certain DOT–4 series cylinders, and is adopted as proposed in the NPRM.

Paragraph (f) sets forth requalification requirements for cylinders used to transport poisonous materials, and is adopted as proposed in the NPRM.

We are revising paragraph (g) to clarify the interval for performance of a visual inspection, in place of a five-year periodic retest, for cylinders used exclusively for the listed non-corrosive gases.

Paragraph (h) sets forth requalification requirements for cylinders used to transport anhydrous ammonia, and is adopted as proposed in the NPRM.

Paragraph (i) sets forth requalification requirements for DOT–8 series cylinders, currently in § 173.34(e)(18). The provision requires the replacement valve to be the same weight as the valve to be replaced. If it is not, the cylinder's marked tare weight must be adjusted to compensate for the valve weight differential. The Chlorine Institute and two valve manufacturers requested we revise paragraph (i)(3) to allow a tolerance on the replacement valve weight to compensate for variations. The valve manufacturers suggested the tolerance should be a stated weight or a percentage of the weight of the valve being replaced. They recommended no specific weight or percentage. In the absence of a specific recommendation, we are adopting the provision as stated in the NPRM.

Section 180.211

This section prescribes repair, rebuild, and heat treatment requirements currently prescribed in §§ 173.34(g) thru 173.34(l), with certain revisions. We received no comments on these provisions and are adopting them as proposed with editorial revisions for clarity. We are not adopting the proposed requirements for metric-marked cylinders.

Section 180.213

This section consolidates the marking requirements currently contained in § 173.34, with certain revisions. These marking requirements identify the type of inspection, test, or work performed on a cylinder. Locating the marking requirements in a single section of the HMR will facilitate their use by shippers, carriers, and enforcement personnel.

We had proposed to allow the application of requalification markings by stamping, engraving, scribing, or any other method approved in writing by the Associate Administrator. NSWA and another commenter objected to the permissive use of electric or manual scribes as an alternative method. They stated markings made by a scribe are of poor quality, particularly over multiple coats of paint, and should not be permitted. Also, NSWA stated that, unless specifically approved for flammable atmospheres, electrical apparatuses may create a safety hazard when used to mark cylinders containing flammable gases or in plants where flammable gases may be present. The proposal was fully accepted by other commenters. Because of concerns raised about the quality of certain marking methods and to alleviate unnecessary delays incurred by obtaining an approval from the Associate Administrator, we have revised this provision in this final rule. We will permit the use of any marking method capable of producing durable, legible marks. A cylinder with illegible requalification markings will be considered out-of-test and will have to be retested before being returned to service. Also, we are allowing the use of pressure sensitive labels to display the requalification markings on fire extinguishers, as proposed.

Section 180.215

This section contains the reporting and record retention requirements currently prescribed in § 173.34(e)(8), with certain revisions.

We revised the retester authorization record requirements in current § 173.34(e)(8)(i) to include all cylinder

requalifiers who inspect, test, repair, or rebuild cylinders. In addition, proposed paragraph (d)(1) requires records covering any work involving welding or brazing repairs, or the building or reheat treatment of cylinders to be retained by the cylinder requalifier for 15 years. The requalifier must retain inspection and test records until expiration of the inspection or requalification period or until the cylinder is again requalified, whichever occurs first. Records of any welding or brazing repair, rebuilding or reheat treatment must be retained for 15 years.

IV. Regulatory Analyses and Notices

A. Executive Order 12866 and DOT Regulatory Policies and Procedures

This final rule is not considered a significant regulatory action under section 3(f) of Executive Order 12866. It was reviewed informally by the Office of Management and Budget. The rule is not considered significant under the Regulatory Policies and Procedures of the Department of Transportation (44 FR 11034). A regulatory evaluation is available for review in the docket.

The compliance costs associated with this final rule are minimal. Most increased compliance costs involve the new requirement for a person who performs visual inspections of cylinders to obtain approval from the Associate Administrator and mark his RIN number on the cylinders he inspects. The aggregate cost to the industry of this new requirement is $29,520 per year. On a per facility basis, the cost is $20.50 per filing or $4.10 per year. Although they are difficult to quantity, the benefits associated with the provisions in this final rule are significant. This final rule will: (1) Enhance the accountability of the cylinder requalification process; (2) improve voluntary compliance with the cylinder requirements; (3) enhance enforcement related to cylinder requalifications; and (4) reduce the regulatory burden on the regulated industry while increasing its flexibility and providing an opportunity to use new technologies. Further, this final rule will improve cylinder transportation safety by reducing the number of unintentional releases of flammable and toxic material from DOT–3 series cylinders, prohibiting the use of an unsafe aluminum alloy for cylinder manufacture, and prohibiting the use of a cylinder after the expiration of its service life. Although we cannot assign definitive dollar amounts to these potential benefits, we believe that, taken together, the provisions of this final rule are the least costly alternatives available for ensuring an acceptable level of transportation safety. The potential benefits to society more than offset the potential costs associated with the final rule.

B. Regulatory Flexibility Act

The Regulatory Flexibility Act (5 U.S.C. 601 *et seq.*) requires an agency to review regulations to assess their impact on small entities unless the agency determines a rule is not expected to have a significant economic impact on a substantial number of small entities. This final rule imposes only minimal new costs of compliance on the regulated industry and, in fact, should reduce overall costs of compliance. Based on the assessment in the regulatory evaluation, I hereby certify that while this final rule applies to a substantial number of small entities, there will not be a significant economic impact on those small entities. A detailed Regulatory Flexibility analysis is available for review in the docket.

C. Executive Order 13132

This final rule has been analyzed in accordance with the principles and criteria contained in Executive Order 13132 (''Federalism''). This final rule preempts state, local, and Indian tribe requirements but does not propose any regulation with substantial direct effects on the states, the relationship between the national government and the states, or the distribution of power and responsibilities among the various levels of government. Therefore, the consultation and funding requirements of Executive Order 13132 do not apply.

Federal hazardous materials transportation law, 49 U.S.C. 5101–5127, contains an express preemption provision (49 U.S.C. 5125(b)) preempting state, local, and Indian tribe requirements on certain covered subjects. Covered subjects are:

(1) The designation, description, and classification of hazardous materials;

(2) The packing, repacking, handling, labeling, marking, and placarding of hazardous materials;

(3) The preparation, execution, and use of shipping documents related to hazardous materials and requirements related to the number, contents, and placement of those documents;

(4) The written notification, recording, and reporting of the unintentional release in transportation of hazardous material; or

(5) The design, manufacture, fabrication, marking, maintenance, recondition, repair, or testing of a packaging or container represented, marked, certified, or sold as qualified for use in transporting hazardous material.

This final rule addresses covered subject items 2 and 5 above and preempts state, local, and Indian tribe requirements not meeting the ''substantively the same'' standard. This final rule is necessary to assure an acceptable level of safety for the transportation of hazardous materials in cylinders.

Federal hazardous materials transportation law provides at section 5125(b)(2) that, if DOT issues a regulation concerning any of the covered subjects, DOT must determine and publish in the **Federal Register** the effective date of federal preemption. The effective date may not be earlier than the 90th day following the date of issuance of the final rule and not later than two years after the date of issuance. The effective date of federal preemption of this final rule is 90 days from publication of this final rule in the **Federal Register**.

D. Executive Order 13175

This final rule has been analyzed in accordance with the principles and criteria contained in Executive Order 13175 (''Consultation and Coordination with Indian Tribal Governments''). Because this final rule does not significantly or uniquely affect the communities of the Indian tribal governments and does not impose substantial direct compliance costs, the funding and consultation requirements of Executive Order 13175 do not apply.

E. Unfunded Mandates Reform Act of 1995

This final rule does not impose unfunded mandates under the Unfunded Mandates Reform Act of 1995. It does not result in costs of $100 million or more, in the aggregate, to any of the following: State, local, or Indian tribal governments, or the private sector. This rule is the least burdensome alternative to achieve the objective of the rule.

F. Paperwork Reduction Act

RSPA has current information collection approvals under OMB No. 2137–0022, Testing, Inspection, and Marking Requirements for Cylinders, with 168,431 burden hours and $10,882,516 annual costs, which expires October 31, 2004; and OMB No. 2137–0557, Approvals for Hazardous Materials, with 18,381 burden hours and $413,737.40 annual costs, which expires July 31, 2004. We believe that this rule may result in a minimal increase or decrease in annual burden hours and costs. These current approvals have been revised and submitted to OMB for extension and re-

approval. Under the Paperwork Reduction Act of 1995, no person is required to respond to an information collection unless it displays a valid OMB control number.

The information collection and recordkeeping requirements in current §§ 173.34, 173.302(c), and 178.35 (pertaining to records prepared by persons performing the requalification, repair, rebuild and use of cylinders) and requirements in current § 173.34 (pertaining to persons seeking approval to requalify cylinders) were approved by the Office of Management and Budget (OMB) and assigned OMB No. 2137–0022, with an expiration date of October 31, 2004. This information is used to verify that cylinders meet the required manufacturing standards prior to being authorized for initial use, and that, once manufactured, the cylinders are maintained and used in compliance with applicable requirements of the HMR. In this rule, these information collection and recordkeeping requirements for records used to verify that cylinders are being properly maintained for continuing hazardous material service are revised and redesignated in new §§ 180.205, 180.209, 180.211, 180.213, and 180.215, with no change in burden.

The information collection and recordkeeping requirements in current §§ 173.300a and 173.300b (pertaining to persons seeking approval to be an independent inspection agency and for chemical analyses and tests of DOT specification and exemption cylinders conducted outside the United States) were approved by OMB and assigned OMB No. 2137–0557, with an expiration date of July 31, 2004. The information is used to evaluate an applicants's qualification to perform the applicable requalification functions and to ensure that cylinders made outside the United States conform to the applicable HMR requirements. In this rule, the information collection and recordkeeping requirements are moved to new subpart I of part 107 and §§ 107.803, 107.805, 107.807, and 180.205(c). This final rule includes a new information collection and recordkeeping requirement for persons seeking approval to perform requalification functions that require marking a date on a cylinder. This new requirement is placed with the other hazardous materials approval requirements under OMB control number 2137–0557. This new approval is required every five years; therefore, first year and subsequent years' estimates are included in the burden estimates for OMB No. 2137–0557.

Because this final rule broadens the approval requirements for affected persons who requalify cylinders and relocates cylinder requalification requirements to other sections of the HMR, we revised the current burden hour submission and resubmitted the revised submission to OMB for extension and re-approval.

We estimate the total revised information collection and recordkeeping burden in this rule as follows:

OMB No. 2137–0022:

Number of Respondents: 139,352.

Total Annual Responses: 153,287.

Total Annual Burden Hours: 168,431.

Total Annual Burden Cost: $10,882,516.00.

OMB No. 2137–0557:

Number of Respondents: 10,718.

Total Annual Responses: 11,069.

Total Annual Burden Hours: 25,581 (1st year).

Total Annual Burden Cost: $561,337.40 (1st year).

Subsequent years 2–5 Burden Hours: 1,440 per year.

Subsequent years 2–5 Burden Cost: $29,520 per year.

Requests for a copy of the information collections should be directed to Deborah Boothe, Office of Hazardous Materials Standards (DHM–10), Research and Special Programs Administration, Room 8102, 400 Seventh Street, SW., Washington, DC 20590–0001, Telephone (202) 366–8553.

G. Regulation Identifier Number (RIN)

A regulation identifier number (RIN) is assigned to each regulatory action listed in the Unified Agenda of Federal Regulations. The Regulatory Information Service Center publishes the Unified Agenda in April and October of each year. The RIN contained in the heading of this document can be used to cross-reference this action with the Unified Agenda.

H. Environmental Assessment

This final rule incorporates new cylinder technologies through new and updated incorporations by reference of consensus standards developed by CGA; increases flexibility for cylinder manufacturers, requalifiers, and users; and facilitates compliance with the HMR by clarifying and reorganizing regulatory requirements applicable to cylinders. In addition, this final rule improves the overall safety performance of DOT specification cylinders by addressing several identified safety problems. To the extent that this final rule will reduce unintentional releases of hazardous materials from cylinders during transportation, it will reduce environmental damage associated with such releases. We find that there are no significant environmental impacts associated with this final rule.

List of Subjects

49 CFR Part 107

Administrative practice and procedure, Hazardous materials transportation, Packaging and containers, Penalties, Reporting and recordkeeping requirements.

49 CFR Part 171

Exports, Hazardous materials transportation, Hazardous waste, Imports, Incorporation by reference, Reporting and recordkeeping requirements.

49 CFR Part 172

Hazardous materials transportation, Hazardous waste, Labeling, Packaging and containers, Reporting and recordkeeping requirements.

49 CFR Part 173

Hazardous materials transportation, Incorporation by reference, Packaging and containers, Radioactive materials, Reporting and recordkeeping requirements, Uranium.

49 CFR Part 177

Hazardous materials transportation, Motor vehicle safety, Packaging and containers, Reporting and recordkeeping requirements.

49 CFR Part 178

Hazardous materials transportation, Incorporation by reference, Packaging and containers, Reporting and recordkeeping requirements.

49 CFR Part 179

Hazardous materials transportation, Incorporation by reference, Railroad safety, Reporting and recordkeeping requirements.

49 CFR Part 180

Hazardous materials transportation, Incorporation by reference, Motor vehicle safety, Packaging and containers, Reporting and recordkeeping requirements.

In consideration of the foregoing, title 49, Chapter I, Subchapters A and C of the Code of Federal Regulations, are amended as follows:

PART 107—HAZARDOUS MATERIALS PROGRAM PROCEDURES

1. The authority citation for part 107 continues to read as follows:

Authority: 49 U.S.C. 5101–5127, 44701; Sec. 212–213, Pub. L. 104–121, 110 Stat. 857; 49 CFR 1.45, 1.53.

§ 107.1 [Amended]

2. In § 107.1, the definition of ''Registration'' is amended by removing the wording ''registration with RSPA as a cylinder retester pursuant to 49 CFR 173.34(e)(1), or''.

3. Subpart I is added to part 107 to read as follows:

Subpart I—Approval of Independent Inspection Agencies, Cylinder Requalifiers, and Non-domestic Chemical Analyses and Tests of DOT Specification Cylinders

Sec.
107.801 Purpose and scope.
107.803 Approval of independent inspection agency.
107.805 Approval of cylinder requalifiers.
107.807 Approval of non-domestic chemical analyses and tests.

Subpart I—Approval of Independent Inspection Agencies, Cylinder Requalifiers, and Non-domestic Chemical Analyses and Tests of DOT Specification Cylinders

§ 107.801 Purpose and scope.

(a) This subpart prescribes procedures for—

(1) A person who seeks approval to be an independent inspection agency to perform cylinder inspections and verifications required by parts 178 and 180 of this chapter;

(2) A person who seeks approval to engage in the requalification (*e.g.,* inspection, testing, or certification), rebuilding, or repair of a cylinder manufactured in accordance with a DOT specification under subchapter C of this chapter or under the terms of an exemption issued under this part;

(3) A person who seeks approval to perform the manufacturing chemical analyses and tests of DOT specification or exemption cylinders outside the United States.

(b) No person may engage in a function identified in paragraph (a) of this section unless approved by the Associate Administrator in accordance with the provisions of this subpart. Each person must comply with the applicable requirements in this subpart. In addition, the procedural requirements in subpart H of this part apply to the filing, processing, and termination of an approval issued under this subpart.

§ 107.803 Approval of independent inspection agency.

(a) *General.* Prior to performing cylinder inspections and verifications required by parts 178 and 180 of this chapter, a person must apply to the Associate Administrator for an approval as an independent inspection agency. A person approved as an independent inspection agency is not an RSPA agent or representative.

(b) *Criteria.* No applicant for approval as an independent inspection agency may be engaged in the manufacture of cylinders for use in the transportation of hazardous materials, or be directly or indirectly controlled by, or have a financial involvement with, any entity that manufactures cylinders for use in the transportation of hazardous materials, except for providing services as an independent inspector.

(c) *Application information.* Each applicant must submit an application in conformance with § 107.705 containing the information prescribed in § 107.705(a). In addition, the application must contain the following information:

(1) Name and address of each facility where tests and inspections are to be performed.

(2) Detailed description of the inspection and testing facilities to be used by the applicant.

(3) Detailed description of the applicant's qualifications and ability to perform the inspections and to verify the inspections required by part 178 of this chapter or under the terms of an exemption issued under this part.

(4) Name, address, and principal business activity of each person having any direct or indirect ownership interest in the applicant greater than three percent and any direct or indirect ownership interest in each subsidiary or division of the applicant.

(5) Name of each individual whom the applicant proposes to employ as an inspector and who will be responsible for certifying inspection and test results, and a statement of that person's qualifications.

(6) An identification or qualification number assigned to each inspector who is supervised by a certifying inspector identified in paragraph (c)(3) of this section.

(7) A statement that the applicant will perform its functions independent of the manufacturers and owners of the cylinders.

(8) The signature of the person certifying the approval application and the date on which it was signed.

(d) *Facility inspection.* Upon the request of the Associate Administrator, the applicant must allow the Associate Administrator or the Associate Administrator's designee to inspect the applicant's facilities and records. The person seeking approval must bear the cost of the inspection.

§ 107.805 Approval of cylinder requalifiers.

(a) *General.* A person must meet the requirements of this section to be approved to inspect, test, certify, repair, or rebuild a cylinder in accordance with a DOT specification under subpart C of part 178 or subpart C of part 180 of this chapter or under the terms of an exemption issued under this part.

(b) *Independent Inspection Agency Review.* Each applicant must arrange for an independent inspection agency, approved by the Associate Administrator pursuant to this subpart, to perform a review of its inspection or requalification operation. The person seeking approval must bear the cost of the inspection. A list of approved independent inspection agencies is available from the Associate Administrator at the address listed in § 107.705. Assistance in obtaining an approval is available from the same address.

(c) *Application for approval.* If the inspection performed by an independent inspection agency is completed with satisfactory results, the applicant must submit a letter of recommendation from the independent inspection agency, an inspection report, and an application containing the information prescribed in § 107.705(a). In addition, the application must contain—

(1) The name of the facility manager;

(2) The DOT specification/exemption cylinders that will be inspected, tested, repaired, or rebuilt at the facility;

(3) A certification that the facility will operate in compliance with the applicable requirements of subchapter C of this chapter; and

(4) The signature of the person making the certification and the date on which it was signed.

(d) *Issuance of requalifier identification number (RIN).* The Associate Administrator issues a RIN as evidence of approval to requalify DOT specification/exemption cylinders if it is determined, based on the applicant's submission and other available information, that the applicant's qualifications and, when applicable, facility are adequate to perform the requested functions in accordance with the criteria prescribed in subpart C of Part 180 of this chapter.

(e) *Expiration of RIN.* Unless otherwise provided in the issuance letter, an approval expires five years from the date of issuance, provided the applicant's facility and qualifications are maintained at or above the level observed at the time of inspection by the independent inspection agency, or at the date of the certification in the application for approval for requalifiers only performing inspections made under § 180.209(g) of this chapter.

(f) *Exceptions.* Notwithstanding the requirements in paragraphs (b) and (c) of this section, a person who only performs inspections in accordance

with § 180.209(g) of this chapter may submit an application that, in addition to the information prescribed in § 107.705(a), identifies the DOT specification/exemption cylinders to be inspected; certifies the requalifier will operate in compliance with the applicable requirements of subchapter C of this chapter; certifies the persons performing inspections have been trained and have the information contained in each applicable CGA pamphlet incorporated by reference in § 171.7 of this chapter applicable to the requalifiers' activities; and includes the signature of the person making the certification and the date on which it was signed. Each person must comply with the applicable requirements in this subpart. In addition, the procedural requirements in subpart H of this part apply to the filing, processing and termination of an approval issued under this subpart. After September 30, 2003, no person may requalify a DOT specification/exemption cylinder in accordance with § 180.209(g) of this chapter unless that person has been issued a RIN as provided in paragraph (d) of this section.

§ 107.807 Approval of non-domestic chemical analyses and tests.

(a) *General.* A person who seeks to manufacture DOT specification or exemption cylinders outside the United States must seek an approval from the Associate Administrator to perform the chemical analyses and tests of those cylinders outside the United States.

(b) *Application for approval.* Each applicant must submit an application containing the information prescribed in § 107.705(a). In addition, the application must contain—

(1) The name, address, and a description of each facility at which cylinders are to be manufactured and chemical analyses and tests are to be performed;

(2) Complete details concerning the dimensions, materials of construction, wall thickness, water capacity, shape, type of joints, location and size of openings and other pertinent physical characteristics of each specification or exemption cylinder for which approval is being requested, including calculations for cylinder wall stress and wall thickness, which may be shown on a drawing or on separate sheets attached to a descriptive drawing;

(3) The name of the independent inspection agency to be used; and

(4) The signature of the person making the certification and the date on which it was signed.

(c) *Facility inspections.* Upon the request of the Associate Administrator, the applicant must allow the Associate Administrator or the Associate Administrator's designee to inspect the applicant's cylinder manufacturing and testing facilities and records, and must provide such materials and cylinders for analyses and tests as the Associate Administrator may specify. The applicant or holder must bear the cost of the initial and subsequent inspections, analyses, and tests.

PART 171—GENERAL INFORMATION, REGULATIONS, AND DEFINITIONS

4. The authority citation for part 171 continues to read as follows:

Authority: 49 U.S.C. 5101–5127; 49 CFR 1.53.

5. In § 171.2, paragraph (d)(3) is revised to read as follows:

§ 171.2 General requirements.

* * * * *

(d) * * *

(3) Test dates associated with specification, registration, approval, retest, exemption, or requalification identification number (RIN) markings indicating compliance with a test or retest requirement of this subchapter, or an exemption, an approval, or a registration issued under this subchapter or subchapter A of this chapter.

* * * * *

6. In § 171.6, the table in paragraph (b)(2) is amended by revising the entries for 2137–0022 and 2137–0057, to read as follows:

§ 171.6 Control numbers under the Paperwork Reduction Act.

* * * * *

(b) * * *

(2) Table.

Current OMB Control No.	Title	Title 49 CFR part or section where identified or described
* *	* *	* * *
2137–0022	Testing, Inspection, and Marking Requirements for Cylinders.	Secs. 173.302a, 173.303, 173.304, 173.309, 178.2, 178.3, 178.35, 178.44, 178.45, 178.46, 178.57, 178.59, 178.60, 178.61, 178.68, 180.205, 180.209, 180.211, 180.213, 180.215.
* *	* *	* * *
2137–0557	Approvals for Hazardous Materials	Secs. 107.402; 107.403; 107.405; 107.503; 107.705; 107.713; 107.715; 107.717; 107.803; 107.805; 107.807; 110.30; 172.101; 172.102, Special Provisions 26, 19, 53, 55, 60, 105, 118, 121, 125, 129, 131, 133, 136; 172.102, Special Provisions B45, B55, B61, B69, B77, B81, N10, N72, Code: T42; 173.2a; 173.4; 173.7; 173.21; 173.22; 173.24; 173.38; 173.31; 173.51; 173.56; 173.58; 173.59; 173.124; 173.128; 173.159; 173.166; 173.171; 173.214; 173.222; 173.224; 173.225; 173.245; 173.301; 173.305; 173.306; 173.314; 173.315; 173.316; 173.318; 173.334; 173.340; 173.411; 173.433; 173.457; 173.471; 173.472; 173.473; 173.476; 174.50; 174.63; 175.10; 175.701; 176.168; 176.340; 176.704; 178.3; 178.35; 178.47; 178.53; 178.58; 178.270–3; 178.270–13; 178.273; 178.274; 178.503; 178.509; 178.605; 178.606; 178.608; 178.801; 178.813; 180.213.
* *	* *	* * *

7. In § 171.7, in the table in paragraph (a)(3), the following changes are made:

a. In the entry ASTM A 240/A 240M–94b, the wording ''A 240M–94b'' is revised to read ''A 240M–99b''.

b. The entry ASTM A 388–67 is removed.

c. In the entry ASTM E 8–89, the wording ''E 8–89 Tension Testing of

Metallic Materials'' is revised to read ''E 8–99 Standard Test Methods for Tension Testing of Metallic Materials''.

d. In the entry ASTM E 23–60, in column 1, the wording ''E 23–60 Notched Bar Impact Testing of Metallic Materials'' is revised to read ''E 23–98 Standard Test Methods for Notched Bar Impact Testing of Metallic Materials'' and in column 2, the reference ''; 179.400'' is removed.

e. In the entry CGA Pamphlet C–3, in column 1, the wording ''Standards for Welding and Brazing on Thinned Walled Containers, 1975'' is revised to read ''Standards for Welding on Thin-Walled Steel Cylinders, 1994'' and in column 2, the reference ''; 180.211'' is added, in numerical order.

f. In the entry CGA Pamphlet C–5, in column 2, the reference ''173.302'' is removed and the reference ''173.302a'' is added in its place.

g. In the entry CGA Pamphlet C–6, in column 2, the reference ''173.34;'' is removed and the references ''173.198; 180.205; 180.209; 180.211;'' are added, in numerical order.

h. In the entry CGA Pamphlet C–6.1, in column 2, the reference ''173.34'' is removed and the references ''180.205; 180.209'' are added, in its place.

i. In the entry CGA Pamphlet C–6.2, in column 2, the reference ''173.34'' is removed and the reference ''180.205'' is added, in its place.

j. In the entry CGA Pamphlet C–6.3, in column 2, the reference ''173.34'' is removed and the references ''180.205; 180.209'' are added, in its place.

k. In the entry CGA Pamphlet C–8, in column 2, the reference ''173.34'' is removed and the reference ''180.205'' is added, in its place.

l. In the entry CGA Pamphlet C–12, in column 2, the reference ''173.34;'' is removed and the reference ''173.301;'' is added, in numerical order.

m. In the entry CGA Pamphlet C–13, in column 2, the reference ''173.34;'' is removed and the references ''; 180.205; 180.209.'' are added, in numerical order.

n. In the entry CGA Pamphlet C–14, in column 2, the reference ''173.34'' is removed and the reference ''173.301'' is added, in its place.

o. In the entry CGA Pamphlet S–1.1, in column 2, the reference ''173.34'' is removed and the reference ''173.301; 173.304a.'' is added, in its place.

p. Under General Services Administration, in the entry Federal Specification RR–C–901C, in column 2, the reference ''173.304;'' is removed and the reference ''; 173.337'' is added, in numerical order.

q. Two new entries are added in alphanumeric sequence under American Society for Testing and Materials, the address for Compressed Gas Association, Inc., is revised, and two new entries are added in alphanumeric sequence under Compressed Gas Association, to read as follows:

§ 171.7 Reference material.

(a) * * *

(3) *Table of material incorporated by reference.* * * *

Source and name of material	49 CFR reference
* * * * * * *	
American Society for Testing and Materials * * *	
* * * * * * *	
ASTM D 1835–97, Standard Specification for Liquefied Petroleum (LP) Gases	180.209
* * * * * * *	
ASTM E 213–98, Standard Practice for Ultrasonic Examination of Metal Pipe and Tubing	178.45
* * * * * * *	
Compressed Gas Association, Inc., 4221 Walney Road, 5th Floor, Chantilly, Virginia 20151	
* * * * * * *	
CGA Pamphlet P–20, Standard for the Classification of Toxic Gas Mixtures, 1995	173.115
* * * * * * *	
CGA Pamphlet S–7, Method for Selecting Pressure Relief Devices for Compressed Gas Mixtures in Cylinders, 1996	173.301
* * * * * * *	

* * * * *

§ 171.8 [Amended]

8. In § 171.8, in the definition of ''Filling density'', paragraph (1) is amended by revising the reference ''§ 173.304(a)(2) table note 1'' to read ''§ 173.304a(a)(2) table note 1''.

9. In § 171.12, paragraph (b)(15) is revised to read as follows:

§ 171.12 Import and export shipments.

* * * * *

(b) * * *

(15) Cylinders not manufactured to a DOT specification must conform to the requirements of § 173.301(j) through (l) of this subchapter or, for Canadian manufactured cylinders, to the requirements of § 171.12a(b)(13).

* * * * *

PART 172—HAZARDOUS MATERIALS TABLE, SPECIAL PROVISIONS, HAZARDOUS MATERIALS COMMUNICATIONS, EMERGENCY RESPONSE INFORMATION, AND TRAINING REQUIREMENTS

10. The authority citation for part 172 continues to read as follows:

Authority: 49 U.S.C. 5101–5127; 49 CFR 1.53.

11. In § 172.101, the Hazardous Materials Table is amended by revising the entries Cyanogen, Germane, and Iron pentacarbonyl, to read as follows:

§ 172.101 Purpose and use of hazardous materials table.

* * * * *

§ 172.101.—HAZARDOUS MATERIALS TABLE

Symbols	Hazardous materials descriptions and proper shipping names	Hazard class or division	Identification numbers	PG	Label codes	Special provisions (§ 172.102)	(8) Packaging (§ 173.***)			(9) Quanity limitations		(10) Vessel stowage	
							Exceptions	Nonbulk	Bulk	Passenger aircraft/rail	Cargo aircraft only	Location	Other
(1)	(2)	(3)	(4)	(5)	(6)	(7)	(8A)	(8B)	(8C)	(9A)	(9B)	(10A)	(10B)
	*		*		*	*		*		*	*		
	Cyanogen	2.3	UN1026 ..		2.3, 2.1 ..	2	None	304	245	Forbidden	Forbidden	D	40
	*		*		*	*		*		*	*		
	Germane	2.3	UN2192 ..		2.3, 2.1 ..	2	None	302	245	Forbidden	Forbidden	D	40
	Iron penta carbonyl.	6.1	UN1994 ..	I	6.1, 3	1,B9, B14, B30, B72, B77, T22, TP2, TP13, TP38, TP44.	None	226	244	Forbidden	Forbidden	D	40

PART 173—SHIPPERS—GENERAL REQUIREMENTS FOR SHIPMENTS AND PACKAGINGS

12. The authority citation for part 173 continues to read as follows:

Authority: 49 U.S.C. 5101–5127, 44701; 49 CFR 1.45, 1.53.

§ 173.34 [Removed]

13. Section 173.34 is removed.

14. Section 173.40 is revised to read as follows:

§ 173.40 General packaging requirements for toxic materials packaged in cylinders.

When this section is referenced for a Hazard Zone A or B hazardous material elsewhere in this subchapter, the requirements in this section are applicable to cylinders used for that material.

(a) *Authorized cylinders.* (1) A cylinder must conform to one of the specifications for cylinders in subpart C of part 178 of this subchapter, except that specification 8, 8AL, and 39 cylinders are not authorized.

(2) After September 30, 2002, DOT 3AL cylinders made of aluminum alloy 6351–T6 may not be filled and offered for transportation or transported with a Division 2.3 Hazard Zone A material, a Division 6.1 Hazard Zone A material, or any liquid meeting the definition of Division 6.1 and the criteria for Packing Group I Hazard Zone A, as specified in § 173.133. If it is otherwise serviceable and conforms to the regulations in effect on September 30, 2002, a DOT 3AL cylinder made of aluminum alloy 6351–T6 and filled before October 1, 2002, may be transported for reprocessing or disposal of the cylinder's contents until April 1, 2003.

(b) *Outage and pressure requirements.* The pressure of the hazardous material at 55° C(131° F) may not exceed the service pressure of the cylinder. Sufficient outage must be provided so that the cylinder will not be liquid full at 55° C(131° F).

(c) *Closures.* Each cylinder containing a Hazard Zone A material must be closed with a plug or valve conforming to the following:

(1) Each plug or valve must have a taper-threaded connection directly to the cylinder and be capable of withstanding the test pressure of the cylinder without damage or leakage.

(2) Each valve must be of the packless type with non-perforated diaphragm, except that, for corrosive materials, a valve may be of the packed type with an assembly made gas-tight by means of a seal cap with gasketed joint attached to the valve body or the cylinder to prevent loss of material through or past the packing.

(3) Each valve outlet must be sealed by a threaded cap or threaded solid plug and inert gasketing material.

(4) The materials of construction for the cylinder, valves, plugs, outlet caps, luting, and gaskets must be compatible with each other and with the lading.

(d) *Additional handling protection.* Each cylinder or cylinder overpack combination offered for transportation containing a Division 2.3 or 6.1 Hazard Zone A or B material must conform to the valve damage protection performance requirements of this section. In addition to the requirements of this section, overpacks must conform to the overpack provisions of § 173.25.

(1) Each cylinder with a wall thickness at any point of less than 2.03 mm (0.08 inch) and each cylinder that does not have fitted valve protection must be overpacked in a box. The box must conform to overpack provisions in § 173.25. Box and valve protection must be of sufficient strength to protect all parts of the cylinder and valve, if any, from deformation and breakage resulting from a drop of 2.0 m (7 ft) or more onto a non-yielding surface, such as concrete or steel, impacting at an orientation most likely to cause damage. ''Deformation'' means a cylinder or valve that is bent, distorted, mangled, misshapen, twisted, warped, or in a similar condition.

(2) Each cylinder with a valve must be equipped with a protective metal cap, other valve protection device, or an overpack sufficient to protect the valve from deformation, breakage or leakage resulting from a drop of 2.0 m (7 ft) onto a non-yielding surface, such as concrete or steel. Impact must be at an orientation most likely to cause damage.

(e) *Interconnection.* Cylinders may not be manifolded or interconnected.

15. In § 173.115, the last sentence in paragraph (c)(2) and paragraph (j) are revised to read as follows:

§ 173.115 Class 2, Divisions 2.1, 2.2, and 2.3—Definitions.

* * * * *

(c) * * *

(2) * * * LC50 values for mixtures may be determined using the formula in § 173.133(b)(1)(i) or CGA Pamphlet P–20 (incorporated by reference; *see* § 171.7 of this subchapter).

* * * * *

(j) *Refrigerant gas or Dispersant gas.* The terms *Refrigerant gas* and *Dispersant gas* apply to all nonpoisonous refrigerant gases; dispersant gases (fluorocarbons) listed in § 172.101 of this subchapter and §§ 173.304, 173.314(c), 173.315(a)(1), and 173.315(h) and mixtures thereof; and any other compressed gas having a vapor pressure not exceeding 260 psia at 54° C(130° F), used only as a refrigerant, dispersant, or blowing agent.

16. Section 173.163 is revised to read as follows:

§ 173.163 Hydrogen fluoride.

Hydrogen fluoride (hydrofluoric acid, anhydrous) must be packaged in a specification 3, 3A, 3AA, 3B, 3BN, 3E, or 4A cylinder; or a specification 4B, 4BA, or 4BW cylinder, if the cylinder is not brazed. Filling density may not exceed 85 percent of the cylinder's water weight capacity. In place of the periodic hydrostatic retest, cylinders used in exclusive service may be given a complete external visual inspection in conformance with part 180, subpart C, of this subchapter, at the time such retest becomes due. Cylinders removed from hydrogen fluoride service must be condemned in accordance with § 180.205 of this subchapter or, at the direction of the owner, rendered incapable of holding pressure.

17. Section 173.192 is revised to read as follows:

§ 173.192 Packaging for certain toxic gases in Hazard Zone A.

When § 172.101 of this subchapter specifies a toxic material must be packaged under this section, only specification cylinders are authorized, as follows:

(a) Specification 3A1800, 3AA1800, 3AL1800, or 3E1800 cylinders, under the following conditions:

(1) Specification 3A, 3AA, or 3AL cylinders may not exceed 57 kg (125 lb) water capacity (nominal).

(2) Specification 3AL cylinders may only be offered for transportation or transported by highway and rail.

(b) Packagings must conform to the requirements of § 173.40.

(c) For cylinders used for phosgene:

(1) The filling density may not exceed 125 percent;

(2) A cylinder may not contain more than 68 kg (150 lb) of phosgene; and

(3) Each cylinder containing phosgene must be tested for leakage before it is offered for transportation or transported and must show no leakage. The leakage test must consist of immersing the cylinder and valve, without the protective cap attached, in a bath of water at a temperature of approximately 66° C (150° F) for at least 30 minutes, during which time frequent examinations must be made to note any escape of gas. The valve of the cylinder may not be loosened after this test. Suitable safeguards must be provided to protect personnel and facilities should failure occur during the test. As an alternative, each cylinder containing phosgene may be tested for leakage by a method approved in writing by the Associate Administrator.

18. In § 173.198, the last two sentences in paragraph (a) are revised to read as follows:

§ 173.198 Nickel carbonyl.

(a) * * * A cylinder used exclusively for nickel carbonyl may be given a complete external visual inspection instead of the pressure test required by § 180.205 of this subchapter. Visual inspection must be in accordance with CGA Pamphlet C–6 (incorporated by reference; see § 171.7 of this subchapter).

* * * * *

19. In § 173.226, paragraph (a) is revised to read as follows:

§ 173.226 Materials poisonous by inhalation, Division 6.1, Packing Group I, Hazard Zone A.

* * * * *

(a) In seamless specification cylinders conforming to the requirements of § 173.40.

* * * * *

20. In § 173.227, the section heading and paragraph (a) are revised to read as follows:

§ 173.227 Materials poisonous by inhalation, Division 6.1, Packing Group I, Hazard Zone B.

* * * * *

(a) In packagings as authorized in § 173.226 and seamless and welded specification cylinders conforming to the requirements of § 173.40.

* * * * *

21. Section 173.228 is revised to read as follows:

§ 173.228 Bromine pentafluoride or bromine trifluoride.

The following packagings are authorized for bromine pentafluoride and bromine trifluoride:

(a) Specification 3A150, 3AA150, 3B240, 3BN150, 4B240, 4BA240, 4BW240 and 3E1800 cylinders. No cylinder may be equipped with a pressure relief device.

(b) A material in Hazard Zone A must be transported in a seamless specification cylinder conforming to the requirements of § 173.40. No cylinder may be equipped with a pressure relief device.

§§ 173.300a, 173.300b, 173.300c [Removed]

22. In part 173, §§ 173.300a, 173.300b, and 173.300c are removed.

23. Section 173.301 is revised to read as follows:

§ 173.301 General requirements for shipment of compressed gases in cylinders and spherical pressure vessels.

(a) *General qualifications for use of cylinders.* As used in this subpart, *filled* or *charged* means an introduction or presence of a hazardous material in a cylinder. A Class 2 material (gas) offered for transportation in a cylinder must be prepared in accordance with this section and §§ 173.302 through 173.305, as applicable.

(1) Compressed gases must be in metal cylinders and containers built in accordance with the DOT and ICC specifications, as shown in this paragraph (a)(1), in effect at the time of manufacture, and requalified and marked as required by the specification and the regulation for requalification, if applicable:

Packagings

2P
2Q
ICC–3[1]*COM019*
3A
3AA
3AL
3AX
3A480X
3AAX
3B
3BN
3E
3HT
3T
4AA480
4B
4B240ET
4BA
4BW
4D
4DA
4DS
4E
4L
8
8AL
39

(2) A cylinder must be filled in accordance with this part. Before each filling of a cylinder, the person filling the cylinder must visually inspect the outside of the cylinder. A cylinder that has a crack or leak, is bulged, has a defective valve or a leaking or defective pressure relief device, or bears evidence of physical abuse, fire or heat damage, or detrimental rusting or corrosion, may not be filled and offered for transportation. A cylinder may be repaired and requalified only as prescribed in subpart C of part 180 of this subchapter.

(3) Pressure relief devices must be tested for leaks before the charged cylinder is shipped from the cylinder filling plant. It is expressly forbidden to repair a leaking fuse plug device, where the leak is through the fusible metal or between the fusible metal and the opening in the plug body, except by

[1] Use of existing cylinders is authorized. New construction is not authorized.

removal of the device and replacement of the fusible metal.

(4) A cylinder that previously contained a Class 8 material must be requalified in accordance with § 180.205(e) of this subchapter.

(5) When a cylinder with a marked pressure limit is prescribed, another cylinder made under the same specification but with a higher marked pressure limit is authorized. For example, a cylinder marked ''DOT–4B500'' may be used when ''DOT–4B300'' is specified.

(6) No person may fill a cylinder overdue for periodic requalification with a hazardous material and then offer it for transportation. The prohibition against offering a cylinder for transportation that is overdue for periodic requalification does not apply to a cylinder filled prior to the requalification due date.

(7) A cylinder with an authorized service life may not be offered for transportation in commerce after its authorized service life has expired. However, a cylinder in transportation or a cylinder filled prior to the expiration of its authorized service life may be transported for reprocessing or disposal of the cylinder's contents. After emptying, the cylinder must be condemned in accordance with § 180.205 of this subchapter.

(8) The pressure of the hazardous material at 55° C (131° F) may not exceed 5/4 of the service pressure of the cylinder. Sufficient outage must be provided so the cylinder will not be liquid full at 55° C (131° F).

(9) Specification 2P, 2Q, 3E, 3HT, spherical 4BA, 4D, 4DA, 4DS, and 39 cylinders must be shipped in strong outer packagings. The strong outer packaging must conform to paragraph (h) of this section and to § 173.25.

(b) *Cylinder markings.* Required markings on a cylinder must be legible and must meet the applicable requirements of subpart C of part 180 of this subchapter. Additional information may be marked on the cylinder provided it does not affect the required markings prescribed in the applicable cylinder specification.

(c) *Toxic gases and mixtures.* Cylinders containing toxic gases and toxic gas mixtures meeting the criteria of Division 2.3 Hazard Zone A or B must conform to the requirements of § 173.40 and CGA Pamphlets S–1.1 and S–7 (incorporated by reference; see § 171.7 of this subchapter). A DOT 39 cylinder may not be used for toxic gases or toxic gas mixtures meeting the criteria for Division 2.3, Hazard Zone A or B.

(d) *Gases capable of combining chemically.* A filled cylinder may not contain any gas or material capable of combining chemically with the cylinder's contents or with the cylinder's material of construction, so as to endanger the cylinder's serviceability. After September 30, 2002, DOT 3AL cylinders made of aluminum alloy 6351–T6 may not be filled and offered for transportation with pyrophoric gases; however, if it is otherwise serviceable and conforms to the regulations in effect on September 30, 2002, a DOT 3AL cylinder made of aluminum alloy 6351–T6 and filled before October 1, 2002, may be transported for reprocessing or disposal of the cylinder's contents until April 1, 2003.

(e) *Ownership of cylinder.* A cylinder filled with a hazardous material may not be offered for transportation unless it was filled by the owner of the cylinder or with the owner's consent.

(f) *Pressure relief device systems.* (1) Except as provided in paragraphs (f)(5) and (f)(6) of this section, a cylinder filled with a gas and offered for transportation must be equipped with one or more pressure relief devices sized and selected as to type, location, and quantity, and tested in accordance with CGA Pamphlets S–1.1 (incorporated by reference; *see* § 171.7 of this subchapter; compliance with paragraph 9.1.1.1 of CGA Pamphlet S–1.1 is not required) and S–7 (incorporated by reference; *see* § 171.7 of this subchapter). The pressure relief device must be capable of preventing rupture of the normally filled cylinder when subjected to a fire test conducted in accordance with CGA Pamphlet C–14 (incorporated by reference; see § 171.7 of this subchapter), or, in the case of an acetylene cylinder, CGA Pamphlet C–12 (incorporated by reference; *see* § 171.7 of this subchapter).

(2) When a pressure relief device is installed, the inlet port to the relief channel must be in the vapor space of the cylinder.

(3) For a DOT 3, 3A, 3AA, 3AL, 3AX, 3AXX, 3B or 3BN cylinder, from the first requalification due on and after October 1, 2002, the set pressure of the pressure relief device must be at test pressure with a tolerance of plus zero to minus 10%.

(4) A pressure relief device is required on a DOT 39 cylinder regardless of cylinder size or filled pressure. A DOT 39 cylinder used for liquefied Division 2.1 materials must be equipped with a metal pressure relief device. Fusible pressure relief devices are not authorized on a DOT 39 cylinder containing a liquefied gas.

(5) A pressure relief device is not required on—

(i) A cylinder 305 mm (12 inches) or less in length, exclusive of neck, and 114 mm (4.5 inches) or less in outside diameter, except when the cylinder is filled with a liquefied gas for which this part requires a service pressure of 1800 psig or higher or a nonliquefied gas to a pressure of 1800 psig or higher at 21° C (70° F);

(ii) A cylinder with a water capacity of less than 454 kg (1000 lbs) filled with a nonliquefied gas to a pressure of 300 psig or less at 21°C (70°F), except for a DOT 39 cylinder or a cylinder used for acetylene in solution; or

(iii) A cylinder containing a Class 3 or a Class 8 material without pressurization, unless otherwise specified for the hazardous material.

(6) A pressure relief device is prohibited on a cylinder filled with a Division 2.3 or 6.1 material in Hazard Zone A.

(g) *Manifolding cylinders in transportation.* (1) Cylinder manifolding is authorized only under conditions prescribed in this paragraph (g). Manifolded cylinders must be supported and held together as a unit by structurally adequate means. Except for Division 2.2 materials, each cylinder must be equipped with an individual shutoff valve that must be tightly closed while in transit. Manifold branch lines must be sufficiently flexible to prevent damage to the valves that otherwise might result from the use of rigid branch lines. Each cylinder must be individually equipped with a pressure relief device as required in paragraph (f) of this section. Pressure relief devices on manifolded horizontal cylinders filled with a compressed gas must be arranged to discharge unobstructed to the open air in such a manner as to prevent any escaping gas from contacting personnel or any adjacent cylinders. Pressure relief devices on manifolded horizontal cylinders filled with a flammable compressed gas must be arranged to discharge upward to prevent any escaping gas from contacting any adjacent cylinders. Valves and pressure relief devices on manifolded cylinders filled with a compressed gas must be protected from damage by framing, a cabinet, or other method. Manifolding is authorized for cylinders containing the following gases:

(i) Nonliquefied (permanent) compressed gases authorized by § 173.302.

(ii) Liquefied compressed gases authorized by § 173.304. Each manifolded cylinder containing a liquefied compressed gas must be separately filled and means must be provided to ensure no interchange of

cylinder contents can occur during transportation.

(iii) Acetylene as authorized by § 173.303.

(2) For the checking of tare weights or replacing solvent, the cylinder must be removed from the manifold. This requirement is not intended to prohibit filling acetylene cylinders while manifolded.

(h) *Cylinder valve protection.* (1) A cylinder used to transport a hazardous material must meet the requirements specified in this paragraph (h). The following cylinders are not subject to the cylinder valve protection requirements in this paragraph (h):

(i) A cylinder containing only a Division 2.2 material without a Division 5.1 subsidiary hazard;

(ii) A cylinder containing a Class 8 liquid corrosive only to metal;

(iii) A cylinder with a water capacity of 4.8 liters (293 in ^{3}) or less containing oxygen, compressed;

(iv) A cylinder containing oxygen, refrigerated liquid (cryogenic liquid);

(v) A Medical E cylinder with a water capacity of 4.9 liters (300 in ^{3}) or less;

(vi) A fire extinguisher; or

(vii) A cylinder containing acetylene.

(2) For cylinders manufactured before October 1, 2007, a cylinder must have its valves protected by one of the following methods:

(i) By equipping the cylinder with securely attached metal caps of sufficient strength to protect valves from damage during transportation;

(ii) By boxing or crating the cylinders so as to protect valves from damage during transportation; or

(iii) By constructing the cylinder so that the valve is recessed into the cylinder or otherwise protected to the extent that it will not be subjected to a blow when the container is dropped onto a flat surface.

(3) For cylinders manufactured after October 1, 2007, each cylinder valve assembly must be of sufficient strength or protected such that no leakage occurs when a cylinder with the valve installed is dropped 1.8 m (6 ft.) or more onto a non-yielding surface, such as concrete or steel, impacting the valve assembly or protection device at an orientation most likely to cause damage. The cylinder valve assembly protection may be provided by any method meeting the performance requirement in this paragraph (h)(3). Examples include:

(i) Equipping the cylinder with a securely attached metal cap.

(ii) Packaging the cylinder in a box, crate, or other strong outside packaging conforming to the requirements of § 173.25.

(iii) Constructing the cylinder such that the valve is recessed into the cylinder or otherwise protected.

(i) *Cylinders mounted on motor vehicles or in frames.* Seamless DOT specification cylinders longer than 2 m (6.5 feet) are authorized for transportation only when horizontally mounted on a motor vehicle or in an ISO framework or other framework of equivalent structural integrity. Cylinders may not be transported by rail in container on freight car (COFC) or trailer on flat car (TOFC) service except under conditions approved by the Associate Administrator for Safety, Federal Railroad Administration. The cylinder must be configured as follows:

(1) Each cylinder must be fixed at one end of the vehicle or framework with provision for thermal expansion at the opposite end attachment;

(2) The valve and pressure relief device protective structure must be sufficiently strong to withstand a force equal to twice the weight of the cylinder and framework assembly with a safety factor of four, based on the ultimate strength of the material used; and

(3) Discharge from a pressure relief device must be arranged in such a manner as to prevent any escaping gas from contacting personnel or any adjacent cylinders.

(j) *Non-specification cylinders in domestic use.* Except as provided in paragraphs (k) and (l) of this section, a filled non-DOT specification cylinder, other than a DOT exemption cylinder or a cylinder used as a fire extinguisher in conformance with § 173.309, may not be offered for transportation or transported to, from, or within the United States.

(k) *Importation of foreign cylinders for discharge within a single port area.* A cylinder manufactured to other than a DOT specification and certified as being in conformance with the transportation regulations of another country may be authorized, upon written request to and approval by the Associate Administrator, for transportation within a single port area, provided—

(1) The cylinder is transported in a closed freight container;

(2) The cylinder is certified by the importer to provide a level of safety at least equivalent to that required by the regulations in this subchapter for a comparable DOT specification cylinder; and

(3) The cylinder is not refilled for export unless in compliance with paragraph (l) of this section.

(l) *Filling of foreign cylinders for export.* A cylinder not manufactured, inspected, tested and marked in accordance with part 178 of this subchapter, or a cylinder manufactured to other than a DOT specification or exemption, may be filled with a gas in the United States and offered for transportation and transported for export, if the following conditions are met:

(1) The cylinder has been requalified and marked with the month and year of requalification in accordance with subpart C of part 180 of this subchapter, or has been requalified as authorized by the Associate Administrator.

(2) The maximum filling density and service pressure for each cylinder conform to the requirements of this part for the gas involved.

(3) The bill of lading or other shipping paper identifies the cylinder and includes the following certification: ''This cylinder has (These cylinders have) been qualified, as required, and filled in accordance with the DOT requirements for export.''.

(m) *Metal attachments.* Metal attachments to cylinders must have rounded or chamfered corners, or be otherwise protected, so as to prevent the likelihood of causing puncture or damage to other hazardous materials packages. This requirement applies to anything temporarily or permanently attached to the cylinder, such as metal skids.

24. Section 173.301a is added to read as follows:

§ 173.301a Additional general requirements for shipment of specification cylinders.

(a) *General.* The requirements in this section are in addition to the requirements in § 173.301 and apply to the shipment of gases in specification cylinders.

(b) *Authorized cylinders not marked with a service pressure.* For authorized cylinders not marked with a service pressure, the service pressure is designated as follows:

Specification marking	Service Pressure psig
3	1800
3E	1800
8	250

(c) *Cylinder pressure at 21° C (70° F).* The pressure in a cylinder at 21° C (70° F) may not exceed the service pressure for which the cylinder is marked or designated, except as provided in § 173.302a(b). For certain liquefied gases, the pressure at 21° C (70° F) must be lower than the marked service pressure to avoid having a pressure at a temperature of 55° C (131° F) that is greater than permitted.

(d) *Cylinder pressure at 55° C (131° F).* The pressure in a cylinder at 55° C (131° F) may not exceed 5/4 times the service pressure, except:

(1) For a cylinder filled with acetylene, liquefied nitrous oxide, or carbon dioxide.

(2) For a cylinder filled in accordance with § 173.302a(b), the pressure in the cylinder at 55° C (131° F) may not exceed 5/4 times the filling pressure.

(3) For toxic materials, the pressure in the cylinder at 55° C (131° F) may not exceed the service pressure of the cylinder.

(e) *Grandfather clause.* A cylinder in domestic use prior to the date on which the specification for the cylinder was first made effective may be used if the cylinder has been properly tested and otherwise conforms to the requirements applicable to the gas with which it is charged.

§ 173.301b [Reserved]

25. Section 173.301b is added and reserved.

26. Section 173.302 is revised to read as follows:

§ 173.302 Filling of cylinders with nonliquefied (permanent) compressed gases.

(a) *General requirements.* A cylinder filled with a nonliquefied compressed gas (except gas in solution) must be offered for transportation in accordance with the requirements of this section and §§ 173.301, 173.301a, 173.302a, and 173.305, as applicable. Where more than one section applies to a cylinder, the most restrictive requirements must be followed.

(b) *Aluminum cylinders in oxygen service.* Each aluminum cylinder filled with oxygen must meet all of the following conditions:

(1) Each valve or portion of a valve that may come into contact with the oxygen being transported in the cylinder must be constructed of brass or stainless steel.

(2) Each cylinder opening must be configured with straight threads only.

(3) Each cylinder must be cleaned in accordance with the requirements of Federal Specification RR–C–901C, paragraphs 3.3.1 and 3.3.2 (incorporated by reference; see § 171.7 of this subchapter). Cleaning agents equivalent to those specified in RR–C–901C may be used provided they do not react with oxygen. One cylinder selected at random from a group of 200 or fewer and cleaned at the same time must be tested for oil contamination in accordance with Specification RR–C–901C, paragraph 4.4.2.2 (incorporated by reference; *see* § 171.7 of this subchapter), and meet the specified standard of cleanliness.

(4) The pressure in each cylinder may not exceed 3000 psig at 21°C (70°F).

(c) Notwithstanding the provisions of § 173.24(b)(1), an authorized cylinder containing oxygen continuously fed to tanks containing live fish may be offered for transportation and transported.

(d) Shipment of Division 2.1 materials in aluminum cylinders is authorized for transportation only by motor vehicle, rail car, or cargo-only aircraft.

27. Section 173.302a is added to read as follows:

§ 173.302a Additional requirements for shipment of nonliquefied (permanent) compressed gases in specification cylinders.

(a) *Detailed filling requirements.* Nonliquefied compressed gases (except gas in solution) for which filling requirements are not specifically prescribed in § 173.304a must be shipped subject to the requirements in this section and §§ 173.301, 173.301a, 173.302, and 173.305 in specification cylinders, as follows:

(1) DOT 3, 3A, 3AA, 3AL, 3B, 3E, 4B, 4BA and 4BW cylinders.

(2) DOT 3HT cylinders. These cylinders are authorized for aircraft use only and only for nonflammable gases. They have a maximum service life of 24 years from the date of manufacture. The cylinders must be equipped with frangible disc type pressure relief devices that meet the requirements of § 173.301(f). Each frangible disc must have a rated bursting pressure not exceeding 90 percent of the minimum required test pressure of the cylinder. Discs with fusible metal backing are not permitted. Specification 3HT cylinders may be offered for transportation only when packed in strong outer packagings conforming to the requirements of § 173.25.

(3) For a DOT 39 cylinder filled with a Division 2.1 material, the internal volume of the cylinder may not exceed 1.23 L (75 in^3).

(4) DOT 3AX, 3AAX, and 3T cylinders are authorized for Division 2.1 and 2.2 materials and for carbon monoxide. DOT 3T cylinders are not authorized for hydrogen. When used in methane service, the methane must be a nonliquefied gas with a minimum purity of 98.0 percent methane and commercially free of corroding components.

(5) Aluminum cylinders manufactured in conformance with specifications DOT 39 and 3AL are authorized for oxygen only under the conditions specified in § 173.302(b).

(b) *Special filling limits for DOT 3A, 3AX, 3AA, 3AAX, and 3T cylinders.* A DOT 3A, 3AX, 3AA, 3AAX, and 3T cylinder may be filled with a compressed gas, other than a liquefied, dissolved, Division 2.1, or Division 2.3 gas, to a pressure 10 percent in excess of its marked service pressure, provided:

(1) The cylinder is equipped with a frangible disc pressure relief device (without fusible metal backing) having a bursting pressure not exceeding the minimum prescribed test pressure.

(2) The cylinder's elastic expansion was determined at the time of the last test or retest by the water jacket method.

(3) Either the average wall stress or the maximum wall stress does not exceed the wall stress limitation shown in the following table:

Type of steel	Average wall stress limitation	Maximum wall stress limitation
I. Plain carbon steels over 0.35 carbon and medium manganese steels	53,000	58,000
II. Steels of analysis and heat treatment specified in spec. 3AA	67,000	73,000
III. Steels of analysis and heat treatment specified in spec. DOT–3T	87,000	94,000
IV. Plain carbon steels less than 0.35 carbon made prior to 1920	45,000	48,000

(i)(A) The average wall stress must be computed from the elastic expansion data using the following formula:

$$S = 1.7EE / KV - 0.4P$$

Where:

S = wall stress, pounds per square inch;

EE = elastic expansion (total less permanent) in cubic centimeters;

K = factor $\times 10^{-7}$ experimentally determined for the particular type of cylinder being tested or derived in accordance with CGA Pamphlet C–5;

V = internal volume in cubic centimeter (1 cubic inch = 16.387 cubic centimeters);

P = test pressure, pounds per square inch.

(B) The formula in paragraph (b)(3)(i)(A) of this section is derived from the formula in paragraph (b)(3)(ii) of this section and the following:

$EE = (PKVD^2) / (D^2 - d^2)$

(ii) The maximum wall stress must be computed from the formula:

$S = (P(1.3D^2 + 0.4d^2)) / (D^2 - d^2)$

Where:

S = wall stress, pounds per square inch;
P = test pressure, pounds per square inch;
D = outside diameter, inches;
d = D–2t, where t=minimum wall thickness determined by a suitable method.

(iii) Compliance with average wall stress limitation may be determined by computing the elastic expansion rejection limit in accordance with CGA Pamphlet C–5 (incorporated by reference; *see* § 171.7 of this subchapter), by reference to data tabulated in CGA Pamphlet C–5, or by the manufacturer's marked elastic expansion rejection limit (REE) on the cylinder.

(4) An external and internal visual examination made at the time of test or retest shows the cylinder to be free from excessive corrosion, pitting, or dangerous defects.

(5) A plus sign (+) is added following the test date marking on the cylinder to indicate compliance with paragraphs (b)(2), (b)(3), and (b)(4) of this section.

(c) *Carbon monoxide*. Carbon monoxide must be offered in a DOT 3, 3A, 3AX, 3AA, 3AAX, 3AL, 3E, or 3T cylinder having a minimum service pressure of 1800 psig. The pressure in a steel cylinder may not exceed 1000 psig at 21° C (70° F), except that if the gas is dry and sulfur free, the cylinder may be filled to 5/6 of the cylinder's service pressure or 2000 psig, whichever is less. A DOT 3AL cylinder may be filled to its marked service pressure. A DOT 3AL cylinder is authorized only when transported by motor vehicle, rail car, or cargo-only aircraft.

(d) *Diborane and diborane mixtures*. Diborane and diborane mixed with compatible compressed gas must be offered in a DOT 3AA1800 cylinder. The maximum filling density of the diborane may not exceed 7 percent. Diborane mixed with compatible compressed gas may not have a pressure exceeding the service pressure of the cylinder if complete decomposition of the diborane occurs. Cylinder valve assemblies must be protected in accordance with § 173.301(h).

§ 173.302b [Reserved]

28. Section 173.302b is added and reserved.

29. Section 173.304 is revised to read as follows:

§ 173.304 Filling of cylinders with liquefied compressed gases.

(a) *General requirements*. Liquefied compressed gases (except gas in solution) must be shipped in accordance with the requirements in this section and in §§ 173.301, 173.301a, 173.304a, and 173.305.

(1) A DOT 3AL cylinder may not be used for any material with a primary or subsidiary hazard of Class 8.

(2) Shipments of Division 2.1 materials in aluminum cylinders are authorized only when transported by motor vehicle, rail car, or cargo-only aircraft.

(b) *Filling limits*. Except for carbon dioxide; 1,1-Difluoroethylene (R–1132A); nitrous oxide; and vinyl fluoride, inhibited, the liquid portion of a liquefied gas may not completely fill the packaging at any temperature up to and including 54° C (130° F). The liquid portion of vinyl fluoride, inhibited, may completely fill the cylinder at 54° C (130° F) provided the pressure at the critical temperature does not exceed 1.25 times the service pressure of the cylinder.

(c) *Mixture of compressed gas and other material*. A mixture of compressed gas must be shipped in accordance with § 173.305.

(d) Refrigerant and dispersant gases. Nontoxic and nonflammable refrigerant or dispersant gases must be offered for transportation in cylinders prescribed in § 173.304a, or in DOT 2P and 2Q containers (§§ 178.33, 178.33a of this subchapter). DOT 2P and 2Q containers must be packaged in a strong wooden or fiberboard box of such design as to protect valves from damage or accidental functioning under conditions incident to transportation. Pressure in the inside metal containers may not exceed 87 psia at 21° C (70° F). Each completed metal container filled for shipment must be heated until its contents reach a minimum temperature of 54° C (130° F) without evidence of leakage, distortion, or other defect. Each outside package must be plainly marked ''INSIDE CONTAINERS COMPLY WITH PRESCRIBED SPECIFICATIONS''.

(e) *Engine starting fluid*. Engine starting fluid containing a flammable compressed gas or gases must be shipped in a cylinder as prescribed in § 173.304a or as follows:

(1) Inside non-refillable metal containers having a capacity not greater than 500 mL (32 in ^{3}). The containers must be packaged in strong, tight outer packagings. The pressure in the container may not exceed 145 psia at 54° C (130° F). If the pressure exceeds 145 psia at 54° C (130° F), a DOT 2P container must be used. In either case, the metal container must be capable of withstanding, without bursting, a pressure of 1.5 times the pressure of the contents at 54° C (130° F). The liquid content of the material and gas may not completely fill the container at 54° C (130° F). Each container filled for shipment must have been heated until its contents reach a minimum temperature of 54° C (130° F), without evidence of leakage, distortion, or other defect. Each outside shipping container must be plainly marked, ''INSIDE CONTAINERS COMPLY WITH PRESCRIBED SPECIFICATIONS''.

(2) [Reserved]

30. Section 173.304a is added to read as follows:

§ 173.304a Additional requirements for shipment of liquefied compressed gases in specification cylinders.

(a) *Detailed filling requirements*. Liquefied gases (except gas in solution) must be offered for transportation, subject to the requirements in this section and §§ 173.301 and 173.304, in specification cylinders, as follows:

(1) DOT 3, 3A, 3AA, 3AL, 3B, 3BN, 3E, 4B, 4BA, 4B240ET, 4BW, 4E, 39, except that no DOT 4E or 39 packaging may be filled and shipped with a mixture containing a pyrophoric liquid, carbon bisulfide (disulfide), ethyl chloride, ethylene oxide, nickel carbonyl, spirits of nitroglycerin, or toxic material (Division 6.1 or 2.3), unless specifically authorized in this part.

(2) For the gases named, the following requirements apply (for cryogenic liquids, see § 173.316):

Kind of gas	Maximum permitted filling density (percent) (see Note 1)	Packagings marked as shown in this column or of the same type with higher service pressure must be used except as provided in §§ 173.301(a)(1), 173.301(a)(4) (see notes following table)
Anhydrous ammonia	54	DOT–4; DOT–3A480; DOT–3AA480; DOT–3A480X; DOT–4A480; DOT–4AA480; DOT–3; DOT–3E1800; DOT–3AL480.
Bromotrifluoromethane (R–13B1 or H–1301)	124	DOT–3A400; DOT–3AA400; DOT–3B400; DOT–4A400; DOT–4AA480; DOT–4B400; DOT–4BA400; DOT–4BW400; DOT–3E1800; DOT–39; DOT–3AL40.
Carbon dioxide (*see* Notes 4, 7, and 8)	68	DOT–3A1800; DOT–3AX1800; DOT–3AA1800; DOT–3AAX1800; DOT–3; DOT–3E1800; DOT–3T1800; DOT–3HT2000; DOT–39; DOT–3AL1800.
Carbon dioxide, refrigerated liquid (*see* paragraph (e) of this section).		DOT–4L.
Chlorine (*see* Note 2)	125	DOT–3A480; DOT–3AA480; DOT–3; DOT–3BN480; DOT–3E1800.
Chlorodifluroethane or 1-Chloro-1, 1-difluoroethane (R–142b).	100	DOT–3A150; DOT–3AA150; DOT–3B150; DOT–4B150; DOT–4BA225; DOT–4BW225; DOT–3E1800; DOT–39; DOT–3AL150.
Chlorodifluoromethane (R–22) (*see* Note 8)	105	DOT–3A240; DOT–3AA240; DOT–3B240; DOT–4B240; DOT–4BA240; DOT–4BW240; DOT–4B240ET; DOT–4E240; DOT–39; DOT–41; DOT–3E1800; DOT–3AL240.
Chloropentafluorethane (R–115)	110	DOT–3A225; DOT–3AA225; DOT–3B225; DOT–4A225; DOT–4BA225; DOT–4B225; DOT–4BW225; DOT–3E1800; DOT–39; DOT–3AL225.
Chlorotrifluoromethane (R–13) (*see* Note 8)	100	DOT–3A1800; DOT–3AA1800; DOT–3; DOT–3E1800; DOT–39; DOT–3AL1800.
Cyclopropane (*see* Note 8)	55	DOT–3A225; DOT–3A480X; DOT–3AA225; DOT–3B225; DOT–4A225; DOT–4AA480; DOT4B225; DOT–4BA225; DOT–4BW225; DOT–4B240ET; DOT–3; DOT–3E1800; DOT–39; DOT–3AL225.
Dichlorodifluoromethane (R–12) (*see* Note 8)	119	DOT–3A225; DOT–3AA225; DOT–3B225; DOT–4A225; DOT–4B225; DOT–4BA225; DOT–4BW225; DOT–4B240ET; DOT–4E225; DOT–9; DOT–39; DOT–41; DOT–3E1800; DOT–3AL225.
Dichlorodifluoromethane and difluoroethane mixture (constant boiling mixture) (R–500) (*see* Note 8).	Not liquid full at 130°F	DOT–3A240; DOT–3AA240; DOT–3B240; DOT–3E1800; DOT–4A240; DOT–4B240; DOT–4BA240; DOT–4BW240; DOT–4E240; DOT–9; DOT–39.
1,1-Difluoroethane (R–152a) (*see* note 8)	79	DOT–3A150; DOT–3AA150; DOT–3B150; DOT–4B150; DOT–4BA225; DOT–4BW225; DOT–3E1800; DOT–3AL150.
1,1-Difluoroethylene (R–1132A)	73	DOT–3A2200; DOT–3AA2200; DOT–3AX2200; DOT–3AAX2200; DOT–3T2200; DOT–39.
Dimethylamine, anhydrous	59	DOT–3A150; DOT–3AA150; DOT–3B150; DOT–4B150; DOT–4BA225; DOT–4BW225; ICC–3E1800.
Ethane (*see* Note 8)	35.8	DOT–3A1800; DOT–3AX1800; DOT–3AA1800; DOT–3AAX1800; DOT–3; DOT–3E1800; DOT–3T1800; DOT–39; DOT–3AL1800.
Ethane (*see* Note 8)	36.8	DOT–3A2000; DOT–3AX2000; DOT–3AA2000; DOT–3AAX2000; DOT–3T2000; DOT–39; DOT–3AL2000.
Ethylene (*see* Note 8)	31.0	DOT–3A1800; DOT–3AX1800; DOT–3AA1800; DOT–3AAX1800; DOT–3; DOT–3E1800; DOT–3T1800; DOT–39; DOT–3AL1800.
Ethylene (*see* Note 8)	32.5	DOT–3A2000; DOT–3AX2000; DOT–3AA2000; DOT–3AAX2000; DOT–3T2000; DOT–39; DOT–3AL2000.
Ethylene (*see* Note 8)	35.5	DOT–3A2400; DOT–3AX2400; DOT–3AA2400; DOT–3AAX2400; DOT–3T2400; DOT–39; DOT–3AL2400.
Hydrogen chloride, anhydrous	65	DOT–3A1800; DOT–3AA1800; DOT–3AX1800; DOT–3AAX1800; DOT–3; DOT–3T1800; DOT–3E1800.
Hydrogen sulfide (*see* Note 10)	62.5	DOT–3A480; DOT–3AA480; DOT–3B480; DOT–4A480; DOT–4B480; DOT–4BA480; DOT–4BW480.; DOT–3E1800; DOT–3AL480.
Insecticide, gases liquefied (*see* Notes 8 and 12)	Not liquid full at 130°F	DOT–3A300; DOT–3AA300; DOT–3B300; DOT–4B300; DOT–4BA300; DOT–4BW300; DOT–9; DOT–40; DOT–41; DOT–3E1800.
Liquefied nonflammable gases, other than classified flammable, corrosive, toxic & mixtures or solution thereof filled w/nitrogen, carbon dioxide, or air (*see* Notes 7 and 8)..	Not liquid full at 130°F	Specification packaging authorized in paragraph (a)(1) of this section and DOT–3HT; DOT 4D; DOT–4DA; DOT–4DS.

Kind of gas	Maximum permitted filling density (percent) (see Note 1)	Packagings marked as shown in this column or of the same type with higher service pressure must be used except as provided in §§ 173.301(a)(1), 173.301(a)(4) (see notes following table)
Methyl acetylene-propadiene, mixtures, stabilized DOT–3A240; (*see* Note 5)..	Not liquid at 130°F	DOT–4B240 without brazed seams; DOT–4BA240 without brazed seams; DOT–3A240; DOT–3AA240; DOT–3B240; DOT–3E1800; DOT–4BW240; DOT–4E240; DOT–4B240ET; DOT–4; DOT–41; DOT–3AL240.
Methyl chloride	84	DOT–3A225; DOT–3AA225; DOT–3B225; DOT–4A225; DOT–4B225; DOT–4BA225; DOT–4BW225; DOT–3; DOT–4; DOT–38; DOT–3E1800; DOT–4B240ET. Cylinders complying with DOT–3A150; DOT–3B150; DOT–4A150; and DOT–4B150 manufactured prior to Dec. 7, 1936 are also authorized.
Methyl mercaptan	80	DOT–3A240; DOT–3AA240; DOT–3B240; DOT–4B240; DOT–4B240ET; DOT–3E1800; DOT–4BA240; DOT–4BW240.
Nitrosyl chloride	110	DOT–3BN400 only.
Nitrous oxide (*see* Notes 7, 8, and 11)	68	DOT–3A1800; DOT–3AX1800; DOT–3AA1800; DOT–3AAX1800; DOT–3; DOT–3E1800; DOT–3T1800; DOT–3HT2000; DOT–39; DOT- 3AL1800.
Nitrous oxide, refrigerated liquid (*see* paragraph (e) of this section.).		DOT–4L.
Refrigerant gas, n.o.s. or Dispersant gas, n.o.s. (*see* Notes 8 and 13).	Not liquid full at 130°F	DOT–3A240; DOT–3AA240; DOT–3B240; DOT–3E1800; DOT–4A240; DOT–4B240; DOT–4BA240; DOT–4BW240; DOT–4E240; DOT–9; DOT–39; DOT–3AL240.
Sulfur dioxide (*see* note 8)	125	DOT–3A225; DOT–3AA225; DOT–3B225; DOT–4A225; DOT–4B225; DOT–4BA225; DOT–4BW225; DOT–4B240ET; DOT–3; DOT–4; DOT–38; DOT–39; DOT–3E1800; DOT–3AL225.
Sulfur hexafluoride	120	DOT–3A1000; DOT–3AA1000; DOT–AAX2400; DOT–3; DOT–3AL1000; DOT–3E1800; DOT–3T1800.
Sulfuryl fluoride	106	DOT–3A480; DOT–3AA480; DOT–3E1800; DOT–4B480; DOT–4BA480; DOT–4BW480.
Tetrafluoroethylene/inhibit	90	DOT–3A1200; DOT–3AA1200; DOT–3E1800.
Trifluorochloroethylene, inhibited	115	DOT–3A300; DOT–3AA300; DOT–3B300; DOT–4A300; DOT–4B300; DOT–4BA300; DOT–4BW300; DOT–3E1800.
Trimethylamine, anhydrous	57	DOT–3A150; DOT–3AA150; DOT–3B150; DOT–4B150; DOT–4BA225; DOT–4BW225; DOT–3E1800.
Vinyl chloride (*see* Note 5)	84	DOT–4B150 without brazed seams; DOT–4BA225 without brazed seams; DOT–4BW225; DOT–3A150; DOT–3AA150; DOT–3E1800; DOT–3AL150.
Vinyl fluoride, inhibited	62	DOT–3A1800; DOT–3AA1800; DOT–3E1800; DOT–3AL1800.
Vinyl methyl ether, inhibited (*see* Note 5)	68	DOT–4B150, without brazed seams; DOT–4BA225 without brazed seams; DOT–4BW225; DOT–3A150; DOT–3AA150; DOT–3B1800; DOT–3E1800.

Note 1: ''Filling density'' means the percent ratio of the weight of gas in a packaging to the weight of water that the container will hold at 16° C (60° F). (1 lb of water=27.737 in^3 at 60° F.).

Note 2: Cylinders purchased after Oct. 1, 1944, for the transportation of chlorine must contain no aperture other than that provided in the neck of the cylinder for attachment of a valve equipped with an approved pressure relief device. Cylinders purchased after Nov. 1, 1935, and filled with chlorine may not contain over 68.04 kg (150 lb) of gas.

Note 3: [Reserved]

Note 4: Special carbon dioxide mining devices containing a heating element and filled with not over 2.72 kg (6 lb) of carbon dioxide may be filled to a density of not over 85 percent, provided the cylinder is made of steel with a calculated bursting pressure in excess of 39000 psig, fitted with a frangible disc that will operate at not over 57 percent of that pressure, and is able to withstand a drop of 10 feet when striking crosswise on a steel rail while under a pressure of at least 3000 psig. Such devices must be shipped in strong boxes or must be wrapped in heavy burlap and bound by 12-gauge wire with the wire completely covered by friction tape. Wrapping must be applied so as not to interfere with the functioning of the frangible disc pressure relief device. Shipments must be described as ''liquefied carbon dioxide gas (mining device)'' and marked, labeled, and certified as prescribed for liquefied carbon dioxide.

Note 5: All parts of valve and pressure relief devices in contact with contents of cylinders must be of a metal or other material, suitably treated if necessary, that will not cause formation of any acetylides.

Note 6: [Reserved]

Note 7: Specification 3HT cylinders for aircraft use only, having a maximum service life of 24 years. Authorized only for nonflammable gases. Cylinders must be equipped with pressure relief devices of the frangible disc type that meet the requirements of § 173.301(f). Each frangible disc must have a rated bursting pressure that does not exceed 90 percent of the minimum required test pressure of the cylinder. Discs with fusible metal backing are not permitted. Cylinders may be shipped only when packed in strong outside packagings.

Note 8: *See* § 173.301(a)(8).

Note 9: [Reserved]

Note 10: Each valve outlet must be sealed by a threaded cap or a threaded solid plug.

Note 11: Must meet the valve and cleaning requirements in § 173.302(b).

Note 12: For an insecticide gas that is nontoxic and nonflammable, *see* § 173.305(c).

Note 13: For a refrigerant or dispersant gas that is nontoxic and nonflammable, *see* § 173.304(d).

(b) [Reserved]

(c) *Verification of content in cylinder.* Except as noted in paragraph (d)(4) of this section, the amount of liquefied gas filled into a cylinder must be by weight or, when the gas is lower in pressure than required for liquefaction, a pressure-temperature chart for the specific gas may be used to ensure that the service pressure at 54° C (130° F) will not exceed 5/4 of the service pressure at 21° C (70° F). The weight of liquefied gas filled into the cylinder also must be checked, after disconnecting the cylinder from the filling line, by the use of an accurate scale.

(d) Requirements for liquefied petroleum gas. (1) Filling density limits are as follows:

Minimum specific gravity of liquid material at 60° F	Maximum the filling density in percent of the water-weight capacity of the cylinder
0.271 to 0.289	26
0.290 to 0.306	27
0.307 to 0.322	28
0.323 to 0.338	29
0.339 to 0.354	30
0.355 to 0.371	31
0.372 to 0.398	32
0.399 to 0.425	33
0.426 to 0.440	34
0.441 to 0.452	35
0.453 to 0.462	36
0.463 to 0.472	37
0.473 to 0.480	38
0.481 to 0.488	39
0.489 to 0.495	40
0.496 to 0.503	41
0.504 to 0.510	42
0.511 to 0.519	43
0.520 to 0.527	44
0.528 to 0.536	45
0.537 to 0.544	46
0.545 to 0.552	47
0.553 to 0.560	48
0.561 to 0.568	49
0.569 to 0.576	50
0.577 to 0.584	51
0.585 to 0.592	52
0.593 to 0.600	53
0.601 to 0.608	54
0.609 to 0.617	55
0.618 to 0.626	56
0.627 to 0.634	57

(2) Subject to § 173.301a(d), any filling density percentage prescribed in this section is authorized to be increased by a factor of 2 for liquefied petroleum gas in DOT 3 cylinders or in DOT 3A cylinders marked for 1800 psig, or higher, service pressure.

(3) Liquefied petroleum gas must be shipped in specification cylinders as follows:

(i) DOT 3, 3A, 3AA, 3B, 3E, 3AL, 4B, 4BA, 4B240ET, 4BW, 4E, or 39 cylinders. Shipments of flammable gases in DOT 3AL cylinders are authorized only when transported by motor vehicle, rail car, or cargo-only aircraft.

(ii) Additional containers may be used within the limits of quantity and pressure as follows:

Type of container	Maximum capacity (cubic inches)	Maximum filling pressure (psig)
DOT–2P or DOT–2Q (see Note 1)	31.83	45 psig at 70° F and 105 psig at 130° F (see Note 2).
DOT–2P or DOT–2Q (see Note 1)	31.83	35 psig at 70° F and 100 psig at 130° F.

Note 1: Containers must be packed in strong wooden or fiber boxes of such design as to protect valves from damage or accidental functioning under conditions normally incident to transportation. Each completed container filled for shipment must have been heated until its contents reach a temperature of 54° C (130° F), without evidence of leakage, distortion, or other defect. Each outside shipping container must be plainly marked ''INSIDE CONTAINERS COMPLY WITH PRESCRIBED SPECIFICATIONS'.

Note 2: A container must be equipped with a pressure relief device that will prevent rupture of the container and dangerous projection of a closing device when exposed to fire.

(4) *Verification of content.* A cylinder with a water capacity of 90.72 kg (200 lb) or more and for use with a liquefied petroleum gas with a specific gravity of 9.504 or greater at 16° C (60° F) may have the quantity of its contents determined by using a fixed length dip tube gauging device. The length of the dip tube must be such that when a liquefied petroleum gas, with a specific volume of 0.03051 cu. ft./lb. at a temperature of 40° F, is filled into the container, the liquid just reaches the bottom of the tube. The weight of this liquid may not exceed 42 percent of the water capacity of the container, which must be stamped on the cylinder. The length of the dip tube, expressed in inches carried out to one decimal place and prefixed with the letters ''DT'', must be stamped on the container and on the exterior of removable type dip tube. For the purpose of this requirement, the marked length must be expressed as the distance measured along the axis of a straight tube from the top of the boss through which the tube is inserted to the proper level of the liquid in the container. The length of each dip tube must be checked when installed by weighing each container after filling except when installed in groups of substantially identical containers, in which case one of each 25 containers must be weighed. The quantity of liquefied gas in each container must be checked by means of the dip tube after disconnecting from the filling line. The outlet from the dip tube may not be larger than 0.1016 centimeters (0.040 inch; No. 54 drill bit size orifice). A container representative of each day's filling at each filling plant must have its contents checked by weighing after disconnecting from the filling line.

(e) *Carbon dioxide, refrigerated liquid or nitrous oxide, refrigerated liquid.* (1) The following provisions apply to carbon dioxide, refrigerated liquid, and nitrous oxide, refrigerated liquid:

(i) DOT 4L cylinders conforming to the provisions of this paragraph are authorized.

(ii) Each cylinder must be protected with at least one pressure relief device and at least one frangible disc conforming to § 173.301(f) and paragraph (a)(2) of this section. The relieving capacity of the pressure relief device system must be equal to or greater than that calculated by the applicable formula in paragraph 5.9 of CGA Pamphlet S–1.1 (incorporated by reference; *see* § 171.7 of this subchapter).

(iii) The temperature and pressure of the gas at the time the shipment is offered for transportation may not exceed −18 ° C (0 ° F) and 290 psig for carbon dioxide and −15.6 ° C (+4 ° F) and 290 psig for nitrous oxide. Maximum time in transit may not exceed 120 hours.

(2) The following pressure relief device settings, design service temperatures and filling densities apply:

Pressure relief device setting maximum start—to discharge gauge pressure inpsig	Maximum permitted filling density (percent by weight)	
	Carbon dioxide, refrigerated liquid	Nitrous oxide, refrigerated liquid
105 psig	108	104
170 psig	105	101
230 psig	104	99
295 psig	102	97
360 psig	100	95
450 psig	98	83
540 psig	92	87
625 psig	86	80
Design service temperature ° C(° F)	−196 ° C(−320 °F)	−196 ° C(−320 °F)

§ 173.304b [Reserved]

31. Section 173.304b is added and reserved.

32. In § 173.305, the parenthetical phrase in paragraph (b) is revised to read as follows:

§ 173.305 Charging of cylinders with a mixture of compressed gas and other material.

* * * * *

(b) *Filling limits.* (See § 173.301.)

* * *

* * * * *

33. In § 173.306, paragraph (g)(5) is revised to read as follows:

§ 173.306 Limited quantities of compressed gases.

* * * * *

(g) * * *

(5) Each tank must be overpacked in a strong outside container in accordance with § 173.301(a)(8).

* * * * *

34. In § 173.315, in paragraph (a), in Note 2 following the table, the reference ''§ 173.301(d)'' is revised to read ''paragraph (q) of this section'', and paragraph (q) is added to read as follows:

§ 173.315 Compressed gases in cargo tanks and portable tanks.

* * * * *

(q) Manifolding is authorized for cargo tanks containing anhydrous ammonia provided each individual cargo tank is equipped with a pressure relief device or valves and gauging devices as required by paragraphs (h) and (i) of this section. Each valve must be tightly closed while the cargo tank is in transit. Each cargo tank must be filled separately.

35. Section 173.334 is revised to read as follows:

§ 173.334 Organic phosphates mixed with compressed gas.

Hexaethyl tetraphosphate, parathion, tetraethyl dithio pyrophosphate, tetraethyl pyrophosphate, or other Division 6.1 organic phosphates (including a compound or mixture), may be mixed with a non-flammable compressed gas. This mixture may not contain more than 20 percent by weight of organic phosphate and must be packaged in DOT 3A240, 3AA240, 3B240, 4A240, 4B240, 4BA240, or 4BW240 cylinders meeting all of the following requirements:

(a) Each cylinder may be filled with not more than 5 kg (11.0 lb) of the mixture, to a maximum filling density of not more than 80 percent of the water capacity.

(b) No cylinder may be equipped with an education tube or a fusible plug.

(c) No cylinder may be equipped with any valve unless the valve is a type approved by the Associate Administrator.

(d) Cylinders must be overpacked in a box, crate, or other strong outside packaging conforming to the requirements of § 173.25 and arranged to protect each valve or other closing device from damage. Except as provided in paragraph (e) of this section, no more than four cylinders may be packed in a strong outside packaging. Each strong outside packaging with its closing device protection must be sufficiently strong to protect all parts of each cylinder from deformation or leakage if the completed package is dropped 1.8 m (6 feet) onto a non-yielding surface, such as concrete or steel, impacting at the packaging's weakest point.

(e) Cylinders may be packed in strong wooden boxes with valves or other closing devices protected from damage, with not more than twelve cylinders in one outside wooden box. An outer fiberboard box may be used when not more than four such cylinders are to be shipped in one packaging. Valves must be adequately protected. Box and valve protection must be of sufficient strength to protect all parts of inner packagings and valves from deformation or breakage resulting from a drop of at least 1.8 m (6 feet) onto a non-yielding surface, such as concrete or steel, impacting at the weakest point.

36. Section 173.336 is revised to read as follows:

§ 173.336 Nitrogen dioxide, liquefied, or dinitrogen tetroxide, liquefied.

Nitrogen dioxide, liquefied, or dinitrogen tetroxide, liquefied, must be packaged in specification cylinders as prescribed in § 173.192. Specification cylinders prescribed in § 173.192 with valve removed are authorized. Each valve opening must be closed by means of a solid metal plug with tapered thread properly luted to prevent leakage. Transportation in DOT 3AL cylinders is authorized only by highway or rail. Each cylinder must be cleaned in compliance with the requirements of Federal Specification RR–C–901C, paragraphs 3.3.1 and 3.3.2 (incorporated by reference; see § 171.7 of this subchapter). Cleaning agents equivalent to those specified in RR–C–901C may be used; however, any cleaning agent must not be capable of reacting with oxygen. One cylinder selected at random from a group of 200 or fewer and cleaned at the same time must be tested for oil contamination in accordance with Specification RR–C–901C, paragraphs 4.4.2.2 (incorporated by reference; *see* § 171.7 of this subchapter) and meet the standard of cleanliness specified therein.

37. Section 173.337 is revised to read as follows:

§ 173.337 Nitric oxide.

Nitric oxide must be packed in DOT 3A1800, 3AA1800, 3E1800, or 3AL1800 cylinders conforming to the requirements of § 173.40. Cylinders must be equipped with a stainless steel valve and valve seat that will not deteriorate if in contact with nitric oxide or nitrogen dioxide. Cylinders or valves may not be equipped with pressure relief devices of any type. In addition—

(a) Transportation in DOT 3AL or 3ALM cylinders is authorized only by highway or rail.

(b) Each cylinder must be cleaned in compliance with the requirements of Federal Specification RR–C–901C, paragraphs 3.3.1 and 3.3.2 (incorporated by reference; see § 171.7 of this subchapter). Cleaning agents equivalent to those specified in Federal Specification RR–C–901C may be used; however, any cleaning agent must not be capable of reacting with oxygen. One cylinder selected at random from a group of 200 or fewer and cleaned at the same time must be tested for oil contamination in accordance with Federal Specification RR–C–901C paragraph 4.4.2.2 (incorporated by reference; *see* § 171.7 of this subchapter) and meet the standard of cleanliness specified therein.

PART 177 —CARRIAGE BY PUBLIC HIGHWAY

38. The authority citation for part 177 continues to read as follows:

Authority: 49 U.S.C. 5101–5127; 49 CFR 1.53.

39. In § 177.840, paragraph (a)(1) is revised to read as follows:

§ 177.840 Class 2 (gases) materials.

* * * * *

(a) * * *

(1) *Cylinders.* Cylinders containing Class 2 (gases) materials must be securely restrained in an upright position, loaded in racks, or packed in boxes or crates and securely attached to the motor vehicle to prevent the cylinders from being shifted, overturned or ejected from the vehicle under normal transportation conditions. A cylinder containing a Class 2 material may be loaded in a horizontal position when the cylinder is designed so that the inlet port to the relief channel of the pressure relief device is located in the vapor space of the cylinder.

* * * * *

PART 178—SPECIFICATIONS FOR PACKAGINGS

40. The authority citation for part 178 continues to read as follows:

Authority: 49 U.S.C. 5101–5127; 49 CFR 1.53.

41. In § 178.35, paragraphs (b) introductory text, (b)(1), (c)(3)(iv), (d), (e), and (f)(3) are revised to read as follows:

§ 178.35 General requirements for specification cylinders.

* * * * *

(b) *Inspections and analyses.* Chemical analyses and tests required by this subchapter must be made within the United States, unless otherwise approved in writing by the Associate Administrator, in accordance with subpart I of part 107 of this chapter. Inspections and verification must be performed by—

(1) An independent inspection agency approved in writing by the Associate Administrator, in accordance with subpart I of part 107 of this chapter; or

* * * * *

(c) * * *

(3) * * *

(iv) Obtaining samples for all tests and check chemical analyses (**Note:** Recommended locations for test specimens taken from welded cylinders are depicted in Figures 1 through 5 in Appendix C to this subpart for the specific construction design.);

* * * * *

(d) *Defects and attachments.* Cylinders must conform to the following:

(1) A cylinder may not be constructed of material with seams, cracks or laminations, or other injurious defects.

(2) Metal attachments to cylinders must have rounded or chamfered corners or must be protected in such a manner as to prevent the likelihood of causing puncture or damage to other hazardous materials packages. This requirement applies to anything temporarily or permanently attached to the cylinder, such as metal skids.

(e) *Safety devices.* Pressure relief devices and protection for valves, safety devices, and other connections, if applied, must be as required or authorized by the appropriate specification, and as required in § 173.301 of this subchapter.

(f) * * *

(3) *Marking exceptions.* A DOT 3E cylinder is not required to be marked with an inspector's mark or a serial number.

* * * * *

§ 178.36 [Amended]

42. In § 178.36, in paragraph (k)(3)(i), the wording ''ASTM Standard E8'' is revised to read ''ASTM E 8 (incorporated by reference; see § 171.7 of this subchapter)''.

§ 178.37 [Amended]

43. In § 178.37, in paragraph (k)(3)(i), the wording ''ASTM Standard E8'' is revised to read ''ASTM E 8 (incorporated by reference; see § 171.7 of this subchapter)''.

§ 178.38 [Amended]

44. In § 178.38, in paragraph (k)(3)(i), the wording ''ASTM Standard E8'' is revised to read ''ASTM E 8 (incorporated by reference; see § 171.7 of this subchapter)''.

§ 178.39 [Amended]

45. In § 178.39, in paragraph (k)(3)(i), the wording ''ASTM Standard E8'' is revised to read ''ASTM E 8 (incorporated by reference; see § 171.7 of this subchapter)''.

§ 178.44 [Amended]

46. In § 178.44, in paragraph (m)(3)(i), the wording ''ASTM Standard E8'' is revised to read ''ASTM E 8 (incorporated by reference; see § 171.7 of this subchapter)''.

47. In § 178.45, paragraphs (h) and (j)(3)(i) are revised to read as follows:

§ 178.45 Specification 3T seamless steel cylinder.

* * * * *

(h) *Ultrasonic examination.* After the hydrostatic test, the cylindrical section of each vessel must be examined in accordance with ASTM Standard E 213 (incorporated by reference; see § 171.7 of this subchapter). The equipment used must be calibrated to detect a notch equal to five percent of the design minimum wall thickness. Any discontinuity indication greater than that produced by the five percent notch must be cause for rejection of the cylinder, unless the discontinuity is repaired within the requirements of this specification.

* * * * *

(j) *Basic conditions for acceptable physical testing.* * * *

(3) * * *

(i) This yield strength must be determined by the ''offset'' method or the ''extension under load'' method described in ASTM E 8 (incorporated by reference; see § 171.7 of this subchapter).

* * * * *

48. In § 178.46, in paragraph (b)(4), in Table 2, the entry ''6351–T6'' is removed, and Table 1 is revised to read as follows:

§ 178.46 Specification 3AL seamless aluminum cylinders.

* * * * *

(b) * * *

(4) * * *

TABLE 1.—HEAT OR CAST ANALYSIS FOR ALUMINUM; SIMILAR TO ''ALUMINUM ASSOCIATION''[1] ALLOY 6061
[CHEMICAL ANALYSIS IN WEIGHT PERCENT[2]]

Si min/max	Fe max	Cu min/max	Mn max	Mg min/max	Cr min/max	Zn max	Ti max	Pb max	Bi max	Other		A1
										each max	total max	
0.4/0.8	0.7	0.15/0.4	0.15	0.8/1.2	0.04/0.35	0.25	0.15	0.005	0.005	0.05	0.15	Bal.

[1] The ''Aluminum Association'' refers to ''Aluminum Standards and Data 1993'', published by the Aluminum Association Inc.
[2] Except for ''Pb'' and ''Bi'', the chemical composition corresponds with that of Table 1 of ASTM B221 for Aluminum Association alloy 6061.

* * * * *

§ 178.47 [Amended]

49. In § 178.47, in the fourth sentence of paragraph (d), the wording ''CGA Pamphlet C–3'' is revised to read ''CGA Pamphlet C–3 (incorporated by reference; *see* § 171.7 of this subchapter)''.

§ 178.50 [Amended]

50. In § 178.50, the following changes are made:

a. In paragraph (d) introductory text, in the fifth sentence, the wording ''CGA Pamphlet C–3'' is revised to read ''CGA Pamphlet C–3 (incorporated by reference; *see* § 171.7 of this subchapter)''.

b. In paragraph (k)(3)(i), the wording ''ASTM Standard E8'' is revised to read ''ASTM E 8 (incorporated by reference; *see* § 171.7 of this subchapter)''.

§ 178.51 [Amended]

51. In § 178.51, the following changes are made:

a. In paragraph (d)(2), the wording ''CGA Pamphlet C–3'' is revised to read ''CGA Pamphlet C–3 (incorporated by reference; *see* § 171.7 of this subchapter)''.

b. In paragraph (j)(3)(i), the wording ''ASTM Standard E8'' is revised to read ''ASTM E 8 (incorporated by reference; *see* § 171.7 of this subchapter)''.

c. In paragraph (l)(1), in the fourth sentence, the wording ''CGA Pamphlet C–3'' is revised to read ''CGA Pamphlet C–3 (incorporated by reference; *see* § 171.7 of this subchapter)''.

d. In paragraph (l)(2), in the last sentence, the wording ''CGA Pamphlet C–3'' is revised to read ''CGA Pamphlet C–3 (incorporated by reference; *see* § 171.7 of this subchapter)''.

e. In paragraph (l)(3), in the first sentence, the wording ''CGA Pamphlet C–3'' is revised to read ''CGA Pamphlet C–3 (incorporated by reference; *see* § 171.7 of this subchapter)''.

§ 178.53 [Amended]

52. In § 178.53, the following changes are made:

a. In paragraph (d), in the last sentence, the wording ''CGA Pamphlet C–3'' is revised to read ''CGA Pamphlet C–3 (incorporated by reference; *see* § 171.7 of this subchapter)''.

b. In paragraph (j)(5)(i), the wording ''ASTM Standard E8'' is revised to read ''ASTM E 8 (incorporated by reference; *see* § 171.7 of this subchapter)''.

§ 178.55 [Amended]

53. In § 178.55, in paragraph (k)(3)(i), the wording ''ASTM Standard E8'' is revised to read ''ASTM E 8 (incorporated by reference; *see* § 171.7 of this subchapter)''.

§ 178.56 [Amended]

54. In § 178.56, the following changes are made:

a. In paragraph (j)(3)(i), the wording ''ASTM Standard E8'' is revised to read ''ASTM E 8 (incorporated by reference; *see* § 171.7 of this subchapter)''.

b. In paragraph (l)(1), in the fourth sentence the wording ''CGA Pamphlet C–3'' is revised to read ''CGA Pamphlet C–3 (incorporated by reference; *see* § 171.7 of this subchapter)''.

c. In paragraph (l)(2), in the last sentence, the wording ''CGA Pamphlet C–3'' is revised to read ''CGA Pamphlet C–3 (incorporated by reference; *see* § 171.7 of this subchapter)''.

d. In paragraph (l)(3), in the first sentence, the wording ''CGA Pamphlet C–3'' is revised to read ''CGA Pamphlet C–3 (incorporated by reference; *see* § 171.7 of this subchapter)''.

55. In § 178.57, the first sentence in paragraph (d)(5), the first sentence in paragraph (e)(3), paragraph (j)(3)(i), the fourth sentence in paragraph (l)(1), the last sentence in paragraph (l)(2), the first sentence in paragraph (l)(3), the first sentence in paragraph (l)(4)(v), the second sentence in paragraph (l)(4)(vi), paragraph (m)(1), and the first sentence in paragraph (o)(1) are revised to read as follows:

§ 178.57 Specification 4L welded insulated cylinders.

* * * * *

(d) * * *

(5) Welding procedures and operations must be qualified in accordance with CGA Pamphlet C–3 (incorporated by reference; *see* § 171.7 of this subchapter). * * *

(e) * * *

(3) For welding the cylinder, each procedure and operator must be qualified in accordance with the sections of CGA Pamphlet C–3 (incorporated by reference; *see* § 171.7 of this subchapter) that apply. * * *

* * * * *

(j) * *

(3) * * *

(i) The yield strength must be determined by either the ''offset'' method or the ''extension under load'' method as prescribed in ASTM E 8 (incorporated by reference; *see* § 171.7 of this subchapter).

* * * * *

(l) * * *

(1) *Tensile test.* * * * The specimen must be taken across the major seam and must be prepared in accordance with and must meet the requirements of CGA Pamphlet C–3 (incorporated by reference; *see* § 171.7 of this subchapter). * * *

(2) *Guided bend test.* * * * Specimens must be taken across the particular seam being tested and must be prepared and tested in accordance with and must meet the requirements of CGA Pamphlet C–3 (incorporated by reference; *see* § 171.7 of this subchapter).

(3) *Alternate guided-bend test.* This test may be used and must be as specified in CGA Pamphlet C–3 (incorporated by reference; *see* § 171.7 of this subchapter). * * *

(4) *Impact tests.* * * *

(v) All impact test specimens must be of the charpy type, keyhole or milled U-notch, and must conform in all respects to ASTM E 23 (incorporated by reference; *see* § 171.7 of this subchapter). * * *

(vi) * * * The apparatus for testing the specimens must conform to requirements of ASTM Standard E 23 (incorporated by reference; *see* § 171.7 of this subchapter). * * *

* * * * *

(m) *Radiographic examination.* * * *

(1) The techniques and acceptability of radiographic inspection must conform to the standards set forth in CGA Pamphlet C–3 (incorporated by reference; *see* § 171.7 of this subchapter).

* * * * *

(o) * * *

(1) *Inner containment vessel (cylinder).* Electric furnace steel of uniform quality must be used. Chemical analysis must conform to ASTM A 240/A 240M (incorporated by reference; *see* § 171.7 of this subchapter), Type 304 stainless steel. * * *

* * * * *

§ 178.58 [Amended]

56. In § 178.58, the following changes are made:

a. In paragraph (d)(1), in the last sentence, the wording ''CGA Pamphlet C–3'' is revised to read ''CGA Pamphlet C–3 (incorporated by reference; *see* § 171.7 of this subchapter)''.

b. In paragraph (m)(5)(i), the wording ''ASTM Standard E8'' is revised to read ''ASTM E 8 (incorporated by reference; *see* § 171.7 of this subchapter)''.

§ 178.59 [Amended]

57. In § 178.59, the following changes are made:

a. In paragraph (d), in the last sentence, the wording ''CGA Pamphlet C–3'' is revised to read ''CGA Pamphlet C–3 (incorporated by reference; *see* § 171.7 of this subchapter)''.

b. In paragraph (j)(3)(i), the wording ''ASTM Standard E8'' is revised to read ''ASTM E 8 (incorporated by reference; *see* § 171.7 of this subchapter)''.

§ 178.60 [Amended]

58. In § 178.60, the following changes are made:

a. In paragraph (d), in the last sentence, the wording ''CGA Pamphlet C–3'' is revised to read ''CGA Pamphlet C–3 (incorporated by reference; *see* § 171.7 of this subchapter)''.

b. In paragraph (l)(3)(i), the wording ''ASTM Standard E8'' is revised to read ''ASTM E 8 (incorporated by reference; *see* § 171.7 of this subchapter)''.

c. In paragraph (n)(1), in the second sentence, the wording ''CGA Pamphlet C–3'' is revised to read ''CGA Pamphlet C–3 (incorporated by reference; *see* § 171.7 of this subchapter)''.

d. In paragraph (n)(2), in the last sentence, the wording ''CGA Pamphlet C–3'' is revised to read ''CGA Pamphlet C–3 (incorporated by reference; *see* § 171.7 of this subchapter)''.

e. In paragraph (n)(3), in the first sentence, the wording ''CGA Pamphlet C–3'' is revised to read ''CGA Pamphlet C–3 (incorporated by reference; *see* § 171.7 of this subchapter)''.

§ 178.61 [Amended]

59. In § 178.61, the following changes are made:

a. In paragraph (d)(4), the wording ''CGA Pamphlet C–3'' is revised to read ''CGA Pamphlet C–3 (incorporated by reference; *see* § 171.7 of this subchapter)''.

b. In paragraph (j)(3)(i), the wording ''ASTM Standard E8'' is revised to read ''ASTM E 8 (incorporated by reference; *see* § 171.7 of this subchapter)''.

c. In paragraph (l)(1), in the last sentence, the wording ''CGA Pamphlet C–3'' is revised to read ''CGA Pamphlet C–3 (incorporated by reference; *see* § 171.7 of this subchapter)''.

d. In paragraph (l)(2), in the last sentence, the wording ''CGA Pamphlet C–3'' is revised to read ''CGA Pamphlet C–3 (incorporated by reference; *see* § 171.7 of this subchapter)''.

e. In paragraph (l)(3), in the first sentence, the wording ''CGA Pamphlet C–3'' is revised to read ''CGA Pamphlet C–3 (incorporated by reference; *see* § 171.7 of this subchapter)''.

f. In paragraph (m)(1), in the first sentence, the wording ''CGA Pamphlet C–3'' is revised to read ''CGA Pamphlet C–3 (incorporated by reference; *see* § 171.7 of this subchapter)''.

§ 178.65 [Amended]

60. In § 178.65, in paragraph (c)(4), the wording ''CGA Pamphlet C–3'' is revised to read ''CGA Pamphlet C–3 (incorporated by reference; *see* § 171.7 of this subchapter)''.

§ 178.68 [Amended]

61. In § 178.68, the following changes are made:

a. In paragraph (j)(3)(i), the wording ''ASTM Standard E8'' is revised to read ''ASTM E 8 (incorporated by reference; *see* § 171.7 of this subchapter)''.

b. In paragraph (l)(2), in the third sentence, the wording ''CGA Pamphlet C–3'' is revised to read ''CGA Pamphlet C–3 (incorporated by reference; *see* § 171.7 of this subchapter)''.

62. Appendix A is added to subpart C of part 178, to read as follows:

Appendix A to Subpart C of Part 178—Illustrations: Cylinder Tensile Sample

The following figures illustrate the recommended locations for test specimens taken from welded cylinders:

BILLING CODE 4910–60–P

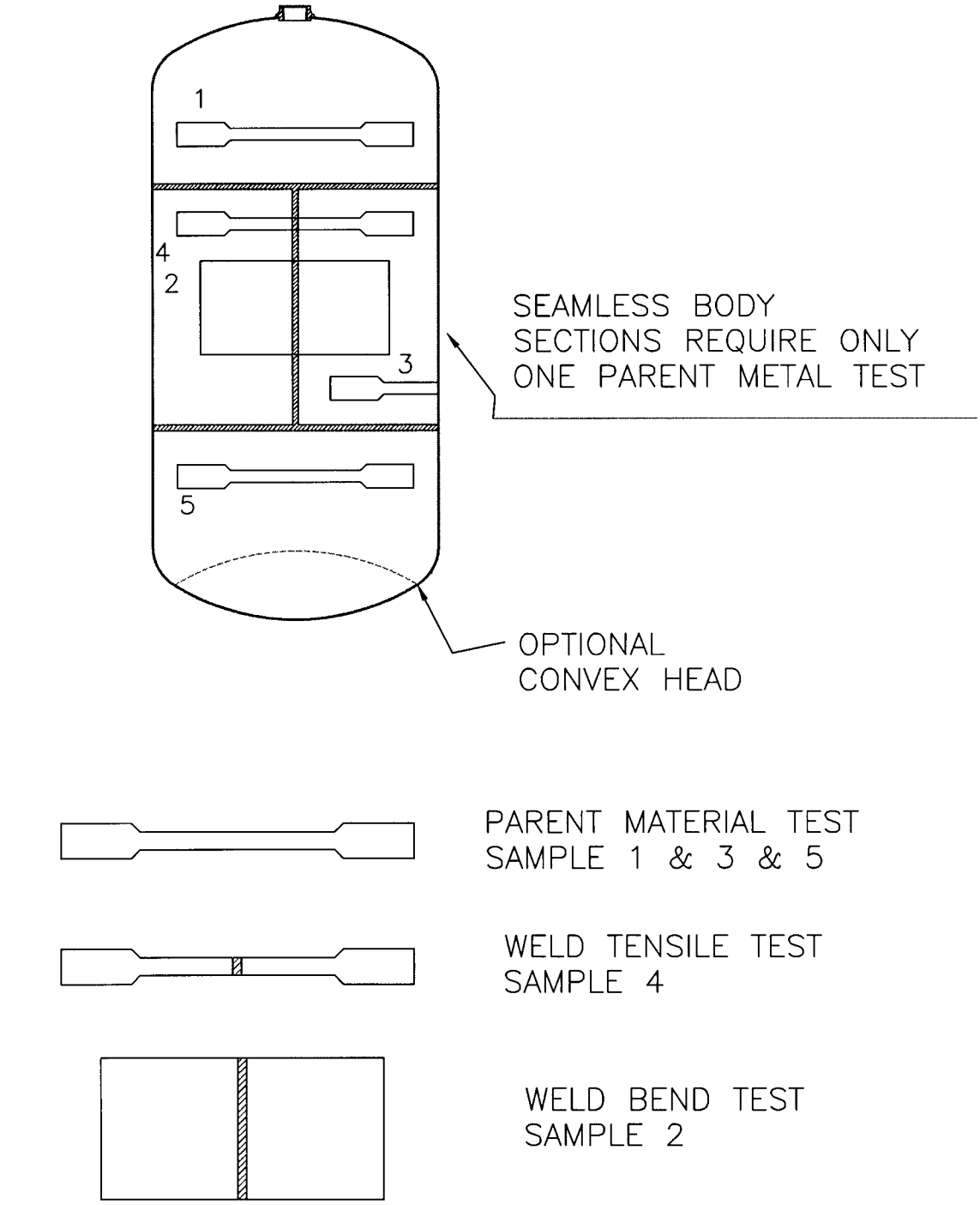

THIS FIGURE ILLUSTRATES THE PROPER TENSILE LOCATION FOR A 3 PIECE CYLINDER WITH THE HEADS HAVING STRAIGHT SIDEWALL.

FIGURE #1

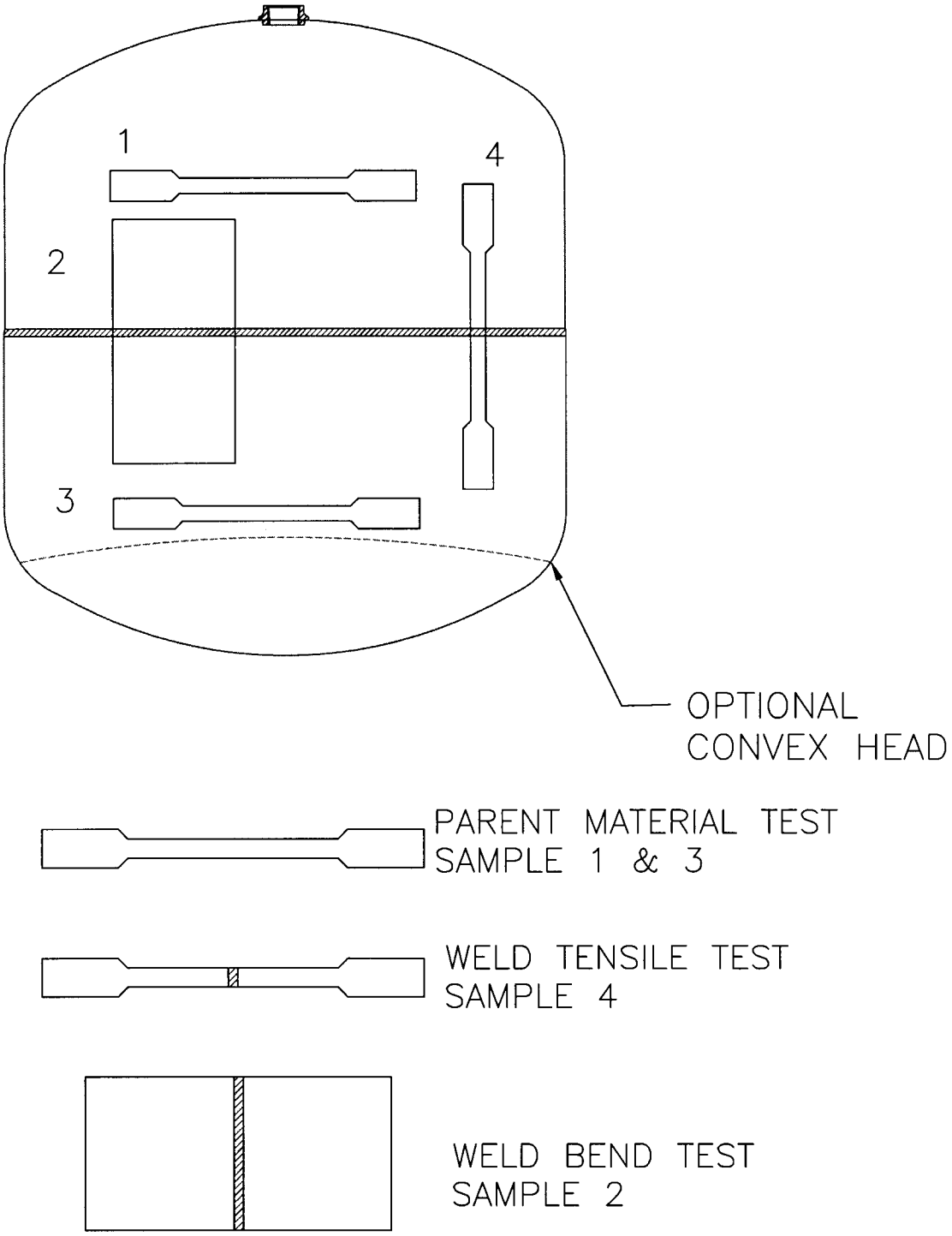

THIS FIGURE ILLUSTRATES THE PROPER TENSILE LOCATION FOR A 2 PIECE CYLINDER WITH THE HEADS HAVING STRAIGHT SIDEWALLS.

FIGURE #2

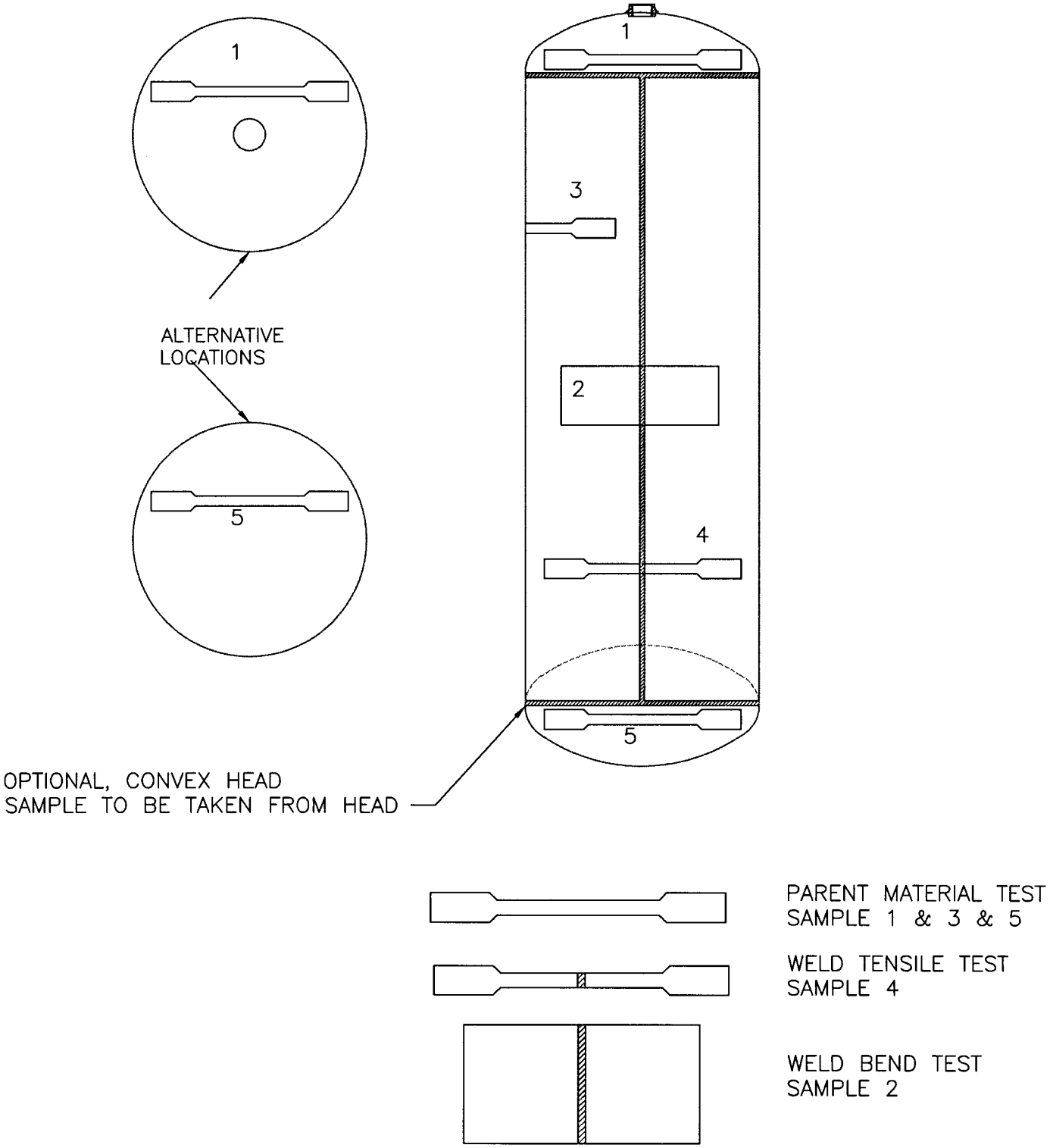

THIS FIGURE ILLUSTRATES THE PROPER TENSILE LOCATION FOR A 2 PIECE CYLINDER THAT HAVE DEEP DRAWN HEADS.

FIGURE #3

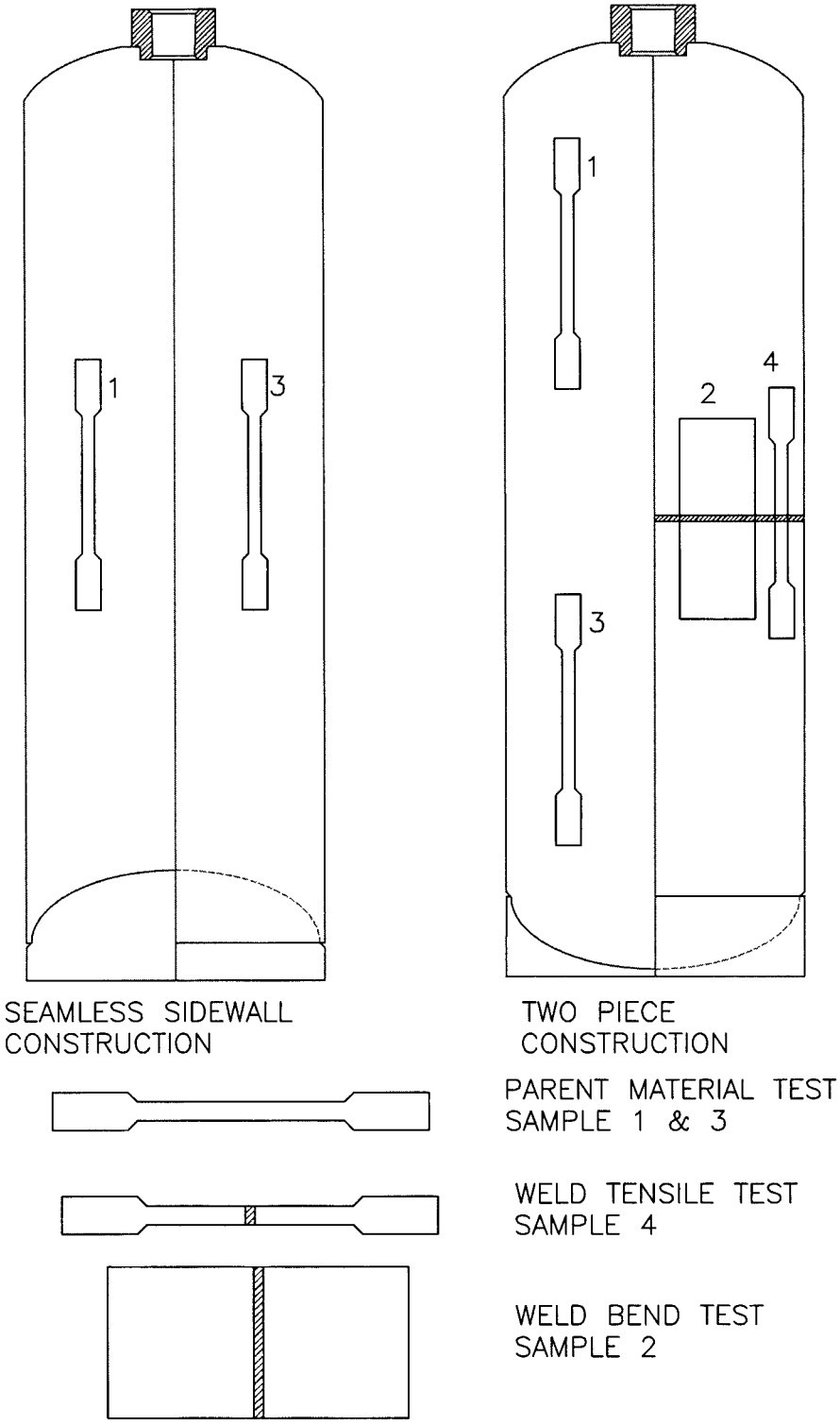

THIS FIGURE ILLUSTRATES THE PROPER TENSILE LOCATION FOR A 2 PIECE CYLINDER THAT HAVE DEEP DRAWN HEADS.

FIGURE #4

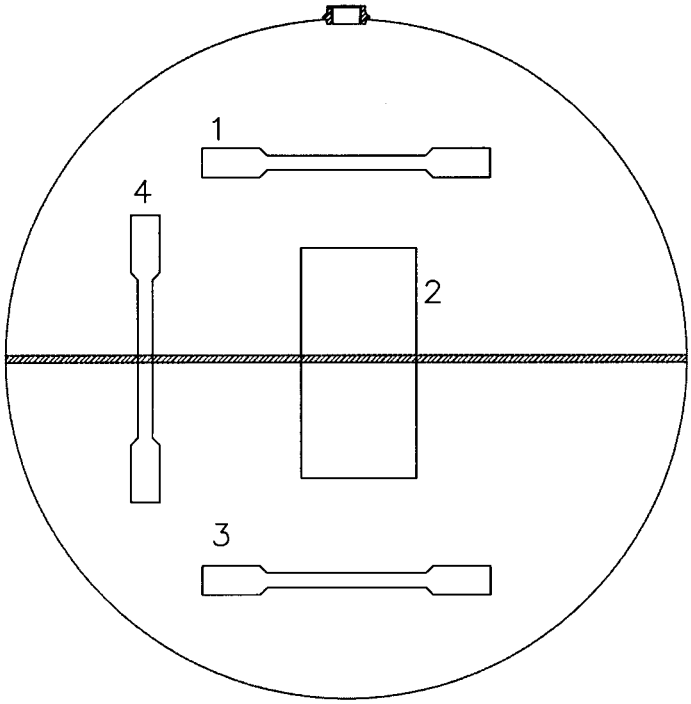

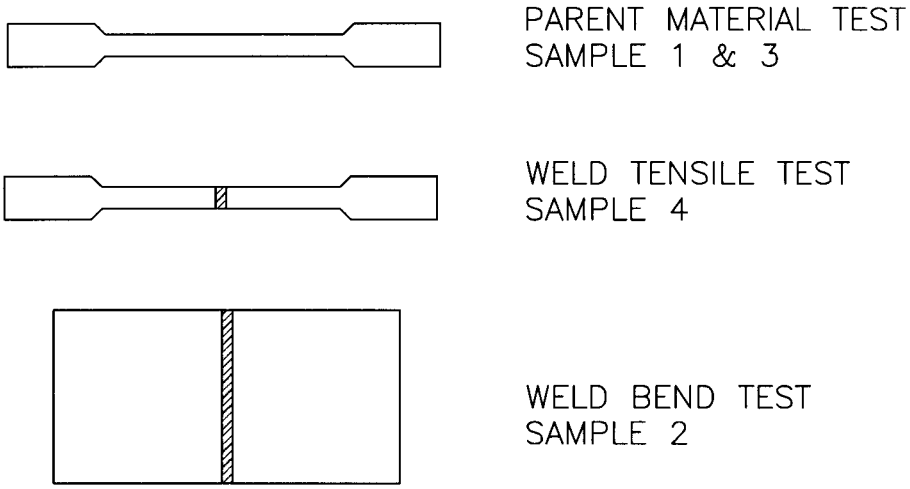

THIS FIGURE ILLUSTRATES THE PROPER TENSILE LOCATION FOR A 2 PIECE CYLINDER.

FIGURE #5

BILLING CODE 4910–60–C

§ 178.358–5 [Amended]

63. In § 178.358–5, in paragraph (c), the wording ''ASTM A–240, Type 304L'' is revised to read ''ASTM A 240/A 240M (incorporated by reference; *see* § 171.1 of this subchapter), Type 304L''.

PART 179—SPECIFICATIONS FOR TANK CARS

64. The authority citation for part 179 continues to read as follows:

Authority: 49 U.S.C. 5101–5127; 49 CFR 1.53.

§ 179.100–7 [Amended]

65. In § 179.100–7, in the table in paragraph (c)(1), the wording ''ASTM A240,'' is revised to read ''ASTM A 240/A 240M (incorporated by reference; *see* § 171.7 of this subchapter),'' each time it appears.

§ 179.100–10 [Amended]

66. In § 179.100–10, in paragraph (c), the wording ''ASTM A 240'' is revised to read ''ASTM A 240/A 240M (incorporated by reference; *see* § 171.7 of this subchapter)''.

§ 179.102–1 [Amended]

67. In § 179.102–1, in paragraph (a)(1), in the last sentence, the wording ''ASTM Specification A 240'' is revised to read ''ASTM A 240/A 240M (incorporated by reference; *see* § 171.7 of this subchapter)''.

§ 179.102–4 [Amended]

68. In § 179.102–4, in paragraph (a)(1), the wording ''ASTM Specification A240'' is revised to read ''ASTM A 240/A 240M (incorporated by reference; *see* § 171.7 of this subchapter)''.

§ 179.102–17 [Amended]

69. In § 179.102–17, in paragraph (b)(1), the wording ''ASTM Specification A240'' is revised to read ''ASTM A 240/A 240M (incorporated by reference; *see* § 171.7 of this subchapter)''.

§ 179.200–7 [Amended]

70. In § 179.200–7, in the table in paragraph (d), the wording ''ASTM A 240'' is revised to read ''ASTM A 240/A 240M (incorporated by reference; *see* § 171.7 of this subchapter)'' each time it appears.

§ 179.201–5 [Amended]

71. In § 179.201–5, the following revisions are made:

a. In paragraph (a), the wording ''ASTM Specification A 240'' is revised to read ''ASTM A 240/A 240M (incorporated by reference; *see* § 171.7 of this subchapter)'' each time it appears.

b. In paragraph (b), the wording ''ASTM Specification A 240'' is revised to read ''ASTM A 240/A 240M (incorporated by reference; *see* § 171.7 of this subchapter)''.

§ 179.220–7 [Amended]

72. In § 179.220–7, in the table in paragraph (d), the wording ''ASTM A 240,'' is revised to read ''ASTM A 240/A 240M (incorporated by reference; *see* § 171.7 of this subchapter),'' each time it appears.

§ 179.400–5 [Amended]

73. In § 179.400–5, in paragraph (a) introductory text, the wording ''ASTM Specification A240,'' is revised to read ''ASTM A 240/A 240M (incorporated by reference; *see* § 171.7 of this subchapter)''.

PART 180—CONTINUING QUALIFICATION AND MAINTENANCE OF PACKAGINGS

74. The authority citation for part 180 continues to read as follows:

Authority: 49 U.S.C. 5101–5127; 49 CFR 1.53.

75. Subpart C is added to part 180 to read as follows:

Subpart C—Qualification, Maintenance and Use of Cylinders

Sec.
180.201 Applicability.
180.203 Definitions.
180.205 General requirements for requalification of cylinders.
180.207 [Reserved]
180.209 Requirements for requalification of specification cylinders.
180.211 Repair, rebuilding and reheat treatment of DOT–4 series specification cylinders.
180.213 Requalification markings.
180.215 Reporting and record retention requirements.

Subpart C—Qualification, Maintenance and Use of Cylinders

§ 180.201 Applicability.

This subpart prescribes requirements, in addition to those contained in parts 107, 171, 172, 173, and 178 of this chapter, applicable to any person responsible for the continuing qualification, maintenance, or periodic requalification of DOT specification and exemption cylinders.

§ 180.203 Definitions.

In addition to the definitions contained in § 171.8 of this subchapter, the following definitions apply to this subpart:

Commercially free of corrosive components means a hazardous material having a dew point at or below minus 46.7° C (minus 52° F) at 101kPa (1 atmosphere) and free of components that will adversely react with the cylinder (e.g. chemical stress corrosion).

Condemn means a determination that a cylinder is unserviceable for the continued transportation of hazardous materials in commerce and that the cylinder may not be restored by repair, rebuilding, requalification, or any other procedure.

Defect means an imperfection requiring removal of a cylinder from service.

Elastic expansion means a temporary increase in a cylinder's volume, due to application of pressure, that is lost when pressure is released (elastic expansion = total expansion minus permanent expansion).

Filled or *charged* means an introduction or presence of a hazardous material in a cylinder.

Non-corrosive service means a hazardous material that, in the presence of moisture, is not corrosive to the materials of construction of a cylinder (including valve, pressure relief device, etc.).

Over-heated means a condition in which the temperature of any portion of an aluminum cylinder has reached 176° C (350° F) or higher, or in which the temperature of any portion of a steel or nickel cylinder has reached 343° C (650° F) or higher.

Permanent expansion means a permanent increase in a cylinder's volume after the test pressure is released.

Proof pressure test means a pressure test by interior pressurization without the determination of a cylinder's expansion.

Rebuild means the replacement of a pressure part (e.g. a wall, head, or pressure fitting) by welding.

Rejected cylinder means a cylinder that cannot be used for the transportation of a hazardous material in commerce without repair, rebuilding, and requalification.

Repair means a procedure for correction of a rejected cylinder that may involve welding.

Requalification means the completion of a visual inspection and/or the test(s) required to be performed on a cylinder to determine its suitability for continued service.

Requalification identification number or RIN means a code assigned by DOT to uniquely identify a cylinder requalification, repair, or rebuilding facility.

Test pressure means the pressure used for the requalification of a cylinder.

Total expansion means the total increase in a cylinder's volume due to application of the test pressure.

Visual inspection means an internal or external visual examination, or both, performed as part of the cylinder requalification process.

Volumetric expansion test means a pressure test to determine the total and permanent expansion of a cylinder at a given pressure. The *volumetric expansion test* is conducted using the water jacket or direct expansion methods:

(1) *Water jacket method* means a volumetric expansion test to determine a cylinder's total and permanent expansion by measuring the difference between the volume of water the cylinder externally displaces at test pressure and the volume of water the cylinder externally displaces at ambient pressure.

(2) *Direct expansion method* means a volumetric expansion test to calculate a cylinder's total and permanent expansion by measuring the amount of water forced into a cylinder at test pressure, adjusted for the compressibility of water, as a means of determining the expansion.

§ 180.205 General requirements for requalification of cylinders.

(a) *General.* Each cylinder used for the transportation of hazardous materials must be an authorized packaging. To qualify as an authorized packaging, each cylinder must conform to this subpart, the applicable requirements specified in part 173 of this subchapter, and the applicable requirements of subpart C of part 178 of this subchapter.

(b) *Persons performing requalification functions.* No person may represent that a repair or requalification of a cylinder has been performed in accordance with the requirements in this subchapter unless that person holds a current approval issued under the procedural requirements prescribed in subpart I of part 107 of this chapter. No person may mark a cylinder with a RIN and a requalification date or otherwise represent that a DOT specification or exemption cylinder has been requalified unless all applicable requirements of this subpart have been met. A person who requalifies cylinders must maintain the records prescribed in § 180.215 at each location at which it inspects, tests, or marks cylinders.

(c) *Periodic requalification of cylinders.* Each cylinder bearing a DOT specification marking must be requalified and marked as specified in the Requalification Table in this subpart. Each cylinder bearing a DOT exemption number must be requalified and marked in conformance with this section and the terms of the applicable exemption. No cylinder may be filled with a hazardous material and offered for transportation in commerce unless that cylinder has been successfully requalified and marked in accordance with this subpart. A cylinder may be requalified at any time during or before the month and year that the requalification is due. However, a cylinder filled before the requalification becomes due may remain in service until it is emptied. A cylinder with a specified service life may not be refilled and offered for transportation after its authorized service life has expired.

(1) Each cylinder that is requalified in accordance with the requirements specified in this section must be marked in accordance with § 180.213.

(2) Each cylinder that fails requalification must be:

(i) Rejected and may be requalified in accordance with § 180.211; or

(ii) Condemned in accordance with paragraph (i) of this section.

(3) For DOT specification cylinders, the marked service pressure may be changed upon approval of the Associate Administrator and in accordance with written procedures specified in the approval.

(4) For a DOT–3 series cylinder,at the first requalification due on and after October 1, 2002, the set pressure of a pressure relief device must be set at test pressure with a tolerance of plus zero and minus 10%.

(d) *Conditions requiring test and inspection of cylinders.* Without regard to any other periodic requalification requirements, a cylinder must be tested and inspected in accordance with this section prior to further use if—

(1) The cylinder shows evidence of dents, corrosion, cracked or abraded areas, leakage, thermal damage, or any other condition that might render it unsafe for use in transportation;

(2) The cylinder has been in an accident and has been damaged to an extent that may adversely affect its lading retention capability;

(3) The cylinder shows evidence of or is known to have been over-heated; or

(4) The Associate Administrator determines that the cylinder may be in an unsafe condition.

(e) *Cylinders containing Class 8 (corrosive) liquids.* A cylinder previously containing a Class 8 (corrosive) liquid may not be used to transport a Class 2 material in commerce unless the cylinder is—

(1) Visually inspected, internally and externally, in accordance with paragraph (f) of this section and the inspection is recorded as prescribed in § 180.215;

(2) Requalified in accordance with this section, regardless of the date of the previous requalification;

(3) Marked in accordance with § 180.213; and

(4) Decontaminated to remove all significant residue or impregnation of the Class 8 material.

(f) *Visual inspection.* Except as otherwise provided in this subpart, each time a cylinder is pressure tested, it must be given an internal and external visual inspection.

(1) The visual inspection must be performed in accordance with the following CGA Pamphlets: C–6 for steel and nickel cylinders (incorporated by reference; *see* § 171.7 of this subchapter); C–6.1 for seamless aluminum cylinders (incorporated by reference; *see* § 171.7 of this subchapter); C–6.2 for fiber reinforced composite exemption cylinders (incorporated by reference; *see* § 171.7 of this subchapter); C–6.3 for low pressure aluminum cylinders (incorporated by reference; *see* § 171.7 of this subchapter); C–8 for DOT 3HT cylinders (incorporated by reference; *see* § 171.7 of this subchapter); and C–13 for DOT 8 series cylinders (incorporated by reference; *see* § 171.7 of this subchapter).

(2) For each cylinder with a coating or attachments that would inhibit inspection of the cylinder, the coating or attachments must be removed before performing the visual inspection.

(3) Each cylinder subject to visual inspection must be approved, rejected, or condemned according to the criteria in the applicable CGA pamphlet.

(4) In addition to other requirements prescribed in this paragraph (f), a DOT specification or exemption cylinder made of aluminum alloy 6351–T6 must be inspected for evidence of sustained load cracking in the neck and shoulder area in accordance with the cylinder manufacturer's written recommendations, which must be approved in writing by the Associate Administrator.

(g) *Pressure test.* (1) Unless otherwise provided, each cylinder required to be retested under this subpart must be retested by means suitable for measuring the expansion of the cylinder under pressure. Bands and other removable attachments must be loosened or removed before testing so that the cylinder is free to expand in all directions.

(2) The pressure indicating device of the testing apparatus must permit reading of pressures to within 1% of the minimum prescribed test pressure of

each cylinder tested, except that for an analog device, interpolation to ½ of the marked gauge divisions is acceptable. The expansion-indicating device of the testing apparatus must also permit incremental reading of the cylinder expansion to 1% of the total expansion of each cylinder tested or 0.1 cm^3, whichever is larger. Midpoint visual interpolation is permitted.

(3) Each day before retesting, the retester shall confirm, by using a calibrated cylinder or other method authorized in writing by the Associate Administrator, that:

(i) The pressure-indicating device, as part of the retest apparatus, is accurate within ±1.0% of the prescribed test pressure of any cylinder tested that day. The pressure indicating device, itself, must be certified as having an accuracy of ±0.5%, or better, of its full range, and must permit readings of pressure from 90%-110% of the minimum prescribed test pressure of the cylinder to be tested. The accuracy of the pressure indicating device within the test system can be demonstrated at any point within 500 psig of the actual test pressure for test pressures at or above 3000 psig, or 10% of the actual test pressure for test pressures below 3000 psig.

(ii) The expansion-indicating device, as part of the retest apparatus, gives a stable reading of expansion and is accurate to ±1.0% of the total expansion of any cylinder tested or 0.1 cubic centimeter, whichever is larger. The expansion-indicating device itself must have an accuracy of ±0.5%, or better, of its full scale.

(4) The test equipment must be verified to be accurate within ±1.0% of the calibrated cylinder's pressure and corresponding expansion values. This may be accomplished by bringing the pressure to a value shown on the calibration certificate for the calibrated cylinder used and verifying that the resulting total expansion is within ±1.0% of the total expansion shown on the calibration certificate. Alternatively, calibration may be demonstrated by bringing the total expansion to a known value on the calibration certificate for the calibrated cylinder used and verifying that the resulting pressure is within ±1.0% of the pressure shown on the calibration certificate. The calibrated cylinder must show no permanent expansion. The retester must demonstrate calibration in conformance with this paragraph (g) to an authorized inspector on any day that it retests cylinders. A retester must maintain calibrated cylinder certificates in conformance with § 180.215(b)(4).

(5) Minimum test pressure must be maintained for at least 30 seconds, and as long as necessary for complete expansion of the cylinder. A system check may be performed at or below 90% of test pressure prior to the retest. In the case of a malfunction of the test equipment, the test may be repeated at a pressure increased by 10% or 100 psig, whichever is less. This paragraph (g) does not authorize retest of a cylinder otherwise required to be condemned under paragraph (i) of this section.

(h) *Cylinder rejection.* A cylinder must be rejected when, after a visual inspection, it meets a condition for rejection under the visual inspection requirements of paragraph (f) of this section.

(1) Except as provided in paragraphs (h)(3) and (h)(4) of this section, a cylinder that is rejected may not be marked as meeting the requirements of this section.

(2) The requalifier must notify the cylinder owner, in writing, that the cylinder has been rejected.

(3) Unless the cylinder is requalified in conformance with requirements in § 180.211, it may not be filled with a hazardous material and offered for transportation in commerce where use of a specification packaging is required.

(4) A rejected cylinder with a service pressure of less than 900 psig may be requalified and marked if the cylinder is repaired or rebuilt and subsequently inspected and tested in conformance with—

(i) The visual inspection requirements of paragraph (f) of this section;

(ii) Part 178 of this subchapter and this part;

(iii) Any exemption covering the manufacture, requalification, and/or use of that cylinder; and

(iv) Any approval required under § 180.211.

(i) *Cylinder condemnation.* (1) A cylinder must be condemned when—

(i) The cylinder meets a condition for condemnation under the visual inspection requirements of paragraph (f) of this section.

(ii) The cylinder leaks through its wall.

(iii) Evidence of cracking exists to the extent that the cylinder is likely to be weakened appreciably.

(iv) For a DOT specification cylinder, other than a DOT 4E aluminum cylinder or an exemption cylinder, permanent expansion exceeds 10 percent of total expansion.

(v) For a DOT 3HT cylinder—

(A) The pressure test yields an elastic expansion exceeding the marked rejection elastic expansion (REE) value.

(B) The cylinder shows evidence of denting or bulging.

(C) The cylinder bears a manufacture or an original test date older than twenty-four years or after 4380 pressurizations, whichever occurs first. If a cylinder is refilled, on average, more than once every other day, an accurate record of the number of rechargings must be maintained by the cylinder owner or the owner's agent.

(vi) For a DOT 4E aluminum cylinder, permanent expansion exceeds 12 percent of total expansion.

(vii) For a DOT exemption cylinder, permanent expansion exceeds the limit in the applicable exemption, or the cylinder meets another criterion for condemnation in the applicable exemption.

(viii) For an aluminum or an aluminum-lined composite exemption cylinder, the cylinder is known to have been or shows evidence of having been over-heated.

(2) When a cylinder must be condemned, the requalifier must stamp a series of X's over the DOT specification number and the marked pressure or stamp ''CONDEMNED'' on the shoulder, top head, or neck using a steel stamp. Alternatively, at the direction of the owner, the requalifier may render the cylinder incapable of holding pressure. In addition, the requalifier must notify the cylinder owner, in writing, that the cylinder is condemned and may not be filled with hazardous material and offered for transportation in commerce where use of a specification packaging is required.

(3) No person may remove or obliterate the ''CONDEMNED'' marking.

§ 180.207 [Reserved]

§ 180.209 Requirements for requalification of specification cylinders.

(a) *Periodic qualification of cylinders.* (1) Each specification cylinder that becomes due for periodic requalification, as specified in the following table, must be requalified and marked in conformance with the requirements of this subpart. Requalification records must be maintained in accordance with § 180.215. Table 1 follows:

TABLE 1.—REQUALIFICATION OF CYLINDERS [1]

Specification under which cylinder was made	Minimum test pressure (psig) [2]	Test period (years)
DOT 3	3000 psig	5
DOT 3A, 3AA	5/3 times service pressure, except noncorrosive service (*see* § 180.209(g)).	5, 10, or 12 (*see* § 180.209(b), (f), (h), and (j)
DOT 3AL	5/3 times service pressure	5 or 12 (*see* § 180.209(j))
DOT 3AX, 3AAX	5/3 times service pressure	5
3B, 3BN	2 times service pressure (*see* § 180.209(g))	5 or 10 (see § 180.209(f))
3E	Test not required.	
3HT	5/3 times service pressure	3 (*see* §§ 180.209(i) and 180.213(c))
3T	5/3 times service pressure	5
4AA480	2 times service pressure (*see* § 180.209(g))	5 or 10 (*see* § 180.209(e)(14)
4B, 4BA, 4BW, 4B–240ET	2 times service pressure, except non-corrosive service (*see* § 180.209(g)).	5, 10, or 12 (*see* § 180.209(e), (f), and (j))
4D, 4DA, 4DS	2 times service	5
DOT 4E	2 times service pressure, except non-corrosive (*see* § 180.209(g)).	5
4L	Test not required.	
8, 8AL		10 or 20 (*see* § 180.209(i))
Exemption cylinder	See current exemption	*See* current exemption
Foreign cylinder (see § 173.301(j) of this subchapter for restrictions on use).	As marked on cylinder, but not less than 5/3 of any service or working pressure marking.	5 (*see* §§ 180.209(k) and 180.213(d)(iii))

[1] Any cylinder not exceeding 2 inches outside diameter and less than 2 feet in length is excepted from volumetric expansion test.
[2] For cylinders not marked with a service pressure, see § 173.301(e)(1) of this subchapter.

(b) *DOT 3A or 3AA cylinders.* (1) A cylinder conforming to specification DOT 3A or 3AA with a water capacity of 56.7 kg (125 lb) or less that is removed from any cluster, bank, group, rack, or vehicle each time it is filled, may be requalified every ten years instead of every five years, provided the cylinder conforms to all of the following conditions:

(i) The cylinder was manufactured after December 31, 1945.

(ii) The cylinder is used exclusively for air; argon; cyclopropane; ethylene; helium; hydrogen; krypton; neon; nitrogen; nitrous oxide; oxygen; sulfur hexafluoride; xenon; fluorinated hydrocarbons, liquefied hydrocarbons, and mixtures thereof that are commercially free from corroding components; permitted mixtures of these gases (*see* § 173.301(d) of this subchapter); and permitted mixtures of these gases with up to 30 percent by volume of carbon dioxide, provided the gas has a dew point at or below minus (52° F) at 1 atmosphere.

(iii) Before each refill, the cylinder is removed from any cluster, bank, group, rack or vehicle and passes the hammer test specified in CGA Pamphlet C–6 (incorporated by reference; *see* § 171.7 of this subchapter).

(iv) The cylinder is dried immediately after hydrostatic testing to remove all traces of water.

(v) The cylinder is not used for underwater breathing.

(vi) Each cylinder is stamped with a five-pointed star at least one-fourth of an inch high immediately following the test date.

(2) If, since the last required requalification, a cylinder has not been used exclusively for the gases specifically identified in paragraph (b)(1)(ii) of this section, but currently conforms with all other provisions of paragraph (b)(1) of this section, it may be requalified every 10 years instead of every five years, provided it is first requalified and examined as prescribed by § 173.302a(b) (2), (3) and (4) of this subchapter.

(3) Except as specified in paragraph (b)(2) of this section, if a cylinder, marked with a star, is filled with a compressed gas other than as specified in paragraph (b)(1)(ii) of this section, the star following the most recent test date must be obliterated. The cylinder must be requalified five years from the marked test date, or prior to the first filling with a compressed gas, if the required five-year requalification period has passed.

(c) *DOT 4-series cylinders.* A DOT 4-series cylinder, except a 4L cylinder, that at any time shows evidence of a leak or of internal or external corrosion, denting, bulging or rough usage to the extent that it is likely to be weakened appreciably, or that has lost five percent or more of its official tare weight must be requalified before being refilled and offered for transportation. (Refer to CGA Pamphlet C–6 or C–6.3, as applicable, regarding cylinder weakening.) After testing, the actual tare weight must be recorded as the new tare weight.

(d) *Cylinders 5.44 kg (12 lb) or less with service pressures of 300 psig or less.* A cylinder of 5.44 (12 lb) or less water capacity authorized for service pressure of 300 psig or less must be given a complete external visual inspection at the time periodic requalification becomes due. External visual inspection must be in accordance with CGA Pamphlet C–6 or C–6.1 (incorporated by reference; see § 171.7 of this subchapter). The cylinder may be proof pressure tested. The test is successful if the cylinder, when examined under test pressure, does not display a defect described in § 180.205(i)(1) (ii) or (iii). Upon successful completion of the test and inspection, the cylinder must be marked in accordance with § 180.213.

(e) *Proof pressure test.* A cylinder made in conformance with specifications DOT 4B, 4BA, 4BW, or 4E used exclusively for: liquefied petroleum gas that meets the requirements in Table I of ASTM D 1835, Standard Specification for Liquefied Petroleum (LP) Gases (incorporated by reference; *see* § 171.7 of this subchapter); anhydrous dimethylamine; anhydrous methylamine; anhydrous trimethylamine; methyl chloride; methylacetylene-propadiene stabilized; or dichlorodifluoromethane, difluoroethane, difluorochloroethane, chlorodifluoromethane, chlorotetrafluoroethane, trifluorochloroethylene, or mixture thereof, or mixtures of one or more with trichlorofluoromethane; and commercially free from corroding components and protected externally by a suitable corrosion-resistant coating (such as galvanizing or painting) may be requalified by volumetric expansion

testing every 12 years instead of every five years. As an alternative, the cylinder may be subjected to a proof pressure test at least two times the marked service pressure, but this latter type of test must be repeated every seven years after expiration of the first 12-year period. When subjected to a proof pressure test, the cylinder must be carefully examined under test pressure and removed from service if a leak or defect is found.

(f) *Poisonous materials.* A cylinder conforming to specification DOT 3A, 3AA, 3B, 4BA, or 4BW having a service pressure of 300 psig or less and used exclusively for methyl bromide, liquid; mixtures of methyl bromide and ethylene dibromide, liquid; mixtures of methyl bromide and chlorpicrin, liquid; mixtures of methyl bromide and petroleum solvents, liquid; or methyl bromide and nonflammable, nonliquefied compressed gas mixtures, liquid; commercially free of corroding components, and protected externally by a suitable corrosion resistant coating (such as galvanizing or painting) and internally by a suitable corrosion resistant lining (such as galvanizing) may be tested every 10 years instead of every five years, provided a visual internal and external examination of the cylinder is conducted every five years in accordance with CGA Pamphlet C–6 (incorporated by reference; *see* § 171.7 of this subchapter). The cylinder must be examined at each filling, and rejected if a dent, corroded area, leak or other condition indicates possible weakness.

(g) *Visual inspections.* A cylinder conforming to a specification listed in the table in this paragraph and used exclusively in the service indicated may, instead of a periodic hydrostatic test, be given a complete external visual inspection at the time periodic requalification becomes due. External visual inspection must be in accordance with CGA Pamphlet C–6 or C–6.3, as applicable (incorporated by reference; *see* § 171.7 of this subchapter). When this inspection is used instead of hydrostatic pressure testing, subsequent inspections are required at five-year intervals after the first inspection. After September 30, 2003, inspections must be made only by persons holding a current RIN and the results recorded and maintained in accordance with § 180.215. Records must include: date of inspection (month and year); DOT specification number; cylinder identification (registered symbol and serial number, date of manufacture, and owner); type of cylinder protective coating (including statement as to need of refinishing or recoating); conditions checked (*e.g.,* leakage, corrosion, gouges, dents or digs in shell or heads, broken or damaged footring or protective ring or fire damage); disposition of cylinder (returned to service, returned to cylinder manufacturer for repairs or condemned). A cylinder passing requalification by the external visual inspection must be marked in accordance with § 180.213. Specification cylinders must be in exclusive service as shown in the following table:

Cylinders conforming to—	Used exclusively for—
DOT 3A, DOT 3AA, DOT 3A480X, DOT 4AA480	Anhydrous ammonia of at least 99.95% purity.
DOT 3A, DOT 3AA, DOT 3A480X, DOT 3B, DOT 4B, DOT 4BA, DOT 4BW.	Butadiene, inhibited, that is commercially free from corroding components.
DOT 3A, DOT 3A480X, DOT 3AA, DOT 3B, DOT 4AA480, DOT 4B, DOT 4BA, DOT 4BW.	Cyclopropane that is commercially free from corroding components.
DOT 3A, DOT 3AA, DOT 3A480X, DOT 4B, DOT 4BA, DOT 4BW, DOT 4E.	Fluorinated hydrocarbons and mixtures thereof that are commercially free from corroding components.
DOT 3A, DOT 3AA, DOT 3A480X, DOT 3B, DOT 4B, DOT 4BA, DOT 4BW, DOT 4E.	Liquefied hydrocarbon gas that is commercially free from corroding components.
DOT 3A, DOT 3AA, DOT 3A480X, DOT 3B, DOT 4B, DOT 4BA, DOT 4BW, DOT 4E.	Liquefied petroleum gas that meets the requirements in Table I of ASTM D 1835, Standard Specification for Liquefied Petroleum (LP) Gases (incorporated by reference; see § 171.7 of this subchapter).
DOT 3A, DOT 3AA, DOT 3B, DOT 4B, DOT 4BA, DOT 4BW, DOT 4E	Methylacetylene-propadiene, stabilized, that is commercially free from corroding components.
DOT 3A, DOT 3AA, DOT 3B, DOT 4B, DOT 4BA, DOT 4BW	Anhydrous mono, di,trimethylamines that are commercially free from corroding components.
DOT 4B240, DOT 4BW240	Ethyleneimine, inhibited.

(h) *Cylinders containing anhydrous ammonia.* A cylinder conforming to specification DOT 3A, 3A480X, or 4AA480 used exclusively for anhydrous ammonia, commercially free from corroding components, and protected externally by a suitable corrosion-resistant coating (such as paint) may be requalified every 10 years instead of every five years.

(i) *Requalification of DOT–8 series cylinders.* (1) Each owner of a DOT–8 series cylinder used to transport acetylene must have the cylinder shell and the porous filler requalified in accordance with CGA Pamphlet C–13 (incorporated by reference; *see* § 171.7 of this subchapter). Requalification must be performed in accordance with the following schedule:

Date of cylinder manufacture	Shell (visual inspection) requalification		Porous filler requalification	
	Initial	Subsequent	Initial	Subsequent
Before January 1, 1991	Before January 1, 2001	10 years	Before January 1, 2011	Not required.
On or after January 1, 1991.	10 years [1]	10 years	3 to 20 years [2]	Not required.

[1] Years from date of cylinder manufacture.

[2] For a cylinder manufactured on or after January 1, 1991, requalification of the porous filler must be performed no sooner than 3 years, and no later than 20 years, from the date of manufacture.

(2) Unless requalified and marked in accordance with CGA Pamphlet C–13 (incorporated by reference; *see* § 171.7 of this subchapter) before October 1, 1994, an acetylene cylinder must be requalified by a person who holds a current RIN.

(3) If a cylinder valve is replaced, a cylinder valve of the same weight must be used or the tare weight of the cylinder must be adjusted to compensate for valve weight differential.

(4) The person performing a visual inspection or requalification must record the results as specified in § 180.215.

(5) The person performing a visual inspection or requalification must mark the cylinder as specified in § 180.213.

(j) *Cylinder used as a fire extinguisher.* Only a DOT specification cylinder used as a fire extinguisher and meeting Special Provision 18 in § 172.102(c)(1) of this subchapter may be requalified in accordance with this paragraph (j).

(1) A DOT 4B, 4BA, 4B240ET or 4BW cylinder may be tested as follows:

(i) For a cylinder with a water capacity of 5.44 kg (12 lb) or less, by volumetric expansion test using the water jacket method or by proof pressure test. A requalification must be performed by the end of 12 years after the original test date and at 12-year intervals thereafter.

(ii) For a cylinder having a water capacity over 5.44 kg (12 lb)—

(A) *By proof pressure test.* A requalification must be performed by the end of 12 years after the original test date and at 7-year intervals; or

(B) *By volumetric expansion test using the water jacket method.* A requalification must be performed 12 years after the original test date and at 12-year intervals thereafter.

(2) A DOT 3A, 3AA, or 3AL cylinder must be requalified by volumetric expansion test using the water jacket method. A requalification must be performed 12 years after the original test date and at 12-year intervals thereafter.

(k) *Requalification of foreign cylinders filled for export.* A cylinder manufactured outside the United States, other than as provided in § 171.12a of this subchapter, that has not been manufactured, inspected, tested and marked in accordance with part 178 of this subchapter may be filled with compressed gas in the United States, and shipped solely for export if it meets the following requirements, in addition to other requirements of this subchapter:

(1) It has been inspected, tested and marked (with only the month and year of test) in conformance with the procedures and requirements of this subpart or the Associate Administrator has authorized the filling company to fill foreign cylinders under an alternative method of qualification; and

(2) It is offered for transportation in conformance with the requirements of § 173.301(l) of this subchapter.

§ 180.211 Repair, rebuilding and reheat treatment of DOT–4 series specification cylinders.

(a) *General requirements for repair and rebuilding.* Any repair or rebuilding of a DOT 4-series cylinder must be performed by a person holding an approval as specified in § 107.805 of this chapter. A person performing a rebuild function is considered a manufacturer subject to the requirements of § 178.2(a)(2) and subpart C of part 178 of this subchapter. The person performing a repair, rebuild, or reheat treatment must record the test results as specified in § 180.215. Each cylinder that is successfully repaired or rebuilt must be marked in accordance with § 180.213.

(b) *General repair requirements.* Each repair of a DOT 4-series cylinder must be made in accordance with the following conditions:

(1) The repair and the inspection of the work performed must be made in accordance with the requirements of the cylinder specification.

(2) The person performing the repair must use the procedure, equipment, and filler metal or brazing material as authorized by the approval issued under § 107.805 of this chapter.

(3) Welding and brazing must be performed on an area free from contaminants.

(4) A weld defect, such as porosity in a pressure retaining seam, must be completely removed before re-welding. Puddling may be used to remove a weld defect only by the tungsten inert gas shielded arc process.

(5) After removal of a non-pressure attachment and before its replacement, the cylinder must be given a visual inspection in accordance with § 180.205(f).

(6) Reheat treatment of DOT 4B, 4BA or 4BW specification cylinders after replacement of non-pressure attachments is not required when the total weld material does not exceed 20.3 cm (8 inches). Individual welds must be at least 7.6 cm (3 inches) apart.

(7) After repair of a DOT 4B, 4BA or 4BW cylinder, the weld area must be leak tested at the service pressure of the cylinder.

(8) Repair of weld defects must be free of cracks.

(9) When a non-pressure attachment with the original cylinder specification markings is replaced, all markings must be transferred to the attachment on the repaired cylinder.

(10) Walls, heads or bottoms of cylinders with defects or leaks in base metal may not be repaired, but may be replaced as provided for in paragraph (d) of this section.

(c) *Additional repair requirements for 4L cylinders.* (1) Repairs to a DOT 4L cylinder must be performed in accordance with paragraphs (a) and (b) of this section and are limited to the following:

(i) The removal of either end of the insulation jacket to permit access to the cylinder, piping system, or neck tube.

(ii) The replacement of the neck tube. At least a 13 mm (0.51 inch) piece of the original neck tube must be protruding above the cylinder's top end. The original weld attaching the neck tube to the cylinder must be sound and the replacement neck tube must be welded to this remaining piece of the original neck tube.

(iii) The replacement of material such as, but not limited to, the insulating material and the piping system within the insulation space is authorized. The replacement material must be equivalent to that used at the time of original manufacture.

(iv) Other welding procedures that are permitted by CGA Pamphlet C–3 (incorporated by reference; *see* § 171.7 of this subchapter), and not excluded by the definition of ''rebuild,'' are authorized.

(2) After repair, the cylinder must be—

(i) Pressure tested in accordance with the specifications under which the cylinder was originally manufactured;

(ii) Leak tested before and after assembly of the insulation jacket using a mass spectrometer detection system; and

(iii) Tested for heat conductivity requirements.

(d) *General rebuilding requirements.* (1) The rebuilding of a DOT 4-series cylinder must be made in accordance with the following requirements:

(i) The person rebuilding the cylinder must use the procedures and equipment as authorized by the approval issued under § 107.805 of this chapter.

(ii) After removal of a non-pressure component and before replacement of any non-pressure component, the cylinder must be visually inspected in accordance with CGA Pamphlet C–6 (incorporated by reference; *see* § 171.7 of this subchapter).

(iii) The rebuilder may rebuild a DOT 4B, 4BA or 4BW cylinder having a water capacity of 9.07 kg (20 lb) or greater by replacing a head of the cylinder using a

circumferential joint. When this weld joint is located at other than an original welded joint, a notation of this modification must be shown on the Manufacturer's Report of Rebuilding in § 180.215(d)(2). The weld joint must be on the cylindrical section of the cylinder.

(iv) Any welding and the inspection of the rebuilt cylinder must be in accordance with the requirements of the applicable cylinder specification and the following requirements:

(A) Rebuilding of any cylinder involving a joint subject to internal pressure may only be performed by fusion welding;

(B) Welding must be performed on an area free from contaminants; and

(C) A weld defect, such as porosity in a pressure retaining seam, must be completely removed before re-welding. Puddling may be used to remove a weld defect only by using the tungsten inert gas shielded arc process.

(2) Any rebuilt cylinder must be—

(i) Heat treated in accordance with paragraph (f) of this section;

(ii) Subjected to a volumetric expansion test on each cylinder. The results of the tests must conform to the applicable cylinder specification;

(iii) Inspected and have test data reviewed to determine conformance with the applicable cylinder specification; and

(iv) Made of material conforming to the specification. Determination of conformance shall include chemical analysis, verification, inspection and tensile testing of the replaced part. Tensile tests must be performed on the replaced part after heat treatment by lots defined in the applicable specification.

(3) For each rebuilt cylinder, an inspector's report must be prepared to include the information listed in § 180.215(d).

(4) Rebuilding a cylinder with brazed seams is prohibited.

(5) When an end with the original cylinder specification markings is replaced, all markings must be transferred to the rebuilt cylinder.

(e) *Additional rebuilding requirements for DOT 4L cylinders.* (1) The rebuilding of a DOT 4L cylinder must be performed in accordance with paragraph (d) of this section. Rebuilding of a DOT 4L cylinder is:

(i) Substituting or adding material in the insulation space not identical to that used in the original manufacture of that cylinder;

(ii) Making a weld repair not to exceed 150 mm (5.9 inches) in length on the longitudinal seam of the cylinder or 300 mm (11.8 inches) in length on a circumferential weld joint of the cylinder; or

(iii) Replacing the outer jacket.

(2) Reheat treatment of cylinders is prohibited.

(3) After rebuilding, each inner containment vessel must be proof pressure tested at 2 times its service pressure. Each completed assembly must be leak-tested using a mass spectrometer detection system.

(f) *Reheat treatment.* (1) Prior to reheat treatment, each cylinder must be given a visual inspection, internally and externally, in accordance with § 180.205(f).

(2) Cylinders must be segregated in lots for reheat treatment. The reheat treatment and visual inspection must be performed in accordance with the specification for the cylinders except as provided in paragraph (f)(4) of this section.

(3) After reheat treatment, each cylinder in the lot must be subjected to a volumetric expansion test and meet the acceptance criteria in the applicable specification or be scrapped.

(4) After all welding and heat treatment, a test of the new weld must be performed as required by the original specification. The test results must be recorded in accordance with § 180.215.

§ 180.213 Requalification markings.

(a) *General.* Each cylinder requalified in accordance with this subpart with acceptable results must be marked as specified in this section. Required specification markings may not be altered or removed.

(b) *Placement of markings.* Each cylinder must be plainly and permanently marked on the metal of the cylinder as permitted by the applicable specification. Unless authorized by the cylinder specification, marking on the cylinder sidewall is prohibited.

(1) Requalification and required specification markings must be legible so as to be readily visible at all times. Illegible specification markings may be remarked on the cylinder as provided by the original specification. Requalification markings may be placed on any portion of the upper end of the cylinder excluding the sidewall, as provided in this section. Requalification and required specification markings that are illegible may be reproduced on a metal plate and attached as provided by the original specification.

(2) Previous requalification markings may not be obliterated, except that, when the space originally provided for requalification dates becomes filled, additional dates may be added as follows:

(i) All preceding requalification dates may be removed by peening provided that—

(A) Permission is obtained from the cylinder owner;

(B) The minimum wall thickness is maintained in accordance with manufacturing specifications for the cylinder; and

(C) The original manufacturing test date is not removed.

(ii) When the cylinder is fitted with a footring, additional dates may be marked on the external surface of the footring.

(c) *Requalification marking method.* The depth of requalification markings may not be greater than specified in the applicable specification. The markings must be made by stamping, engraving, scribing or other method that produces a legible, durable mark.

(1) A cylinder used as a fire extinguisher (§ 180.209(j)) may be marked by using a pressure sensitive label.

(2) For a DOT 3HT cylinder, the test date and RIN must be applied by low-stress steel stamps to a depth no greater than that prescribed at the time of manufacture. Stamping on the sidewall is not authorized.

(d) *Requalification markings.* Each cylinder that has successfully passed requalification must be marked with the RIN set in a square pattern, between the month and year of the requalification date. The first character of the RIN must appear in the upper left corner of the square pattern; the second in the upper right; the third in the lower right, and the fourth in the lower left. Example: A cylinder requalified in September 1998, and approved by a person who has been issued RIN ''A123'', would be marked plainly and permanently into the metal of the cylinder in accordance with location requirements of the cylinder specification or on a metal plate permanently secured to the cylinder in accordance with paragraph (b) of this section. An example of the markings prescribed in this paragraph (d) is as follows:

$$9 \quad \begin{matrix} A1 \\ 32 \end{matrix} \quad 98 \times$$

Where:

''9'' is the month of requalification,
''A123'' is the RIN,
''98'' is the year of requalification, and
''X'' represents the symbols described in paragraphs (f)(2) through (f)(7) of this section.

(1) Upon a written request, variation from the marking requirement may be approved by the Associate Administrator.

(2) *Exception.* A cylinder subject to the requirements of § 173.301(l) of this

subchapter may not be marked with a RIN.

(e) *Size of markings.* The size of the markings must be at least 6.35 mm (¼ in.) high, except RIN characters must be at least 3.18 mm (⅛ in.) high.

(f) *Marking illustrations.* Examples of required requalification markings for DOT specification and exemption cylinders are illustrated as follows:

(1) For designation of the 5-year volumetric expansion test, 10-year volumetric expansion test for cylinders conforming to § 180.209(f) and (h), or 12-year volumetric expansion test for fire extinguishers conforming to § 173.309(b) of this subchapter and cylinders conforming to § 180.209(e) and § 180.209(g), the marking is as illustrated in paragraph (d) of this section.

(2) For designation of the 10-year volumetric expansion test for cylinders conforming to § 180.209(b), the marking is as illustrated in paragraph (d) of this section, except that the ''X'' is replaced with a five-point star.

(3) For designation of special filling limits up to 10% in excess of the marked service pressure for cylinders conforming to § 173.302a(b) of this subchapter, the marking is as illustrated in paragraph (d) of this section, except that the ''X'' is replaced with a plus sign ''+''.

(4) For designation of the proof pressure test, the marking is as illustrated in paragraph (d) of this section, except that the ''X'' is replaced with the letter ''S''.

(5) For designation of the 5-year external visual inspection for cylinders conforming to § 180.209(g), the marking is as illustrated in paragraph (d) of this section, except that the ''X'' is replaced with the letter ''E''.

(6) For designation of DOT 8 series cylinder shell requalification only, the marking is as illustrated in paragraph (d) of this section, except that the ''X'' is replaced with the letter ''S''.

(7) For designation of DOT 8 series cylinder shell and porous filler requalification, the marking is as illustrated in paragraph (d) of this section, except that the ''X'' is replaced with the letters ''FS''.

§ 180.215 Reporting and record retention requirements.

(a) *Facility records.* A person who requalifies, repairs or rebuilds cylinders must maintain the following records where the requalification is performed:

(1) Current RIN issuance letter;

(2) If the RIN has expired and renewal is pending, a copy of the renewal request;

(3) Copies of notifications to Associate Administrator required under § 107.805 of this chapter;

(4) Current copies of those portions of this subchapter applicable to its cylinder requalification and marking activities at that location;

(5) Current copies of all exemptions governing exemption cylinders requalified or marked by the requalifier at that location; and

(6) The information contained in each applicable CGA or ASTM standard incorporated by reference in § 171.7 of this subchapter applicable to the requalifier's activities. This information must be the same as contained in the edition incorporated by reference in § 171.7 of this subchapter.

(b) *Requalification records.* Daily records of visual inspection, pressure test, and ultrasonic examination if permitted under an exemption, as applicable, must be maintained by the person who performs the requalification until either the expiration of the requalification period or until the cylinder is again requalified, whichever occurs first. A single date may be used for each test sheet, provided each test on the sheet was conducted on that date. Ditto marks or a solid vertical line may be used to indicate repetition of the preceding entry for the following entries only: date; actual dimensions; manufacturer's name or symbol, if present; owner's name or symbol, if present; and test operator. Blank spaces may not be used to indicate repetition of a prior entry. The records must include the following information:

(1) *Pressure test records.* For each test to demonstrate calibration, the date; serial number of the calibrated cylinder; calibration test pressure; total, elastic and permanent expansions; and legible identification of test operator. The test operator must be able to demonstrate that the results of the daily calibration verification correspond to the hydrostatic tests performed on that day. The daily verification of calibration(s) may be recorded on the same sheets as, and with, test records for that date.

(2) *Pressure test and visual inspection records.* The date of requalification; serial number; DOT specification or exemption number; marked pressure; actual dimensions; manufacturer's name or symbol; owner's name or symbol, if present; result of visual inspection; actual test pressure; total, elastic and permanent expansions; percent permanent expansion; disposition, with reason for any repeated test, rejection or condemnation; and legible identification of test operator. For each cylinder marked pursuant to § 173.302a(b)(5) of this subchapter, the test sheet must indicate the method by which any average or maximum wall stress was computed. Records must be kept for all completed, as well as unsuccessful tests. The entry for a second test after a failure to hold test pressure must indicate the date of the earlier test.

(3) *Wall stress.* Calculations of average and maximum wall stress pursuant to § 173.302a(b)(3) of this subchapter, if performed.

(4) *Calibration certificates.* The most recent certificate of calibration must be maintained for each calibrated cylinder.

(c) *Repair, rebuilding or reheat treatment records.* (1) Records covering welding or brazing repairs, rebuilding or reheat treating shall be retained for a minimum of fifteen years by the approved facility.

(2) A record of rebuilding, in accordance with § 180.211(d), must be completed for each cylinder rebuilt. The record must be clear, legible, and contain the following information:

(i) Name and address of test facility, date of test report, and name of original manufacturer;

(ii) Marks stamped on cylinder to include specification number, service pressure, serial number, symbol of manufacturer, inspector's mark, and other marks, if any;

(iii) Cylinder outside diameter and length in inches;

(iv) Rebuild process (welded, brazed, type seams, *etc.*);

(v) Description of assembly and any attachments replaced (*e.g.,* neckrings, footrings);

(vi) Chemical analysis of material for the cylinder, including seat and Code No., type of analysis (ladle, check), chemical components (Carbon (C), Phosphorous (P), Sulfur (S), Silicon (Si), Manganese (Mn), Nickel (Ni), Chromium (Cr), Molybdenum (Mo), Copper (Cu), Aluminum (Al), Zinc (Zn)), material manufacturer, name of person performing the analysis, results of physical tests of material for cylinder (yield strength (psi), tensile strength (psi), elongation percentage (inches), reduction in area percentage, weld bend, tensile bend, name of inspector);

(vii) Results of proof pressure test on cylinder, including test method, test pressure, total expansion, permanent expansion, elastic expansion, percent permanent expansion (permanent expansion may not exceed ten percent (10%) of total expansion), and volumetric capacity (volumetric capacity of a rebuilt cylinder must be within ± 3% of the calculated capacity);

(viii) Each report must include the following certification statement: ''I certify that this rebuilt cylinder is

accurately represented by the data above and conforms to all of the requirements in Subchapter C of Chapter I of Title 49 of the Code of Federal Regulations.''. The certification must be signed by the rebuild technician and principal, officer, or partner of the rebuild facility.

Issued in Washington, DC, on June 19, 2002, under authority delegated in 49 CFR part 1.

Elaine E. Joost,

Acting Administrator, Research and Special Programs Administration.

[FR Doc. 02–15977 Filed 8–7–02; 8:45 am]

BILLING CODE 4910–60–P

Federal Register

Thursday,
August 8, 2002

Part III

Department of Health and Human Services

Administration for Children and Families

Request for Applications for the Office of Community Services' Fiscal Year 2002 Community Economic Development Program-Special Initiatives; Notice

DEPARTMENT OF HEALTH AND HUMAN SERVICES

Administration for Children and Families

[Program Announcement No. OCS–2002–16]

Request for Applications for the Office of Community Services' Fiscal Year 2002 Community Economic Development Program-Special Initiatives

AGENCY: Office of Community Services, Administration for Children and Families, Department of Health and Human Services (HHS).

ACTION: Announcement of availability of funds and request for competitive applications under the Office of Community Services' Community Services Block Grant—Discretionary Awards—Special Initiatives for the Community Economic Development Program (CEDP).

SUMMARY: The Administration for Children and Families (ACF), Office of Community Services (OCS), announces that competing applications will be accepted for the award of cooperative agreements pursuant to the Secretary's Community Economic Development authority under section 680 (a)(1) and (2) of the Community Services Block Grant Act of 1981, as amended, (Pub. L. 105–285). This Program Announcement contains forms and instructions for submitting an application. The awarding of cooperative agreements under this Program Announcement are subject to the availability of funds for support of these activities.

The Office of Community Services (OCS) proposes to provide funds in Fiscal Year 2002 to provide administration and management expertise (Priority Area 1) through a Community Development Corporation (CDC) with nationwide experience to share its experience in dealing with day-to-day project related issues and challenges in promoting community economic development. The organization must have documented experience on a nationwide basis.

OCS also proposes to provide funds to a private, non-profit organization with nationwide experience for the purpose of providing training and technical assistance (Priority Area 2) to strengthen the network of CDCs.

DATES: The closing time and date for submission of applications for Fiscal Year 2002 is at 4:30 PM (Eastern Time Zone) September 9, 2002. Applications received after this date will be classified as late and will not be accepted for consideration. See Part IV of this announcement for more information on submitting applications.

FOR FURTHER INFORMATION CONTACT: Mr. Ros Relaford, Technical Assistance Manager, OCS Operations Center at 1–800–281–9519 for referral to the appropriate contact person in OCS for programmatic questions or send an e-mail to: *OCS@lcgnet.com* or contact Calvin Brockington at (202) 401–5273.

For a copy of this announcement, contact: OCS Operations Center, 1815 North Fort Myer Drive, Suite 300, Arlington, Virginia 22209, 1(800) 281–9519.

In addition, the announcement is accessible on the OCS web site for reading or downloading at: *http://www.acf.dhhs.gov/programs/ocs/kits1.htm.*

The Catalog of Federal Domestic Assistance number for this program is 93.570. The title is Community Services Block Grant—Discretionary Awards—Special Initiatives.

SUPPLEMENTARY INFORMATION: This Program Announcement consists of seven parts plus attachments:

Part I: Background Information
- A. Legislative Authority
- B. Departmental Goals
- C. Form of Award
- D. Definition of Terms
- E. Eligible Applicants

Part II: Program Objectives and Requirements
- A. Duties and Responsibilities of Applicant and Grantor Agency
- B. Program Priority Areas
- C. Project Requirements
- D. Project and Budget Periods
- E. Mobilization of Resources
- F. Program Beneficiaries
- G. Number of Projects in Application
- H. Multiple Submittal
- I. Sub-awarding or Delegating Projects
- J. Funding Considerations
- K. Prohibited Activities
- L. Community Empowerment and Collaboration

Part III: The Project Description, Program Proposal Elements and Review Criteria
- A. Purpose
- B. Project Summary/Abstract
- C. Objectives and Need for Assistance
- D. Results or Benefits Expected
- E. Approach
- F. Organizational Profiles
- G. Budget and Budget Justification
- H. Evaluation Criteria

Part IV: Application Procedures
- A. Application Development/Availability of Forms
- B. Application Submission
- C. Intergovernmental Review
- D. Initial OCS Screening
- E. Consideration of Applications

Part V: Instructions for Completing Forms SF–424
- A. SF–424—Application for Federal Assistance (Attachment B)
- B. SF–424A—Budget Information—Non-Construction Programs (Attachment C)
- C. SF–424B—Assurances—Non-Construction Programs (Attachment D)

Part VI: Contents of Application and Receipt Process
- A. Contents of Application
- B. Application Format
- C. Acknowledgment of Receipt

Part VII: Post Award Information and Reporting Requirements
- A. Notification of Grant Award or Cooperative Agreement
- B. Reporting Requirements
- C. Audit Requirements
- D. Prohibitions and Requirements with Regard to Lobbying
- E. Applicable Federal Regulations

Paperwork Reduction Act of 1995 (Public Law 104–13)

Public reporting burden for this collection of information is estimated to average 10 hours per response, including the time for reviewing instructions, gathering and maintaining the data needed and reviewing the collected information.

The project description is approved under OMB control number 0970–0139 which expires 12/31/2003.

An agency may not conduct or sponsor, and a person is not required to respond to an information request from an agency unless a currently valid OMB control number is displayed.

Part I. Background Information

A. Legislative Authority

The Community Services Block Grant (CSBG) Act of 1981, as amended, (Section 680(a) (1), (2), and (4) of the Community Opportunities, Accountability, and Training and Educational Services Act of 1998), authorizes the Secretary to make grants or provide cooperative agreements to provide technical and financial assistance for economic development activities designed to address the economic needs of low-income individuals and families by creating employment and business ownership opportunities.

B. Departmental Goals

This announcement is particularly relevant to the departmental goal of strengthening the American family and promoting self-sufficiency. The Community Economic Development Program has objectives of increasing the access of low-income people to employment and business development opportunities, and improving the integration, coordination, and continuity of the various HHS (and other Federal Departments) funded services potentially available to families living in poverty. Faith-based organizations are eligible to apply for grants and cooperative agreements

under this program if they are private, non-profit organizations.

C. Form of Award

The Office of Community Services plans to support all Priority Areas of the Community Services Block Grant—Discretionary Awards—Special Initiatives through Cooperative Agreements. A Cooperative Agreement is an award instrument of financial assistance when substantial involvement is anticipated between the awarding federal office and the recipient during the performance of the contemplated project.

The Office of Community Services (OCS) and the successful applicant will function as partners sharing responsibility for the design, coordination, and implementation of the project. OCS Staff will be the Administration of Children and Families' (ACF) representatives primarily responsible for efforts under this cooperative agreement. In addition, ACF regional office staff may work closely with OCS and the applicant in planning and implementing the proposed work plan of the project. The purpose of the cooperative agreement is to ensure cooperation and coordination between OCS and the organization receiving funds.

The Office of Community Services will outline a plan of interaction with the funded organization for implementation under the cooperative agreement. The respective responsibilities of the Office of Community Services and the successful applicant will be identified and incorporated into the Cooperative Agreement during pre-award negotiations. The OCS responsibilities will not change the project requirements found in this Announcement.

The plan under the cooperative agreement will describe the general and specific responsibilities of the funded organization and the grantor. A schedule of tasks will be developed and agreed upon in addition to any special conditions relating to implementation of the project.

D. Definition of Terms

For purposes of this Program Announcement, the following definitions apply:

Beneficiaries: Low-income people (as defined in the most recent annual revision of the Poverty Income Guidelines published by DHHS) and low-income communities receive direct benefits.

Budget period: The interval of time into which a grant period of assistance is divided for budgetary and funding purposes.

Building deconstruction: The systematic disassembly of residential and commercial buildings.

Cash contributions: The recipient's cash outlay, including the outlay of money contributed to the recipient by the third parties.

Community Development Corporation (CDC): A private, non-profit corporation, governed by a board of directors consisting of residents of the community and business and civic leaders, that has as a principal purpose planning, developing, or managing low-income housing or community development projects.

Community Economic Development (CED): A process by which a community uses resources to attract capital and increase physical, commercial, and business development and job opportunities for its residents.

Cooperative Agreement: An award instrument of financial assistance when substantial involvement is anticipated between the awarding office and the recipient during performance of the contemplated project.

Distressed community: A geographic urban neighborhood or rural community of high unemployment and pervasive poverty.

Eligible applicant: A private, non-profit organization. (Also, see ''Eligible Applicants'' under Part B—Application Pre-Requisites and also Program Priority Areas under Part C.)

Empowerment Zones and Enterprise Communities (EZ/EC): Those communities designated as such by the Secretary of Agriculture or Secretary of Housing and Urban Development.

Faith-Based Non-Profit Organization: A non-profit organization that has a religious character.

Intervention: Any planned activity within a project that is intended to produce changes in the target population and/or the environment and that can be formally evaluated. For example, assistance in the preparation of a business plan and loan package are planned interventions.

Job creation: New jobs, i.e. jobs not in existence prior to the start of the project, that result from new business startups, business expansion, development of new services industries, and/or other newly-undertaken physical or commercial activities.

Job placement: Placing a person in an existing vacant job of a business, service, or commercial activity not related to new development or expansion activity.

Letter of commitment: A signed letter or agreement from a third party to the applicant that pledges financial or other support for the grant activities only subject to receiving an award of OCS grant funds.

Poverty Income Guidelines: The official poverty line defined by the Office of Management and Budget, as revised and published annually by the U.S. Department of Health and Human Services that establish the level of poverty defined as low-income for individuals and their families.

Program income: Gross income earned by the grant recipient that is directly generated by an activity supported with grant funds or earned as a result of the award.

Project period: The total time for which a project is approved for OCS support, including any approved extensions.

Self-employment: The state of an individual or individuals who engage in self-directed economic activities.

Self-sufficiency: The economic state for an individual or family where public assistance is not required to maintain a comfortable living standard.

Sub-award: An award of financial assistance in the form of money, or property in lieu of money, made under an award by a recipient to an eligible sub-recipient or by a sub-recipient to a lower tier sub-recipient. The term includes financial assistance when provided by any legal agreement, even if the agreement is called a contract, but does not include procurement of goods and services nor does it include any form of assistance which is excluded from the definition of ''award'' in 45 CFR 74.2.

(**Note:** Sub-awards do not include equity investments or loan transactions since they are promulgated under third party agreements.)

Technical assistance: A problem-solving event generally utilizing the services of a specialist. Such services may be provided on-site, by telephone, or by other communications. These services address specific problems and are intended to assist with the immediate resolution of a given problem or set of problems.

Temporary Assistance to Needy Families (TANF): Title I of the Personal Responsibility and Work Opportunity Reconciliation Act of 1996 (Pub. L. 104–193) created the TANF program which replaced the entitlement program that guaranteed public assistance to individuals in economic distress. The TANF program requires work in exchange for time-limited assistance. The law specifically repeals the Aid to Families with Dependent Children (AFDC) program, Emergency

Assistance(EA) and Job Opportunities and Basic Skills Training (JOBS) programs, and replaces them with a block grant entitlement to States under Title IV–A of the Social Security Act.

Third party: Any individual, organization, or business entity that is not the direct recipient of grant funds.

Third party in-kind contributions: The value of non-cash contributions provided by non-federal third parties which may be in the form of real property, equipment, supplies and other expendable property, and the value of goods and services directly benefitting and specifically identifiable to the project or program.

E. Eligible Applicants

An eligible applicant must be a private, non-profit organization. The organization must have significant and relevant experience working with community development corporations, foundations, financial institutions and other community-based organizations. The applicant must provide proof of its non-profit status. The non-profit agency can accomplish this by providing a copy of either the applicant's listing in the Internal Revenue Service's (IRS) most recent list of tax-exempt organizations, a copy of the currently valid IRS tax exemption certificate, or a copy of the articles of incorporation bearing the seal of the State in which the corporation or association is domiciled. Faith-based organizations meeting the requirements of section 680(a)(2) or (4) are eligible to apply.

All eligible applicants must have private, non-profit status at the time of submission of their application. In addition to non-profit status, each priority area of this program announcement has additional eligibility requirements. These requirements are identified in the narrative descriptions of each priority area found in Part C. *Applicant must submit proof of non-profit status in its application at the time of submission.* Applications that *do not* include proof of this status with their application will be disqualified.

Part II—Program Objectives and Requirements

The Office of Community Services (OCS) invites eligible applicants to submit competing grant applications for the award of two Cooperative Agreements for the Community Services Block Grant—Discretionary Awards—Special Initiatives. The Community Services Block Grant—Discretionary Awards—Special Initiatives provide funds to cover the following areas: Administrative Management and Training and Technical Assistance for Community Economic Development Program grantees.

A. Duties and Responsibilities of Applicant and Grantor Agency

The duties and responsibilities of the applicant and ACF/OCS in fulfilling the Cooperative Agreement during each phase will include the following:

The Applicant—Role and Responsibilities

The successful applicant shall be responsible for the following:

1. In collaboration with OCS, design, coordinate, and implement the project according to requirements accompanying each priority area.
2. Attend a 2–3 day meeting in Washington, D.C. to discuss and finalize the major goals and objectives of the overall project, the fiscal year work plans, and exchange and share information on strategies for achieving the goals and objectives of the project.
3. Establish subordinate objectives to guide the focus of their research based upon the needs assessed in the major objectives.
4. Participate in the annual orientation meeting for newly funded grantees of the Community Economic Development Program (CEDP).

ACF/OCS—Role and Responsibilities

The grantor agency, ACF/OCS, shall be responsible for the following:

1. Throughout the term of the Agreement, provide the time and expertise of OCS to help the applicant implement the goals and objectives of the project. Specifically, OCS will organize periodic consultations and teleconferences to review planned activities, to share information, and to promote nationwide coordination.
2. Provide to the applicant a complete listing of current CEDP grantees.
3. Organize a 2–3 day meeting in Washington, D.C. to discuss and finalize the major goals and objectives of the overall project, the fiscal year work plans, and to exchange program information, and to share information on strategies for achieving the goals and objectives of the project.
4. Throughout the term of this Agreement, review and comment on required progress reports and other relevant materials prior to their finalization.
5. Throughout the term of this Agreement, make available to the applicant program information and/or products from OCS activities that are available and relevant to the project.
6. Throughout the term of this Agreement, promote the involvement of the applicant in meetings, conferences, and other initiatives to strengthen their knowledge and resource base for providing effective assistance to OCS and CEDP grantees.
7. Host the annual orientation and training meeting for newly funded CEDP grantees.

B. Program Priority Areas

The Community Services Block Grant—Discretionary Awards—Special Initiatives has two priority areas.

Priority Area 1—Administration and Management (AM)

Is intended to provide administrative and management expertise to current Office of Community Services' CDC grantees that are experiencing problems in the implementation of urban and rural community economic development projects.

Priority Area 2—Training and Technical Assistance (UT)

Makes funds available to provide training and technical assistance to groups of community development corporations in developing or implementing projects funded under this section; its aim is to generally enhance the viability and competence of community development corporations.

This priority area also seeks to attract additional private capital into distressed communities, including empowerment zones and enterprise communities, and to build and/or expand the ability of local institutions to better serve the economic needs of local residents.

The estimated level of funding available under each area is:

1. (AM)—$ 500,000.00
2. (UT)—$ 270,000.00

C. Project Requirements

The project requirements for each priority areas are as follows:

Priority Area 1—Administration and Management

OCS believes that one of the most effective means of ensuring the successful operation of a project under the CED Program area is through the sharing among CDCs of their experiences in dealing with the day-to-day issues and challenges presented in promoting community economic development. Accordingly, OCS strongly encourages more experienced private, non-profit CDCs to share their administrative and management expertise with less experienced CDCs or with those who have encountered difficulties in implementing their work programs. In order to facilitate this, OCS will provide funds to one community development corporation to assist with

its efforts to enhance the management and operational capacities of the less experienced CDCs or those having difficulties.

An applicant in this priority area must document its experience and capability to operate on a national basis in several of the following areas:

- Business/development;
- Micro-entrepreneurship development;
- Commercial development;
- Organizational and staff development;
- Board training;
- Business management, including strategic planning and fiscal management;
- Finance, including business packaging and financial/accounting services;
- Regulatory compliance including zoning and permit compliance;
- Incubator development;
- Tax credits and bond financing; and Marketing.

Eligible applicants are private, non-profit, organizations that are community development corporations. Applicants must be able to operate on a national basis and have significant and relevant experience in working with community development corporations.

The applicant must document staff competence or the accessibility of third party resources with proven competence. If the work program in the proposal requires the significant use of third party (consultant/contractor) resources, those resources should be identified and resumes of the individuals or key organizational staff provided.

Resumes of the applicant's staff, who are to be directly involved in programmatic and administrative expertise sharing, should also be included. The applicant must document successful experience in the mobilization of resources (both cash and in-kind) from private and public sources. The applicant also must clearly state how the information learned from this project may be disseminated to other interested grantees.

OCS will share with the grantee information on other grantees seeking to benefit from such assistance. Such formal requests could also be initiated by a grantee with the concurrence of OCS. These contacts may occur on-site, by telephone, or by other methods of communication. Costs incurred in connection with participation in such activities will be borne by the recipient(s) of the OCS grant under this sub-priority area.

A grantee under this priority area will be expected to disseminate results of the project via a handbook, a progress paper, evaluation reports, general manual, or seminars/workshops.

Approximately one cooperative agreement is anticipated to be made at $500,000 under this Priority Area. The award will provide a project and budget period not to exceed 17 months.

Priority Area 2—Training and Technical Assistance

Funds will be awarded for the purpose of providing training and technical assistance to strengthen the network of CDCs.

Eligible applicants are private, non-profit organizations.

Applicant must have the ability to collect and analyze data nationally that may benefit CDCs and be able to disseminate information to all OCS-funded grantees; publish a national directory of funding sources for CDCs (public, corporate, foundation, religious); publish research papers on specific aspects of job creation by CDCs; and design and provide information on successful projects and economic niches that CDCs can target. The applicant also will be responsible for the development of instructional programs, national conferences, seminars, and other activities to assist community development corporations. An applicant in this priority area must document its experience and capability in implementing projects national in scope and have significant and relevant experiences in working with community development corporations.

Approximately one cooperative agreement is anticipated to be made for $270,000 under this Priority Area with a grant period not to exceed 17 months.

D. Project and Budget Periods

Cooperative Agreements funded under this program announcement for all Priority Areas shall have both project and budget periods of 17 months.

E. Mobilization of Resources

OCS encourages and strongly support leveraging of resources through public/private partnerships that can mobilize cash and/or third-party in-kind contributions.

F. Program Beneficiaries

Projects proposed for funding under this announcement must result in direct benefits to low-income people as defined in the most recent annual revision of the Poverty Income Guidelines published by DHHS.

Attachment A to this announcement is an excerpt from the Poverty Income Guidelines currently in effect. Annual revisions of these guidelines are normally published in the **Federal Register** in February or early March of each year. Grantees will be required to apply the most recent guidelines throughout the project period. These revised guidelines may be obtained at public libraries, Congressional offices, or by writing the Superintendent of Documents, U.S. Government Printing Office (GPO), Washington, DC 20402. Also, grantees may contact the OCS Operations Center to obtain a copy of the guidelines. No other government agency or privately defined poverty guidelines are applicable for the determination of low-income eligibility for these OCS programs.

Note, however, that low-income individuals granted lawful temporary resident status under Sections 245A or 210A of the Immigration and Nationality Act, as amended by the Immigration Reform and Control Act of 1986 (Public law 99–603), may not be eligible for direct or indirect assistance based on financial need under this program for a period of five years from the date such status was granted.

G. Number of Projects in Application

All Priority Area applications shall contain only one proposed project. Applicants that are not in compliance with this requirement will be disqualified.

H. Multiple Submittals

There is no limit to the number of applications that an applicant can submit under this announcement as long as each application contains a different project.

I. Sub-awarding or Delegating Projects

OCS does not fund projects where the role of the applicant is *primarily* to serve as a conduit for funds through the use of sub awards to other organizations. In cases where the applicant proposes to make one or more sub awards, it must retain a substantive role in the implementation and operation of the project for which funding is requested.

J. Funding Considerations

In cases where an applicant ranks high and is competitive, the following may apply:

(a) Previous performance of applicants will be considered an important determining factor in the grant decisions.

(b) Any applicant that has two or more active OCS grants may only be funded under exceptional circumstances.

(c) Pre-award site visits may be performed for the purpose of

undertaking assessments of many of these applications prior to OCS making final determinations on grant awards.

K. Prohibited Activities

OCS will not consider applications that propose the establishment of Small Business Investment Corporations or Minority Enterprise Small Business Investment Corporations.

Projects that would result in the relocation of a business from one geographic area to another with the possible displacement of employees are discouraged.

L. Community Empowerment and Collaboration

Eligible organizations including faith-based organizations are urged to submit applications.

Part III. The Project Description, Program Proposal Elements and Review Criteria

A. Purpose

The project description provides the major means by which an application is evaluated and ranked to compete with other applications for available assistance. The project description should be concise and complete and should address the activity for which Federal funds are being requested. Supporting documents should be included where they can present information clearly and succinctly. In preparing your project description, all information requested through each specific evaluation criteria should be provided. Awarding offices use this and other information in making their funding recommendations. It is important, therefore, that this information be included in the application.

B. Project Summary/Abstract

Provide a summary of the project description (one page or less) with reference to the funding request.

C. Objectives and Need for Assistance

Clearly identify the physical, economic, social, financial, instructional, and/or other problem(s) requiring a solution. The need for assistance must be demonstrated and the principal and subordinate objectives of the project must be clearly stated. Supporting documentation, such as letters of support and testimonials from concerned interests other than the applicant, may be included. Any relevant data based on planning studies should be included or referred to in the endnotes/footnotes. Incorporate demographic data and participant/beneficiary information, as needed. In developing the project description, the applicant may volunteer or be requested to provide information on the total range of projects currently being conducted and supported (or to be initiated), some of which may be outside the scope of the program announcement.

D. Results or Benefits Expected

Identify the results anticipated and the benefits to be derived. For example, describe the population to be served by the Community Services Block Grant—Discretionary Awards—Special Initiatives. Explain the ways in which the project will be used to reach your client base and how it will benefit low-income participants, including whether it may aid some participants in moving towards self-sufficiency.

E. Approach

Outline a plan of action which describes the scope and detail of how the proposed work will be accomplished. Account for all functions or activities identified in the application. Cite factors which might accelerate or decelerate the work and state your reason for taking the proposed approach rather than others. Describe any unusual features of the project such as design or technological innovations, reductions in cost or time, or extraordinary social and community involvement.

Provide quantitative monthly or quarterly projections of the accomplishments to be achieved for each function or activity in such terms as the number of people served and the number of activities accomplished. When accomplishments cannot be quantified by activity or function, list them in chronological order to show the schedule of accomplishments and their target dates.

Identify the kinds of data to be collected, maintained, and/or disseminated. Note that clearance from the U.S. Office of Management and Budget (OMB) might be needed prior to a ''collection of information'' that is ''conducted or sponsored'' by ACF. List organizations, cooperating entities, consultants, or other key individuals who will work on the project along with a short description of the nature of their effort or contribution.

F. Organizational Profiles

Provide information on the applicant organization(s) and cooperating partners such as organizational charts, financial statements, audit reports or statements from CPAs/Licensed Public Accountants, Employer Identification Numbers, names of bond carriers, contact persons and telephone numbers, child care licenses and other documentation of professional accreditation, information on compliance with Federal/State/local government standards, documentation of experience in the program area, and other pertinent information. Any non-profit organization submitting an application must submit proof of its non-profit status in its application at the time of submission. The non-profit agency can accomplish this by providing a copy of either the applicant's listing in the Internal Revenue Service's (IRS) most recent list of tax-exempt organizations, or the currently valid IRS tax exemption certificate, *or*, the articles of incorporation bearing the seal of the State in which the corporation or association is domiciled which certifies that the organization has met the state's criteria as a nonprofit organization.

G. Budget and Budget Justification

Provide a line item detail and detailed calculations for each budget object class identified on the Budget Information form. Detailed calculations must include estimation methods, quantities, unit costs, and other similar quantitative detail sufficient for the calculation to be duplicated. The detailed budget must also include a breakout by the funding sources identified in Block 15 of the SF–424.

Provide a narrative budget justification that describes how categorical costs are derived. Discuss the necessity, reasonableness, and allocability of the proposed costs.

The following guidelines are for preparing the budget and budget justification. Both Federal and non-Federal resources shall be detailed and justified in the budget and narrative justification. For purposes of preparing the budget and budget justification, ''Federal resources'' refers only to the ACF grant for which you are applying. Non-Federal resources are all other Federal and non-Federal resources. It is suggested that budget amounts and computations be presented in a columnar format: first column, object class categories; second column, Federal budget; next column(s), non-Federal budget(s), and last column, total budget. The budget justification should be a narrative.

Personnel

Description: Costs of employee salaries and wages.

Justification: Identify the project director or principal investigator, if known. For each staff person, provide the title, time commitment to the project

(in months), time commitment to the project (as a percentage or full-time equivalent), annual salary, grant salary, wage rates, etc. Do not include the costs of consultants or personnel costs of delegate agencies or of specific project(s) or businesses to be financed by the applicant.

Fringe Benefits

Description: Costs of employee fringe benefits, unless treated as part of an approved indirect cost rate.

Justification: Provide a breakdown of the amounts and percentages that comprise fringe benefit costs such as health insurance, FICA, retirement insurance, taxes, etc.

Travel

Description: Costs of project-related travel by employees of the applicant organization (does not include costs of consultant travel). Travel costs for key staff to attend ACF-sponsored workshops should be detailed in the budget.

Justification: For each trip, show the total number of traveler(s), travel destination, duration of trip, per diem, mileage allowances, if privately owned vehicles will be used, and other transportation costs and subsistence allowances.

Equipment

Description: ''Equipment'' means an article of non-expendable, tangible personal property having a useful life of more than one year and an acquisition cost which equals or exceeds the lesser of (a) the capitalization level established by the organization for the financial statement purposes, or (b) $5,000.

(**Note:** Acquisition cost means the net invoice unit price of an item of equipment, including the cost of any modifications, attachments, accessories, or auxiliary apparatus necessary to make it usable for the purpose for which it is acquired. Ancillary charges, such as taxes, duty, protective in-transit insurance, freight, and installation shall be included in, or excluded from, acquisition cost in accordance with the organization's regular written accounting practices.)

Justification: For each type of equipment requested, provide a description of the equipment, the cost per unit, the number of units, the total cost, and a plan for use on the project, as well as use or disposal of the equipment after the project ends. An applicant organization that uses its own definition of equipment should provide a copy of its policy or section of its policy which includes the equipment definition.

Supplies

Description: Costs of all tangible personal property other than that included under the Equipment category.

Justification: Specify general categories of supplies and their costs. Show computations and provide other information which supports the amount requested.

Contractual

Description: Costs of all contracts for services and goods except for those which belong under other categories such as equipment, supplies, construction, etc. Third-party evaluation contracts (if applicable) and contracts with secondary recipient organizations, including delegate agencies and specific project(s) or businesses to be financed by the applicant, should be included under this category.

Justification: All procurement transactions shall be conducted in a manner to provide, to the maximum extent practical, open and free competition. Recipients and sub-recipients, other than States that are required to use Part 92 procedures, must justify any anticipated procurement action that is expected to be awarded without competition and exceed the simplified acquisition threshold fixed at 41 U.S.C. 403(11) (currently set at $100,000.)

Recipients might be required to make available to ACF pre-award review and procurement documents, such as request for proposals or invitations for bids, independent cost estimates, etc.

Note: Whenever the applicant intends to delegate part of the project to another agency, the applicant must provide a detailed budget and budget narrative for each delegate agency, by agency title, along with the required supporting information referred to in these instructions.

Other

Description: Enter the total of all other costs. Such costs, where applicable and appropriate, may include but are not limited to insurance, food, medical and dental costs (non-contractual), professional services costs, space and equipment rentals, printing and publication, computer use, training costs such as tuition and stipends, staff development costs, and administrative costs.

Justification: Provide computations, a narrative description and a justification for each cost under this category.

Non-Federal Resources

Description: Amounts of non-Federal resources that will be used to support the project as identified in Block 15 of the SF–424.

Justification: The firm commitment of these resources must be documented and submitted with the application in order to be given credit in the review process. A detailed budget must be prepared for each funding source.

H. Evaluation Criteria

Proposal Elements and Review Criteria for Applications

Each application which passes the initial screening described in Part IV, Section D of this Program Announcement will be assessed and scored by three independent reviewers.

Each reviewer will give a numerical score for each application. These numerical scores will be supported by explanatory statements on a formal rating form describing major strengths and weaknesses under each applicable criterion published in the Announcement. Scoring will be based on a total of 100 points, and for each application will be the average of the scores of the three reviewers.

The competitive review of proposals will be based on the degree to which applicants:

(1) Adhere to the requirements in Part II and (2) incorporate each of the Elements and Sub-Elements below into their proposals, so as to describe convincingly a project that will meet the requirements set forth above.

In order to simplify the application preparation and review process, OCS seeks to keep grant proposals cogent and brief. Applications with project narratives (excluding Project Summaries, Budget Justifications and Appendices) exceeding 35 letter-sized pages of 12 c.p.i. type or equivalent on a single side will not be reviewed. Applicants should prepare and assemble their project descriptions using the following outline of required project elements. They should, furthermore, build their project concept, plans, and application description upon the guidelines set forth for each of the project elements.

Project descriptions are evaluated on the basis of substance, not length. Pages should be numbered consecutively and a table of contents should be included for easy reference. Applicants are reminded that the overall Project Narrative must not exceed 35 pages.

When writing their Project Narratives, applicants should respond to the review criteria using the same sequential order. Each Priority area shall be reviewed by separate review criteria.

Criteria for Review and Evaluation of Applications Submitted Under This Program Announcement

(**Note:** The review criteria both reiterate and explain in greater detail the information requirements contained in Part II of this Announcement.)

Criteria for Review and Evaluation of Applications Submitted Under Priority Area *1*

a. *Criterion I: Organizational Experience in Program Area and Staff Responsibilities (Maximum: 30 points)*

(1) *Organizational experience in program area (sub-rating: 0–20 points)* Applicant has documented experience in working with CDCs on a national basis.

Applicant has documented the capability to provide leadership in solving long-term and immediate problems locally and/or nationally in such areas as business development, commercial development, organizational and staff development, board training, and micro-entrepreneurship development. (0–8 points)

Applicant documents a capability (including access to a network of skilled individuals and/or organizations) in two or more of the following areas:

Business management, including strategic planning and fiscal management; finance, including development of financial packages and provision of financial/accounting services; and regulatory compliance, including assistance with zoning and permit compliance. (0–4 points)

The applicant has the demonstrated ability to mobilize dollars from sources such as the private sector (corporations, banks, foundations, etc.) and the public sector, including state and local governments. (0–2 points)

Applicant also demonstrates that it has a sound organizational structure and proven organizational capability as well as an ability to develop and maintain a stable program in terms of business, physical or community development activities that have provided permanent jobs, services, business development opportunities, and other benefits to poverty community residents. (0–4 points)

Applicant indicates why it feels that its successful experiences would be of assistance to existing CDC grantees that are experiencing difficulties in implementing their projects. (0–2 points)

(2) *Staff skills, resources and responsibilities* (*sub-rating 0–10 points*)

The application describes in brief resume form the experience and skills of the project director who is not only well qualified, but who has professional capabilities relevant to the successful implementation of the project. If the key staff person has not yet been identified, the application contains a comprehensive position description that indicates that the responsibilities to be assigned to the project director are relevant to the successful implementation of the project. (0–5 points)

The applicant has adequate facilities and resources (i.e. space and equipment) to successfully carry out the work plan. (0–3 points)

The assigned responsibilities of the staff are appropriate to the tasks identified for the project and sufficient time of senior staff will be budgeted to assure timely implementation and cost effective management of the project. (0–2 points)

b. *Criterion II: Work Program (Maximum: 20 points*)

The applicant demonstrates in some specificity a thorough understanding of the problems a grantee may encounter in implementing a successful project. (0–10 points)

The application includes a strategy for assessing the specific nature of the problems, outlining a course of action and identifying the resources required to resolve the problems. (0–10 points)

c. *Criterion III: Significant and Beneficial Impact (Maximum: 30 points*)

Project funds under this sub-priority area are to be used for the purposes of transferring expertise directly, or by a contract with a third party, to other OCS funded CDC grantees. Applicant describes how the success or failure of collaboration with these grantees will be documented. (0–15 points)

Applicant demonstrates an ability to disseminate results on the kinds of programmatic and administrative expertise transfer efforts in which it participated and successful strategies that it may have developed to share expertise with grantees during the grant period. (0–10 points)

Applicant states whether the results of the project will be included in a handbook, a progress paper, an evaluation report, a general manual, or seminars/workshops, and why the particular methodology chosen would be most effective. (0–5 points)

d. *Criterion IV: Public-Private Partnerships (Maximum: 15 points)*

Applicant demonstrates how it will design a comprehensive strategy that makes use of other available resources to resolve typical and recurrent CDC grantee problems.

e. *Criterion V: Budget Appropriateness and Reasonableness (Maximum: 5 points*)

Applicant documents that the funds requested are commensurate with the level of effort necessary to accomplish the goals and objectives of the project. The application includes a detailed budget breakdown for each of the appropriate budget categories in the SF–424A. (0–3 points)

The estimated cost to the government of the project also is reasonable in relation to the anticipated results. (0–2 points)

Criteria for Review and Evaluation of Applications Submitted Under Priority Area 2

a. *Criterion I: Need for Assistance (Maximum: 10 points*)

The application documents that the project addresses a vital, nationwide need related to the purposes of CDCs and provides data and information in support of its contention.

b. *Criterion II: Organizational Experience in Program Area and Staff Responsibilities (Maximum: 30 points*)

(1) *Organizational experience*

Applicant has documented experience in working with CDCs.

Applicant has documented the capability to provide leadership in solving long-term and immediate problems locally and/or nationally in such areas as business development, commercial development, organizational and staff development, board training, and micro-entrepreneurship development. Applicant documents a capability (including access to a network of skilled individuals and/or organizations) in two or more of the following areas: Business management, including strategic planning and fiscal management; finance, including development of financial packages and provision of financial/accounting services; and regulatory compliance, including assistance with zoning and permit compliance. (0–15 points)

(2) *Staff skills*

The applicant's proposed project director and primary staff are well qualified and their professional experiences are relevant to the successful implementation of the proposed project. (0–15 points)

c. *Criterion III: Work Plan (Maximum: 25 points*)

The applicant has submitted a detailed and specific work plan that is both sound and feasible. Specifically, the work plan:

(1) Demonstrates that all activities are comprehensive and nationwide in scope, adequately described, and

appropriately related to the goals of the program. (0–5 points)

(2) Demonstrates in some specificity a thorough understanding of the kinds of training and technical assistance that can be provided to the network of community development corporations. (0–5 points)

(3) Delineates the tasks and sub-tasks involved in the areas necessary to carry out the responsibilities, i.e. training, technical assistance, research, outreach, seminars, etc. (0–5 points)

(4) States the intermediate and end products to be developed by task and sub-task. (0–5 points)

(5) Provides realistic time frames and a chronology of key activities for the goals and objectives. (0–5 points)

d. *Criterion IV: Significant and Beneficial Impact (Maximum: 25 points)*

Project funds will be used for the purpose of providing training and technical assistance on a national basis to the network of community development corporations.

The applicant describes how:

(1) The project will assure long-term program and management improvements for community development corporations. (0–10 points)

(2) The project will impact on a significant number of community development corporations. (0–10 points)

(3) The project will leverage or mobilize significant other non-federal resources for the direct benefit of the project. (0–5 points)

e. *Criterion V: Budget Reasonableness (Maximum: 10 points)*

(1) The resources requested are reasonable and adequate to accomplish the project. (0–5 points)

(2) Total costs are reasonable and consistent with anticipated results. (0–5 points)

Part IV. Application Procedures

A. Application Development/ Availability of Forms

To be considered for a grant under this program announcement, an application must conform to the Program Requirements set out in Part II and be prepared in accordance with the guidelines set out in Part III. It must be submitted on the forms supplied in the attachments to this Announcement and in the manner prescribed below. Attachments A through K contain all standard forms necessary to apply for awards under this OCS program. These attachments and Parts V and VI of this Announcement contain all the general instructions required for submitting applications.

Additional copies may be obtained by writing or telephoning the office listed under the section entitled **FOR FURTHER INFORMATION CONTACT** at the beginning of this announcement. In addition, this Announcement is accessible on the Internet through the OCS Website for reading or downloading at: *http://www.acf.dhhs.gov/programs/ocs/kits1.htm* under ''Funding Opportunities.''

The applicant must be aware that in signing and submitting the application for this award, it is certifying that it will comply with the Federal requirements concerning the drug-free workplace, the Certification Regarding environmental tobacco smoke, and debarment regulations set forth in Attachments E, J, and F.

PART III contains instructions for the substance and development of the project narrative. PART V contains instructions for completing application forms. PART VI, Section A, describes the contents and format of the application as a whole.

B. Application Submission

1. *Number of Copies Required.* One signed original application and two copies must be submitted at the time of initial submission. (OMB 0970–0139). Two additional optional copies would be appreciated to facilitate the processing of applications.

The first page of the SF–424 must contain in the lower right-hand corner, a designation indicating under which priority area funds are being requested (for example AM for 1 and UT for 2. (See Part II for a description of each of the priority areas.)

2. *Closing Date.* The closing date for receiving applications is cited under the heading **DATES** at the beginning of this announcement. Applications received after the closing date will be classified as late.

Deadline: Mailed applications shall be considered as meeting an announced deadline if they are received on or before the deadline time and date at the OCS Operations Center: 1815 North Fort Myer Drive, Suite 300, Arlington Virginia 22209; Attention: Application for Community Development Program—Special Initiatives.

Applicants are responsible for mailing applications well in advance, when using all mail services, to ensure that the application is received on or before the deadline time and date. Applications hand carried by applicants, applicant couriers, other representatives of the applicant, or by overnight/express mail couriers shall be considered as meeting an announced deadline if they are received on or before the deadline date, between the hours of 8 a.m. to 4:30 p.m. EST at the U.S. Department of Health and Human Services, Administration for Children and Families, Office of Community Services Operations Center: 1815 North Fort Myer Drive, Suite 300, Arlington, VA 22209 between Monday and Friday (excluding Federal holidays). This address must appear on the envelope/package containing the application with the note ''Attention: Application for ''Community Services Block Grant—Discretionary Awards—Special Initiatives''. Applicants are cautioned that express/overnight mail services do not always deliver as agreed.

ACF cannot accommodate transmission of applications by fax or through other electronic media. Therefore, applications transmitted to ACF electronically will not be accepted regardless of date or time of submission and time of receipt.

3. *Late Applications.* Applications which do not meet the criteria above are considered late applications. ACF shall notify each late applicant that its application will not be considered in the current competition.

4. *Extension of Deadlines.* ACF may extend application deadlines when circumstances such as acts of God (floods, hurricanes, etc) occur, or when there are widespread disruptions of the mail service, or in other rare cases. A determination to extend or waive deadline requirements rest with the Chief Grants Management Officer.

C. Intergovernmental Review

This program is covered under Executive Order 12372, ''Intergovernmental Review of Federal Programs,'' and 45 CFR Part 100, ''Intergovernmental Review of Department of Health and Human Services Program and Activities.'' Under the Order, States may design their own processes for reviewing and commenting on proposed Federal assistance under covered programs.

All States and Territories except Alabama, Alaska, Arizona, Colorado, Connecticut, Hawaii, Idaho, Indiana, Kansas, Louisiana, Massachusetts, Minnesota, Montana, Nebraska, New Jersey, New York, Ohio, Oklahoma, Oregon, Pennsylvania, South Dakota, Tennessee, Vermont, Virginia, Washington, Wyoming, and Palau have elected to participate in the Executive Order process and have established Single Points of Contact (SPOCs). Applicants from these 27 jurisdictions do not need to take action regarding E.O. 12372. Applicants for projects to be administered by Federally-recognized Indian Tribes are also exempt from the requirements of E.O. 12372. Otherwise, applicants should contact their SPOCs

as soon as possible to alert them of the prospective applications and receive any necessary instructions. Applicants must submit any required material to the SPOCs as soon as possible so that the program office can obtain and review SPOC comments as part of the award process. It is imperative that the applicant submit all required materials, if any, to the SPOC and indicate the date of this submittal (or indicate ''not applicable'' if no submittal is required) on the standard form 424, item 16a.

Under 45 CFR 100.8(a)(2), a SPOC has 60 days from the application deadline to comment on proposed new or competing continuation awards.

SPOCs are encouraged to eliminate the submission of routine endorsements as official recommendations.

Additionally, SPOCs are requested to clearly differentiate between mere advisory comments and those official State process recommendations which may trigger the ''accommodate or explain'' rule.

When comments are submitted directly to ACF, they should be addressed to: Department of Health and Human Services, Administration for Children and Families, Office of Grants Management, Division of Discretionary Grants, 370 L'Enfant Promenade, SW., 4th floor West, Washington, DC 20447.

A list of the Single Points of Contact for each State and Territory is included as Attachment G to this Announcement. You may also find this list at the following web address: *http://www/whitehouse.gov/omb/grants/spoc.html.*

D. Initial OCS Screening

Each application submitted under this program announcement will undergo a pre-review to determine that the application was received by the closing date and submitted in accordance with the instructions in this Announcement.

All applications that meet the published deadline requirements as provided in this Program Announcement will be screened for completeness and conformity with the following requirements. Only complete applications that meet the requirements listed below will be reviewed and evaluated competitively. Other applications will be returned to the applicants with a notation that they were unacceptable and will not be reviewed.

The following requirements must be met by all applicants except as noted:

(1) The application must contain a signed Standard Form 424 Application for Federal Assistance'' (SF–424), Attachment B, a budget (SF–424A), Attachment C, and signed ''Assurances'' (SF–424B), Attachment D, completed according to instructions published in Part V and Attachments A, B, and C of this Program Announcement. The SF–424 and the SF–424B must be signed by an official of the organization applying for the grant who has authority to obligate the organization legally. Applicant must also be aware that the applicant's legal name as required on the SF–424 (Item 5) must match that listed as corresponding to the Employer Identification Number (Item 6).

(2) A project narrative must also accompany the standard forms. OCS requires that the narrative portion of the application be no more than 35 letter-size pages, numbered consecutively , and typewritten on one side of the paper only with one-inch margins and type face no smaller than 12 characters per inch (c.p.i.) or equivalent. Applications with project narratives (excluding Project Summaries and appendices) of more than 35 letter-size pages of 12 c.p.i. type or equivalent on a single side will not be reviewed for funding.

The budget narrative, charts, exhibits, resumes, position descriptions, letters of support or commitment are not counted against this page limit and should be in the Appendix. It is strongly recommended that applicants adopt for their Program project narratives the sequence and content Described in Part III.

(3) Application must contain documentation of the applicant's tax exempt status as required under Part I, Section E.

E. Consideration of Applications

Applications which pass the initial OCS screening will be reviewed and rated by an independent review panel on the basis of requirements set forth in Parts II and III. These review criteria were designed to assess the quality of a proposed project and determine the likelihood of its success. The review criteria are closely related and are considered as a whole in judging the overall quality of an application. Points are awarded only to applications which are responsive to the program elements and review criteria within the context of this Program Announcement.

Reviewers' scores will assist the Director and OCS program staff in considering competing applications. Reviewers' scores will weigh heavily in funding decisions, but will not be the only factors considered.

Applications generally will be considered in order of the average scores assigned by reviewers. However, highly ranked applications are not guaranteed funding because other factors are taken into consideration. These include, but are not limited to: the timely and proper completion by applicant of projects funded with OCS funds granted in the last five (5) years; comments of reviewers and government officials; staff evaluation and input; amount and duration of the grant requested and the proposed project's consistency and harmony with OCS goals and policy; geographic distribution of applications; previous program performance of applicants; compliance with grant terms under previous HHS grants, including the actual dedication to program of mobilized resources as set forth in project applications; audit reports; investigative reports; and applicant's progress in resolving any final audit disallowance on previous OCS or other Federal agency grants.

Applicants may omit from the application the specific salary rates or amounts for individuals identified in the application budget. Rather, only summary information is required. OCS reserves the right to discuss applications with other Federal or non-Federal funding sources to verify the applicant's performance record and the documents submitted.

Part V. Instructions for Completing Forms SF–424

All application forms are now available on the ACF Website for downloading: *http://www.acf.dhhs.gov/programs/ofs/forms.htm.*

The standard forms attached to this announcement shall be used to apply for funds under this program announcement.

It is suggested that you reproduce single-sided copies of the SF–424 and SF–424A, and type your application on the copies. Please prepare your application in accordance with instructions provided on the forms (Attachments B, C and D) as modified by the instructions set forth in PART III, and the OCS specific instructions set forth below:

Provide line item detail and detailed calculations for each budget object class identified on the Budget Information form. Detailed calculations must include estimation methods, quantities, unit costs, and other similar quantitative detail sufficient for the calculation to be duplicated. The detailed budget must also include a breakout by the funding sources identified in Block 15 of the SF–424.

Provide a narrative budget justification which describes how the categorical costs are derived. Discuss the necessity, reasonableness, and allocability of the proposed costs.

(**Note:** The Budget detail and Narrative Budget Justification should

follow the SF 424 and 424A, and are not counted as part of the Project Narrative.)

A. SF–424—Application for Federal Assistance (Attachment B)

Where the applicant is a previous DHHS grantee, enter the Central Registry System Employee Identification Number (CRS/EIN) and the Payment Identifying Number, if one has been assigned, in the Block entitled Federal Identifier located at the top right hand corner of the form (third line from the top).

Item 1. For the purposes of this announcement, all projects are considered Applications; there are no Pre-Applications.

Item 7. If applicant Is an Indian Tribe enter ''K'' in the box. If applicant is a non-profit organization enter ''N'' in the box.

Item 9. Name of Federal Agency—Enter DHHS–ACF/OCS.

Item 10. The Catalog of Federal Domestic Assistance number for OCS programs covered under this announcement is 93.570. The title is ''Community Services Block Grant Discretionary Awards—Special Initiatives.''

Item 11. In addition to a brief descriptive title of the project, indicate the priority area for which funds are being requested. Use the following letter designations: Use AM for Priority Area 1 and UT for Priority Area 2.

Item 13. Proposed Project Dates—Show 17-month project period (See Part II). In addition, the project start date must begin on or before September 30, 2002; the ending date should be calculated on the basis of a 17-month project period.

Item 14. Congressional District of Applicant/Project—Enter the number(s) of the Congressional District where the applicant's principal office is located and the number(s) of the Congressional District(s) where the project will be located.

Item 15. Estimated Funding—Item 15a. Show the total amount requested for the entire project period; Item 15b–e. For each line item, show both cash and third party in-kind contributions for the total project period; Item 15f. Show the estimated amount of program income for the total project period; Item 15g. Enter the sum of all the line items.

B. SF–424A—Budget Information—Non-Construction Programs (Attachment C)

In completing these sections, the Federal Funds budget entries will relate to the requested Community Services Block Grant—Discretionary Awards—Special Initiatives funds only, and Non-Federal will include funds mobilized from all other sources—applicant, state, local, and other. Federal funds other than those requested from the Community Services Block Grant—Discretionary Awards—Special Initiatives should be included in *Non-Federal* entries.

Sections A and D of SF–424A must contain entries for both Federal (OCS) and non-Federal mobilized funds.

Section A—Budget Summary

Lines 1–4,

Column (a) Line 1—Enter CSBG Community Economic Development,

Column (b) Line 1—Enter 93.570,

Columns (c) and (d)—Not Applicable,

Columns (e), (f) and (g)—Line 1—Enter appropriate amounts needed to support the project for the entire project period.

Line 5,

Enter the figures from Line 1 for all columns completed, (e), (f), and (g).

Section B—Budget Categories

This section should contain entries for OCS funds only. For all projects, the budget period of 17 months will be entered in Column (1).

Allocability of costs is governed by applicable cost principles set forth in the Code of Federal Regulations (CFR), Title 45, Parts 74 and 92.

Budget estimates for administrative costs must be supported by adequate detail for the grants officer to perform a cost analysis and review. Adequately detailed calculations for each budget object class are those which reflect estimation methods, quantities, unit costs salaries, and other similar quantitative detail sufficient for the calculation to be duplicated. For any additional object class categories included under the object class other, identify the additional object class(es) and provide supporting calculations.

Supporting narratives and justifications are required for each budget category, with emphasis on unique/special initiatives; large dollar amounts; local, regional, or other travel; new positions; major equipment purchases; and training programs.

A detailed itemized budget with a separate budget justification for each major item should be included as indicated below:

Line 6a

Personnel—Enter the total costs of salaries and wages.

Justification—Identify the project director and staff. Specify by title or name the percentage of time allocated to the project, the individual annual salaries and the cost to the project (both Federal and non-Federal) of the organization's staff who will be working on the project.

Line 6b

Fringe Benefits—Enter the total costs of fringe benefits unless treated as part of an approved indirect cost rate which is entered on Line 6j.

Justification—Enter the total costs of fringe benefits, unless treated as part of an approved indirect cost rate. Provide a breakdown of amounts and percentages that comprise fringe benefit costs.

Line 6c

Travel—Enter total cost of all travel by employees of the project. Do not enter costs for consultant's travel.

Justification—Include the name(s) of traveler(s), total number of trips, destinations, length of stay, mileage rate, transportation costs and subsistence allowances. Traveler must be a person listed under the personnel line or employee being paid under non-Federal share.

(**Note:** Local transportation and consultant travel costs are entered on Line 6h.)

Line 6d

Equipment—Enter the total costs of all equipment to be acquired by the project. Equipment means an article of non-expendable, tangible personal property having a useful life of more than one year and an acquisition cost which equals or exceeds the lesser of (a) the capitalization level established by the organization for financial statement purposes, or (b) $5,000.

(**Note:** If an applicant's current rate agreement was based on another definition for equipment, such as ''tangible personal property $500 or more,'' the applicant shall use the definition used by the cognizant agency in determining the rate(s). However, consistent with the applicant's equipment policy, lower limits may be set.)

Justification—Equipment to be purchased with Federal funds must be required to conduct the project, and the applicant organization or its sub-grantees must not already have the equipment or a reasonable facsimile available to the project.

Line 6e

Supplies—Enter the total costs of all tangible personal property other than that included on line 6d.

Justification—Provide a general description of what is being purchased such as type of supplies (office, classroom, medical, etc.). Include equipment costing less than $5,000 per item.

Line 6f

Contractual—Costs of all contracts for services and goods except for those which belong under other categories such as equipment, supplies, construction, etc. Third-party evaluation contracts (if applicable) and contracts with secondary recipient organizations, including delegate agencies and specific project(s) or businesses to be financed by the applicant, should be included under this category.

Justification: All procurement transactions shall be conducted in a manner to provide, to the maximum extent practical, open and free competition. Recipients and sub-recipients, other than States that are required to use Part 92 procedures, must justify any anticipated procurement action that is expected to be awarded without competition and exceed the simplified acquisition threshold fixed at 41 U.S.C. 403(11) currently set at $100,000.

Recipients might be required to make available to ACF pre-award review and procurement documents, such as request for proposals or invitations for bids, independent cost estimates, etc.

Note: Whenever the applicant intends to delegate part of the project to another agency, the applicant must provide a detailed budget and budget narrative for each delegate agency, by agency title, along with the required supporting information referred to in these instructions.

Line 6g

Construction—Not applicable.

Line 6h

Other—Enter the total of all other costs. Such costs, where applicable, may include, but are not limited to, insurance, food, medical and dental costs (non-contractual); fees and travel paid directly to individual consultants; local transportation (all travel which does not require per diem is considered local travel); space and equipment rentals; printing and publication; computer use training costs including tuition and stipends; training service costs including wage payments to individuals and supportive service payments; and staff development costs.

Line 6j

Indirect Charges—Enter the total amount of indirect costs. This line should be used only when the applicant currently has an indirect cost rate approved by DHHS or other Federal agencies.

If the applicant organization is in the process of initially developing or renegotiating a rate, it should, immediately upon notification that an award will be made, develop a tentative indirect cost rate proposal based on its most recently completed fiscal year in accordance with the principles set forth in the pertinent DHHS Guide for Establishing Indirect Cost Rates and submit it to the appropriate DHHS Regional Office. It should be noted that when an indirect cost rate is requested, those costs included in the indirect cost pool cannot also be budgeted or charged as direct costs to the grant. Indirect costs consistent with approved indirect cost rate agreements are allowable. Also, if the applicant is requesting a rate which is less than what is allowed under the program, the authorized representative of the applicant organization must submit a signed acknowledgment that the applicant is accepting a lower rate than allowed.

Line 6k

Totals—Enter the total amount of Lines 6i and 6j.

Line 7

Program Income—Enter the estimated amount of income, if any, expected to be generated from this project. Separately show expected program income generated from OCS support and income generated from other mobilized funds. Do not add or subtract this amount from the budget total. Show the nature and source of income in the program narrative statement.

Justification—Describe the nature, source and anticipated use of program income in the Program Narrative Statement.

Section C—Non-Federal Resources

This section is to record the amounts of non-Federal resources that will be used to support the project. Non-Federal resources mean other than OCS funds for which the applicant has received a commitment. Provide a brief explanation, on a separate sheet, showing the type of contribution, broken out by Object Class Category, (see SF–424A, Section B.6) and whether it is cash or third party in-kind. The firm commitment of these required funds must be documented and submitted with the application in order to be given credit in the criterion.

This documentation must be in the form of letters of commitment or letters of intent from the organization(s)/individuals from which funds will be received.

Line 8

Column (a)—Enter the project title.

Column (b)—Enter the amount of cash or donations to be made by the applicant.

Column (c)—Enter the State contribution.

Column (d)—Enter the amount of cash and third party in-kind contributions to be made from all other sources.

Column (e)—Enter the total of columns (b), (c), and (d).

Lines 9, 10 and 11

Leave Blank

Line 12

Carry the total of each column of Line 8, (b) through (e). The amount in Column (e) should be equal to the amount on Section A, Line 5, Column (f).

Justification—Describe third party in-kind contributions, if included.

Section D—Forecasted Cash Needs

Line 13

Federal—Enter the amount of Federal (OCS) cash needed for this grant, by quarter, during the 12-month budget period.

Line 14

Non-Federal—Enter the amount of cash from all other sources needed by quarter during the first year.

Line 15

Totals—Enter the total of Lines 13 and 14.

Section F—Other Budget Information

Line 21

Direct Charges—Include narrative justification required under Section B for each object class category for the total project period.

Line 22

Indirect Charges—Enter the type of DHHS or other Federal agency approved indirect cost rate (provisional, predetermined, final or fixed) that will be in effect during the funding period, the estimated amount of the base to which the rate is applied and the total indirect expense. Also, enter the date the rate was approved, where applicable. Attach a copy of the approved rate agreement.

Line 23

Provide any other explanations and continuation sheets required or deemed necessary to justify or explain the budget information.

C. SF–424B—Assurances Non-Construction Programs (Attachment D)

All applicants must sign and return the ''Assurances'' with the application.

Part VI. Contents of Application and Receipt Process

A. Contents of Application

Each Community Services Block Grant—Discretionary Awards—Special Initiatives application must include all of the following, in the order listed below:

1. Table of Contents
2. An abstract of the Proposed Project—very brief, not to exceed 250 words, that would be suitable for use in an announcement that the application has been selected for a grant award and which identifies the type of project, the

target population, and the major elements of the work plan.

3. A completed Standard Form 424 that has been signed by an Official of the organization applying for the grant who has authority to obligate the organization legally. (Attachment B)

4. Budget Information—Non-Construction Programs (SF–424A) (Attachment C);

5. A narrative budget justification for each object class category required under Section B, SF–424A.

6. Certification and Assurances Required:

Applicants requesting financial assistance for a non-construction projects must file the Standard Form 424B, ''Assurances: Non-Construction Programs.'' Applicants must sign and return the Standard Form 424B with their applications (See Attachment D).

Applicants must provide a certification regarding lobbying when applying for an award in excess of $100,000. Applicants must sign and return the certification with their application (See Attachment H).

Applicants must disclose lobbying activities on the Standard Form LLL when applying for an award in excess of $100,000. Applicants who have used non-federal funds for lobbying activities in connection with receiving assistance under this announcement shall complete a disclosure form to report lobbying. Applicants must sign and return the disclosure form, if applicable, with their applications (See Attachment H).

Applicants must make the appropriate certification of their compliance with the Drug-Free Workplace Act of 1988. By signing and submitting the applications, applicants are providing the certification and need not mail back the certification with the applications (See Attachment E).

Applicant must make the appropriate certification that they are not presently debarred, suspended or otherwise ineligible for an award. By signing and submitting the applications, applicants are providing the certification and need not mail back the certification with the applications. (See Attachment F)

Applicants must make the appropriate certification of their compliance with all Federal statues relating to nondiscrimination. By signing and submitting the applications, applicants are providing the certification and need not mail back a certification form.

Applicants must make the appropriate certification of their compliance with the requirements of the Pro-Children Act of 1994 as outlined in Certification Regarding Environmental Tobacco Smoke. (See Attachment J)

7. A Project Narrative of no more than 35 pages consisting of the Elements described in Part III of this announcement set forth in the order therein presented and preceded by a consecutively numbered table of contents.

The total number of pages for the narrative portion of the application package must not exceed 35 pages (See Part IV.D.2 for pages that do not count against the 35-page limit).

8. Appendices—proof of nonprofit tax-exempt status as outlined in Part II, Section C; Single Point of Contact comments, if applicable, and resumes and position descriptions.

Pages should be numbered sequentially throughout, including appendices, beginning with the Abstract as page 1.

B. Application Format

Applications must be uniform in composition since OCS may find it necessary to duplicate them for review purposes. Therefore, applications must be submitted on white 8½ x 11 inch paper only. Applicants must not include colored, oversized or folded materials. Applicants should not include organizational brochures or other promotional materials, slides, films, clips, etc. Such material will be discarded if included. Applications must be bound or enclosed in loose-leaf binder notebooks. Preferably, applications should be two-holed punched at the top center and fastened separately with a compressor slide paper fastener, or a binder clip.

C. Acknowledgment of Receipt

All applicants will receive an acknowledgment with an assigned identification number. Applicants are requested to supply a self-addressed mailing label with their Application, or a FAX number or e-mail address which can be used for acknowledgment. The assigned identification number, along with any other identifying codes, must be referenced in all subsequent communications concerning the Application. If an acknowledgment is not received within three weeks after the deadline date, please notify the OCS Operations Center at 1–800–281–9519.

Part VII. Post Award Information and Reporting Requirements

A. Notification of Grant Award

Following approval of the applications selected for funding, notice of project approval and authority to draw down project funds will be made in writing. The official award document is the Financial Assistance Award which specifies the amount of Federal funds approved for use in the project, the project and budget period for which support is provided, the terms and conditions of the award.

B. Reporting Requirements

Grantees will be required to submit semi-annual program progress and financial reports (SF 269) as well as a final progress and financial report.

C. Audit Requirements

Grantees are subject to the audit requirements in 45 CFR part 74 (non-profit organizations) or part 92 (governmental entities) which require audits under OMB Circular A–133.

D. Prohibitions and Requirements With Regard To Lobbying

Section 319 of Public Law 101–121, signed into law on October 23, 1989, imposes prohibitions and requirements for disclosure and certification related to lobbying on recipients of Federal contracts, grants, cooperative agreements, and loans. It provides limited exemptions for Indian tribes and tribal organizations. Current and prospective recipients (and their sub-tier contractors and/or grantees) are prohibited from using appropriated funds for lobbying Congress or any Federal agency in connection with the award of a contract, grant, cooperative agreement or loan. In addition, for each award action in excess of $100,000 (or $150,000 for loans) the law requires recipients and their subtier contractors and/or sub-grantees (1) to certify that they have neither used nor will use any appropriated funds for payment to lobbyists, (2) to submit a declaration setting forth whether payments to lobbyists have been or will be made out of non-appropriated funds and, if so, the name, address, payment details, and purpose of any agreements with such lobbyists whom recipients or their subtier contractors or sub-grantees will pay with the non-appropriated funds and (3) to file quarterly up-dates about the use of lobbyists if an event occurs that materially affects the accuracy of the information submitted by way of declaration and certification.

The law establishes civil penalties for noncompliance and is effective with respect to contracts, grants, cooperative agreements and loans entered into or made on or after December 23, 1989. See Attachment H, for certification and disclosure forms to be submitted with the applications for this program.

E. Applicable Federal Regulations

Attachment K indicates the regulations which apply to all

applicants/grantees under the Community Services Block Grant—Discretionary Awards—Special Initiatives.

Dated: July 29, 2002.

Clarence H. Carter,

Director, Office of Community Services.

BILLING CODE 4184–01–P

List of Attachments

A. 2002 Poverty Income Guidelines For updates see: *http://aspe.os.dhhs.gov/poverty/02poverty.htm*
B. Standard Form 424, Application for Federal Assistance
C. Standard Form 424A, Budget Information—Non-Construction Programs
D. Standard Form 424B, Assurances—Non-Construction Programs
E. Certification Regarding Drug-Free Workplace Requirements
F. Certification Regarding Debarment, Suspension And Other Responsibility Matters
G. Intergovernmental Review State Single Point Of Contact (SPOC) List
H. Certification Regarding Lobbying and Disclosure Of Lobbying Activities, Standard Form LLL
I. Applicant's Checklist
J. Certification Regarding Environmental Tobacco Smoke
K. DHHS Regulations Applying To All Applicants/Grantees Under The Community Services Block Grant—Discretionary Awards—Special Initiatives

Attachment A

2002 Poverty Guidelines for the 48 Contiguous States and the District of Columbia

Size of family unit	Poverty guideline
1	$8,860
2	11,940
3	15,020
4	18,100
5	21,180
6	24,260
7	27,340
8	30,420

For family units with more than 8 members, add $3,080 for each additional member.

(The same increment applies to smaller family sizes also, as can be seen in the figures above).

2001 Poverty Guidelines for Alaska

Size of family unit	Poverty guideline
1	$11,080
2	14,930
3	18,780
4	22,630
5	26,480
6	30,330
7	34,180

2001 Poverty Guidelines for Alaska—Continued

Size of family unit	Poverty guideline
8	38,030

For family units with more than 8 members, add $3,850 for each additional member.

(The same increment applies to smaller family sizes also, as can be seen in the figures above).

2001 Poverty Guidelines for Hawaii

Size of family unit	Poverty guidelines
1	$10,200
2	13,740
3	17,280
4	20,820
5	24,360
6	27,900
7	31,440
8	34,180

For family units with more than 8 members, add $3,540 for each additional member.

(The same increment applies to smaller family sizes also, as can be seen in the figures above).

BILLING CODE 4184–01–M

Attachment B, page 1

OMB Approval No. 0348-0043

APPLICATION FOR FEDERAL ASSISTANCE

	2. DATE SUBMITTED	Applicant Identifier
1. TYPE OF SUBMISSION: Application ☐ Construction ☐ Non-Construction; Preapplication ☐ Construction ☐ Non-Construction	**3. DATE RECEIVED BY STATE**	State Application Identifier
	4. DATE RECEIVED BY FEDERAL AGENCY	Federal Identifier

5. APPLICANT INFORMATION

Legal Name:	Organizational Unit:
Address *(give city, county, State, and zip code)*:	Name and telephone number of person to be contacted on matters involving this application *(give area code)*

6. EMPLOYER IDENTIFICATION NUMBER *(EIN)*: ☐☐ – ☐☐☐☐☐☐☐

7. TYPE OF APPLICANT: *(enter appropriate letter in box)* ☐

A. State
B. County
C. Municipal
D. Township
E. Interstate
F. Intermunicipal
G. Special District
H. Independent School Dist.
I. State Controlled Institution of Higher Learning
J. Private University
K. Indian Tribe
L. Individual
M. Profit Organization
N. Other (Specify) _____

8. TYPE OF APPLICATION:

☐ New ☐ Continuation ☐ Revision

If Revision, enter appropriate letter(s) in box(es) ☐ ☐

A. Increase Award B. Decrease Award C. Increase Duration
D. Decrease Duration Other*(specify)*:

_____

9. NAME OF FEDERAL AGENCY:

10. CATALOG OF FEDERAL DOMESTIC ASSISTANCE NUMBER: ☐☐ – ☐☐☐

TITLE:

11. DESCRIPTIVE TITLE OF APPLICANT'S PROJECT:

12. AREAS AFFECTED BY PROJECT *(Cities, Counties, States, etc.)*:

13. PROPOSED PROJECT		**14. CONGRESSIONAL DISTRICTS OF:**	
Start Date	Ending Date	a. Applicant	b. Project

15. ESTIMATED FUNDING:

a. Federal	$ .00
b. Applicant	$ .00
c. State	$ .00
d. Local	$ .00
e. Other	$ .00
f. Program Income	$ .00
g. TOTAL	$ .00

16. IS APPLICATION SUBJECT TO REVIEW BY STATE EXECUTIVE ORDER 12372 PROCESS?

a. YES. THIS PREAPPLICATION/APPLICATION WAS MADE AVAILABLE TO THE STATE EXECUTIVE ORDER 12372 PROCESS FOR REVIEW ON:

DATE _____

b. No. ☐ PROGRAM IS NOT COVERED BY E. O. 12372
☐ OR PROGRAM HAS NOT BEEN SELECTED BY STATE FOR REVIEW

17. IS THE APPLICANT DELINQUENT ON ANY FEDERAL DEBT?

☐ Yes **If "Yes," attach an explanation.** ☐ No

18. TO THE BEST OF MY KNOWLEDGE AND BELIEF, ALL DATA IN THIS APPLICATION/PREAPPLICATION ARE TRUE AND CORRECT, THE DOCUMENT HAS BEEN DULY AUTHORIZED BY THE GOVERNING BODY OF THE APPLICANT AND THE APPLICANT WILL COMPLY WITH THE ATTACHED ASSURANCES IF THE ASSISTANCE IS AWARDED.

a. Type Name of Authorized Representative	b. Title	c. Telephone Number
d. Signature of Authorized Representative		e. Date Signed

Previous Edition Usable
Authorized for Local Reproduction

Standard Form 424 (Rev. 7-97)
Prescribed by OMB Circular A-102

BILLING CODE 4184–01–C

Attachment B—Instructions for the SF–424

Public reporting burden for this collection of information is estimated to average 45 minutes per response, including time for reviewing instructions, searching existing data sources, gathering and maintaining the data needed, and completing and reviewing the collection of information. Send comments regarding the burden estimate or any other aspect of this collection of information, including suggestions for reducing this burden, to the Office of Management and Budget, Paperwork Reduction Project (0348–0043), Washington, DC 20503.

Please do not return your completed form to the Office of Management and Budget. Send it to the address provided by the sponsoring agency.

This is a standard form used by applicants as a required facesheet for preapplications and applications submitted for Federal assistance. It will be used by Federal agencies to obtain applicant certification that States which have established a review and comment procedure in response to Executive Order 12372 and have selected the program to be included in their process, have been given an opportunity to review the applicant's submission.

Item and Entry

1. Self-explantatory.
2. Date application submitted to Federal agency (or State if applicable) and applicant's control number (if applicable).
3. State use only (if applicable).
4. If this application is to continue or revise an existing award, enter present Federal identifier number. If for a new project, leave blank.
5. Legal name of applicant, name of primary organization unit which will undertake the assistance activity, complete address of the applicant, and name and telephone number of the person to contact on matters related to this application.
6. Enter Employer Identification Number (EIN) as assigned by the Internal Revenue Service.
7. Enter the appropriate letter in the space provided.
8. Check appropriate box and enter appropriate letter(s) in the space(s) provided:

—''New'' means a new assistance award.

—''Continuation'' means an extension for an additional funding/budget period for a period for a project with a projected completion date.

—''Revision'' means any change in the Federal Government's financial obligation or contingent liability from an existing obligation.

9. Name of Federal agency from which assistance is being requested with this application.
10. Use the Catalog of Federal Domestic Assistance number and title of the program under which assistance is requested.
11. Enter a brief descriptive title of the project. If more than one program is involved, you should append an explanation on a separate sheet. If appropriate (e.g., construction or real property projects), attach a map showing project location. For preapplications, use a separate sheet to provide a summary description of this project.
12. List only the largest political entities affected (e.g., State, counties, cities).
13. Self-explanatory.
14. List the applicant's Congressional District and any District(s) affected by the program or project.
15. Amount requested or to be contributed during the first funding/budget period by each contributor. Value of in-kind contributions should be included on appropriate lines as applicable. If the action will result in a dollar change to an existing award, indicate *only* the amount of the change. For decreases, enclose the amounts in parentheses. If both basic and supplemental amounts are included, show breakdown on an attached sheet. For multiple program funding, use totals and show breakdown using same categories as item 15.
16. Applicants should contact the State Single Point of Contact (SPOC) for Federal Executive Order 12372 to determine whether the application is subject to the State intergovernmental review process.
17. This question applies to the applicant organization, not the person who signs as the authorized representative. Categories of debt include delinquent audit disallowances, loans and taxes.
18. To be signed by the authorized representative of the applicant. A copy of the governing body's authorization for you to sign this application as official representative must be on file in the applicant's office. (Certain Federal agencies may require that this authorization be submitted as part of the application.)

BILLING CODE 4184–01–M

Attachment C, page 1

BUDGET INFORMATION - Non-Construction Programs

OMB Approval No. 0348-0044

SECTION A - BUDGET SUMMARY

Grant Program Function or Activity (a)	Catalog of Federal Domestic Assistance Number (b)	Estimated Unobligated Funds		New or Revised Budget		
		Federal (c)	Non-Federal (d)	Federal (e)	Non-Federal (f)	Total (g)
1.		$	$	$	$	$
2.						
3.						
4.						
5. Totals		$	$	$	$	$

SECTION B - BUDGET CATEGORIES

6. Object Class Categories	GRANT PROGRAM, FUNCTION OR ACTIVITY				Total
	(1)	(2)	(3)	(4)	(5)
a. Personnel	$	$	$	$	$
b. Fringe Benefits					
c. Travel					
d. Equipment					
e. Supplies					
f. Contractual					
g. Construction					
h. Other					
i. Total Direct Charges *(sum of 6a-6h)*					
j. Indirect Charges					
k. TOTALS *(sum of 6i and 6j)*	$	$	$	$	$
7. Program Income	$	$	$	$	$

Authorized for Local Reproduction

Standard Form 424A (Rev. 7-97)
Prescribed by OMB Circular A-102

Previous Edition Usable

Attachment C, page 2

SECTION C - NON-FEDERAL RESOURCES				
(a) Grant Program	(b) Applicant	(c) State	(d) Other Sources	(e) TOTALS
8.	$	$	$	$
9.				
10.				
11.				
12. TOTAL *(sum of lines 8-11)*	$	$	$	$

SECTION D - FORECASTED CASH NEEDS					
	Total for 1st Year	1st Quarter	2nd Quarter	3rd Quarter	4th Quarter
13. Federal	$	$	$	$	$
14. Non-Federal					
15. TOTAL *(sum of lines 13 and 14)*	$	$	$	$	$

SECTION E - BUDGET ESTIMATES OF FEDERAL FUNDS NEEDED FOR BALANCE OF THE PROJECT				
(a) Grant Program	FUTURE FUNDING PERIODS (Years)			
	(b) First	(c) Second	(d) Third	(e) Fourth
16.	$	$	$	$
17.				
18.				
19.				
20. TOTAL *(sum of lines 16-19)*	$	$	$	$

SECTION F - OTHER BUDGET INFORMATION	
21. Direct Charges:	22. Indirect Charges:
23. Remarks:	

Authorized for Local Reproduction

Standard Form 424A (Rev. 7-97) Page 2

BILLING CODE 4184–01–C

Attachment C—Instructions for the SF–424A

Public reporting burden for this collection of information is estimated to average 180 minutes per response, including time for reviewing instructions, searching existing data sources, gathering and maintaining the data needed, and completing and reviewing the collection of information. Send comments regarding the burden estimate or any other aspect of this collection of information, including suggestions for reducing this burden, to the Office of Management and Budget, Paperwork Reduction Project (0348–0044), Washington, DC 20503. Please do not return your completed form to the Office of Management and Budget. Send it to the address provided by the sponsoring agency.

General Instructions

This form is designed so that application can be made for funds from one or more grant programs. In preparing the budget, adhere to any existing Federal grantor agency guidelines which prescribe how and whether budgeted amounts should be separately shown for different functions or activities within the program. For some programs, grantor agencies may require budgets to be separately shown by function or activity. For other programs, grantor agencies may require a breakdown by function or activity. Sections A, B, C, and D should include budget estimates for the whole project except when applying for assistance which requires Federal authorization in annual or other funding period increments. In the latter case, Sections A, B, C, and D should provide the budget for the first budget period (usually a year) and Section E should present the need for Federal assistance in the subsequent budget periods. All applications should contain a breakdown by the object class categories shown in Lines a–k of Section B.

Section A. Budget Summary Lines 1–4 Columns (a) and (b)

For applications pertaining to a single Federal grant program (Federal Domestic Assistance Catalog number) and not requiring a functional or activity breakdown, enter on Line 1 under Column (a) the Catalog program title and the Catalog number in Column (b).

For applications pertaining to a single program requiring budget amounts by multiple functions or activities, enter the name of each activity or function on each line in Column (a), and enter the Catalog number in Column (b). For applications pertaining to multiple programs where none of the programs require a breakdown by function or activity, enter the Catalog program title on each line in Column (a) and the respective Catalog number on each line in Column (b).

For applications pertaining to multiple programs where one or more programs require a breakdown by function or activity, prepare a separate sheet for each program requiring the breakdown. Additional sheets should be used when one form does not provide adequate space for all breakdown of data required. However, when more than one sheet is used, the first page should provide the summary totals by programs.

Line 1–4, Columns (c) through (g).

For new applications, leave Columns (c) and (d) blank. For each line entry in Columns (a) and (b), enter in Columns (e), (f), and (g) the appropriate amounts of funds needed to support the project for the first funding period (usually a year).

For continuing grant program applications, submit these forms before the end of each funding period as required by the grantor agency. Enter in Columns (c) and (d) the estimated amounts of funds which will remain unobligated at the end of the grant funding period only if the Federal grantor agency instructions provide for this. Otherwise, leave these columns blank. Enter in Columns (e) and (f) the amounts of funds needed for the upcoming period. The amount(s) in Column (g) should be the sum of amounts in Columns (e) and (f).

For supplemental grants and changes to existing grants, do not use Columns (c) and (d). Enter in Column (e) the amount of the increase or decrease of Federal funds and enter in Column (f) the amount of the increase or decrease of non-Federal funds. In Column (g) enter the new total budgeted amount (Federal and non-Federal) which includes the total previous authorized budgeted amounts plus or minus, as appropriate, the amounts shown in Columns (e) and (f). The amounts(s) in Column (g) should not equal the sum of amounts in Columns (e) and (f).

Line 5—Show the totals for all columns used.

Section B. Budget Categories

In the column headings (1) through (4), enter the titles of the same programs, functions, and activities shown on Lines 1–4, Column (a), Section A. When additional sheets are prepared for Section A, provide similar column headings on each sheet. For each program, function or activity, fill in the total requirements for funds (both Federal and non-Federal) by object class categories.

Line 6a—i-Show the totals of Lines 6a to 6h in each column.

Line 6j—Show the amount of indirect cost.

Line 6k—Enter the total of amounts on Lines 6i and 6j. For all applications for new grants and continuation grants the total amount in Column (5), Line 6k, should be the same as the total amount shown in Section A, Column (g), Line 5. For supplemental grants and changes to grants, the total amount of the increase or decrease as shown in Columns (1)–(4), Line 6k should be the same as the sum of the amounts in Section A, Columns (e) and (f) on Line 5.

Line 7—Enter the estimated amount of income, if any, expected to be generated from this project. Do not add or subtract this amount from the total project amount. Show under the program narrative statement the nature and source of income. The estimated amount of program income may be considered by the Federal grantor agency in determining the total amount of the grant.

Section C. Non-Federal Resources

Lines 8–11—Enter amounts of non-Federal resources that will be used on the grant. If in-kind contributions are included, provide a brief explanation on a separate sheet.

Column (a)—Enter the program titles identical to Column (a), Section A. A breakdown by function or activity is not necessary.

Column (b)—Enter the contribution to be made by the applicant.

Column (c)—Enter the amount of the State's cash and in-kind contribution if the applicant is not a State or State agency. Applicants which are a State or State agencies should leave this column blank.

Column (d)—Enter the amount of cash and in-kind contributions to be made from all other sources.

Column (e)—Enter totals of Columns (b), (c), and (d).

Line 12—Enter the total for each of Columns (b)–(e). The amount in Column (e) should be equal to the amount on Line 5, Column (f), Section A.

Section D. Forecasted Cash Needs

Line 13—Enter the amount of cash needed by quarter from the grantor agency during the first year.

Line 14—Enter the amount of cash from all other sources needed by quarter during the first year.

Line 15—Enter the totals of amounts on Lines 13 and 14.

Section E. Budget Estimates of Federal Funds Needed for Balance of the Project

Lines 16–19—Enter in Column (a) the same grant program titles shown in Column (a), Section A. A breakdown by function or activity is not necessary. For new applications and continuation grant applications, enter in the proper columns amounts of Federal funds which will be needed to complete the program or project over the succeeding funding periods (usually in years). This section need not be completed for revisions (amendments, changes, or supplements) to funds for the current year of existing grants.

If more than four lines are needed to list the program titles, submit additional schedules as necessary.

Line 20—Enter the total for each of the Columns (b)–(e). When additional schedules are prepared for this Section, annotate accordingly and show the overall totals on this line.

Section F. Other Budget Information

Line 21—Use this space to explain amounts for individual direct object class cost categories that may appear to be out of the ordinary or to explain the details as required by the Federal grantor agency.

Line 22—Enter the type of indirect rate (provisional, predetermined, final or fixed) that will be in effect during the funding period, the estimated amount of the base to which the rate is applied, and the total indirect expense.

Line 23—Provide any other explanations or comments deemed necessary.

Attachment D—Assurances—Non-Construction Programs

Public reporting burden for this collection of information is estimated to average 15 minutes per response, including time for reviewing instructions, searching existing data sources, gathering and maintaining the

data needed, and completing and reviewing the collection of information. Send comments regarding the burden estimate or any other aspect of this collection of information, including suggestions for reducing this burden, to the Office of Management and Budget, Paperwork Reduction Project (0348–0040), Washington, DC 20503.

Please Do not return your completed form to the Office of Management and Budget. Send it to the address provided by the sponsoring agency.

Note: Certain of these assurances may not be applicable to your project or program. If you have questions, please contact the awarding agency. Further, certain Federal awarding agencies may require applicants to certify to additional assurances. If such is the case, you will be notified.

As the duly authorized representative of the applicant, I certify that the applicant:

1. Has the legal authority to apply for Federal assistance and the institutional, managerial and financial capability (including funds sufficient to pay the non-Federal share of project cost) to ensure proper planning, management and completion of the project described in this application.

2. Will give the awarding agency, the Comptroller General of the United States and, if appropriate, the State, through any authorized representative, access to and the right to examine all records, books, papers, or documents related to the award; and will establish a proper accounting system in accordance with generally accepted accounting standards or agency directives.

3. Will establish safeguards to prohibit employees from using their positions for a purpose that constitutes or presents the appearance of personal or organizational conflict of interest, or personal gain.

4. Will initiate and complete the work within the applicable time frame after receipt of approval of the awarding agency.

5. Will comply with the Intergovernmental Personnel Act of 1970 (42 U.S.C. §§ 4728–4763) relating to prescribed standards for merit systems for programs funded under one of the 19 statutes or regulations specified in Appendix A of OPM's Standards for a Merit System of Personnel Administration (5 CFR 900, Subpart F).

6. Will comply with all Federal statutes relating to nondiscrimination. These include but are not limited to: (a) Title VI of the Civil Rights Act of 1964 (Pub. L. 88–352) which prohibits discrimination on the basis of race, color or national origin; (b) Title IX of the Education Amendments of 1972, as amended (20 U.S.C. §§ 1681–1683, and 1685–1686), which prohibits discrimination on the basis of sex; (c) Section 504 of the Rehabilitation Act of 1973, as amended (29 U.S.C. § 794), which prohibits discrimination on the basis of handicaps; (d) the Age Discrimination Act of 1975, as amended (42 U.S.C. §§ 6101–6107), which prohibits discrimination on the basis of age; (e) the Drug Abuse Office and Treatment Act of 1972 (Pub. L. 92–255), as amended, relating to nondiscrimination on the basis of drug abuse; (f) the Comprehensive Alcohol Abuse and Alcoholism Prevention, Treatment and Rehabilitation Act of 1970 (Pub. L. 91–616), as amended, relating to nondiscrimination on the basis of alcohol abuse or alcoholism; (g) §§ 523 and 527 of the Public Health Service Act of 1912 (42 U.S.C. §§ 290 dd–3 and 290 ee 3), as amended, relating to confidentiality of alcohol and drug abuse patient records; (h) Title VIII of the Civil Rights Act of 1968 (42 U.S.C. §§ 3601 *et seq.*), as amended, relating to nondiscrimination in the sale, rental or financing of housing; (i) any other nondiscrimination provisions in the specific statute(s) under which application for Federal assistance is being made; and, (j) the requirements of any other nondiscrimination statute(s) which may apply to the application.

7. Will comply, or has already complied, with the requirements of Titles II and III of the Uniform Relocation Assistance and Real Property Acquisition Policies Act of 1970 (Pub. L. 91–646) which provide for fair and equitable treatment of persons displaced or whose property is acquired as a result of Federal or federally-assisted programs. These requirements apply to all interests in real property acquired for project purposes regardless of Federal participation in purchases.

8. Will comply, as applicable, with provisions of the Hatch Act (5 U.S.C. §§ 1501–1508 and 7324–7328) which limit the political activities of employees whose principal employment activities are funded in whole or in part with Federal funds.

9. Will comply, as applicable, with the provisions of the Davis-Bacon Act (40 U.S.C. §§ 276a to 276a–7), the Copeland Act (40 U.S.C. § 276c and 18 U.S.C. § 874), and the Contract Work Hours and Safety Standards Act (40 U.S.C. §§ 327–333), regarding labor standards for federally-assisted construction subagreements.

10. Will comply, if applicable, with flood insurance purchase requirements of Section 102(a) of the Flood Disaster Protection Act of 1973 (Pub. L. 93–234) which requires recipients in a special flood hazard area to participate in the program and to purchase flood insurance if the total cost of insurable construction and acquisition is $10,000 or more.

11. Will comply with environmental standards which may be prescribed pursuant to the following: (a) institution of environmental quality control measures under the National Environmental Policy Act of 1969 (Pub. L. 91–190) and Executive Order (EO) 11514; (b) notification of violating facilities pursuant to EO 11738; (c) protection of wetlands pursuant to EO 11990; (d) evaluation of flood hazards in floodplains in accordance with EO 11988; (e) assurance of project consistency with the approved State management program developed under the Coastal Zone Management Act of 1972 (16 U.S.C. §§ 1451 *et seq.*); (f) conformity of Federal actions to State (Clean Air) Implementation Plans under Section 176(c) of the Clean Air Act of 1955, as amended (42 U.S.C. §§ 7401 *et seq.*); (g) protection of underground sources of drinking water under the Safe Drinking Water Act of 1974, as amended (Pub. L. 93–523); and, (h) protection of endangered species under the Endangered Species Act of 1973, as amended (Pub. L. 93–205).

12. Will comply with the Wild and Scenic Rivers Act of 1968 (16 U.S.C. §§ 1271 *et seq.*) related to protecting components or potential components of the national wild and scenic rivers system.

13. Will assist the awarding agency in assuring compliance with Section 106 of the National Historic Preservation Act of 1966, as amended (16 U.S.C. § 470), EO 11593 (identification and protection of historic properties), and the Archaeological and Historic Preservation Act of 1974 (16 U.S.C. §§ 469a–1 *et seq.*).

14. Will comply will Pub. L. 93–348 regarding the protection of human subjects involved in research, development, and related activities supported by this award of assistance.

15. Will comply with the Laboratory Animal Welfare Act of 1966 (Pub. L. 89–544, as amended, 7 U.S.C. §§ 2131 *et seq.*) pertaining to the care, handling, and treatment of warm blooded animals held for research, teaching, or other activities supported by this award of assistance.

16. Will comply with the Lead-Based Paint Poisoning Prevention Act (42 U.S.C. §§ 4801 *et seq.*) which prohibits the use of lead-based paint in construction or rehabilitation of residence structures.

17. Will cause to be performed the required financial and compliance audits in accordance with the Single Audit Act Amendments of 1996 and OMB Circular No. A–133, ''Audits of States, Local Governments, and Non-Profit Organizations.''

18. Will comply with all applicable requirements of all other Federal laws, executive orders, regulations, and policies governing this program.

Signature of Authorized Certifying Official

_____

Title

_____

Applicant Organization

_____

Date Submitted

_____

Attachment E—Certification Regarding Drug-Free Workplace Requirements

This certification is required by the regulations implementing the Drug-Free Workplace Act of 1988: 45 CFR Part 76, Subpart F, Sections 76.630(c) and (d)(2) and 76.645(a)(1) and (b) provide that a Federal agency may designate a central receipt point for STATE-WIDE AND STATE AGENCY-WIDE certifications, and for notification of criminal drug convictions. For the Department of Health and Human Services, the central point is: Division of Grants Management and Oversight, Office of Management and Acquisition, Department of Health and Human Services, Room 517–D, 200 Independence Avenue, SW., Washington, DC 20201.

Certification Regarding Drug-Free Workplace Requirements (Instructions for Certification)

1. By signing and/or submitting this application or grant agreement, the grantee is providing the certification set out below.

2. The certification set out below is a material representation of fact upon which reliance is placed when the agency awards

the grant. If it is later determined that the grantee knowingly rendered a false certification, or otherwise violates the requirements of the Drug-Free Workplace Act, the agency, in addition to any other remedies available to the Federal Government, may take action authorized under the Drug-Free Workplace Act.

3. For grantees other than individuals, Alternate I applies.

4. For grantees who are individuals, Alternate II applies.

5. Workplaces under grants, for grantees other than individuals, need not be identified on the certification. If known, they may be identified in the grant application. If the grantee does not identify the workplaces at the time of application, or upon award, if there is no application, the grantee must keep the identity of the workplace(s) on file in its office and make the information available for Federal inspection. Failure to identify all known workplaces constitutes a violation of the grantee's drug-free workplace requirements.

6. Workplace identifications must include the actual address of buildings (or parts of buildings) or other sites where work under the grant takes place. Categorical descriptions may be used (*e.g.,* all vehicles of a mass transit authority or State highway department while in operation, State employees in each local unemployment office, performers in concert halls or radio studios).

7. If the workplace identified to the agency changes during the performance of the grant, the grantee shall inform the agency of the change(s), if it previously identified the workplaces in question (see paragraph five).

8. Definitions of terms in the Nonprocurement Suspension and Debarment common rule and Drug-Free Workplace rule apply to this certification. Grantee's attention is called, in particular, to the following definitions from these rules:

Controlled substance means a controlled substance in Schedules I through V of the Controlled Substances Act (21 U.S.C. 812) and as further defined by regulation (21 CFR 1308.11 through 1308.15);

Conviction means a finding of guilt (including a plea of nolo contendere) or imposition of sentence, or both, by any judicial body charged with the responsibility to determine violations of the Federal or State criminal drug statutes;

Criminal drug statute means a Federal or non-Federal criminal statute involving the manufacture, distribution, dispensing, use, or possession of any controlled substance;

Employee means the employee of a grantee directly engaged in the performance of work under a grant, including: (i) All direct charge employees; (ii) All indirect charge employees unless their impact or involvement is insignificant to the performance of the grant; and, (iii) Temporary personnel and consultants who are directly engaged in the performance of work under the grant and who are on the grantee's payroll. This definition does not include workers not on the payroll of the grantee (*e.g.,* volunteers, even if used to meet a matching requirement; consultant or independent contractors not on the grantee's payroll; or employees or subrecipients or subcontractors in covered workplaces).

Certification Regarding Drug-Free Workplace Requirements

Alternate I. (Grantees Other Than Individuals)

The grantee certifies that it will or will continue to provide a drug-free workplace by:

(a) Publishing a statement notifying employees that the unlawful manufacture, distribution, dispensing, possession, or use of a controlled substance is prohibited in the grantee's workplace and specifying the actions that will be taken against employees for violation of such prohibition;

(b) Establishing an ongoing drug-free awareness program to inform employees about—

(1) The dangers of drug abuse in the workplace;

(2) The grantee's policy of maintaining a drug-free workplace;

(3) Any available drug counseling, rehabilitation, and employee assistance programs; and

(4) The penalties that may be imposed upon employees for drug abuse violations occurring in the workplace;

(c) Making it a requirement that each employee to be engaged in the performance of the grant be given a copy of the statement required by paragraph (a);

(d) Notifying the employee in the statement required by paragraph (a) that, as a condition of employment under the grant, the employee will—

(1) Abide by the terms of the statement; and

(2) Notify the employer in writing of his or her conviction for a violation of a criminal drug statute occurring in the workplace no later than five calendar days after such conviction;

(e) Notifying the agency in writing, within ten calendar days after receiving notice under paragraph (d)(2) from an employee or otherwise receiving actual notice of such conviction. Employers of convicted employees must provide notice, including position title, to every grant officer or other designee on whose grant activity the convicted employee was working, unless the Federal agency has designated a central point for the receipt of such notices. Notice shall include the identification number(s) of each affected grant;

(f) Taking one of the following actions, within 30 calendar days of receiving notice under paragraph (d)(2), with respect to any employee who is so convicted—

(1) Taking appropriate personnel action against such an employee, up to and including termination, consistent with the requirements of the Rehabilitation Act of 1973, as amended; or

(2) Requiring such employee to participate satisfactorily in a drug abuse assistance of rehabilitation program approved for such purposes by a Federal, State, or local health, law enforcement, or other appropriate agency;

(g) Making a good faith effort to continue to maintain a drug-free workplace through implementation of paragraphs (a), (b), (c), (d), (e) and (f).

(B) The grantee may insert in the space provided below the site(s) for the performance or work done in connection with the specific grant:

Place of Performance (Street address, city, county, state, zip code).

Check if there are workplaces on file that are not identified here.

Alternate II. (Grantees Who Are Individuals)

(a) The grantee certifies that, as a condition of the grant, he or she will not engage in the unlawful manufacture, distribution, dispensing, possession, or use of a controlled substance in conducting any activity with the grant;

(b) If convicted or a criminal drug offense resulting from a violation occurring during the conduct of any grant activity, he or she will report the conviction, in writing, within 10 calendar days of the conviction, to every grant officer or other designee, unless the Federal agency designates a central point for the receipt of such notices. When notice is made to such a central point, it shall include the identification number(s) of each affected grant.

Attachment F—Certification Regarding Debarment, Suspension and Other Responsibility Matters

Certification Regarding Debarment, Suspension, and Other Responsibility Matters—Primary Covered Transactions

Instructions for Certification

1. By signing and submitting this proposal, the prospective primary participant is providing the certification set out below.

2. The inability of a person to provide the certification required below will not necessarily result in denial of participation in this covered transaction. The prospective participant shall submit an explanation of why it cannot provide the certification set out below. The certification or explanation will be considered in connection with the department or agency's determination whether to enter into this transaction. However, failure of the prospective primary participant to furnish a certification or an explanation shall disqualify such person from participation in this transaction.

3. The certification in this clause is a material representation of fact upon which reliance was placed when the department or agency determined to enter into this transaction. If it is later determined that the prospective primary participant knowingly rendered an erroneous certification, in addition to other remedies available to the Federal Government, the department or agency may terminate this transaction for cause or default.

4. The prospective primary participant shall provide immediate written notice to the department or agency to which this proposal is submitted if at any time the prospective primary participant learns that its certification was erroneous when submitted or has become erroneous by reason of changed circumstances.

5. The terms covered transaction, debarred, suspended, ineligible, lower tier covered transaction, participant, person, primary covered transaction, principal, proposal, and voluntarily excluded, as used in this clause, have the meanings set out in the Definitions and Coverage sections of the rules

implementing Executive Order 12549. You may contact the department or agency to which this proposal is being submitted for assistance in obtaining a copy of those regulations.

6. The prospective primary participant agrees by submitting this proposal that, should the proposed covered transaction be entered into, it shall not knowingly enter into any lower tier covered transaction with a person who is proposed for debarment under 48 CFR part 9, subpart 9.4, debarred, suspended, declared ineligible, or voluntarily excluded from participation in this covered transaction, unless authorized by the department or agency entering into this transaction.

7. The prospective primary participant further agrees by submitting this proposal that it will include the clause titled ''Certification Regarding Debarment, Suspension, Ineligibility and Voluntary Exclusion-Lower Tier Covered Transaction,'' provided by the department or agency entering into this covered transaction, without modification, in all lower tier covered transactions and in all solicitations for lower tier covered transactions.

8. A participant in a covered transaction may rely upon a certification of a prospective participant in a lower tier covered transaction that it is not proposed for debarment under 48 CFR part 9, subpart 9.4, debarred, suspended, ineligible, or voluntarily excluded from the covered transaction, unless it knows that the certification is erroneous. A participant may decide the method and frequency by which it determines the eligibility of its principals. Each participant may, but is not required to, check the List of Parties Excluded from Federal Procurement and Nonprocurement Programs.

9. Nothing contained in the foregoing shall be construed to require establishment of a system of records in order to render in good faith the certification required by this clause. The knowledge and information of a participant is not required to exceed that which is normally processed by a prudent person in the ordinary course of business dealings.

10. Except for transactions authorized under paragraph 6 of these instructions, if a participant in a covered transaction knowingly enters into a lower tier covered transaction with a person who is proposed for debarment under 48 CFR part 9, subpart 9.4, suspended, debarred, ineligible, or voluntarily excluded from participation in this transaction, in addition to other remedies available to the Federal Government, the department or agency may terminate this transaction for cause or default.

Certification Regarding Debarment, Suspension, and Other Responsibility Matters—Primary Covered Transactions

(1) The prospective primary participant certifies to the best of its knowledge and belief, that it and its principals:

(a) Are not presently debarred, suspended, proposed for debarment, declared ineligible, or voluntarily excluded by any Federal Department or agency;

(b) Have not within a three-year period preceding this proposal been convicted of or had a civil judgment rendered against them for commission of fraud or a criminal offense in connection with obtaining, attempting to obtain, or performing a public (Federal, State or local) transaction or contract under a public transaction; violation of Federal or State antitrust statutes or commission of embezzlement, theft, forgery, bribery, falsification or destruction of records, making false statements, or receiving stolen property;

(c) Are not presently indicted for or otherwise criminally or civilly charged by a governmental entity (Federal, State or local) with commission of any of the offenses enumerated in paragraph (1)(b) of this certification; and

(d) Have not within a three-year period preceding this application/proposal had one or more public transactions (Federal, State or local) terminated for cause or default.

(2) Where the prospective primary participant is unable to certify to any of the statements in this certification, such prospective participant shall attach an explanation to this proposal.

Certification Regarding Debarment, Suspension, Ineligibility and Voluntary Exclusion—Lower Tier Covered Transactions

Instructions for Certification

1. By signing and submitting this proposal, the prospective lower tier participant is providing the certification set out below.

2. The certification in this clause is a material representation of fact upon which reliance was placed when this transaction was entered into. If it is later determined that the prospective lower tier participant knowingly rendered an erroneous certification, in addition to other remedies available to the Federal Government the department or agency with which this transaction originated may pursue available remedies, including suspension and/or debarment.

3. The prospective lower tier participant shall provide immediate written notice to the person to which this proposal is submitted if at any time the prospective lower tier participant learns that its certification was erroneous when submitted or had become erroneous by reason of changed circumstances.

4. The terms covered transaction, debarred, suspended, ineligible, lower tier covered transaction, participant, person, primary covered transaction, principal, proposal, and voluntarily excluded, as used in this clause, have the meaning set out in the Definitions and Coverage sections of rules implementing Executive Order 12549. You may contact the person to which this proposal is submitted for assistance in obtaining a copy of those regulations.

5. The prospective lower tier participant agrees by submitting this proposal that, [[Page 33043]] should the proposed covered transaction be entered into, it shall not knowingly enter into any lower tier covered transaction with a person who is proposed for debarment under 48 CFR part 9, subpart 9.4, debarred, suspended, declared ineligible, or voluntarily excluded from participation in this covered transaction, unless authorized by the department or agency with which this transaction originated.

6. The prospective lower tier participant further agrees by submitting this proposal that it will include this clause titled ''Certification Regarding Debarment, Suspension, Ineligibility and Voluntary Exclusion-Lower Tier Covered Transaction,'' without modification, in all lower tier covered transactions and in all solicitations for lower tier covered transactions.

7. A participant in a covered transaction may rely upon a certification of a prospective participant in a lower tier covered transaction that it is not proposed for debarment under 48 CFR part 9, subpart 9.4, debarred, suspended, ineligible, or voluntarily excluded from covered transactions, unless it knows that the certification is erroneous. A participant may decide the method and frequency by which it determines the eligibility of its principals. Each participant may, but is not required to, check the List of Parties Excluded from Federal Procurement and Nonprocurement Programs.

8. Nothing contained in the foregoing shall be construed to require establishment of a system of records in order to render in good faith the certification required by this clause.

The knowledge and information of a participant is not required to exceed that which is normally possessed by a prudent person in the ordinary course of business dealings.

9. Except for transactions authorized under paragraph 5 of these instructions, if a participant in a covered transaction knowingly enters into a lower tier covered transaction with a person who is proposed for debarment under 48 CFR part 9, subpart 9.4, suspended, debarred, ineligible, or voluntarily excluded from participation in this transaction, in addition to other remedies available to the Federal Government, the department or agency with which this transaction originated may pursue available remedies, including suspension and/or debarment.

Certification Regarding Debarment, Suspension, Ineligibility an Voluntary Exclusion—Lower Tier Covered Transactions

(1) The prospective lower tier participant certifies, by submission of this proposal, that neither it nor its principals is presently debarred, suspended, proposed for debarment, declared ineligible, or voluntarily excluded from participation in this transaction by any Federal department or agency.

(2) Where the prospective lower tier participant is unable to certify to any of the statements in this certification, such prospective participant shall attach an explanation to this proposal.

Attachment G—Intergovernmental Review (SPOC List)

It is estimated that in 2001 the Federal Government will outlay $305.6 billion in grants to State and local governments. Executive Order 12372, ''Intergovernmental Review of Federal Programs,'' was issued with the desire to foster the intergovernmental partnership and

strengthen federalism by relying on State and local processes for the coordination and review of proposed Federal financial assistance and direct Federal development. The Order allows each State to designate an entity to perform this function. Below is the official list of those entities. For those States that have a home page for their designated entity, a direct link has been provided below.

States that are not listed on this page have chosen not to participate in the intergovernmental review process, and therefore do not have a SPOC. If you are located within one of these States, you may still send application materials directly to a Federal awarding agency.

Contact information for Federal agencies that award grants can be found in Appendix IV of the Catalog of Federal Domestic Assistance.

Arkansas

Tracy L. Copeland, Manager, State Clearinghouse, Office of Intergovernmental Services, Department of Finance and Administration, 1515 W. 7th St., Room 412, Little Rock, Arkansas 72203, Telephone: (501) 682–1074, Fax: (501) 682–5206, tlcopeland@dfa.state.ar.us

California

Grants Coordination, State Clearinghouse, Office of Planning and Research, P.O. Box 3044, Room 222, Sacramento, California 95812–3044, Telephone; (916) 445–0613, Fax: (916) 323–3018, state.clearinghouse@opr.ca.gov

Delaware

Charles H. Hopkins, Executive Department, Office of the Budget, 540 S. Dupont Highway, 3rd Floor, Dover, Delaware 19901, Telephone: (302) 739–3323, Fax: (302) 739–5661, chopkins@state.de.us

District of Columbia

Luisa Montero-Diaz, Office of Partnerships and Grants, Development, Executive Office of the Mayor, District of Columbia Government, 441 4th Street, NW., Suite 530 South, Washington, DC 20001, Telephone: (202) 727–8900, Fax: (202) 727–1652, opgd.eom@dc.gov

Florida

Jasmin Raffington, Florida State Clearinghouse, Department of Community Affairs, 2555 Shumard Oak Blvd, Tallahassee, Florida 32399–2100, Telephone: (850) 922–5438, Fax: (850) 414–0479, clearinghouse@dca.state.fl.us

Georgia

Georgia State Clearinghouse, 270 Washington Street, SW., Atlanta, Georgia 30334, Telephone: (404) 656–3855, Fax: (404) 656–7901, gach@mail.opb.state.ga.us

Illinois

Virginia Bova, Department of Commerce and Community Affairs, James R. Thompson Center, 100 West Randolph, Suite 3–400, Chicago, Illinois 60601, Telephone: (312) 814–6028, Fax (312) 814–8485, vbova@commerce.state.il.us

Iowa

Steven R. McCann, Division of Community and Rural Development, Iowa Department of Economic Development, 200 East Grand Avenue, Des Moines, Iowa 50309, Telephone: (515) 242–4719, Fax: (515) 242–4809, steve.mccann@ided.state.ia.us

Kentucky

Ron Cook, Department for Local Government, 1024 Capital Center Drive, Suite 340, Frankfort, Kentucky 40601, Telephone: (502) 573–2382, Fax: (502) 573–2512, ron.cook@mail.state.ky.us

Maine

Joyce Benson, State Planning Office, 184 State Street, 38 State House Station, Augusta, Maine 04333, Telephone: (207) 287–3261, (207) 287–1461 (direct) Fax: (207) 287–6489, joyce.benson@state.me.us

Maryland

Linda Janey, Manager, Clearinghouse and Plan Review Unit, Maryland Office of Planning, 301 West Preston Street—Room 1104, Baltimore, Maryland 21201–2305, Telephone: (410) 767–4490, Fax: (410) 767–4480, linda@mail.op.statae.md.us

Michigan

Richard Pfaff, Southeast Michigan Council of Governments, 535 Griswold, Suite 300, Detroit, Michigan 48226, Telephone: (313) 961–4266, Fax: (313) 961–4869, pfaff@semcog.org

Mississippi

Cathy Mallette, Clearinghouse Officer, Department of Finance and Administration, 1301 Woolfolk Building, Suite E, 501 North West Street, Jackson, Mississippi 39201, Telephone: (601) 359–6762, Fax: (601) 359–6758

Missouri

Angela Boessen, Federal Assistance Clearinghouse, Office of Administration, P.O. Box 809, Truman Building, Room 840, Jefferson City, Missouri 65102, Telephone: (573) 751–4834, Fax: (573) 522–4395 igr@mail.oa.state.mo.us

Nevada

Heather Elliott, Department of Administration, State Clearinghouse, 209 E. Musser Street, Room 200, Carson City, Nevada 89701, Telephone: (775) 684–0209, Fax: (775) 684–0260, helliott@govmail.state.nv.us

New Hampshire

Jeffrey H. Taylor, Director, New Hampshire Office of State Planning, Attn: Intergovernmental Review Process, Mike Blake, 2½ Beacon Street, Concord, New Hampshire 03301, Telephone: (603) 271–2155, Fax: (603) 271–1728, jtaylor@osp.state.nh.us

New Mexico

Ken Hughes, Local Government Division, Room 201 Bataan Memorial Building, Santa Fe, New Mexico 87503, Telephone: (505) 827–4370, Fax: (505) 827–4948, khughes@dfa.state.nm.us

North Carolina

Jeanette Furney, Department of Administration, 1302 Mail Service Center, Raleigh, North Carolina 27699–1302, Telephone: (919) 807–2323, Fax: (919) 733–9571, jeanette.furney@ncmail.net

North Dakota

Jim Boyd, Division of Community Services, 600 East Boulevard Ave, Dept 105, Bismarck, North Dakota 58505–0170, Telephone: (701) 328–2094, Fax: (701) 328–2308, jboyd@state.nd.us

Rhode Island

Kevin Nelson, Department of Administration, Statewide Planning Program, One Capitol Hill, Providence, Rhode Island 02908–5870, Telephone: (401) 222–2093, Fax: (401) 222–2083 knelson@doa.state.ri.us

South Carolina

Omeagia Burgess, Budget and Control Board, Office of State Budget, 1122 Ladies Street, 12th Floor, Columbia, South Carolina 29201, Telephone: (803) 734–0494, Fax: (803) 734–0645, aburgess@budget.state.sc.us

Texas

Denise S. Francis, Director, State Grants Team, Governor's Office of Budget and Planning, P.O. Box 12428, Austin, Texas 78711, Telephone: (512) 305–9415, Fax: (512) 936–2681, dfrancis@governor.state.tx.us

Utah

Carolyn Wright, Utah State Clearinghouse, Governor's Office of Planning and Budget, State Capitol, Room 114, Salt Lake City, Utah 84114, Telephone: (801) 538–1535, Fax: (801) 538–1547, cwright@gov.state.ut.us

West Virginia

Fred Cutlip, Director, Community Development Division, West Virginia Development Office, Building #6, Room 553, Charleston, West Virginia 25305, Telephone: (304) 558–4010, Fax: (304) 558–3248, fcutlip@wvdo.org

Wisconsin

Jeff Smith, Section Chief, Federal/State Relations, Wisconsin Department of Administration, 101 East Wilson Street–6th Floor, P.O. Box 7868, Madison, Wisconsin 53707, Telephone: (608) 266–0267, Fax: (608) 267–6931, jeffrey.smith@doa.stae.wi.us

American Samoa

Pat M. Galea'i, Federal Grants/Programs Coordinator, Office of Federal Programs, Office of the Governor/Department of Commerce, American Samoa Government, Pago Pago, American Samoa 96799, Telephone: (684) 633–5155, Fax: (684) 633–4195, pmgaleai@samoatelco.com

Guam

Director, Bureau of Budget and Management Research, Office of the Governor, P.O. Box 2950, Agana, Guam 95910, Telephone: 011–671–472–2285, Fax: 011–472–2825, jer@ns.gov.gu

Puerto Rico

Jose Caballero/Mayra Silva, Puerto Rico Planning Board, Federal Proposals Review Office, Minillas Government Center, P.O. Box 41119, San Juan, Puerto Rico 00940–1119, Telephone: (787) 723–6190, Fax: (787) 722–6783

North Mariana Islands

Ms. Jacoba T. Seman, Federal Programs Coordinator, Office of Management and Budget, Office of the Governor, Saipan, MP 96950, Telephone: (670) 664–2289, Fax: (670) 664–2272, omb.jseman@saipan.com

Virgin Islands

Ira Mills, Director, Office of Management and Budget, #41 Norre Gade Emancipation Garden Station, Second Floor, Saint Thomas, Virgin Islands 00802, Telephone: (340) 774–0750, Fax: (340) 776–0069, Irmills@usvi.org

Changes to this list can be made only after OMB is notified by a State's officially designated representative. E-mail messages can be sent to grants@omb.eop.gov. If you prefer, you may send correspondence to the following postal address: Attn: Grants Management, Office of Management and Budget, New Executive Office Building, Suite 6025, 725 17th Street, NW., Washington, DC 20503.

Please note: Inquiries about obtaining a Federal grant should not be sent to the OMB e-mail or postal address shown above. The best source for this information is the CFDA.

BILLING CODE 4184–01–C

Attachment H—Certification Regarding Lobbying

Certification for Contracts, Grants, Loans, and Cooperative Agreements

The undersigned certifies, to the best of his or her knowledge and belief, that:

(1) No Federal appropriated funds have been paid or will be paid, by or on behalf of the undersigned, to any person for influencing or attempting to influence an officer or employee of an agency, a Member of Congress, an officer of employee of Congress, or an employee of a Member of Congress in connection with awarding of any Federal contract, the making of any Federal grant, the making of any Federal loan, the entering into of any cooperative agreement, and the extension, continuation, renewal, amendment, or modification of any Federal contract, grant, loan, or cooperative agreement.

(2) If any funds other than Federal appropriated funds have been paid or will be paid to any person for influencing or attempting to influence an officer or employee of any agency, a Member of Congress, an officer or employee of Congress, or an employee of a Member of Congress in connection with this Federal contract, grant, loan, or cooperative agreement, the undersigned shall complete and submit Standard Form-LLL, ''Disclosure Form to Report Lobbying,'' in accordance with its instructions.

(3) The undersigned shall require that the language of this certification be included in the award documents for all subawards at all tiers (including subcontracts, subgrants, and contract under grants, loans, and cooperative agreements) and that all subrecipients shall certify and disclose accordingly. This certification is a material representation of fact upon which reliance was placed when this transaction was made or entered into. Submission of this certification is a prerequisite for making or entering into this transaction imposed by section 1352, title 31, U.S. Code. Any person who fails to file the required certification shall be subject to a civil penalty of not less than $10,000 and not more than $100,000 for each such failure.

Statement for Loan Guarantees and Loan Insurance

The undersigned states, to the best of his or her knowledge and belief, that:

If any funds have been paid or will be paid to any person for influencing or attempting to influence an officer or employee of any agency, a Member of Congress, an officer or employee of Congress, or an employee of a Member of Congress in connection with this commitment providing for the United States to insure or guarantee a loan, the undersigned shall complete and submit Standard Form–LLL, ''Disclosure Form to Report Lobbying,'' in accordance with its instructions. Submission of this statement is a prerequisite for making or entering into this transaction imposed by section 1352, title 31, U.S. Code. Any person who fails to file the required statement shall be subject to a civil penalty of not less than $10,000 and not more than $100,000 for each such failure.

Signature

Title

Organization

BILLING CODE 4184–01–M

Attachment H, page 2

DISCLOSURE OF LOBBYING ACTIVITIES

Approved by OMB 0348-0046

Complete this form to disclose lobbying activities pursuant to 31 U.S.C. 1352
(See reverse for public burden disclosure.)

1. Type of Federal Action:	2. Status of Federal Action:	3. Report Type:
☐ a. contract b. grant c. cooperative agreement d. loan e. loan guarantee f. loan insurance	☐ a. bid/offer/application b. initial award c. post-award	☐ a. initial filing b. material change **For Material Change Only:** year _____ quarter _____ date of last report _____

4. Name and Address of Reporting Entity:	5. If Reporting Entity in No. 4 is a Subawardee, Enter Name and Address of Prime:
☐ Prime ☐ Subawardee Tier _____, *if known*: Congressional District, *if known*:	Congressional District, *if known*:
6. Federal Department/Agency:	**7. Federal Program Name/Description:** CFDA Number, *if applicable*: _____
8. Federal Action Number, *if known*:	**9. Award Amount,** *if known*: $
10. a. Name and Address of Lobbying Registrant (*if individual, last name, first name, MI*):	**b. Individuals Performing Services** (*including address if different from No. 10a*) (*last name, first name, MI*):
11. Information requested through this form is authorized by title 31 U.S.C. section 1352. This disclosure of lobbying activities is a material representation of fact upon which reliance was placed by the tier above when this transaction was made or entered into. This disclosure is required pursuant to 31 U.S.C. 1352. This information will be reported to the Congress semi-annually and will be available for public inspection. Any person who fails to file the required disclosure shall be subject to a civil penalty of not less that $10,000 and not more than $100,000 for each such failure.	Signature: _____ Print Name: _____ Title: _____ Telephone No.: _____ Date: _____
Federal Use Only:	Authorized for Local Reproduction Standard Form LLL (Rev. 7-97)

BILLING CODE 4184–01–C

Attachment H—Instructions for Completion of SF–LLL Disclosure of Lobbying Activities

This disclosure form shall be completed by the reporting entity, whether subawardee or prime Federal recipient, at the initiation or receipt of a covered Federal action, or a material change to a previous filing, pursuant to title 31 U.S.C. section 1352. The filing of a form is required for each payment or agreement to make payment to any lobbying entity for influencing or attempting to influence an officer or employee of any agency, a Member of Congress, an officer or employee of Congress, or an employee of a Member of Congress in connection with a covered Federal action. Complete all items that apply for both the initial filing and material change report. Refer to the implementing guidance published by the Office of Management and Budget for additional information.

1. Identify the type of covered Federal action for which lobbying activity is and/or has been secured to influence the outcome of a covered Federal action.

2. Identify the status of the covered Federal action.

3. Identify the appropriate classification of this report. If this is a followup report caused by a material change to the information previously reported, enter the year and quarter in which the change occurred. Enter the date of the last previously submitted report by this reporting entity for this covered Federal action.

4. Enter the full name, address, city, State and zip code of the reporting entity. Include Congressional District, if known. Check the appropriate classification of the reporting entity that designates if it is, or expects to be, a prime or subaward recipient. Identify the tier of a subawardee, e.g., the first subawardee of the prime is the 1st tier. Subawards include but are not limited to subcontracts, subgrants and contract awards under grants.

5. If the organization filing the report in item 4 checks ''Subawardee,'' then enter the full name, address, city, State and zip code of the prime Federal recipient. Include Congressional District, if known.

6. Enter the name of the Federal agency making the award or loan commitment.

Include at least one organizational level below agency name, if known. For example, Department of Transportation, United States Coast Guard.

7. Enter the Federal program name or description for the covered Federal action (item 1). If known, enter the full Catalog of Federal Domestic Assistance (CFDA) number for grants, cooperative agreements, loans, and loan commitments.

8. Enter the most appropriate Federal identifying number available for the Federal action identified in item 1 (e.g., Request for Proposal (RFP) number; Invitation for Bid (IFB) number; grant announcement number; the contract, grant, or loan award number; the application/proposal control number assigned by the Federal agency). Include prefixes, e.g., ''RFP–DE–90–001.''

9. For a covered Federal action where there has been an award or loan commitment by the Federal agency, enter the Federal amount of the award/loan commitment for the prime entity identified in item 4 or 5.

10. (a) Enter the full name, address, city, State and zip code of the lobbying registrant under the Lobbying Disclosure Act of 1995 engaged by the reporting entity identified in item 4 to influence the covered Federal action.

(b) Enter the full names of the individual(s) performing services, and include full address if different from 10(a). Enter Last Name, First Name, and Middle Initial (MI).

11. The certifying official shall sign and date the form, print his/her name, title, and telephone number.

According to the Paperwork Reduction Act, as amended, no persons are required to respond to a collection of information unless it displays a valid OMB Control Number. The valid OMB control number for this information collection is OMB No. 0348–0046. Public reporting burden for this collection of information is estimated to average 10 minutes per response, including time for reviewing instructions, searching existing data sources, gathering and maintaining the data needed, and completing and reviewing the collection of information. Send comments regarding the burden estimate or any other aspect of this collection of information, including suggestions for reducing this burden, to the Office of Management and Budget, Paperwork Reduction Project (0348–0046), Washington, DC 20503.

BILLING CODE 4184–01–M

APPLICANT'S CHECKLIST

Attachment I

This checklist will assist you with preparing and assembling your application. Completing the checklist can help ensure that you do not omit key information. Because this checklist is used by many ACF programs, some of the information might not apply to your application. This checklist DOES NOT have to be completed and returned with your application.

	Yes	Included	N/A
Authorizing official read and understood Certification Regarding Debarment, Suspension, and Other Responsibility Matters?			
Authorizing official read and understood Certification Regarding Drug-Free Workplace Requirements--Grantees Other Than Individuals?			
Authorizing official read and understood Certification Regarding Environmental Tobacco Smoke?			
Application for Federal Assistance (SF 424) was completed? Proper Signature and Date for Line 18?			
Budget Information--Non-Construction Programs (SF 424A) or Budget Information--Construction Programs (SF 424C) was completed?			
Assurances-- Non-Construction Programs (SF 424B) or Assurances--Construction Programs (SF 424D) was completed? (Proper Signature and Date?)			
Certification Regarding Lobbying was completed? (Proper Signature and Date?)			
Disclosure of Lobbying Activities was completed? (Proper Signature and Date?)			
Other special certifications, assurances, and/or disclosures required under the program were completed (e.g., maintenance of effort certification)?			
Proof of nonprofit status was provided?			
Has additional information such as biographical sketch(es) with job description(s) and other additional information been attached, when required?			
For a Supplemental application, does the detailed budget only address the additional funds requested?			
Checked all budget computations for accuracy?			

FOLLOW-UP QUESTIONS

	YES	N/A
On the Application for Federal Assistance (SF 424),		
⇒ did you enter the application number issued by the sponsoring ACF office in the "Federal Identifier" block?		
⇒ did you type the 12 digit Payee EIN or PIN previously assigned to your organization by DHHS in the "Federal Identifier" block?		
⇒ is the EIN in Item #6 assigned to the organization and organizational unit named in Item #5?		
⇒ did you include city, county, state and zip code of the applicant did organization in Item #5?		
⇒ has the appropriate box been checked in Item #16?		
⇒ has the entire proposed project period been identified in Item #13?		
On the Budget Information form (SF 424A or SF 424C),		
⇒ do the totals in Section B match the totals provided in the budget and budget narrative?		

SUGGESTED ORDERING OF APPLICATION MATERIALS

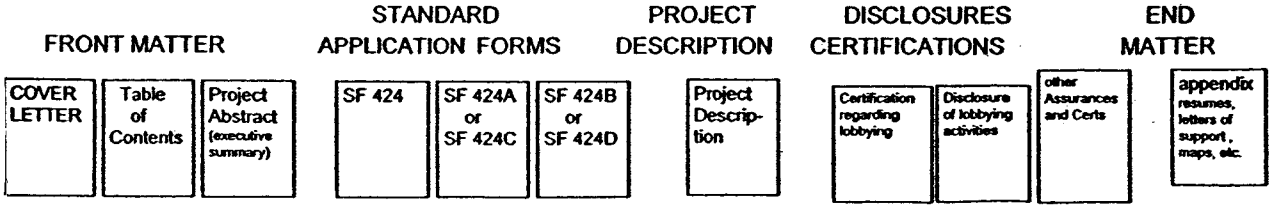

BILLING CODE 4184–01–C

Attachment J—Certification Regarding Environmental Tobacco Smoke

Public Law 103227, Part C Environmental Tobacco Smoke, also known as the Pro Children Act of 1994, requires that smoking not be permitted in any portion of any indoor routinely owned or leased or contracted for by an entity and used routinely or regularly for provision of health, day care, education,

or library services to children under the age of 18, if the services are funded by Federal programs either directly or through State or local governments, by Federal grant, contract, loan, or loan guarantee. The law does not apply to children's services provided in private residences, facilities funded solely by Medicare or Medicaid funds, and portions of facilities used for inpatient drug or alcohol treatment. Failure to comply with the provisions of the law may result in the imposition of a civil monetary penalty of up to $1000 per day and/or the imposition of an administrative compliance order on the responsible entity. By signing and submitting this application the applicant/grantee certifies that it will comply with the requirements of the Act.

The applicant/grantee further agrees that it will require the language of this certification be included in any subawards which contain provisions for the children's services and that all subgrantees shall certify accordingly.

Attachment K—DHHS Regulations Applying to All Applicants/Grantees Under the Community Economic Development Program—Special Initiatives

Title 45 of the Code of Federal Regulations

Part 16—Department of Grant Appeals Process

Part 74—Administration of Grants (grants and subgrants to entities)

Part 75—Informal Grant Appeal Procedures

Part 76—Debarment and Suspension from Eligibility for Financial Assistance

Subpart F—Drug Free Workplace Requirements

Part 80—Non-Discrimination Under Programs Receiving Federal Assistance through the Department of Health and Human Services Effectuation of Title VI of the Civil Rights Act Of 1964

Part 81—Practice and Procedures for Hearings Under Part 80 of this Title

Part 83—Regulation for the Administration and Enforcement of Sections 799A and 845 of the Public Health Service Act

Part 84—Non-discrimination on the Basis of Handicap in Programs and Activities Receiving Federal Financial Assistance

Part 85—Enforcement of Non-Discrimination on the Basis of Handicap in Programs or Activities Conducted by the Department of Health and Human Services

Part 86—Nondiscrimination on the Basis of Sex in Education Programs and Activities Receiving or Benefiting from Federal Financial Assistance

Part 91—Non-discrimination on the Basis of Age in Health and Human Services Programs or Activities Receiving Federal Financial Assistance

Part 92—Uniform Administrative Requirements for Grants and Cooperative Agreements to States and Local Governments (**Federal Register**, March 11, 1988)

Part 93—New Restrictions on Lobbying

Part 100—Intergovernmental Review of Department of Health and Human Services Programs and Activities

[FR Doc. 02–19770 Filed 8–7–02; 8:45 am]

BILLING CODE 4184–01–M

Federal Register

Thursday,
August 8, 2002

Part IV

Department of Agriculture

7 CFR Part 930

Tart Cherries Grown in the States of Michigan, New York, Pennsylvania, Oregon, Utah, Washington and Wisconsin; Order Amending Marketing Agreement and Order No. 930; Final Rule

DEPARTMENT OF AGRICULTURE

Agricultural Marketing Service

7 CFR Part 930

[Docket Nos. AO–370–A7; FV00–930–1]

Tart Cherries Grown in the States of Michigan, New York, Pennsylvania, Oregon, Utah, Washington and Wisconsin; Order Amending Marketing Agreement and Order No. 930

AGENCY: Agricultural Marketing Service, USDA.

ACTION: Final rule.

SUMMARY: This final rule amends the marketing agreement and order for tart cherries grown in Michigan, New York, Pennsylvania, Oregon, Utah, Washington and Wisconsin. The amendments are based on those proposed by the Cherry Industry Administrative Board (Board), which is responsible for local administration of the order. The amendments include making districts producing more than 6 million pounds per year subject to volume regulations (rather than 15 million pounds); making shipments of cherry juice and juice concentrate to certain markets eligible to receive diversion credit; changing provisions related to alternate Board members serving for absent members at Board meetings; making all processed cherries subject to assessments; and eliminating the requirement that different assessment rates be established for different cherry products. Remaining amendments pertain to allocation of Board membership; clarification of order provisions relating to exemption and diversion; release of cherries in the inventory reserve; and the use of crop estimates other than the official USDA crop estimate in developing the Board's marketing policy. The amendments are intended to improve the operation and functioning of the tart cherry marketing order program.

EFFECTIVE DATE: August 9, 2002.

FOR FURTHER INFORMATION CONTACT: Anne M. Dec, Marketing Order Administration Branch, Fruit and Vegetable Programs, AMS, USDA, 1400 Independence Avenue, SW., STOP 0237, Washington, DC 20250–0237; telephone: (202) 720–2491, or Fax: (202) 720–8938. Small businesses may request information on compliance with this regulation by contacting Jay Guerber, Marketing Order Administration Branch, Fruit and Vegetable Programs, AMS, USDA, 1400 Independence Avenue, SW., STOP 0237, Washington, DC 20250–0237; telephone (202) 720–2491; Fax (202) 720–8938.

SUPPLEMENTARY INFORMATION: Prior documents in this proceeding: Notice of Hearing issued on March 17, 2000, and published in the March 23, 2000, issue of the **Federal Register** (65 FR 15580); Recommended Decision and Opportunity to File Written Exceptions issued on January 15, 2002, and published in the January 24, 2002, issue of the **Federal Register** (67 FR 3540); and Secretary's Decision and Referendum Order issued May 3, 2002, and published in the **Federal Register** on May 10, 2002 (67 FR 31896).

This administrative action is governed by the provisions of sections 556 and 557 of Title 5 of the United States Code and, therefore, is excluded from the requirements of Executive Order 12866.

Preliminary Statement

This final rule was formulated based on the record of a public hearing held in Rochester, New York on March 27 and 28, 2000; in Grand Rapids, Michigan on March 29, 30, and 31, 2000; in Kennewick, Washington on April 4 and 5, 2000; and in Salt Lake City, Utah on April 6, 2000. The hearing was held to consider the proposed amendment of Marketing Agreement and Order No. 930, regulating the handling of tart cherries grown in the States of Michigan, New York, Pennsylvania, Oregon, Utah, Washington, and Wisconsin, hereinafter referred to collectively as the ''order.'' The hearing was held pursuant to the provisions of the Agricultural Marketing Agreement Act of 1937, as amended (7 U.S.C. 601 *et seq.*), hereinafter referred to as the ''Act,'' and the applicable rules of practice and procedure governing the formulation of marketing agreements and marketing orders (7 CFR Part 900). The notice of hearing contained numerous proposals submitted by the Board, and one proposed by the Agricultural Marketing Service (AMS).

The Board's proposals included making all districts subject to volume regulations, rather than only those districts producing more than 15 million pounds per year; making shipments of cherry juice and juice concentrate to certain markets eligible to receive diversion credit; changing provisions related to alternate Board members serving for absent members at Board meetings; making all cherry shipments subject to assessments; and eliminating the requirement that different assessment rates be established for different cherry products. Other amendments proposed by the Board pertained to allocation of Board membership; clarification of order provisions relating to exemption and diversion; release of cherries in the inventory reserve; and the use of crop estimates other than the official USDA crop estimate in developing the Board's marketing policy.

The Fruit and Vegetable Programs of AMS proposed to allow such changes as may be necessary to the order, if any of the proposed amendments are adopted, so that all of the order's provisions conform with the effectuated amendments.

Upon the basis of evidence introduced at the hearing and the record thereof, the Administrator of AMS on January 15, 2002, filed with the Hearing Clerk, U.S. Department of Agriculture, a Recommended Decision and Opportunity to File Written Exceptions thereto by February 13, 2002. Ninety-six exceptions were filed during the period provided.

A Secretary's Decision and Referendum Order was issued on May 3, 2002, directing that a referendum be conducted during the period May 20 through May 31, 2002, among growers of tart cherries to determine whether they favored the proposed amendments to the order. In the referendum, all amendments were favored by more than two-thirds of the growers voting in the referendum by number and volume.

The amended marketing agreement was mailed to all tart cherry handlers in the production area for their approval. The marketing agreement was approved by handlers representing more than 50 percent of the volume of tart cherries handled by all handlers during the representative period of June 1, 2000, through May 31, 2001.

Small Business Considerations

Pursuant to the requirements set forth in the Regulatory Flexibility Act (RFA), AMS has considered the economic impact of this action on small entities. Accordingly, AMS has prepared this final regulatory flexibility analysis.

The purpose of the RFA is to fit regulatory actions to the scale of business subject to such actions so that small businesses will not be unduly or disproportionately burdened. Marketing orders and amendments thereto are unique in that they are normally brought about through group action of essentially small entities for their own benefit. Thus, both the RFA and the Act are compatible with respect to small entities.

Small agricultural producers have been defined by the Small Business Administration (SBA) (13 CFR 121.201) as those having annual receipts of less than $750,000. Small agricultural service firms, which include handlers regulated under the order, are defined as

those with annual receipts of less than $5,000,000.

Interested persons were invited to present evidence at the hearing on the probable regulatory and informational impact of the proposed amendments on small businesses. The record indicates that these amendments could result in additional regulatory requirements being imposed on some tart cherry handlers, while regulatory burdens on other handlers could be reduced. Overall benefits are expected to exceed costs.

The record indicates that there are about 40 handlers regulated under Marketing Order No. 930. In addition, there are about 905 producers of tart cherries in the production area.

The record indicates that of the 41 tart cherry handlers operating during the 1999–2000 season, 7 had processed tonnage of more than 10 million pounds (or 17 percent of all handlers); 8 had between 5.1 and 10 million pounds (20 percent); 12 had between 2.1 and 5 million pounds (29 percent); and the remaining 14 had less than 2 million pounds of processed tonnage (34 percent). Handlers accounting for 10 million pounds or more would be classified as large businesses. Thus, a majority of tart cherry handlers could be classified as small entities.

Twenty handlers are located in Michigan—nine in district 1 (Northern Michigan), eight in district 2 (Central Michigan) and three in district 3 (Southern Michigan). Of the remaining 21 handlers, 4 are in district 4 (New York), 3 are in district 5 (Oregon), 1 is in district 5 (Pennsylvania), 3 are in district 7 (Utah), 5 are in district 8 (Washington), and 5 are in district 9 (Wisconsin). Many handlers process cherries grown in more than one district.

Of the 904 growers who produced cherries in 1999, 368 were in Northern Michigan (41 percent), 149 were in Southern Michigan (16 percent), 129 percent in Central Michigan (14 percent), 84 in New York (9 percent), 65 in Wisconsin (7 percent), 38 in Utah (4 percent), 29 in Pennsylvania (3 percent), 27 in Oregon (3 percent), and 17 in Washington (2 percent).

During the 3-year period 1999–2001, production of tart cherries averaged 300.6 million pounds. By district, Northern Michigan accounted for 44.0 percent of the production, followed by Central Michigan with 22.4 percent, Southern Michigan with 8.7 percent, Utah and Washington each with 6.6 percent, New York with 5.3 percent, Wisconsin with 3.4 percent, Pennsylvania with 1.7 percent, and Oregon with 1.3 percent.

Dividing total production by the number of growers, the average grower produces about 332,500 pounds of cherries annually. With grower returns of about 20 cents per pound, average revenues would be $66,500. Thus, it is reasonable to conclude that most tart cherry growers are small entities.

At 20 cents per pound, a grower would have to produce 2.5 million pounds of cherries to reach the $500,000 receipt threshold to qualify as a large producing entity under the SBA's definition that was in effect at the time of the hearing. The evidence of record is that only 13 growers (or less than 2 percent of the total number of growers) produced 2.5 million pounds or more during the 1999–2000 crop year. Five of those growers (or 38 percent) were located in Northern Michigan (district 1) and three operated (23 percent) in Central Michigan (district 2). The remaining five growers in this category (38 percent) were distributed among the remaining seven districts. The distribution of large growers is thus in proportion to the overall distribution of growers among the districts.

A large majority (more than 98 percent) of the tart cherry growers falls into the previous SBA definition of a small entity (annual receipts of less than $500,000); it is reasonable to assume that an even greater majority qualify under the current SBA definition of a small grower (annual receipts of less than $750,000).

During the 3 years 1999 to 2001, the average grower accounted for about 333,000 pounds of cherries. By district, average grower size varies considerably. The average grower in Washington accounts for roughly 1,159,000 pounds of cherries. Next in size is Central Michigan with 530,000 pounds, followed by Utah (518,000 pounds), Northern Michigan (360,000 pounds), New York (191,000 pounds), Pennsylvania (179,000 pounds), Southern Michigan (177,000 pounds), Wisconsin (155,000 pounds) and Oregon (141,000 pounds).

This action amends the order: (1) To provide that all districts in the production area with annual production in excess of 6 million pounds be subject to volume regulation rather than only those with annual production in excess of 15 million pounds; (2) To allocate Board membership among districts based on levels of production and make a corresponding change in quorum requirements; (3) To authorize a Board member to designate any alternate to serve for that member at a Board meeting in the event the member and his or her alternate are unavailable; (4) To clarify the diversion and exemption provisions of the order by eliminating cross references among those provisions and adding general rulemaking authority to implement handler diversion provisions; (5) To add specific authority to the order to exempt or provide diversion credit for cherries exported to designated markets; (6) To provide diversion credit for shipments of cherry juice and juice concentrate to established diversion markets; (7) To add specific authority for the transfer of diversion credits among handlers; (8) To provide that grower diversions that take place in districts that are subsequently exempt from volume regulation qualify for diversion credit; (9) To allow cherries in the inventory reserve to be released for use in only certain designated markets; (10) To specify that the 10-percent reserve release for market expansion only applies during years when volume regulations are in effect; (11) To require assessments to be paid on all cherries handled, except for those that are diverted by destruction at a handler's facility and those covered by a grower diversion certificate; (12) To eliminate the requirement that differential assessment rates be established for various cherry products based on the relative market values of such products; and (13) To allow the Board to use an estimate other than the official USDA crop estimate in developing its marketing policy.

Industry Background

The principal demand for tart cherries is in the form of processed products. Tart cherries are dried, frozen, canned, juiced, and pureed. During the period 1995–96 through 1999–00, approximately 91 percent of the U.S. tart cherry crop, or 280.5 million pounds, was processed annually. Of the 280.5 million pounds of tart cherries processed, 62 percent was frozen, 29 percent was canned, and 9 percent was utilized for juice.

Based on National Agricultural Statistics Service data, acreage in the United States devoted to tart cherry production has been trending downward. In the ten-year period, 1987–88 through 1997–98, the tart cherry area decreased from 50,050 acres, to less than 40,000 acres. In 1999–00, approximately 90 percent of domestic tart cherry acreage was located in four States: Michigan, New York, Utah and Wisconsin. Michigan leads the nation in tart cherry acreage with 70 percent of the total. Michigan produces about 75 percent of the U.S. tart cherry crop each year. In 1999–00, tart cherry acreage in Michigan decreased to 28,100 acres from 28,400 acres the previous year.

In crop years 1987–88 through 1999–00, tart cherry production ranged from a high of 396.0 million pounds in 1995–96 to a low of 189.9 million pounds in 1991–92. The price per pound received by tart cherry growers ranged from a low of 7.3 cents in 1987 to a high of 46.4 cents in 1991. These problems of wide supply and price fluctuations in the tart cherry industry are national in scope and impact. Growers testified during the order promulgation process that the prices they received often did not come close to covering the costs of production. They also testified that production costs for most growers range between 20 and 22 cents per pound, which is well above average prices received during the 1993–1995 seasons.

The industry demonstrated a need for an order during the promulgation process of the marketing order because large variations in annual tart cherry supplies tend to lead to fluctuations in prices and disorderly marketing. As a result of these fluctuations in supply and price, growers realize less income. The industry chose a volume control marketing order to even out these wide variations in supply and improve returns to growers. During the promulgation process, proponents testified that small growers and processors would have the most to gain from implementation of a marketing order because many such growers and handlers had been going out of business due to low tart cherry prices. They also testified that, since an order would help increase grower returns, this should increase the buffer between business success and failure because small growers and handlers tend to be less capitalized than larger growers and handlers.

Aggregate demand for tart cherries and tart cherry products tends to be relatively stable from year-to-year. Similarly, prices at the retail level show minimal variation. Consumer prices in grocery stores, and particularly in food service markets, largely do not reflect fluctuations in cherry supplies. Retail demand is assumed to be highly inelastic which indicates that price reductions do not result in large increases in the quantity demanded. Most tart cherries are sold to food service outlets and to consumers as pie filling; frozen cherries are sold as an ingredient to manufacturers of pies and cherry desserts. Juice and dried cherries are expanding market outlets for tart cherries.

Demand for tart cherries at the farm level is derived from the demand for tart cherry products at retail. In general, the farm-level demand for a commodity consists of the demand at retail or food service outlets minus per-unit processing and distribution costs incurred in transforming the raw farm commodity into a product available to consumers. These costs comprise what is known as the ''marketing margin.''

The supply of tart cherries, by contrast, varies greatly. The magnitude of annual fluctuations in tart cherry supplies is one of the most pronounced for any agricultural commodity in the United States. In addition, since most tart cherries are either canned or frozen, they can be stored and carried over from year-to-year. This creates substantial coordination and marketing problems. The supply and demand for tart cherries are rarely in equilibrium. As a result, grower prices fluctuate widely, reflecting the large swings in annual supplies.

In an effort to stabilize prices, the tart cherry industry uses the volume control mechanisms under the authority of the Federal marketing order. This authority allows the industry to set free and restricted percentages.

The primary purpose of setting restricted percentages is an attempt to bring supply and demand into balance. If the primary market is oversupplied with cherries, grower prices decline substantially.

The tart cherry sector uses an industry-wide storage program as a supplemental coordinating mechanism under the Federal marketing order. The primary purpose of the storage program is to warehouse supplies in large crop years in order to supplement supplies in short crop years. The storage approach is feasible because the increase in price—when moving from a large crop to a short crop year—more than offsets the cost for storage, interest, and handling of the stored cherries.

The price that growers receive for their crop is largely determined by the total production volume and carry-in inventories. The Federal marketing order permits the industry to exercise supply control provisions, which allow for the establishment of free and restricted percentages for the primary market, and a storage program. The establishment of restricted percentages impacts the production to be marketed in the primary market, while the storage program has an impact on the volume of unsold inventories.

The volume control mechanism used by the cherry industry results in decreased shipments to primary markets. Without volume control the primary markets (domestic) would likely be oversupplied, resulting in low grower prices.

Recent grower prices have been as high as $0.20 per pound. At current production levels, the cost of production is reported to be $0.20 to $0.22 per pound. Thus, the estimated $0.20 per pound received by growers is close to the cost of production. The use of volume controls is believed to have little or no effect on consumer prices and will not result in fewer retail sales or sales to food service outlets.

Without the use of volume controls, the industry could be expected to continue to build large amounts of unwanted inventories. These inventories have a depressing effect on grower prices. The use of volume controls allows the industry to supply the primary markets while avoiding the disastrous results of oversupplying these markets. In addition, through volume control, the industry has an additional supply of cherries that can be used to develop secondary markets such as exports and the development of new products.

The free and restricted percentages established under the order release the optimum supply and apply uniformly to all regulated handlers in the industry, regardless of size. There are no known additional costs incurred by small handlers that are not incurred by large handlers. The stabilizing effects of the percentages impact all handlers positively by helping them maintain and expand markets, despite seasonal supply fluctuations. Likewise, price stability positively impacts all producers by allowing them to better anticipate the revenues their tart cherries will generate.

While the benefits resulting from operation of the marketing order program are difficult to quantify, the stabilizing effects of volume regulations impact both small and large handlers positively by helping them maintain markets even though tart cherry supplies fluctuate widely from season to season.

Districts Subject to Volume Regulation

The order currently covers cherries grown in Michigan, New York, Pennsylvania, Oregon, Utah, Washington and Wisconsin. For purposes of regulation and allocation of Board membership, the seven-State production area is divided into nine districts. Michigan, the largest producing State, is divided into three districts—Northern Michigan, Central Michigan, and Southern Michigan. Each of the other States constitutes a single district.

A principal feature of the tart cherry marketing order is supply management through the use of volume regulations. Volume regulations are implemented through the establishment of free and

restricted percentages that are recommended by the Board and implemented by the Department through the public rulemaking process. These percentages are then applied to each regulated handler's acquisitions in a given season. ''Free market tonnage percentage'' cherries may be marketed in any outlet. ''Restricted percentage'' cherries must be withheld from the primary market. This can be accomplished by either placing the cherries into handlers' inventory reserves or by diverting them. Cherries may be diverted by leaving them unharvested in the orchard or by destruction at the processing plant; or by using them in secondary markets. These secondary markets include exports (except to Canada or Mexico), new products, new market development, experimental purposes, and charitable contributions. Shipments of restricted percentage cherries to these specified markets receive diversion credits which handlers use to fulfill their restricted obligation.

Section 930.52 of the order provides that volume regulations only apply to cherries grown in districts in which average annual production of cherries over the prior 3 years has exceeded 15 million pounds. Additionally, paragraph (d) of § 930.52 provides that any district producing a crop which is less than 50 percent of the average annual processed production in that district in the previous 5 years would be exempt from any volume regulation in the year of the short crop.

The Board proposed eliminating the 15-million pound threshold, and subjecting all 9 districts to volume regulation. No proposal was made to change the provision of § 930.52(d).

Most witnesses at the hearing addressed this issue. Growers and processors in Michigan, Utah and Wisconsin testified in support of the Board's proposal. Opposition was primarily from growers and handlers in Pennsylvania and Oregon. Some growers and processors in New York and Washington testified in support of the Board's proposal, while others were opposed to a change in the 15-million pound threshold.

The record shows that production levels in the nine districts vary considerably, with Northern Michigan consistently producing the largest volume of tart cherries, and Oregon the least. The following table shows tart cherry production by district for the 5 years 1997 through 2001 (all figures are in million pound units). The data for the first 3 years (1997 through 1999) were introduced on the hearing record. The statistics for 2000 and 2001 became available subsequent to the hearing and may be found in reports compiled by the Board and retained by the Department.

District	1997	1998	1999	2000	2001
No. Michigan	140.7	187.8	107.7	107.5	182.0
Central Mich.	68.7	58.2	47.2	70.8	84.0
So. Michigan	14.4	17.4	28.6	20.3	30.1
New York	13.3	13.1	16.9	16.5	14.6
Oregon	2.4	2.2	5.1	4.0	2.2
Pennsylvania	5.6	4.0	6.9	5.3	3.5
Utah	17.5	32.5	14.5	32.5	12.0
Washington	11.8	13.7	16.6	17.4	25.2
Wisconsin	11.2	14.7	7.9	9.7	12.7
Total	285.4	343.6	251.4	284.0	366.3

Using the above figures, the following 3-year averages (used to determine which districts are subject to volume regulation) were computed.

District	Average		
	1997–99	1998–00	1999–01
No. Michigan	145.4	134.3	132.4
Central Mich.	58.0	58.7	67.3
So. Michigan	20.1	22.1	26.3
New York	14.4	15.5	16.0
Oregon	3.2	3.8	3.8
Pennsylvania	5.5	5.4	5.2
Utah	21.4	26.5	19.7
Washington	14.0	15.9	19.7
Wisconsin	11.3	10.8	10.1
Total	293.5	293.0	300.6

The above table shows that for each of the 3-year periods, the three Michigan districts and Utah consistently exceeded the 15-million pound threshold. Production in Oregon, Pennsylvania and Wisconsin was below the threshold in all periods, while New York and Washington each exceeded the 15-million pound threshold in two out of three of the periods.

The order became effective in 1996, based on a series of hearings that began in December 1993 and ended in January 1995. Proponents of the order supported the 15-million pound threshold as a criterion for determining which districts would be subject to volume regulation. At the time the order was implemented, the three Michigan districts, New York and Utah had average annual production in excess of 15 million pounds. These five districts accounted for 92 percent of U.S. production in 1995, and 89 percent of U.S. production in 1996.

Proponents of the order also supported a provision that a district not meeting the 15-million pound threshold would become covered by regulation when it reached a production level equal to 150 percent of its average annual production during the period

1989 through 1992. The purpose of this provision was to catch surges in production that occasionally occur in order to more equitably distribute the burden of supply control. It was also to make sure that when smaller producing districts expand production capacity, they do not take advantage of the system and become free riders. This was intended to prevent a district from benefitting from the program without contributing to the effort to reduce surplus supplies.

After considering the record evidence in support of this provision, the Department decided not to include it in the order. The provision, as proposed, seemed to be overly complicated to administer and would possibly be inequitable to tart cherry growers and handlers. In addition, proponents indicated that it was not their intent to regulate States with small production volumes since their aggregate volume is not a critical amount when compared to the total volume of tart cherries produced.

Several witnesses at the amendatory hearing suggested that, had the 150 percent rule been incorporated into the initial order, the amendment to eliminate the 15-million pound threshold would now be unnecessary.

The following table shows production in the initially unregulated districts during the period 1989 through 1992.

	1989	*1990*	*1991*	*1992*	*Average*	*150%*
Pennsylvania	6.0	3.5	11.5	6.0	6.7	10.0
Wisconsin	7.6	4.8	7.8	9.1	7.3	10.9
Oregon	15.0	7.5	7.5	9.5	9.9	14.8
Washington	6.4	7.4	9.8	12.8	9.1	13.6

The record shows that neither Pennsylvania nor Oregon has reached a level of production equal to 150 percent of their production during this base period. Wisconsin first exceeded production of 10.9 million pounds (150 percent of its average annual production in the base period) in 1997, and Washington exceeded production of 13.6 million pounds (150 percent of its production during the base period) in 1998.

If the order were implemented as proposed by the proponents during the promulgation, all districts but Pennsylvania and Oregon would currently be regulated. As it is, for the 2001 season, Wisconsin is also unregulated. In the 1999 crop year, Pennsylvania and Oregon together accounted for 4.9 percent of the U.S. tart cherry crop. In 2000, they accounted for 3.3 percent of the total, and in 2001, only 1.6 percent. Adding production in Wisconsin during those years brings the percentages in the 3 years 1999 to 2001 to 8 percent, 7 percent and 5 percent respectively.

With respect to New York, witnesses concurred that with the 15-million pound threshold, that district would likely be subject to regulation only about 50 percent of the time in the future. That is because production in that State is close to the threshold, ranging from 13.1 to 16.9 million pounds over the last 5 seasons. Concern was also expressed that Utah could fall below the established threshold in upcoming years and become unregulated. Washington was expected to continue to increase its production and become subject to regulation in the near future. (Washington did exceed the threshold during the period 1998–2000, and was subject to the volume regulation implemented for the 2001 crop). Witnesses agreed that production in Oregon, Pennsylvania and Wisconsin was likely to remain below 15 million pounds.

The conclusion by proponents of the Board's proposal was that with the order as currently written, a greater proportion of U.S. production could become unregulated. This would dilute the effectiveness of the program and, more important, increase the amount of regulation imposed on the remaining regulated districts.

Since the order became operational, volume regulations have been implemented for four crop years—1997, 1998, 2000, and 2001. No regulation was deemed necessary for the 1999 crop. The following table shows the level of regulation implemented in 1997, 1998, 2000 and 2001. With the exception of the restricted percentages, all figures are in million pound units.

	1997	1998	2000	2001
U.S. Crop	285.0	344.0	284.0	366.3
Carry-in	70.0	38.8	87.0	39.0
Total Available Supply	355.0	382.8	371.0	405.3
3-Year Average Sales	269.9	288.6	277.0	217.0
Target Carry-out	0.0	0.0	0.0	0.0
Economic Adjustment	(23.0)	(31.4)	(22.0)	50.0
Optimum Supply	246.9	257.2	257.0	267.0
Surplus	108.1	125.6	116.0	138.3
Production in Regulated	.....	.....	.....	.....
Districts	240.0	309.0	232.0	335.9
Restricted Percentage	45	41	50	41

If all districts had been subject to regulation, the surplus would have been divided by total production rather than by production in the regulated districts. Had this been done, the restricted percentage in 1997 would have been 38 percent rather than 45 percent; the restricted percentage in 1998 would have been 37 percent rather than 41 percent; the restricted percentage in 2000 would have been 41 percent rather than 50 percent; and the restricted percentage in 2001 would have been 39 percent instead of 41 percent. The difference is relatively small for the 2001 crop year because production in Utah (12 million pounds) was less than 50 percent of its prior 5-year average, so that district was unregulated in the 2001 crop year.

One of the primary arguments made by supporters of the Board's proposed amendment was that of fairness. These witnesses stated that all tart cherry

growers benefit from the operation of the order, but the burden of regulation is borne only by those in the regulated districts. They testified that revenues received by growers of similar size varied considerably due solely to where a particular grower's farm was located. They concluded that no growers in the regulated districts receive gross returns equal to those received in non-regulated districts.

To illustrate, an agricultural economist from Michigan State University (who was a witness testifying in support of the Board's amendment) presented an analysis of the economic impacts of the program on growers in regulated versus non-regulated districts. This analysis compared gross farm income for growers of the same size in regulated and non-regulated districts. It assumed a grower who produces 200 tons on 40 acres, or 10,000 pounds per acre. Estimates of likely returns for the 1998 crop were used.

For purposes of this analysis, it was assumed that the grower in the non-regulated district could sell all of his or her production in primary market outlets. In the case of the grower in the regulated district, it was assumed that his or her crop utilization would be allocated in accordance with the overall industry averages in 1998. For example, about 3 percent of the tonnage would be placed in the inventory reserve, 11 percent would be exported, and 13 percent would be diverted through non-harvest.

Prices for free market cherries were USDA estimates of 14 cents per pound for the regulated districts and 13.5 cents per pound for the non-regulated districts.

Returns for market growth factor cherries were expected to be somewhat lower (12 cents per pound) because these cherries tend to be sold later in the year, or perhaps in a subsequent year. A conservative figure of 6 cents per pound was used for reserve cherries because of the many uncertainties as to what those cherries might return (for example, the timing of their release and prevailing prices that might exist). Export sales were estimated by industry leaders to average about 9 cents per pound in 1998. For new product development, an estimate of 11 cents per pound was used, taking into account the considerable variation of returns for new cherry products depending upon the processor and the circumstances surrounding the new products. For non-harvested cherries, a savings of 3 cents per pound in variable costs (e.g., harvesting and trucking) was used. Finally, no return was recorded for cherries diverted through at-plant diversions.

The income for a grower in a regulated district, based on the analysis of the witness, is shown below:

	Lbs.	Percent	Price	Income
Open Market	240,000	60	$0.14	$33,600
Market Growth	36,000	9	0.12	4,320
Inventory Reserve	12,000	3	0.06	720
Exports	44,000	11	0.09	3,960
New Products	8,000	2	0.11	880
Non-Harvest	52,000	13	0.03	1,560
At-Plant Diversion	8,000	2	0.00	0
Total Production	400,000	100	.....	45,040

For a grower in a non-regulated district, income was estimated as follows:

	Lbs.	Percent	Price	Income
Open Market	400,000	100	$0.135	$54,000

In summary, the grower in the non-regulated district would receive revenues of $54,000, about 20 percent more than the grower in the regulated district. Both growers would benefit from any strengthening of prices through the use of volume regulations.

Opposition to the Board's proposal was expressed primarily by industry members in unregulated districts. One of the arguments made was that growers in these districts would be much more severely impacted by a volume regulation because yields in those districts are so low compared to those in regulated districts.

One witness used the analysis given above, but used different yields per acre. For the grower in a regulated district, he used 40 acres with a yield of 7,400 pounds per acre. This resulted in total production for that grower of 296,000 pounds and revenues of about $33,330. For the grower in a non-regulated district, he again used 40 acres, but used a yield of 2,400 pounds per acre. This provided total production of 96,000 pounds and revenues of only $2,960. Had the second grower been subject to volume regulation, his or her revenues would have been even lower.

The following table shows yields per acre in the States covered by the order for the years 1997 through 2000. The annual yields are from USDA statistics, while the average yield for Washington for the 4-year period was obtained from a processor survey in that State. All figures are in pounds per acre.

State	1997	1998	1999	2000	Average
Utah	6,250	11,790	5,360	11,800	8,800
Michigan	7,920	9,260	6,580	7,020	7,695
New York	5,580	5,380	6,850	7,550	6,340
Pennsylvania	5,420	3,500	6,000	5,080	5,000
Wisconsin	4,670	6,580	4,350	4,350	4,988
Oregon	2,850	2,150	4,080	3,380	3,115
Washington	NA	NA	NA	NA	14,000

The above table shows that average yields do vary among the cherry producing States. It also shows that yields within the States vary considerably from year to year.

A witness supporting the Board's proposal stated that the use of average yields for an entire State is misleading. Michigan, for example, has a 4-year average yield of about 7,600 pounds per acre. The average yields for the three districts that comprise Michigan are quite different. In Northern Michigan, yields averaged about 13,000 pounds per acre, while in Central Michigan they averaged 5,000 pounds per acre and in Southern Michigan only 4,000 pounds per acre.

This witness further went on to state that variations in yields within a geographic district exceed the variations among the districts. He gave a personal example. The witness is a processor in Central Michigan. His organization deals with about 20 growers. Yields for those growers in 1998 ranged from 1,000 to 15,000 pounds per acre.

Therefore, it is reasonable to assume that the State in which a grower farms is not necessarily a good indicator of an individual grower's potential yield per acre. While weather conditions affect yields (e.g., susceptibility to freezes), weather conditions can vary as much within a district as between districts. Also, there are many other variables that contribute to a grower's yield per acre. These include the density of trees planted per acre, the age of the trees, and cultural practices undertaken by individual growers to care for their orchards. However, the table showing yields per acre does indicate that there is a definite difference in yields among the various States.

Regarding the age of trees, the record indicates that tart cherry trees start losing optimum productivity at about 20 years. Growers testified that they typically replant their trees when they are between 20 and 25 years old. The following table shows the percentage of acreage in each State that contained older trees in 1998.

State	Percent acreage 21–25 years	Percent acreage 26+years	Total percent 21+ years
Michigan	15	6	21
Utah	8	1	9
New York	24	7	31
Wisconsin	20	15	35
Washington	18	5	23
Pennsylvania	30	6	36
Oregon	30	48	78

Oregon, consistently the lowest yielding producing district, has substantially more older trees planted than other States. Because older trees tend to produce less fruit, and Oregon has a high percentage of older trees, this is likely to explain in part why Oregon's yields are, on average, lower than in other areas. Pennsylvania had the second largest percentage of older trees.

Another argument against eliminating the 15 million-pound threshold was that unregulated districts like Oregon and Pennsylvania had already ''done their part'' to reduce the surplus of tart cherries by reducing their acreage. Any continued surpluses were attributable to the major producing State, Michigan. It was therefore argued that State should bear the consequences of its actions and not impose its problems on the smaller districts.

The record shows that U.S. tart cherry bearing acreage had declined from a high of 50,050 acres in 1987, to 39,880 acres in 2000. All producing States recorded acreage reductions during this period. On a percentage basis, the greatest reduction was in New York (down 52 percent), followed by Oregon (down 36 percent), Utah (down 30 percent), Pennsylvania (down 25 percent), Washington (down 24 percent), and Wisconsin (down 17 percent). Michigan had the lowest percentage decrease (down 15 percent), but the largest decline in total number of acres (a reduction of 5,140 acres).

The record evidence is that acreage in all districts have declined over the past decade. Decisions to reduce acreage were made by individual growers based on their assessments of the best use of their land. While opportunities for alternative land uses vary somewhat by State, they also vary within the States.

In determining whether a surplus of tart cherries exists, total U.S. supplies are compared to total demand in the primary market. Production in each district contributes to the total supply, and thus to any surplus that may exist. However, Michigan accounts for such a large proportion of the total, that production in that State alone can warrant a volume regulation. Additionally, the evidence is that production in the smallest producing State—Oregon—is negatively correlated to production in Michigan. That is, when production in Michigan is high, production in Oregon is generally low. Thus, it is likely that with elimination of the production threshold, Oregon would be regulated in years when its production is below normal. This could result in a heavier burden being placed on growers in Oregon as a result of volume regulation than is true in the other producing districts.

Additionally, the record shows that the benefits of the supply management provisions of the order accrue to the entire U.S. tart cherry industry. The short-run benefits arise when surplus supplies are reduced, and market prices (due to the inelastic demand for tart cherries) rise to levels that are closer to growers' typical costs of production. Longer range gains are also expected from the encouragement to expand market demand through new market and new product development.

The aggregate short-run benefits to the industry's growers from the use of volume regulation in 1997 and 1998 have been estimated to be at least $20 million per year. This has resulted because the smaller market surpluses have resulted in stronger grower prices which are estimated to be 7 to 9 cents per pound greater during those years.

The record shows that tart cherries, regardless of where grown in the U.S., are sold into markets that are essentially national markets with similar, closely interrelated prices throughout the country. Therefore, the somewhat higher prices that have resulted from the order's supply management features have accrued to all tart cherry growers in the United States.

However, the history of the order and the evidence on the record support the premise that the smallest producing districts should not be subject to volume regulation under the tart cherry marketing order. Further, there is an argument to be made for reducing the current 15-million pound threshold.

After considering all the testimony and other record evidence, the Department has concluded that a threshold of 6 million pounds would be more reasonable. This would result in all districts that have increased production over the past decade being subject to regulation, consistent with the original intent of the proponents of the order.

The record shows that the two districts that would not be regulated under a 6-million pound threshold—Oregon and Pennsylvania—produce insignificant volumes of tart cherries compared with total U.S. production. Production in these districts has not grown, nor is it anticipated that it will in the future. The evidence supports claims that these smaller producing districts would be more impacted by a volume regulation than other districts. Costs may be higher to growers in those areas than in others because they tend to have lower yields. Also, processing capacity in those districts tends to be limited, supporting the argument that production is unlikely to increase. In addition, processors in the smaller producing districts testified that they would have to shut down their facilities if those districts were subject to volume regulation because they would not be able to get sufficient supplies of cherries to run their operations efficiently. If the smaller producing districts do increase their production, they would become regulated once they reach the 6-million pound threshold.

The proponent evidence showed that while volume regulations have helped strengthen overall cherry prices, there are costs involved with complying with these regulations. Such costs include reduced returns for cherries that cannot be sold in primary markets. Imposing those costs on the smallest producing districts would not result in any higher overall price for tart cherries. Additionally, regulating the two smallest States would not reduce the volume of regulation imposed on cherries grown in the other States because of their low levels of production. In the four years that restricted percentages have been recommended by the Board, the percentage would not have changed at all in two of four years (by not including Pennsylvania and Oregon) and would have been marginally reduced in the other two years. Thus, it appears that the costs of regulating these minor districts would not be outweighed by any accrued benefits.

Allocation of Board Membership

Section 930.20 of the order provides for a Cherry Industry Administrative Board, appointed by the Secretary to locally administer the program. Among the Board's responsibilities is recommending regulations to implement marketing order authorities. The Board consists of 19 members: 18 tart cherry growers and handlers, and 1 public member.

For purposes of Board representation (among other things), the production area is divided into nine districts. Each district is allocated one to four Board members. Six of the nine current districts, including all districts subject to volume regulation, are allocated more than one member. Those five districts are Northern Michigan (four members), Central Michigan (three members), Southern Michigan (two members), New York (two members), Utah (two members), and Washington (two members). The three districts with one member each are Oregon, Pennsylvania, and Wisconsin. The nineteenth Board member is selected to represent the general public, and need not be from any specific area.

Section 930.20 further provides that if a district with a single member becomes subject to volume regulation, that district will get a second Board member position. There is no specific requirement that a district must lose a seat if it falls below the 15 million pound threshold and is no longer subject to regulation.

The Board proposed amending § 930.20 to provide that membership for each district be based on the average annual production for that district over the previous 3 years. Districts with up to and including 10 million pounds would be represented by one Board member; districts with more than 10 and up to and including 40 million pounds would have two members; districts with more than 40 and up to and including 80 million pounds would have three members; and districts with more than 80 million pounds would have four members.

The record shows that this amendment could result in a larger number of Board members. Using average annual production figures for the years 1999 through 2001, one district (Wisconsin) would have been entitled to an additional Board member position for the term of office that began July 1, 2000. Thus, the total number of Board members under this proposed amendment would have increased to 20 members (versus 19 members under the provisions currently in effect).

An increase in the number of Board members would result in a marginal increase in Board expenses. This is because the Board reimburses members for costs incurred in attending Board meetings (travel costs, etc.). Since Board expenses are funded through handler assessments, all handlers would be impacted by slightly higher assessments.

However, these slight cost increases will be offset by better industry representation on the Board. Reallocating membership on an annual basis will allow membership to more closely reflect changing production trends in the industry. This should lead to better decision making by a more representative administrative body.

Designation of a Temporary Alternate to Act for an Absent Board Member

As previously discussed, the Board is composed of 19 members, with the industry members allocated among nine districts. Each Board member has an alternate who has the same qualifications as the member. Industry Board members and alternates are nominated by their peers in the district they represent.

Section 930.28 of the order provides that if a Board member is absent from a meeting, his or her alternate will act in that member's place. There is no provision for a situation in which both the member and that member's alternate are unavailable.

The Board proposed changing § 930.28 as follows. If both a member and his or her alternate cannot attend a Board meeting, the member or the alternate (in that order) could designate another alternate member to act in their stead. If neither the member nor the alternate chooses to make such a designation, the Board's chairperson would be free to do so (with the concurrence of a majority of present members).

The record supports the concept of allowing more flexibility for alternates to fill in for absent Board members. However, the Department revised the Board's proposal. A Board member can designate an additional alternate to act in his or her place when that member and that member's alternate are unable to attend a Board meeting. However, if the member chooses not to name an additional alternate, that decision does not then revert to the Board or its chairperson.

This amendment will allow more flexibility for Board members who cannot attend a Board meeting. It should also encourage a full contingency of voting members at Board meetings, while maintaining adequate representation among the districts comprising the production area. No additional costs should be incurred as a result of this change.

Clarification of Diversion and Exemption Provisions

As previously discussed, a primary feature of the tart cherry marketing order is supply management through the establishment of free and restricted percentages. These percentages are applied to each regulated handler's acquisitions of cherries. Free percentage cherries may be sold in any market, while restricted percentage cherries must be diverted by a grower or handler or placed in the inventory reserve.

Section 930.58 of the order provides for grower diversions. Under this section, growers may receive diversion certificates for cherries used for animal feed and cherries left unharvested in the orchard. Growers may also receive diversion certificates for ''uses exempt under § 930.62.'' A grower's diversion certificates can then be transferred to that grower's handler and used to meet the handler's restricted obligation.

Section 930.59 provides for handler diversions. Handlers may receive diversion credits for cherries used in such forms as the Board may designate, with approval of USDA. These forms may include destruction at the handler's facility; use in Board approved food banks or other approved charitable organizations; acquisition of grower diversion certificates; and uses exempt under § 930.62. Handlers desiring to use the first three forms must notify the Board prior to diverting cherries. Use of the fourth form requires application to and approval by the Board prior to diversion.

Section 930.62 provides that certain cherries may be exempt from volume regulation upon Board recommendation and USDA approval. Such cherries would also be exempt from assessment obligations and any established quality standards. Section 930.62 currently provides that exemptions may be provided for cherries diverted in accordance with § 930.59 (Handler diversion privilege); used for new product and new market development; or used for experimental purposes or for any other use designated by the Board, including cherries processed into products for markets for which less than 5 percent of the preceding 5-year average production of cherries was utilized.

The record indicates that the industry supports continuation of both the authority to exempt certain cherries from regulation, and the authority to provide diversion credits for cherries used for certain purposes. The application of each provision is different, however. An example provided at the hearing illustrates the difference. Assume a restricted percentage of 20 percent has been established, a regulated handler acquires 10 million pounds of cherries, and that handler uses 2 million pounds of those cherries for new market development. This handler would have a restricted obligation of 2 million pounds of cherries (20 percent of the 10 million pounds of cherries acquired).

If cherries used for new market development were eligible for diversion credit, this handler would have met his or her restricted obligation by using 2 million pounds for that purpose. The handler could thus market the remaining 8 million pounds of his or her cherries as free percentage cherries in any outlet he or she chose. If, however, cherries used for new market development were exempt from regulation, the restricted percentage would be applied to that handler's total acquisitions (10 million pounds), less the volume of cherries exempt from regulation (2 million pounds). Thus, this handler would have a restricted obligation of 1.6 million pounds (20 percent of 8 million pounds), which would have to be diverted in forms approved by the Board as eligible for diversion credit.

Cross references between §§ 930.59 and 930.62 have proved to be confusing. Thus, these sections are amended by deleting those cross references. Also, uses listed under § 930.62 as possible exempt uses are being listed under § 930.59 as possible uses eligible for handler diversion credit. Rulemaking will be required to designate whether a particular use would be exempt from regulation or would constitute an approved diversion outlet. Such rulemaking would be based on Board recommendations, following its assessment of the impact exemptions or diversions would have on the tart cherry industry.

This amendment is a clarification of the current order and its operation. It does not introduce new or different concepts. To the extent that it makes the order easier for growers and handlers to understand, it should be of benefit to the industry.

Exemption or Diversion Credit for Export Shipments

As discussed in the previous material issue, §§ 930.59 and 930.62 provide for handler diversions and exemptions, respectively. Certain uses of cherries are listed as eligible for diversion credit or exemptions. Under the authority in these sections (specifically, that for market development), diversion credits have been made available to handlers during recent crop years for shipments to export markets, excluding Canada and Mexico. Canada and Mexico were not included because of their proximity to the United States and concern about compliance matters.

The record indicates that allowing export shipments to receive diversion credits resulted in stronger export sales. Exports in 1997–98 were unusually high (around 50 million pounds), although they declined during the next season to 34 million pounds. Witnesses stated that the tart cherry industry needs to expand demand for its product through, among other things, development of new markets.

The Board proposed adding specific authority to §§ 930.59 and 930.62 to allow diversion credits or exemptions for such export markets as recommended by the Board and approved by the Secretary. This is a clarifying change only. It imposes no new or different regulatory requirements on the tart cherry industry.

Diversion Credit for Juice and Juice Concentrate

Section 930.59 of the order relates to how handlers may receive diversion credits to offset their restricted obligations. Paragraph (b) of that section states that diversion may not be accomplished by converting cherries into juice or juice concentrate.

The Board recommended that the order be amended by deleting the prohibition in § 930.59 (b) that shipments of cherry juice and juice concentrate to approved diversion outlets be eligible for diversion credit.

The record indicates that in the promulgation proceeding, handlers from Oregon and Washington were concerned that juice concentrate could be established as a use eligible for diversion credit. Those handlers indicated that they processed all or a majority of their cherries into juice concentrate. Cherries produced in that area of the country have a high brix (sugar content) level desirable for juice concentrate. Concern was expressed that if the Board decided to allow diversion credit for juice concentrate, an increase in the volume of juice in the marketplace and an accompanying reduction in juice prices could result. This would unduly harm the industry in the Washington and Oregon. USDA therefore inserted the provision to prohibit the use of juice or juice concentrate for diversion credit.

However, the use of juice and juice concentrate for export was allowed under the exemption provisions of the order for the 1997–98 season. The 1997–98 season was the first season of operation for the cherry order, and its

provisions were new to the industry and complex to administer. Handlers unfamiliar with order's diversion provisions had exported or contracted to export tart cherry juice or juice concentrate to eligible countries with the intention of applying for and receiving diversion certificates for those exports. If those handlers had been prohibited from receiving diversion certificates for those sales, the handlers would have incurred severe financial difficulties. Thus, the prohibition against exports of juice and juice concentrate was suspended for the 1997–98 season only.

The record shows that until 1997, the juice market was distressed. One reason was that there had been large volumes of concentrate produced in the preceding years in the Western United States—volumes that exceeded market demand. In 1995 particularly, there was a very large crop of tart cherries (a record 395.6 million pounds), and a large portion of that crop was processed into concentrate. An oversupply situation occurred, which led to low prices and a large carry-over of concentrate.

Witnesses claimed that the operation of the order has helped address the cherry oversupply situation, including the surplus of juice. Allowing exports of juice to receive diversion credits in 1997–98 was quite successful. The industry exported more than 4 million pounds (raw product equivalent) of juice concentrate that year, comprising about 10 percent of total exports qualifying for credit. At 9 cents per pound for the raw fruit, growers received about $382,500 in revenue from these sales. Handlers, whose value-added component is about $5.00 per gallon (or $.056 per pound), received $236,000 in revenue. In total, the industry gained at least $618,000 from export sales of juice concentrate in 1997–98.

Providing diversion credits for exports of juice concentrate by handlers in the regulated districts encouraged more exports of this product. The higher levels of exports of concentrate helped reduce heavy inventories and reduced the supplies available in the domestic market. This led to an increase in the domestic price for juice concentrate of about $4.00–$6.00 per gallon. Producers whose cherries were processed into concentrate benefitted from the strengthening of domestic juice prices.

In 1998, diversion credits were no longer authorized for exports of juice and juice concentrate. Witnesses stated that this hurt the U.S. cherry industry. Demand for juice concentrate in Europe was strong, but domestic processors could not export juice concentrate in a way that was economically feasible. Some processors exported raw juice stock to Europe so the raw stock could be juiced overseas. This meant that the added value of converting the stock to juice concentrate was lost to U.S. processors. It also meant higher freight costs for the raw product (versus concentrate). When juice stock was exported, the freight cost to Europe was about 10 cents per pound. Growers received little for cherries exported as raw juice stock, while grower returns for exported juice concentrate were positive.

Further, this restriction resulted in shorting the export juice market. Witnesses stated that if you are unable to supply a market consistently, that market looks for a more reliable source of supplies. When a market is lost to the U.S. industry for this reason, it is difficult to regain. This is particularly detrimental to the tart cherry industry as it seeks to expand markets for its heavy supplies of product.

As previously indicated, the prohibition on diversion credits for juice and juice concentrate was in response to concerns expressed by the industry in the Northwest. At the time the order was promulgated, it was represented that more than 85 percent of the crop in Washington was processed into juice. During recent years, less than half of the Washington crop was used for juice. Most of the rest of the crop was used for 5 + 1 cherries (25 pounds of cherries to 5 pounds of sugar). Additionally, the record shows that in 1993 there were 7 pitters in the State; by 2000, that number had grown to 20. This supports the conclusion that processors in Washington are able to pack a wider variety of finished products. Cherries grown in Washington have increasingly been processed into products other than juice and juice concentrate.

Also, production in the State of Washington has grown, and a number of witnesses at the hearing held in early 2000 expressed their belief that Washington would soon produce in excess of 15 million pounds annually and thus would become subject to volume regulation. In fact, production in Washington for the 3 years 1998 to 2000 averaged 15.9 million pounds, and Washington became subject to volume regulation in 2001. It was critical for handlers in Washington to be able to receive diversion credits for exports of juice and juice concentrate. This was particularly true because 5+1 cherries do not generally sell in export markets because they contain sugar and are thus subject to increased tariffs when exported. For these reasons, the Board unanimously recommended suspension of the prohibition on receiving diversion credit for exports of cherry juice and juice concentrate. This suspension became effective August 1, 2001 [66 FR 39409, July 31, 2001].

An additional benefit of allowing diversion credits for exported juice and juice concentrate is that it would ensure that the domestic market is adequately supplied in short crop years. In years when the crop is small, most available tart cherries will be used to supply higher value finished products rather than juice concentrate. If the industry does not have a supply of concentrate in reserve, the juice markets, both domestic and foreign, could go unsatisfied. In order to have supplies available in short crop years, there needs to be an incentive to have tart cherries stored as juice concentrate. Making juice and juice concentrate eligible for diversion credit would create an incentive to produce and store concentrate, which would ensure that markets for those products are adequately supplied. It could also result in fewer cherries being diverted in the orchard. This would benefit growers through enhanced revenues, because they receive more for cherries that are processed and sold than for cherries that are diverted in the orchard.

This amendment would result in additional options for handlers in meeting their restricted obligations under the order. It should also encourage expansion of markets for U.S. tart cherry products, which would benefit the industry as a whole. It will not adversely impact the sale of juice and juice concentrate in primary markets; in fact, it could tend to strengthen prices in those markets. This is because more juice will likely be exported, which would reduce the supply available in the domestic market.

Handler Transfers of Diversion Credits

Section 930.59 of the order provides for handler diversion credits. Those diversion credits are used by handlers to meet their restricted obligations. That provision of the order is silent with respect to the ability of handlers to transfer diversion credits among themselves to meet their restricted obligations.

The Board proposed adding a new paragraph (e) to § 930.59 to provide that a handler who acquires diversion certificates representing diverted cherries during any crop year may transfer such certificates to another handler or handlers.

The record shows that allowing transfers of diversion certificates

provides additional flexibility to tart cherry growers and handlers in meeting program requirements, without changing the amount of tart cherries available to be marketed as free percentage cherries. This can also result in the processing of the highest quality cherries available in any crop year, which would benefit the industry as a whole.

One witness at the hearing explained as an example that Handler A may acquire a very high quality of tart cherries in a given year, and would want to process and sell a higher percentage of those cherries than his or her free percentage would allow. Handler B may be in a situation where he or she receives more diversion credits than needed because most of that handler's pack is for export. (We are assuming that export sales are eligible for diversion credits.) Handler B might want to transfer those excess credits to Handler A.

Additionally, there may be a situation in which Handler C's growers have low quality cherries due to adverse growing conditions. These growers may choose to use in-orchard diversions to a greater extent than they normally would. Handler C could wind up with more diversion credits than needed and may want to transfer those credits to Handler A. A simple example to illustrate this situation follows. In this example, we will assume a restricted percentage of 40 percent has been established.

Handler	Receipts (pounds)	Restricted obligation (pounds)	Exports (pounds)	Grower diversions (pounds)	Excess diversion credits (pounds)
A	100,000	40,000	0	0	(40,000)
B	100,000	40,000	70,000	0	30,000
C	100,000	40,000	0	50,000	10,000

In this case, Handler A needs diversion credits totaling 40,000 pounds to meet his or her restricted obligation, while Handlers B and C have excess credits representing 40,000 pounds of cherries. If Handler A could receive Handler B's and C's excess diversion credits, he or she could use them to fulfill Handler A's restricted obligation. Otherwise, Handler A would have to divert 40,000 pounds of cherries (by destroying them, for example) or put them in the inventory reserve. With the ability to transfer diversion credits, Handler A could acquire excess credits from Handlers B and C. Handler A would benefit by being able to process all of his or her cherries for free use. Handlers B and C (and their growers) would benefit by being compensated for their diversions, including those above the required amount.

Both the transferring handlers' and the receiving handler's growers would benefit. Also, the overall quality of the crop marketed could be improved. This would serve to increase consumer confidence and acceptance, thereby strengthening demand for tart cherries. This would benefit the U.S. tart cherry industry as a whole.

Additionally, if the transfer of diversion credits were not allowed, the market could be shorted. This would have a detrimental impact on the tart cherry industry. Again, we will use the above illustration and assume these three handlers comprise the entire industry.

Handler	Receipts	Restricted obligation	Excess diversions	"Free" sales	
				With transfers	Without transfers
A	100,000	40,000	(40,000)	100,000	60,000
B	100,000	40,000	30,000	30,000	30,000
C	100,000	40,000	10,000	50,000	50,000
Total	300,000	120,000	0	180,000	140,000

With a 60 percent free percentage, it would be expected that 180,000 pounds of cherries would be available for sale as free percentage cherries (60 percent of total receipts of 300,000 pounds). As shown above, without the ability to transfer diversion credits, the total volume of "free" cherries available to market would be only 140,000 pounds. This would be well below the 180,000 pounds deemed necessary to meet market demand. This would hamper the industry's efforts to expand markets for its products. Allowing transfers of diversion certificates therefore has a positive impact on the industry.

Grower Diversion Certificates

Section 930.58 provides that a grower may voluntarily choose to divert all or a portion of his or her cherries. Typically, this is accomplished by leaving cherries in the orchard unharvested, although other means are provided as well. Upon diversion in accordance with order provisions, the Board issues the grower a diversion certificate which the grower may then offer to handlers in lieu of delivering cherries. Handlers may then redeem those certificates to meet their restricted obligations.

Section 930.52(d) of the order provides that any district producing a crop which is less than 50 percent of the average annual processed production in that district in the previous 5 years is exempt from any volume regulation in that year. This provision was included in the order to help relieve a district from the burdens of the order in a year in which its processors and growers were already suffering from a severely short crop.

The Board proposed an amendment to § 930.58(a) to provide that any grower diversions completed in a district subsequently exempt from regulation under § 930.52(d) will qualify for diversion credit.

Witnesses at the hearing testified that this is a needed change to the order to reduce the risk growers face in deciding whether or not to divert all or a portion of their crops. The reason such risk exists is primarily due to the difference between the time diversions must take place and the time a district's final production figure is known.

The Board is required to meet on or about July 1 of each crop year to develop its marketing policy and recommend preliminary free and

restricted percentages (if crop conditions so warrant). The marketing policy is typically a week or two after the release of the USDA tart cherry crop estimate in late June. Final free and restricted percentages are not recommended until after the actual crop production figure is available. This is typically not until September, after harvest is complete. This is also when a final determination is made as to whether a district will be covered by regulation in accordance with § 930.52(d).

The record shows that the tart cherry crop is harvested in late June or July. Growers must, therefore, make decisions as to whether to undertake diversion activities before they are certain whether or not their district will be covered by regulation. This occurred in Southwest Michigan in 1997. Based on the USDA estimate, it was expected that this district would be covered by volume regulation during the upcoming crop year. However, the actual crop came in at less than 50 percent of the prior 5-year average production in that district, and Southwest Michigan (District 3) was exempt from regulation.

Witnesses testified that growers who divert their crops in anticipation of a volume regulation should not be penalized for that decision because the USDA crop estimate indicates their district will be regulated, but it turns out it is not. If those growers' diversion certificates become invalid, they receive nothing for the cherries they diverted. If their diversions continue to qualify for credit, however, handlers who accept those diversion certificates compensate the growers for them.

Without this amendment, the record shows that growers in some districts (where application of volume regulation is uncertain) could be forced into harvesting their crops. This would be contrary to the program objective of balancing tart cherry supplies with market demand.

This amendment should benefit tart cherry growers who choose to divert cherries in anticipation of a volume regulation. It should also contribute to the supply management objectives of the program, which would benefit the U.S. tart cherry industry as a whole.

Release of Cherries in the Inventory Reserve

Section 930.51 of the order authorizes the issuance of volume regulations for tart cherries in the form of free and restricted percentages. Section 930.50(i) provides that a handler's restricted percentage cherries must be placed in an inventory reserve or diverted through non-harvest, destruction at a handler's facilities, or shipment into approved secondary outlets.

The order specifies three possible releases of inventory reserves under §§ 930.50 (g) and (j) and 930.54 (a). The first, under § 930.50 (g), releases an additional 10 percent (above the optimum supply level) of the average of the prior 3 years sales if such inventory is available. This release is for market expansion purposes.

The second release, under § 930.50 (j) occurs in years when the expected availability from the current crop plus expected carry-in does not fulfill the optimum supply (100 percent of the average annual sales in the prior 3 years plus the desirable carry-out). This release is made to all handlers holding primary inventory reserves and is a required release to be made by the Board if the above conditions are met and reserve cherries are available. This provision is intended to assure that inventory reserves are utilized to stabilize supplies available on the market. Under this authority, cherries released from the reserve can be sold in any market.

The third release is authorized under § 930.54 (a) which allows the Board to recommend to the Secretary a release of a portion or all of the primary (and secondary) reserve. To make this release, the Boards needs to determine that the total available supplies for use in commercial outlets do not equal the amount needed to meet the demand in such outlets.

The Board recommended an amendment to § 930.54 to provide a fourth option for a reserve release. Specifically, it proposed that a portion or all of the primary and/or secondary inventory reserve may be released for sale in certain designated markets.

Witnesses at the hearing suggested that the industry (through the Board) needs more flexibility in determining how to utilize inventory reserves. One witness opined that limited releases of reserves during years of non-regulation may be necessary to maintain markets that are available for diversion credits during years of regulation. The example given dealt with sales to export markets other than Canada and Mexico. In years of volume regulation, sales of cherries to these markets are eligible for diversion credits that handlers may use to meet their restricted obligations.

In developing its marketing policy and determining whether a surplus exists, the optimum supply is compared with available supplies. The optimum supply is defined as average sales over the last 3 years, minus sales qualifying for diversion credit. Thus, the optimum supply measures the volume of cherries needed to fill demand in the primary market. If anticipated supplies exceed demand in the primary market, a volume regulation may be issued. Restricted percentage cherries are then used to fill these secondary markets.

If anticipated supplies are reasonably in balance with demand in the primary market, no volume regulation would be issued. Since all of a handler's cherries would then be ''free'' percentage cherries, he or she would likely attempt to sell all those cherries in the primary market because returns tend to be higher in that market. This could result in few cherries being made available for sale in secondary markets (such as exports).

The record shows that the tart cherry industry needs to continue its efforts to expand markets. A critical aspect of this effort is to ensure that supplies are available to fill needs in developing markets. If, for example, an export market is developed over the course of time, and then cherries are not available to supply that market, that market may be lost to the industry. The Board's proposal would allow a release of inventory reserves to meet the needs of these specific markets. This should contribute to the long-run health of the industry.

Another witness suggested that a limited release should also be possible for specific types of cherry products. He stated that over time, the mix of products offered by the tart cherry industry has changed considerably. New product development should continue to be encouraged to expand marketing opportunities for the industry. Releases of inventory reserves can play a part in this endeavor.

The witness gave a hypothetical situation using dried cherries as an example. He said that if demand for dried cherries was very strong, and supplies of that product from the current year's crop were insufficient to meet that demand, releases of that product from the inventory reserve should be authorized.

This amendment should contribute to the industry's efforts to balance tart cherry supplies with market demand. It will give the Board more flexibility in determining when inventory reserve cherries should be released for use. It will not impose any additional regulatory requirements on tart cherry handlers.

Ten Percent Reserve Release for Market Expansion

Section 930.51 of the order authorizes the issuance of volume regulations for tart cherries in the form of free and restricted percentages. Section 930.50(i) provides that a handler's restricted

percentage cherries must be placed in an inventory reserve or diverted into approved secondary outlets.

Section 930.50 provides that any volume regulation make available as free percentage cherries an ''optimum supply'' of tart cherries. The optimum supply is defined as the average sales of the prior 3 years (minus sales of cherries qualifying for diversion credit) plus a desired carry-out. Section 930.50(g) further provides that in addition to the free market tonnage percentage cherries, the Board must make available tonnage equal to 10 percent of the average sales of the prior 3 years for market expansion.

The Board proposed amending § 930.50(g) to specify that the 10 percent reserve release only apply during years when volume regulation is in effect.

The record shows that the 10 percent reserve release provision was made a part of the order in large part due to USDA policy guidelines. The Secretary's Guidelines for Fruit, Vegetable, and Specialty Crop Marketing Orders (Guidelines) state that, under volume control programs, primary markets should have available a quantity equal to 110 percent of recent years' sales in those outlets before the Secretary would approve secondary market allocation or pooling. This is to assure plentiful supplies for consumers and for market expansion while retaining the mechanism for dealing with burdensome supply situations.

Witnesses in support of the Board's proposal stated that allowing for and encouraging market growth in years of surplus supplies is sensible. In fact, several witnesses stated that an important objective of the tart cherry industry and the marketing order program is to expand markets for tart cherries. This is supported, for example, by the authorization of diversion credits for new product and new market development.

Several witnesses spoke against the 10 percent release during years of no volume regulation, however. Two concerns were expressed in this regard. First, the release of inventories in a year in which supplies and market demand are reasonably in balance results in an oversupply situation. This can be accompanied by reduced grower prices. Second, and probably more important, industry reserves can be depleted. One objective of keeping an inventory reserve is to aid in stabilizing annual supply fluctuations and safeguard against the detrimental impacts of a short crop year.

The record shows that the tart cherry industry experiences cycles in acreage and production. During the phase of the cycle with less bearing acreage and shorter supplies, a short crop year can result in significant shortages of available market supplies. This can curtail continued market demand and market growth. When supplies are short, they can be supplemented by reserve cherries. This would mitigate spikes in prices, which hinder long term market demand. Food manufacturing customers in particular demand a stable supply of product at reasonable prices. Absent a reliable supply, these customers tend to substitute other fruits in their products.

The use of the inventory release option also provides that some surplus supplies in a large crop year with low prices can be carried over to short crop, high price years. This results in improved revenues for growers and processors. The use of the inventory reserve option also provides an alternative to grower diversions (i.e., non-harvest).

Several witnesses used the 1999–2000 crop year to show the effects of a reserve release during a year of no regulation. During that year, the crop was 251.0 million pounds which, when added to a carryover from the previous crop year of 38.0 million pounds, yielded total available supplies of 289.0 million pounds. With the optimum supply at 285.0 million pounds, the Board found that supplies were reasonably in line with market demand, and recommended no volume regulation be implemented.

At the beginning of the crop year, industry reserves totaled 28.4 million pounds. Four million pounds were released early in the crop year to meet unanticipated demand, leaving 24.4 million pounds in the reserve when it came time for the release for market expansion. Ten percent of the 3-year average sales figure meant that 28.5 million pounds should have been released for market expansion; however, there were only 24.4 million pounds in the inventory reserve, so the entire reserve was released.

Witnesses claimed that the release of reserves in the current crop year may result in a surplus supply of cherries in the marketplace. This could put a downward pressure on price, and could result in a higher carryover into the next crop year. This could mean a greater surplus in 2000–2001, which could result in a higher restricted percentage and greater probability of cherries being left in the orchard unharvested.

Ultimately, these releases could result in less economic incentive to place cherries in the reserve because they could be released at the wrong time and return little to growers. With less incentive to participate in the inventory reserve, more cherries would likely be diverted by growers through non-harvest. Overall grower returns would be lower, and long term market losses may occur.

This amendment should contribute to the industry's efforts to balance tart cherry supplies with market demand. It will give the Board more flexibility in determining when inventory reserve cherries should be released for use. It will not impose any additional regulatory requirements on tart cherry handlers.

Assessments on All Cherries Handled

Section 930.40 of the order authorizes the Board to incur such expenses as the Secretary finds are reasonable and necessary for it to administer the tart cherry marketing order program. Section 930.40 further provides that the Board's expenses be covered by income from handler assessments.

Section 930.41 provides that handlers pay their pro rata share of the Board's expenses. Each handler's share is determined by applying the established assessment rate(s) to the volume of cherries each handler handles during a crop year. Section 930.41 further provides that handlers are exempt from paying assessments on cherries that are diverted in accordance with § 930.59, including cherries represented by grower diversion certificates issued under § 930.58. Cherries devoted to exempt uses under § 930.62 are also free from assessments.

The Board recommended that § 930.41 be amended to provide that all cherries processed and sold by handlers be subject to assessments. The only cherries that would be exempt from assessments would be those diverted in-orchard by growers, and those diverted by handlers through destruction at their plants.

Proponent witnesses testifying in support of this change stated that all processed cherries should be subject to assessments because handlers profit from the sale of these cherries. This is because each pound of fruit processed increases the handler's overall profitability by reducing the per unit cost of processing. This is true even if the cherries are used in an outlet approved for diversion credit.

The record shows that handlers have different ways of meeting their restricted obligations. Their decisions are based on their own marketing strategies. Some handlers take advantage of marketing their products in eligible diversion outlets, while others either cannot or do not do so. Witnesses suggested that providing an exemption from assessments to handlers who choose to divert their cherries through

sales in those designated outlets creates a competitive advantage over their competitors who do not do so. It was their opinion that if a substantial volume of cherries is diverted by certain handlers, the burden of financing the program increases on other handlers. Those in support of assessing all processed cherries concluded that subjecting all processed cherries to the assessment provisions of the order would eliminate this unintended advantage.

Additionally, the record shows that a large portion of the Board's annual expenses is incurred for oversight of compliance activities related to diversion credits. For example, for those export sales eligible for diversion credit, handlers are required to submit proof of export. The documentation typically consists of warehouse receipts, bills of lading, overseas bills of lading, and other documents proving the cherries were exported. The Board staff reviews the documentation submitted by each handler for sufficiency, requests additional documentation if necessary, and issues diversion certificates upon proof of compliance with order requirements. Similar activities are undertaken with respect to sales in other designated diversion markets (e.g., new product development). Witnesses stated that those handlers who take advantage of these order provisions should pay their share of the costs of enforcing those provisions.

One witness also stated that an advantage of this amendment would be that it would broaden the assessment base under the order. This would lower the assessment rate needed to effectively administer the program.

This amendment would increase assessment obligations on handlers who choose to divert their restricted percentage cherries in approved outlets. However, it would also tend to result in a more reasonable assessment system.

Uniform Assessment Rate

As discussed in the preceding section, §§ 930.40 and 930.41 of the order provide that the Board may incur certain expenses, and that the funds to defray those expenses be paid by handlers through assessments. Section 930.41 also provides, among other things, that the assessment rate(s) recommended by the Board and approved by the Secretary must compensate for the differences in the amounts of cherries used for various cherry products and the relative market values of those products.

The Board recommended that § 930.41 be amended to provide that a uniform assessment rate be established for cherries used in any or all products. This would be true unless the Board decided to consider the volumes of cherries used for various products and their relative values; if that were the case, the Board could recommend differential assessment rates if warranted.

The record shows that at the time the order was promulgated, proponents of the program supported different assessment rates being established for cherries used for various products. In their testimony, they suggested that high value products such as frozen, canned or dried cherries be assessed at one rate, and low value products such as juice concentrate and puree be assessed at one-half that rate.

Proponents of the Board's recommended amendment stated that the order should not require one rate for certain products and twice that rate for others. They stated that while a two-tiered assessment rate scheme may be appropriate in some years, it may not be in others. They cited the fact that the absolute and relative market values of various tart cherry products fluctuate from year to year.

One witness testified, for example, that producer returns for cherries used for juice concentrate are comparable to those for other products. He stated that cherry juice concentrate was selling for about $17 per gallon. Subtracting estimated handling charges of $5.81 per gallon, the net return to the grower would be an estimated $11.19. In Washington, where about 50 pounds are required to make a gallon of concentrate, growers would receive 22 cents per pound. In Michigan, where it takes approximately 90 pounds of cherries to make a gallon of concentrate, growers would receive 12 cents per pound. This witness stated that grower returns in this range are comparable to returns available for other products.

The conclusion of the proponent witnesses was that the Board should have discretion in determining appropriate rates of assessment. They did not believe a two-tiered approach should be mandated.

An opponent of the proposed change stated that the order should continue to require the Board to consider the volume of raw product used in producing various cherry products as well as the relative value of those products in recommending annual assessment rates. He stated that he did not necessarily support two levels of assessment rates, but believed the Board should be required to give due consideration to relevant factors in making its recommendations.

The Department concludes that while there may be justification for establishing different assessment rates for different products, it should not be required under the order. Thus, the amendment to § 930.41 provides that in its deliberations pertaining to appropriate levels of assessment rates, the Board should consider the volume of cherries used in making various products and the relative market value of those products. The assessment rate established may be uniform or may vary among products, based on the Board's analysis.

Implementation of this amendment could result in a single, uniform assessment rate applicable to all cherries. Such action would likely increase the rate established for cherries used for juice concentrate and puree, and could result in a lower rate for cherries used for other products. The impact of any such action would be analyzed by the Board and USDA prior to its effectuation.

Crop Production Estimate

Section 930.50 of the order requires the Board to develop an annual marketing policy. This policy serves as the basis for determining the level of volume regulation needed in a given crop year. First, the Board determines the ''optimum supply'' which is defined as the average sales of cherries in the past three years plus the desirable carry-out. Next, the Board takes the crop forecast for the upcoming year and subtracts from it the optimum supply (less the carry-in). If the remainder is positive, it represents a surplus in supplies, supporting the use of volume regulation. Section 930.50 prescribes that the Board must use the official USDA crop estimate as its crop forecast.

The Board's amendment proposal would allow the Board to use a crop estimate other than the official USDA crop estimate in its marketing policy.

The record shows that USDA bases its pre-harvest estimate on two methods. In Michigan, an objective yield survey is done by the State. Such a survey is based on the actual count of fruit on the tree, the number of trees per acre, and the acres in production. In the other producing States, subjective yield surveys are done by those States. This method entails canvassing tart cherry growers and handlers to obtain their assessment of the upcoming year's crop.

The Michigan crop survey costs a total of $60,000 per year. Of this total, the Board pays $24,000. The Board's share was expected to increase to half of the total in 2001. Concern was expressed at the hearing that if the industry decides to no longer contribute

to the cost of the Michigan State survey, that State would likely discontinue its objective yield surveys and turn to subjective yield surveys. This could result in a less reliable crop estimate than is currently available. This is of particular concern because Michigan produces more than 70 percent of the U.S. tart cherry crop.

Witnesses in support of this proposal stated that, in some years, USDA's pre-harvest crop estimate may not be accurate enough due to quickly changing crop conditions. They stated that current order provisions prohibit the Board from using any other estimate even if the majority of Board members, with their years of experience in the industry, believe USDA's estimate in a given year is inaccurate. Using the most accurate crop estimate available in deriving preliminary free and restricted percentages is important because growers and handlers make decisions based in part on those percentages. For example, growers decide whether to divert or harvest their crops; these decisions are irrevocable. Handlers also make pack and marketing plans based in part on the expected level of regulation. If actual harvest varies significantly from the pre-harvest estimate, growers and handlers could suffer economic harm. Using the most accurate information available is therefore necessary to enhance industry decision making.

One witness pointed to the situation faced by district 3 (Southern Michigan) growers in 1997. As previously discussed under Material Issue Number 9, at the time the Board developed its marketing policy, indications were that district 3 would be regulated that year. Subsequent to harvest, however, it was determined that volume regulation would not apply to district 3 cherries that year. Growers who made decisions to divert their crops based on the Board's marketing policy estimates found themselves with diversion certificates that were of no value.

The record shows that the USDA estimate should be used by the Board unless two things happen. The first would be that the Board would have to agree that the USDA estimate was inaccurate. The second would be that the Board would have to agree on another estimate or estimates to use. Both these actions would require concurrence by at least two-thirds of the Board members. This would safeguard against the possibility of some members attempting to manipulate the crop estimate to impact the level of volume restriction.

In addition, witnesses testified that other estimates used by the Board would have to be from other reliable, independent sources, and would be averaged in with the USDA estimate. Currently available is an annual estimate made by the Michigan Food Processors Association. Other possible sources include the Michigan Agricultural Cooperative Marketing Association and individual State grower associations.

This amendment provides the Board with more flexibility in developing its marketing policy and recommending preliminary free and restricted percentages. To the extent that the Board's decision making improves, the entire U.S. tart cherry industry would benefit.

The collection of information under the marketing order would not be affected by these amendments to the marketing order. Current information collection requirements for Part 930 are approved by OMB under OMB number 0581–0177.

As with all Federal marketing order programs, reports and forms are periodically reviewed to reduce information requirements and duplication by industry and public sector agencies.

The Department has not identified any relevant Federal rules that duplicate, overlap or conflict with this final rule. These amendments are designed to enhance the administration and functioning of the marketing order to the benefit of the industry.

Board meetings regarding these amendments as well as the hearing dates were widely publicized throughout the tart cherry industry, and all interested persons were invited to attend the meetings and the hearing and participate in Board deliberations on all issues. All Board meetings and the hearing were public forums and all entities, both large and small, were able to express views on these issues.

Civil Justice Reform

The amendments contained in this rule have been reviewed under Executive Order 12988, Civil Justice Reform. They are not intended to have retroactive effect. The amendments will not preempt any State or local laws, regulations, or policies, unless they present an irreconcilable conflict with the amendments.

The Act provides that administrative proceedings must be exhausted before parties may file suit in court. Under section 608c(15)(A) of the Act, any handler subject to an order may file with the Secretary a petition stating that the order, any provision of the order, or any obligation imposed in connection with the order is not in accordance with law and request a modification of the order or to be exempted therefrom. A handler is afforded the opportunity for a hearing on the petition. After the hearing the Secretary would rule on the petition. The Act provides that the district court of the United States in any district in which the handler is an inhabitant, or has his or her principal place of business, has jurisdiction to review the Secretary's ruling on the petition, provided an action is filed not later than 20 days after date of the entry of the ruling.

Order Amending the Order Regulating the Handling of Tart Cherries Grown in the States of Michigan, New York, Pennsylvania, Oregon, Utah, Washington, and Wisconsin

Findings and determinations

The findings and determinations hereinafter set forth are supplementary and in addition to the findings and determinations previously made in connection with the issuance of the order; and all of said previous findings and determinations are hereby ratified and affirmed, except insofar as such findings and determinations may be in conflict with the findings and determinations set forth herein.

(a) *Findings and Determinations Upon the Basis of the Hearing Record.*

Pursuant to the provisions of the Agricultural Marketing Agreement Act of 1937, as amended (7 U.S.C. 601 *et seq.*), and the applicable rules of practice and procedure effective thereunder (7 CFR part 900), a public hearing was held upon the proposed amendments to the Marketing Agreement and Order No. 930 (7 CFR part 930), regulating the handling of tart cherries grown in the States of Michigan, New York, Pennsylvania, Oregon, Utah, Washington, and Wisconsin.

Upon the basis of the evidence introduced at such hearing and the record thereof, it is found that:

(1) The marketing agreement and order, as amended, and as hereby further amended, and all of the terms and conditions thereof, will tend to effectuate the declared policy of the Act;

(2) The marketing agreement and order, as amended, and as hereby further amended, regulate the handling of tart cherries grown in the production area in the same manner as, and is applicable only to persons in the respective classes of commercial and industrial activity specified in the marketing order upon which hearings have been held;

(3) The marketing agreement and order, as amended, and as hereby

further amended, are limited in application to the smallest regional production area which is practicable, consistent with carrying out the declared policy of the Act, and the issuance of several orders applicable to subdivisions of the production area would not effectively carry out the declared policy of the Act;

(4) The marketing agreement and order, as amended and as hereby further amended, prescribe, insofar as practicable, such different terms applicable to different parts of the production area as are necessary to give due recognition to the differences in the production and marketing of tart cherries grown in the production area; and

(5) All handling of tart cherries grown in the production area is in the current of interstate or foreign commerce or directly burdens, obstructs, or affects such commerce.

(b) *Additional findings.*

It is necessary and in the public interest to make these amendments to the order effective not later than one day after publication in the **Federal Register**.

A later effective date would unnecessarily delay implementation of the amendments including the reallocation of Board membership. In addition, the informal rulemaking needed to implement order amendments requires additional time to complete. Therefore, making the effective date one day after publication in the **Federal Register** will allow the amendments, which are expected to be beneficial to the industry, to be implemented as soon as possible.

In view of the foregoing, it is hereby found and determined that good cause exists for making these amendments effective one day after publication in the **Federal Register**, and that it would be contrary to the public interest to delay the effective date for 30 days after publication in the **Federal Register** (Sec. 553(d), Administrative Procedure Act; 5 U.S.C. 551–559).

(c) *Determinations.* It is hereby determined that:

(1) Handlers (excluding cooperative associations of producers who are not engaged in processing, distributing, or shipping tart cherries covered by the order as hereby amended) who, during the period June 1, 2000, through May 31, 2001, handled 50 percent or more of the volume of such cherries covered by said order, as hereby amended, have signed an amended marketing agreement; and

(2) The issuance of this amendatory order is favored or approved by at least two-thirds of the producers who participated in a referendum on the question of approval and who, during the period June 1, 2000, through May 31, 2001 (which has been deemed to be a representative period), have been engaged within the production area in the production of such cherries, such producers having also produced for market at least two-thirds of the volume of such commodity represented in the referendum.

Order Relative to Handling

It is therefore ordered, That on and after the effective date hereof, all handling of tart cherries grown in the States of Michigan, New York, Pennsylvania, Oregon, Utah, Washington and Wisconsin, shall be in conformity to, and in compliance with, the terms and conditions of the said order as hereby amended as follows:

The provisions of the proposed marketing agreement and the order amending the order contained in the Secretary's Decision issued by the Administrator on May 3, 2002, and published in the **Federal Register** on May 10, 2002, shall be and are the terms and provisions of this order amending the order and are set forth in full herein.

List of Subjects in 7 CFR Part 930

Marketing agreements, Reporting and recordkeeping requirements, Tart cherries.

PART 930—TART CHERRIES GROWN IN THE STATES OF MICHIGAN, NEW YORK, PENNSYLVANIA, OREGON, UTAH, WASHINGTON, AND WISCONSIN

1. The authority citation for 7 CFR part 930 continues to read as follows:

Authority: 7 U.S.C. 601–674.

2. Amend § 930.20 as follows:

a. By revising paragraphs (a), (b), (d) and (e);

b. Redesignating paragraphs (f) and (g) as paragraphs (g) and (h); and

c. Adding new paragraphs (f) and (i).

The additions and revisions read as follows:

§ 930.20 Establishment and membership.

(a) There is hereby established a Cherry Industry Administrative Board, the membership of which shall be calculated in accordance with paragraph (b) of this section. The number of Board members may vary, depending upon the production levels of the districts. All but one of these members shall be qualified growers and handlers selected pursuant to this part, each of whom shall have an alternate having the same qualifications as the member for whom the person is an alternate. One member of the Board shall be a public member who, along with his or her alternate, shall be elected by the Board from the general public.

(b) District representation on the Board shall be based upon the previous three-year average production in the district and shall be established as follows:

(1) Up to and including 10 million pounds shall have 1 member;

(2) Greater than 10 and up to and including 40 million pounds shall have 2 members;

(3) Greater than 40 and up to and including 80 million pounds shall have 3 members; and

(4) Greater than 80 million pounds shall have 4 members; and

(5) Allocation of the seats in each district shall be as follows but subject to the provisions of paragraphs (d), (e) and (f) of this section:

District type	Grower members	or	Handler members
Up to and including 10 million pounds	1		1
More than 10 and up to 40 million pounds	1		1
More than 40 and up to 80 million pounds	1		2
More than 80 million pounds	2		2

* * * * *

(d) The ratio of grower to handler representation in districts with three members shall alternate each time the term of a Board member from the representative group having two seats expires. During the initial period of the order, the ratio shall be as designated in paragraph (b) of this section.

(e) Board members from districts with one seat may be either grower or handler members and will be nominated and elected as outlined in § 930.23.

(f) If the 3-year average production of a district changes so that a different number of seats should be allocated to the district, then the Board will be reestablished by the Secretary, and such seats will be filled according to the applicable provisions of this part. Each district's 3-year average production shall be recalculated annually as soon as possible after each season's final production figures are known.

* * * * *

(i) The Board, with the approval of the Secretary, may establish rules and regulation's necessary and incidental to the administration of this section.

3. Revise 930.28 to read as follow:

§ 930.28 Alternate members.

An alternate member of the Board, during the absence of the member for whom that member serves as an alternate, shall act in the place and stead of such member and perform such other duties as assigned. However, if a member is in attendance at a meeting of the Board, an alternate member may not act in the place and stead of such member. In the event a member and his or her alternate are absent from a meeting of the Board, such member may designate, in writing and prior to the meeting, another alternate to act in his or her place: *Provided,* that such alternate represents the same group (grower or handler) as the member. In the event of the death, removal, resignation or disqualification of a member, the alternate shall act for the member until a successor is appointed and has qualified.

4. Amend 930.32 by revising paragraph (a) to read as follows:

§ 930.32 Procedure.

(a) Two-thirds of the members of the Board, including alternates acting for absent members, shall constitute a quorum. For any action of the Board to pass, at least two-thirds of the entire Board must vote in support of such action.

* * * * *

5. Amend § 930.41 by revising paragraphs (c) and (f) to read as follows:

§ 930.41 Assessments.

* * * * *

(c) As a pro rata share of the administrative, inspection, research, development, and promotion expenses which the Secretary finds reasonable and likely to be incurred by the Board during a fiscal period, each handler shall pay to the Board assessments on all cherries handled, as the handler thereof, during such period: *Provided,* a handler shall be exempt from any assessment only on the tonnage of handled cherries that either are diverted by destruction at the handler's facilities according to § 930.59 or are cherries represented by grower diversion certificates issued pursuant to § 930.58(b) and acquired by handlers as described in § 930.59.

* * * * *

(f) Assessments shall be calculated on the basis of pounds of cherries handled. The established assessment rate may be uniform, or may vary dependent on the product the cherries are used to manufacture. In recommending annual assessment rates, the Board shall consider:

(1) The differences in the number of pounds of cherries utilized for various cherry products; and

(2) The relative market values of such cherry products.

* * * * *

6. Amend § 930.50 by revising paragraphs (a), (b) and (g) to read as follows:

§ 930.50 Marketing policy.

(a) *Optimum supply.* On or about July 1 of each crop year, the Board shall hold a meeting to review sales data, inventory data, current crop forecasts and market conditions in order to establish an optimum supply level for the crop year. The optimum supply volume shall be calculated as 100 percent of the average sales of the prior three years reduced by average sales that represent dispositions of exempt cherries and restricted percentage cherries qualifying for diversion credit for the same three years, unless the Board determines that it is necessary to recommend otherwise with respect to sales of exempt and restricted percentage cherries, to which shall be added a desirable carry-out inventory not to exceed 20 million pounds or such other amount as the Board, with the approval of the Secretary, may establish. This optimum supply volume shall be announced by the Board in accordance with paragraph (h) of this section.

(b) *Preliminary percentages.* On or about July 1 of each crop year, the Board shall establish a preliminary free market tonnage percentage which shall be calculated as follows: from the optimum supply computed in paragraph (a) of this section, the Board shall deduct the carry-in inventory to determine the tonnage requirements (adjusted to a raw fruit equivalent) for the current crop year which will be subtracted from the current year USDA crop forecast or by an average of such other crop estimates the Board votes to use. If the resulting number is positive, this would represent the estimated overproduction which would be the restricted tonnage. This restricted tonnage would then be divided by the sum of the crop forecast(s) for the regulated districts to obtain a preliminary restricted percentage, rounded to the nearest whole number, for the regulated districts. If subtracting the current crop year requirement, computed in the first sentence from the current crop forecast, results in a negative number, the Board shall establish a preliminary free market tonnage percentage of 100 percent with a preliminary restricted percentage of zero. The Board shall announce these preliminary percentages in accordance with paragraph (h) of this section.

* * * * *

(g) *Additional tonnage to sell as free tonnage.* In addition, the Board, in years when restricted percentages are established, shall make available tonnage equivalent to an additional 10 percent, if available, of the average sales of the prior 3 years, as defined in paragraph (a) of this section, for market expansion.

* * * * *

7. Amend § 930.51 by revising paragraph (c) to read as follows:

§ 930.51 Issuance of volume regulations.

* * * * *

(c) That portion of a handler's cherries that are restricted percentage cherries is the product of the restricted percentage imposed under paragraph (a) of this section multiplied by the tonnage of cherries, originating in a regulated district, handled, including those diverted according to § 930.59, by that handler in that fiscal year.

* * * * *

8. Amend § 930.52 by revising paragraph (a) to read as follows:

§ 930.52 Establishment of districts subject to volume regulation.

(a) The districts in which handlers shall be subject to any volume regulations implemented in accordance with this part shall be those districts in which the average annual production of cherries over the prior 3 years has exceeded 6 million pounds. Handlers shall become subject to volume regulation implemented in accordance with this part in the crop year that follows any 3-year period in which the 6-million pound average production requirement is exceeded in that district.

* * * * *

9. Revise § 930.54 to read as follows:

§ 930.54 Prohibition on the use or disposition of inventory reserve cherries.

Cherries that are placed in inventory reserve pursuant to the requirements of § 930.50, § 930.51, § 930.55, or § 930.57 shall not be used or disposed of by any handler or any other person except as provided in § 930.50 or in paragraphs (a), (b), or (c) of this section.

(a) If the Board determines that the total available supplies for use in commercial outlets are less than the amount needed to meet the demand in such outlets, the Board may recommend to the Secretary that a portion or all of the primary and/or secondary inventory reserve cherries be released for such use.

(b) The Board may recommend to the Secretary that a portion or all of the

primary and/or secondary inventory reserve cherries be released for sale in certain designated markets. Such designated markets may be defined in terms of the use or form of the cherries.

(c) Cherries in the primary and/or secondary inventory reserve may be used at any time for uses exempt from regulation under § 930.62.

10. Amend § 930.58 by revising paragraph (a) to read as follows:

§ 930.58 Grower diversion privilege.

(a) *In general.* Any grower may voluntarily elect to divert, in accordance with the provisions of this section, all or a portion of the cherries which otherwise, upon delivery to a handler, would become restricted percentage cherries. Upon such diversion and compliance with the provisions of this section, the Board shall issue to the diverting grower a grower diversion certificate which such grower may deliver to a handler, as though there were actual harvested cherries. Any grower diversions completed in accordance with this section, but which are undertaken in districts subsequently exempted by the Board from volume regulation under § 930.52(d), shall qualify for diversion credit.

* * * * *

11. Revise § 930.59 to read as follows:

§ 930.59 Handler diversion privilege.

(a) *In general.* Handlers handling cherries harvested in a regulated district may fulfill any restricted percentage requirement in full or in part by acquiring diversion certificates or by voluntarily diverting cherries or cherry products in a program approved by the Board, rather than placing cherries in an inventory reserve. Upon voluntary diversion and compliance with the provisions of this section, the Board shall issue to the diverting handler a handler diversion certificate which shall satisfy any restricted percentage or diversion requirement to the extent of the Board or Department inspected weight of the cherries diverted.

(b) *Eligible diversion.* Handler diversion certificates shall be issued to handlers only if the cherries are diverted in accordance with the following terms and conditions or such other terms and conditions that the Board, with the approval of the Secretary, may establish. Such diversion may take place in any form which the Board, with the approval of the Secretary, may designate. Tart cherry juice and juice concentrate may receive diversion credit but only if diverted in forms approved under the terms of this section. Such forms may include, but are not limited to:

(1) Contribution to a Board-approved food bank or other approved charitable organization;

(2) Use for new product and new market development;

(3) Export to designated destinations; or

(4) Other uses or disposition, including destruction of the cherries at the handler's facilities.

(c) *Notification.* The handler electing to divert cherries through means authorized under this section shall first notify the Board of such election. Such notification shall describe in detail the manner in which the handler proposes to divert cherries including, if the diversion is to be by means of destruction of the cherries, a detailed description of the means of destruction and ultimate disposition of the cherries. It shall also contain an agreement that the proposed diversion is to be carried out under the supervision of the Board and that the cost of such supervision is to be paid by the handler. Uniform fees for such supervision may be established by the Board, pursuant to rules and regulations approved by the Secretary.

(d) *Diversion certificate.* The Board shall conduct such supervision of the handler's diversion of cherries under paragraph (c) of this section as may be necessary to assure that the cherries are diverted as authorized. After the diversion has been completed, the Board shall issue to the diverting handler a handler diversion certificate indicating the weight of cherries which may be used to offset any restricted percentage requirement.

(e) *Transfer of certificates.* Within such restrictions as may be prescribed in rules and regulations, including but not limited to procedures for transfer of diversion credit and limitations on the type of certification eligible for transfer, a handler who acquires diversion certificates representing diverted cherries during any crop year may transfer such certificates to another handler or handlers. The Board must be notified in writing whenever such transfers take place during a crop year.

(f) The Board, with the approval of the Secretary, may establish rules and regulations necessary and incidental to the administration of this section.

12. Revise § 930.62 to read as follows:

§ 930.62 Exempt uses.

(a) The Board, with the approval of the Secretary, may exempt from the provisions of § 930.41, § 930.44, § 940.51, § 930.53, or § 930.55 through § 930.57 cherries for designated uses. Such uses may include, but are not limited to:

(1) New product and new market development;

(2) Export to designated destinations;

(3) Experimental purposes; or

(4) For any other use designated by the Board, including cherries processed into products for markets for which less than 5 percent of the preceding 5-year average production of cherries were utilized.

(b) The Board, with the approval of the Secretary, shall prescribe such rules, regulations, and safeguards as it may deem necessary to ensure that cherries handled under the provisions of this section are handled only as authorized.

(c) Diversion certificates shall not be issued for cherries which are used for exempt purposes; *Provided,* that growers engaging in such activities under the authority of § 930.58 shall be issued diversion certificates for such activities.

Dated: July 31, 2002.

A.J. Yates,

Administrator, Agricultural Marketing Service.

[FR Doc. 02–19672 Filed 8–7–02; 8:45 am]

BILLING CODE 3410–02–P

Federal Register

Thursday,
August 8, 2002

Part V

Department of Education

34 CFR Part 600 et al.

Postsecondary Education; Federal Perkins Loan Program, et al.; Proposed Rule

DEPARTMENT OF EDUCATION

34 CFR Parts 600, 668, 673, 675, 682, 685, 690, and 694

RIN 1845–AA24

Institutional Eligibility Under the Higher Education Act of 1965, as Amended; Student Assistance General Provisions; General Provisions for the Federal Perkins Loan Program, Federal Work-Study Program, and Federal Supplemental Educational Opportunity Grant Program; Federal Work-Study Programs; Federal Family Education Loan Program; William D. Ford Federal Direct Loan Program; Federal Pell Grant Program; and Gaining Early Awareness and Readiness for Undergraduate Programs

AGENCY: Office of Postsecondary Education, Department of Education.

ACTION: Notice of proposed rulemaking.

SUMMARY: The Secretary proposes to amend the Institutional Eligibility Under the Higher Education Act of 1965, as Amended; Student Assistance General Provisions; General Provisions for the Federal Perkins Loan (Perkins Loan) Program, Federal Work-Study Program, and Federal Supplemental Educational Opportunity Grant (FSEOG) Program; Federal Work-Study (FWS) Programs; Federal Family Education Loan (FFEL) Program; William D. Ford Federal Direct Loan (Direct Loan) Program; Federal Pell Grant (Pell Grant) Program; and Gaining Early Awareness and Readiness for Undergraduate Programs (GEAR UP) regulations. The Secretary is amending these regulations to reduce administrative burden for program participants, to provide benefits to students and borrowers, and to protect taxpayers' interests.

DATES: We must receive your comments on or before October 7, 2002.

ADDRESSES: Address all comments about these proposed regulations to Wendy Macias, U.S. Department of Education, P.O. Box 33076, Washington, DC 20033–3076. We encourage commenters to use e-mail because paper mail to the Washington area may be subject to delay, but please use one method only to provide your comments. If you comment via e-mail, we will send a return e-mail acknowledging our receipt of your comments. If you choose to send your comments through the Internet, use the following address: *ProgramNPRM@ed.gov.*

You must include the term ''Team II Program Issues'' in the subject line of your electronic message.

If you want to comment on the information collection requirements, you must send your comments to the Office of Management and Budget at the address listed in the Paperwork Reduction Act section of this preamble. You may also send a copy of these comments to the Department representative named in this section.

FOR FURTHER INFORMATION CONTACT: Ms. Wendy Macias Telephone: (202) 502–7526 or via the Internet: *Wendy.Macias@ed.gov.*

If you use a telecommunications device for the deaf (TDD), you may call the Federal Information Relay Service (FIRS) at 1–800–877–8339.

Individuals with disabilities may obtain this document in an alternative format (e.g., Braille, large print, audiotape, or computer diskette) on request to the contact person listed under **FOR FURTHER INFORMATION CONTACT.**

SUPPLEMENTARY INFORMATION:

Invitation To Comment

We invite you to submit comments regarding these proposed regulations. To ensure that your comments have maximum effect in developing the final regulations, we urge you to identify clearly the specific section or sections of the proposed regulations that each of your comments addresses and to arrange your comments in the same order as they are discussed in the Significant Proposed Regulations section of this document.

Section 482(c)(1) of the Higher Education Act of 1965, as amended (HEA) provides that in order for a regulatory change to be effective for the start of an award year on July 1, it must have been published in final form in the **Federal Register** no later than the preceding November 1. The Secretary's intent is to publish final rules resulting from this Notice of Proposed Rulemaking (NPRM) by November 1, 2002, making the new rules effective on July 1, 2003. However, section 482(c)(2) of the HEA allows the Secretary to designate regulatory provisions that an entity subject to the provision may, at its option, choose to implement earlier. Therefore, we are seeking suggestions on which of the proposed regulatory provisions in this NPRM, if finalized, should be so designated.

Section 482 of the HEA does not apply to regulations governing programs other than the Federal student aid programs. Therefore, if the proposed regulations on GEAR UP included in this NPRM are finalized, they would be effective upon the date that the final regulations are published in the **Federal Register**.

We also invite you to assist us in complying with the specific requirements of Executive Order 12866 and its overall requirement of reducing regulatory burden that might result from these proposed regulations. Please let us know of any further opportunities we should take to reduce potential costs or increase potential benefits while preserving the effective and efficient administration of the programs.

During and after the comment period, you may inspect all public comments about these proposed regulations at 1990 K Street, NW., (8th Floor) Washington, DC, between the hours of 8:30 a.m. and 4 p.m., Eastern time, Monday through Friday of each week except Federal holidays. If you want to schedule an appointment to inspect the public comments, please contact the person listed under **FOR FURTHER INFORMATION CONTACT.**

Assistance to Individuals With Disabilities in Reviewing the Rulemaking Record

On request, we will supply an appropriate aid, such as a reader or print magnifier, to an individual with a disability who needs assistance to review the comments or other documents in the public rulemaking record for these proposed regulations. If you want to schedule an appointment for this type of aid, please contact the person listed under **FOR FURTHER INFORMATION CONTACT.**

Negotiated Rulemaking

Section 492 of the HEA requires the Secretary, before publishing any proposed regulations for programs authorized by Title IV of the HEA, to obtain public involvement in the development of the proposed regulations. After obtaining advice and recommendations from individuals and representatives of groups involved in the Federal student financial assistance programs, the Secretary must subject all proposed regulations to a negotiated rulemaking process. All proposed regulations that the Department publishes must conform to agreements resulting from that process unless the Secretary reopens the process or provides a written explanation to the participants in that process stating why the Secretary has decided to depart from the agreements.

We developed a list of proposed regulatory changes from advice and recommendations submitted by individuals and organizations in response to a May 24, 2001, request for recommendations on improving the Title IV student assistance programs from Representative Howard P. ''Buck''

McKeon and Representative Patsy Mink, the Chairman and Ranking Member, respectively, of the Subcommittee on 21st Century Competitiveness of the Education and the Workforce Committee of the U.S. House of Representatives.

On December 5, 2001, we published a notice in the **Federal Register** (66 FR 63203) announcing our intent to establish two negotiated rulemaking committees to develop proposed regulations. One committee (Committee I) would address issues related to the Title IV student loan programs. The other committee (Committee II) would address all other Title IV student aid issues. The notice requested nominations of individuals for membership on the committees who represented key stakeholder constituencies that are involved in the student financial assistance programs, with preference given to individuals who are actively involved in administering the Federal student financial assistance programs or whose interests are significantly affected by the regulations. In the notice, we identified the constituencies with interests that are significantly affected by the subject matter of the negotiated rulemaking and announced that we expected that representatives of each of those constituencies would likely be selected as members of one, or both, committees. This NPRM is the result of the deliberations of Committee II.

The members of Committee II were:

- Jo'ie Taylor and Ellynne Bannon (alternate) representing students; including the United States Student Association and State PIRGs (Public Interest Research Groups) Higher Education Project;
- Alan White and Elena Ackel (alternate), representing legal assistance organizations that represent students; including Community Legal Services and the National Consumer Law Center;
- Rachael Lohman and Marty Guthrie (alternate), representing financial aid administrators at institutions of higher education; including the National Association of Student Financial Aid Administrators
- Laurie Quarles and Alisa Abadinsky (alternate), representing business officers and bursars at institutions of higher education, and institutional servicers; including the Coalition of Higher Education Assistance Organizations and the National Association of College and University Business Officers;
- Reginald T. Cureton and William ''Buddy'' Blakey (alternate), representing the American Indian Higher Education Consortium, the United Negro College Fund and the National Association for Equal Opportunity in Higher Education;
- Claire M. Roemer and Patricia Hurley (alternate), representing two-year public colleges and universities; including the American Association of Community Colleges;
- Dawn Mosisa and Jo Ann Yoshida (alternate), representing four-year public colleges and universities; including the National Association of System Heads, the American Association of State Colleges and Universities, and the University Continuing Education Association;
- Lydia MacMillan, Ryan Craig Williams (alternate), and Maureen Budetti (2nd alternate), representing private, not-for-profit colleges and universities; including the National Association of Independent Colleges and Universities, and the Association of Jesuit Colleges and Universities;
- Robert Collins and Nancy Broff (alternate), representing for-profit postsecondary institutions; including the American Association of Cosmetology Schools and the Career College Association;
- Charles Cook and Diane Rogers (alternate), representing accrediting agencies; including the Council for Higher Education Accreditation (12-hour rule only);
- Neal Combs and Carl Buck (alternate), representing guaranty agencies and loan servicers; including the National Council of Higher Education Loan Programs (NCHELP), the CEO caucus of NCHELP, and the National Association of Student Loan Administrators;
- Francine Andrea and Wanda Hall (alternate), representing lenders, secondary markets, and loan servicers; including the Consumer Bankers Association, the Education Finance Council, the Student Loan Servicing Alliance, and the National Council of Higher Education Loan Programs;
- Carney McCullough, representing the U.S. Department of Education.

At its first meeting, Committee II reached agreement on its protocols and agenda. During later meetings, the Committee reviewed and discussed drafts of proposed regulations. The Committee met over the course of several months, beginning in January 2002.

In addition to the proposed regulations discussed under the section of this document called SIGNIFICANT PROPOSED REGULATIONS, Committee II discussed other issues related to the administration of the Title IV student assistance programs. Those issues, which are more comprehensively discussed on the 2002 Negotiated Rulemaking Web site for Team Two at: *http://www.ed.gov/offices/OPE/rulemaking/index2002.html*, include the following—

- Use of electronics in the administration of the Title IV programs,
- Use of electronic signatures on timesheets in the FWS Program,
- The fifty percent grant overpayment protection in the Return of Title IV aid regulations,
- ''90–10'' computations,
- Equity in Athletics Disclosure Act (EADA) reporting requirements,
- FWS community service waiver requirements,
- Inclusion of a computer in a student's cost of attendance,
- Regaining student eligibility,
- Overaward tolerances for the Title IV programs,
- Effect of enrollment of certain home-schooled students on institutional eligibility, and
- The fifty percent requirements for telecommunications and correspondence courses in institutional eligibility.

No regulatory proposals are included in this NPRM for these issues either because the committee concluded that the proposed changes could not be made without statutory amendments or because the committee ultimately agreed to remove the item from the agenda and not to pursue a regulatory change at this time. Instead, we decided to address a number of these issues in a non-regulatory way, such as providing clarifying policy language in the Federal Student Financial Aid Handbook.

Tentative agreement was reached by the committee on all but three of the agenda items. The entire committee did not reach consensus on the proposed changes to §§ 668.2, 668.3, 668.4, 668.8, and 690.75, all of which are related to the proposal to replace the 12-hour rule with the one-day rule, because three of the 13 negotiators objected to the change. The committee also did not reach consensus on the proposed changes to § 668.14, which would have modified the section of the program participation agreement that relates to incentive payment restrictions, because two of the 13 negotiators opposed the proposed changes. Finally, the committee reached conceptual agreement on the issue of timely refunds (§ 668.173), but did not review or agree to the actual text of the regulatory language. Detailed discussions of these issues are provided in the body of this document.

The negotiated rulemaking protocols provide that, unless agreed to otherwise, consensus on all of the amendments in

the proposed regulations must be achieved in order for consensus to be reached on the entire NPRM.

Significant Proposed Regulations

We discuss substantive issues under the sections of the proposed regulations to which they pertain. Generally, we do not address proposed regulatory provisions that are technical or otherwise minor in effect.

Branch Campuses (Section 600.8)

Current Regulations: Section 600.8 implements the statutory requirement that a branch campus may request certification as a main campus or as a free-standing institution only after it has been certified by the Secretary for at least two years. However, the regulation does not reflect the statutory distinction that the two-year certification requirement applies only to a branch of a proprietary institution of higher education or of a postsecondary vocational institution.

Suggested Change: We recommended that the regulation clarify that the ''two-year rule'' in § 600.8 applies only to an eligible branch campus of either a proprietary institution of higher education or a postsecondary vocational institution.

Proposed Regulations: The proposed regulation would specifically refer to a branch campus of either an eligible proprietary institution of higher education or an eligible postsecondary vocational institution as the only types of institutions whose branches are covered by the two-year certification requirement.

Reason: Under sections 102(b) and (c) of the HEA, the ''two-year rule'' is applicable only to an eligible branch campus of either a proprietary institution of higher education or a postsecondary vocational institution and is not applicable to an institution of higher education as defined in § 600.4 of the regulations.

However, it should be noted that a single public or non-profit institution can be both an institution of higher education and a postsecondary vocational institution depending upon the programs it offers. In such a case, the ''two year rule'' would apply if the institution wanted a branch campus that offered vocational programs of less than one year to become a free-standing institution.

Change of Ownership (Sections 600.21, 600.31 and 668.174)

Current Regulations: Sections 600.21(f) and 668.174(c)(4) define who is considered a family member for purposes of transfer of institutional ownership and control under the institutional eligibility and financial responsibility regulations.

Section 600.31 provides for the treatment of changes of ownership and establishes that an institution that undergoes a change in ownership resulting in a change of control ceases to qualify as an eligible institution until it establishes that it meets eligibility and certification requirements. Section 600.31(e) provides that a transfer of ownership and control due to the retirement or death of the institution's owner to a member of the owner's family or to an individual with an ownership interest in the institution who has been involved in the management of the institution for two years prior to the transfer is not considered a change of ownership and control for purposes of institutional eligibility.

Suggested Change: A group of institutions suggested that the definition of ''family member'' in the regulations be expanded to include other persons in the owner's family including people who become part of the owner's family as a result of remarriage. They also suggested broadening the list of transactions that are not considered changes in ownership to include situations where an owner who was retiring from operating an institution and transferring ownership to another family member would still perform some duties at the institution.

Proposed Regulations: The proposed changes to §§ 600.21(f) and 668.174(c)(4) would expand the definition of a member of the family to include grandchildren, a spouse's children and grandchildren, and family members as a result of remarriage.

The proposed change to § 600.31(e) would expand the conditions under which transfers of ownership and control to family members are not considered a change of ownership for institutional eligibility purposes. We are proposing to expand the current exception in the regulations to allow an owner to transfer his or her interest in an institution to a member of his or her family, provided that the ownership transfer is reported to the Department under § 600.21(a)(6). The proposed regulations would clarify that the excluded transfer would be only to persons that have held an ownership interest and a management role at the institution for at least two years.

Finally, the proposed regulations would also clarify that the entity covered by the change of ownership requirements and that signs the Program Participation Agreement (PPA) may be the institution signing as a corporation or as a sole proprietorship, the institution's parent corporation, or other entity such as a partnership. The excluded transfer would apply to the owner's equity interest or partnership interest in that entity.

Reason: We agree that the scope of family members in the current exemption for transfers within a family is too narrowly defined, and also agree that the current restriction that transfers of ownership and control of an institution within a family may only be excluded from the change of ownership regulations when made in connection with the death or retirement of the owner is overly restrictive. The proposed regulations would require that the transfer to an owner's family member be reported under § 600.21. The reporting of that transfer is required to keep our records up-to-date.

Definition of Academic Year—''12-Hour Rule'' (Sections 668.2, 668.3, and 668.8)

Current Regulations: The definition of an academic year appears in § 668.2. Section 481(a)(2) of the HEA provides that an academic year, for Title IV, HEA student financial assistance purposes, must contain at least 30 weeks of instructional time. For undergraduate programs, the law requires that over the 30 weeks of instructional time a full-time undergraduate student must be expected to complete at least 24 semester or trimester hours, 36 quarter hours, or 900 clock hours. Section 481(b) of the HEA sets forth minimum lengths of time for certain eligible programs in terms of weeks of instructional time.

Section 668.2 currently defines a week of instructional time for educational programs that measure academic progress using credit hours and standard terms (semesters, trimesters, or quarters) or clock hours, as any week in which one day of regularly scheduled instruction, examination, or preparation for examination is offered—the one-day rule. For educational programs that measure academic progress using credit hours and are either nonterm or nonstandard term programs, the regulations define a week of instructional time as any week in which at least 12 hours of instruction, examination, or preparation for examination is offered. This regulatory requirement for programs using credit hours in non-standard terms or without terms is commonly referred to as ''the 12-hour rule''.

Eligible program requirements are codified in § 668.8 and include the same definitions of a week of instructional

time as used in the academic year definition discussed above.

Suggested Change: A large number of institutions and groups, including the bipartisan Web-based Education Commission chartered by the Higher Education Amendments of 1998, suggested that the 12-hour rule be eliminated. Many suggested that the one-day rule be adopted as the definition of a week of instructional time for all types of educational programs, not just those measuring academic progress using standard terms or clock hours.

Proposed Regulation: These proposed regulations would eliminate the 12-hour rule for nonstandard and nonterm educational programs that measure progress in credit hours, and adopt a single regulatory standard for all types of educational programs.

Under the proposed regulation, the current definition that has applied for several years to credit hour, standard term programs would also apply to credit hour nonstandard term and credit hour nonterm programs. Under this longstanding definition, a week of instructional time is a week in which there is at least one day of regularly scheduled instruction or examinations, or after the last day of classes, at least one day of study in preparation for final examinations. Similar changes would be made to § 668.8—Eligible program.

Finally, the proposed regulation would move the definition of academic year from § 668.2, and place the revised definition in a new § 668.3.

Reason: Many institutions are now offering programs in shorter time periods which may also have overlapping terms and rolling starting dates. For many of the new nonstandard or nonterm educational programs, compliance with the 12-hour rule has become increasingly difficult and at odds with the educational advantages such flexible program formats provide for students, especially non-traditional students. The 12-hour rule also results in significant disparities in the amount of Title IV, HEA funding that students receive for the same amount of academic credit, based solely on whether the program that they are enrolled in uses standard academic terms or not.

We, and most of the negotiators, are concerned that a number of the statutory and regulatory provisions that govern the Title IV student assistance programs, including the 12-hour rule, are stifling innovation and creating inequities in the amount of Federal student financial assistance that students receive. During negotiated rulemaking, the proposal to eliminate the 12-hour rule was discussed at length. Nearly all of the negotiators were supportive of the elimination of the 12-hour rule and the adoption of the one-day rule as the definition of a week of instructional time for all types of educational programs.

One negotiator, while recognizing the need for change in this area, felt that we should wait until the reauthorization of the HEA and then address, in a more comprehensive manner, all issues related to providing student financial assistance to students enrolled in nontraditional educational programs. Every negotiator, including those who voiced opposition to the elimination of the 12-hour rule, agreed that the current rule was problematic, limited educational opportunities, and needed to be changed. However, those negotiators who voiced opposition did not propose any alternatives to the one-day rule.

While nearly all of the negotiators agreed with the proposal to replace the 12-hour rule with the one-day rule, the committee was unable to reach complete consensus on the proposal. However, we agree with the vast majority of the negotiators and the constituents whose interests they represent that the 12-hour rule is an unnecessary barrier to flexible and innovative educational programs, and that a week of instructional time should be defined in the same way for all educational programs. We have not experienced any problem with the one-day rule as it has been applied to standard term-based and clock hour programs and believe that it is the appropriate measure to adopt for all programs. In addition, we believe that the clock hour/credit hour conversion regulations (34 CFR 668.8(k) and (l)), provide adequate safeguards. Moreover, the proposed changes to the definition of payment periods provide additional assurance that Title IV program funds will be properly disbursed.

Finally, we note that accrediting agencies are aware of these new educational program formats, and have taken steps to ensure the quality of education offered in these new formats.

Payment Periods (Sections 668.4, 682.603, 685.301, and 690.75)

Current Regulations: Current regulations provide a definition of a payment period for the Title IV student financial assistance programs. In general, the amount of a student's Title IV award and the frequency and timing of its disbursement are determined on a payment period basis (with special rules for disbursements of FFEL and Direct Loans). The regulations provide a separate payment period definition for each of the three types of academic programs: (a) Programs that measure progress in credit hours and have academic terms, (b) programs that measure progress in credit hours and do not have academic terms, and (c) programs that measure progress in clock hours.

In all three types of programs, the main point of having payment periods is to ensure that a student's award is paid in approximately equal increments over the course of the student's program of study, with those payments usually being made at least twice during an academic year. The current regulations do not specifically address how to determine the beginning and end of a payment period when a student who was paid for a payment period withdraws before completing that payment period and returns to the same institution or transfers to another institution. The ambiguity on how the regulations are to be applied in such instances may have resulted in an uneven application of the regulations for these students.

Suggested Change: With the proposed replacement of the 12-hour rule with the one-day rule for determining when an institution is considered to have provided a week of instructional time, we suggested that there should be additional disbursement safeguards for credit hour programs without terms.

Specifically, we suggested that the definition of a payment period for credit hour programs without terms require that, in addition to completing one-half of the academic coursework of the period (e.g., academic year, program, or remainder of the program), the student complete one-half of the required weeks of instruction in that period.

Additionally, for the past several years institutions that offer programs in clock hours and credit hours without terms requested that we clarify how to determine the beginning and end of a payment period when a student who was paid for a payment period withdraws before completing that payment period and returns to the same institution or transfers to another institution.

Proposed Regulations: The proposed regulations would amend the definition of a payment period in § 668.4(b) to require a student to complete the requisite number (usually half) of weeks in that academic year or program, in addition to the clock hours or credit hours.

The proposed regulations would also clarify the definition of a payment period to specifically address the situation when a student withdraws

from a clock hour program or a credit hour nonterm program during a payment period, but then returns to school. The proposed regulations provide that, if the student returns to the same program at the same institution within 180 days of the original withdrawal, the student is considered to be in the same payment period he or she was in at the time of the withdrawal. Such a student would retain his or her original eligibility for that payment period. Once the student completes the payment period for which he or she had been paid, he or she becomes eligible for a subsequent Title IV student aid payment.

Additionally, under the proposed regulations, a student who withdraws from a program during a payment period and then returns to that program after 180 days, or transfers, within any time frame, into another program either at the same institution or at another institution would start new payment periods. The institution would calculate these new payment periods using the regular rules in the appropriate part of the definition of a payment period, except that it would consider the length of the program to be equal to the remainder of the program that the student has to complete upon return to the original program or transfer to another one. However, if the remainder of a student's program is one-half of an academic year or less, that remaining period would constitute one payment period.

Reason: We believe that an additional safeguard is needed to prevent institutions from structuring educational programs in such a way as to allow the second payment of Title IV aid for an academic year to be made before half of the academic year (as measured in weeks) actually occurs. This could happen, for example, if a 24 credit hour, nonterm program was offered over a 30 week period, but was structured so that the first 12 credits were earned in the first 10 weeks, with the remaining 12 credits being earned in the last 20 weeks. Under the current payment period definition, an institution would be able to pay a student the second half of a Pell Grant long before the half-way point of the academic year, which under the HEA must be a minimum of 30 weeks long.

Because of this concern, we are proposing to modify the payment period definition for credit hour programs without terms to require that a payment period cover half of the number of weeks of an academic year (or of a program), in addition to covering half the number of credits earned in that period. For example, in the situation discussed above if a student completes the first 12 credits in 10 weeks, the first payment period would not be considered to be completed and the second disbursement could not be made until 15 weeks of instructional time had elapsed in addition to the completion of 12 credit hours.

This addition of ''half of the number of weeks'' in the academic year (or in the program) to the payment period definition is not necessary for term-based, credit hour programs or for clock hour programs. Standard academic terms currently result in payment periods of relatively equal length. Likewise, in clock hour programs, the student's payment periods are based on the completion of actual hours of instruction completed by the student, and not on the scheduled hours offered in the program.

We have proposed two other changes to the definition of a payment period for clock hour programs and for credit hour programs without terms to address situations in which a student withdraws from a program before the completion of the payment period for which he or she was paid and then either returns to the same institution or transfers to another institution.

When a student withdraws from a program during a payment period and returns to the same program at the same institution within 180 days, the student is considered to be in the same payment period he or she was in at the time of the withdrawal. This proposed change is similar to a leave of absence, and the proposed regulation is consistent with the current regulations for students who are granted leaves of absence. The 180-day measure is consistent with the maximum 180 days allowed for an approved leave of absence in the Return of Title IV Aid regulations. The difference, of course, is that with an unauthorized leave of absence the institution would not know that the student would be returning and would have treated the student as a withdrawal. Based upon that withdrawal, the institution would have completed the Return of Title IV Aid calculation, which may have required it and the student to return funds to the Title IV programs. If the student returns within 180 days to his or her original program, the student would have to complete the remaining clock or credit hours before starting a new payment period and receiving Title IV aid for that new payment period. However, the institution would re-disburse any funds that it had previously returned to the Title IV, HEA programs, including any overpayment it had collected from the student as a result of the earlier withdrawal.

If a student withdraws during a payment period and either returns to the same program at the same institution after 180 days, or transfers into another program, we believe that treating the student as if he or she was still in the same payment period would be cumbersome for institutions to administer and for students to understand. Therefore, we have proposed that for such a student the institution start a new series of payment periods.

We believe that it is reasonable to differentiate between situations in which, on the one hand, the student returns to the same program at the same institution within a short period of time (180 days), and, on the other hand, the student either returns to the same program after a longer period of time or transfers into another program (either at the same institution or at another). Because of the continuity in the student's attendance and similarity to a leave of absence in the first situation, we believe it appropriate, and administratively convenient to keep such a student in the same payment period upon his or her return to school. Conversely, because continuity is not present in situations in which a considerable time period (more that 180 days) has passed, or in which the student transfers into a new program, we believe it appropriate to start that student over in terms of the calculation of his or her payment periods.

Program Participation Agreement (Section 668.14)

Current Regulations: Section 668.14(b)(22) of the current regulations implements the statutory restrictions on incentive payments for success in securing enrollment or financial aid. Section 487(a)(20) of the HEA provides that, as part of its program participation agreement, an institution will not provide any commission, bonus, or other incentive payment based directly or indirectly on success in securing enrollments or financial aid. The only significant addition to the statutory requirements in the current regulations is a provision that exempts from the incentive payment restrictions token gifts of less than $25.

Suggested Change: Many higher education institutions have made a number of recommendations regarding activities that should be specifically exempt from the current restrictions on incentive payments. These restrictions and our interpretation of the statutory requirements were identified by the Web-based Education Commission as a

barrier to students enrolling in distance education and on-line courses.

Institutions and many others requested that the regulations be amended to explicitly identify certain types of payments and compensation plans that do not violate the current statutory restrictions. Another more specific suggestion from institutions and the Web-Based Education Commission was that the regulations should clearly permit an institution to contract with an outside entity that offers enrollment and information services through the World Wide Web and allow the institution to pay for those services based on the number of prospective students visiting the site who ultimately apply to, or enroll at, the institution. Such services are currently not considered to be a violation if they are done through an institution's own Web site.

Another suggestion was that the regulations clarify that the incentive payment restrictions do not extend to revenue-sharing agreements between institutions and third-party service providers as long as the third-party servicers have no decision-making authority for admissions decisions or financial aid awards.

Proposed Regulations: The proposed regulations begin, in § 668.14(b)(22)(i), by re-stating the statutory prohibition against incentive payments.

Paragraph (b)(22)(ii) of the proposed regulations lists 12 types of activities and payment arrangements that an institution may carry out without violating the incentive payment restrictions provision. We believe that these ''safe harbors'' will allow institutions to maintain payment and compensation plans that are in compliance with the HEA and the regulations.

The list of ''safe harbor'' activities is derived from compensation and payment plans that the majority of the negotiators agreed should be included. They provide institutions with specific, concrete examples of payments they can make that do not violate the statutory provision. We have not, however, included in the regulations a complementary listing of payment or compensation plans that are impermissible.

The specific types of payments or compensation plans included in the listing in paragraph (b)(22)(ii) cover the following subjects, which are further discussed below:

- Adjustments to employee compensation
- Enrollments in programs that are not eligible for Title IV, HEA assistance
- Contracts with employers
- Profit-sharing or bonus payments
- Compensation based upon completion of program
- Pre-enrollment activities
- Managerial and supervisory employees
- Token gifts
- Profit distributions
- Internet-based activities
- Payments to third parties for non-recruitment activities
- Payments to third parties for recruitment activities

Reason: As indicated above, section 487(a)(20) of the HEA prohibits an institution that participates in programs authorized under Title IV of the HEA from providing any commission, bonus, or other incentive payment based directly or indirectly on success in securing enrollments or financial aid. This provision was enacted as part of the Higher Education Amendments of 1992. While the statutory language noting ''directly or indirectly'' is broad, the conference committee report on the legislation included the following statement to clarify the legislative intent and limits of these restrictions:

''The conferees wish to clarify, however, that the use of the term 'indirectly' does not imply that institutions cannot base employee salaries on merit. It does imply that such compensation cannot solely be a function of the number of students recruited, admitted, enrolled, or awarded financial aid.''

Consistent with this clarification of legislative intent, the proposed regulations are based on a purposive reading of section 487(a)(20) of the HEA.

The list of specifically permitted activities provides a reasonable and workable framework that institutions can use to determine if a payment is a violation of the incentive payment restrictions. Most non-Federal negotiators were supportive of this type of regulatory structure.

What follows is a brief discussion of each of the payment types included in the proposed regulations.

A. Adjustments to Employee Compensation

The inclusion of compensation adjustments under this provision of the proposed regulations recognizes the balance between the need of an institution to base its employees' salaries or wages on merit, and concern that such adjustments do not make the statutory prohibition against the payment of commissions, bonuses and other incentive payments meaningless.

During the deliberations some of the non-Federal negotiators stated that institutions commonly adjust a new employee's salary after a probationary period and then again after the employee completes the first year. In light of this common business practice and using the conference report language as a guide, we believe, as did a majority of the negotiators, that two salary adjustments within a twelve month period is the appropriate balance. As a result, the proposed regulations provide that an institution that makes up to two adjustments (upward or downward) to a covered employee's (one who is involved in recruitment, admissions, enrollment, or financial aid activities) annual salary or fixed hourly wage rate within any twelve month period is not in violation of the restrictions on incentive payments. However, consistent with the conference language the basis for any adjustment may not be solely the number of students recruited, admitted, enrolled, or awarded financial aid.

The proposed regulations also provide that one upward adjustment resulting from a cost of living increase within a twelve month period that is paid to all or substantially all of the institution's employees will not be considered an ''adjustment'' for the purpose of this regulation.

We believe the proposed regulations for compensation adjustments address the concern that such adjustments are not formulated in a way that circumvents the statutory prohibition against incentive payments.

B. Enrollments in Programs That Are Not Eligible for Title IV, HEA Assistance

The program participation agreement established under section 487 of the HEA applies only to programs eligible for Title IV HEA program assistance. Therefore, the proposed regulations do not consider payments to recruiters and others based upon the enrollment of students in programs that are not eligible for Title IV funding to be a violation of the incentive payment restrictions.

C. Contracts With Employers

Many institutions suggested that the development of contractual agreements for training or instruction between an institution and an employer is another area where the incentive payment restrictions should not be applied. They argued that the restrictions on incentive payments should not apply in situations where an individual is paid for successfully obtaining a contract for the institution to provide education and training to a business's employees. We agree that as long as there is no direct contact by the institution's representative with students and because the employer is paying a

significant portion (at least 50 percent) of the training costs, such activities are not considered to be ''recruitment'' or the ''securing of enrollments'' under the provisions of section 487(a)(20) of the HEA. Therefore, the proposed regulations provide that incentive payments may be paid to individuals for arranging contracts under which the institution provides education and training to employees provided that the employer pays 50 percent or more of the tuition and fees charged for the training and the payments provided to the individual are not based upon either the number of employees who enroll or on the amount of revenue generated by those employees. The employer may pay the tuition and fees either directly to the institution or by reimbursement to the employee. The institution's representative may not have any contact with the employees.

During the discussion on this issue in the negotiated rulemaking committee much attention was given to how much, if any, of the institutional charges should be paid by the employer for the institution not be in violation of the incentive payment restrictions. Some negotiators suggested that the amount or percentage paid by the employer was irrelevant. Others thought that the payment by the employer of a significant portion of the costs of the training was critical in determining whether the program was a contract training program with the employer rather than simply enrollment of individual employees. They also argued that to the extent the employer pays a significant share of the tuition and fees of the employees' education and training, there would be less likelihood that unqualified students would be enrolled.

D. Profit-Sharing or Bonus Payments

Generally, profit-sharing and bonus payments are not payments based on success in securing enrollments or awarding financial aid unless they are made only to employees who are involved in recruitment, admissions, enrollment, or financial aid. Therefore, the proposed regulations provide that such payments made by an institution are not prohibited as long as those payments are made to all or substantially all of the institution's full-time professional and administrative employees and are substantially the same amount or are based upon the same percentage of salary. During the discussion on this issue several negotiators asked that such payments also be in compliance even if they were not made to all of an institution's employees but to only those at the same organizational level. We agreed with this proposal after restating that such an organizational level could not consist predominantly of recruiters, admissions staff, or financial aid staff.

E. Compensation Based Upon Completion of Program

Completion of an academic program is not ''enrollment'' under the provisions of section 487(a)(20) of the HEA. We believe that one of the reasons for the prohibition against incentive payments for success in recruitment, admissions, enrollment, or securing financial aid, is to prevent institutions from enrolling students into a program without regard to their qualifications or likelihood of completing the program. Most of the negotiators believed that the completion of the program or, in the case of students enrolled in a program longer than one academic year, the completion of the first academic year is a reliable indicator that the student was qualified for the program. Therefore, the proposed regulations allow payments made to an institution's employees based upon students' successful completion of their educational program, or one academic year for a longer program, not to be a violation of the incentive payment restrictions.

F. Pre-Enrollment Activities

Generally, pre-enrollment activities are not considered recruitment. The proposed regulations recognize the ancillary nature of various supportive activities that, while part of the overall recruitment or financial aid process, are somewhat removed from the actual recruitment and admissions of students or the awarding of financial aid. Therefore, individuals whose responsibilities are limited to ''pre-enrollment'' activities that are clerical in nature are outside the scope of the incentive payment restrictions. It is not a violation of the incentive payment restrictions for employees engaged in pre-enrollment activities to be compensated based upon such pre-enrollment activities as long as the number of people who actually enroll is not a factor in determining the compensation. However, soliciting students for interviews is recruitment and not a pre-enrollment activity.

G. Managerial and Supervisory Employees

We believe the incentive payment restrictions apply only to those individuals who perform activities related to recruitment, admissions, enrollment, or the financial aid awarding process and their immediate supervisors. We believe that direct supervisors should be covered because their actions generally have a direct, immediate, and dramatic impact on the individuals who carry out these covered activities. The incentive payment restrictions do not extend to supervisors who do not directly manage or supervise employees who are directly involved in those activities. They also do not apply when an employee, manager or otherwise, occasionally has direct contact with a prospective student. For example, there would be no problem if the president of an institution, who was compensated at least partially on the profitability of the institution, happened, on a very occasional basis, to offer a tour of the institution to a prospective student.

H. Token Gifts

The negotiators indicated support for an increase of the current $25 limit that is allowable for a single gift to a student or an alumnus of the institution. We realize that the cost of a token gift has risen since the inception of the current regulation and therefore propose to increase the maximum cost of a token, non-cash gift that may be provided to an alumnus or student to not more than $100. Moreover, the proposed regulations would also expand the limitation of a single gift provided to a student or alumnus by the institution, to not more than one gift annually.

The cost basis of a token non-cash gift is what the institution paid for it. The value is the fair market value of the item. Some of the negotiators wanted to use ''value'' rather than ''cost'' because they were concerned that an outside source would donate something of great value to an institution, and the institution would give it to a student or alumnus as an incentive to recruit students. One negotiator argued that if a car were donated to the institution, the cost to the institution would be zero, and therefore permitted to be a token gift under the proposed regulations. In addition to pointing out the unlikelihood of that scenario, we noted that the proposed (and current) regulations specifically use the term ''token gift'' and anything of great value, such as a car, would certainly not be considered ''token'' as that term is reasonably understood to mean.

I. Profit Distributions

Profit distributions to owners are not payments based on success in securing enrollments or awarding financial aid. Therefore, the proposed regulations specifically acknowledge that any owner, whether an employee or not, is entitled to a share of the organization's profits. However, any profit

distributions under this paragraph are permitted only to the extent they represent a proportionate distribution based upon the employee's ownership interest.

J. Internet-Based Activities

Institutions have indicated their need to utilize and expand the most accessible and cost-effective means possible for recruitment and admission activities. The report of the Web-based Education Commission found that, ''Although not the original intent, the language [of the incentive payment restriction] effectively bars higher education institutions that participate in Title IV from using third-party Web portals to provide prospective students with access to information about many institutions or provide the same services as institutions offer on their own Web sites * * *''. The Commission suggested that the regulations permit an institution to contract, without violating the incentive payment restrictions, with an outside entity that offers services through the World Wide Web.

Moreover, we believe that for purposes of these regulations, the Internet is simply a communications medium, much like the U.S. mail, and direct mail solicitations and advertisements have generally not been considered within the scope of the incentive payment restrictions. Therefore, the proposed regulations do not preclude an institution from compensating a service provider for Internet-based recruitment and admission services.

K. Payments to Third Parties for Non-Recruitment Activities

Section 487(a)(20) applies only to recruiting, admissions, enrollment, or financial aid. Therefore, these proposed regulations would not consider payments to third parties for services to the institution other than recruiting, admissions, enrollment, or financial aid services, to be in violation of the incentive payment restrictions. Under such arrangements, the third party might provide services such as instruction, curricula, and course materials. This provision would clearly establish that payments to third parties, including tuition sharing arrangements, that are not for recruitment, admissions, enrollment, or financial aid services, would not be in violation of the incentive payment restrictions.

L. Payments to Third Parties for Recruitment Activities

Section 487(a)(20) applies both to individuals who work for the institution and to entities outside the institution. We believe that Congress included these outside entities because it did not want an institution to avoid the limitations in that section merely by using an outside entity. On the other hand, we believe that Congress did not intend to limit an institution's ability to contract with outside entities for recruitment, admissions, enrollment, or financial aid services if the outside entity adheres to the same limitations that apply to institutions. Payments made by an institution to a third party would not violate the incentive payment restrictions as long as the individuals performing any activities related to recruitment, admissions, enrollment, or financial aid were compensated in a way that would otherwise be permissible under the standards in this section for covered employees of the institution.

At the conclusion of the discussion on the issue of incentive payment restrictions, all the negotiators agreed that clarification was needed in the area of the incentive payment restrictions and that the issuance of specific guidance in the regulations was preferable to our earlier use of private letter guidance in response to individual inquiries. However, because universal agreement could not be reached on some of the specific proposals presented, the committee was not able to reach consensus on the proposed regulatory language related to the incentive payment restrictions.

Institutions Required to Take Attendance (Section 668.22)

Current Regulations: Section 668.22(b)(3) defines, for purposes of the Return of Title IV Aid calculations, an institution that is ''required to take attendance'' as one that is required to take attendance by an entity outside of the institution, such as the institution's accrediting agency or a State agency.

Suggested Change: Some institutions and the non-Federal negotiators suggested that we provide greater specificity in the definition of when an institution is considered to be one that is required to take attendance. In particular, they wanted the regulations to clearly state that an institution is one that is ''required to take attendance'' only if the outside entity has determined that it requires the institution to take attendance.

Proposed Regulations: Under the proposed regulations in § 668.22(b)(3)(i), for the purposes of determining the withdrawal date of a student, an institution would be considered to be one that is ''required to take attendance'' only when an outside entity determines that it requires that the institution take attendance for some or all of its students. Absent a determination by an outside entity that the institution is required to take attendance, the institution would be considered to be one that is not required to take attendance.

Reason: Several of the negotiators expressed concern with our current interpretation of the definition of an institution that is required to take attendance. We have previously stated that if we determine that the only way that an institution can comply with a requirement of an outside entity is to take attendance, the institution is considered to be ''required to take attendance'' even if the outside entity states that it does not require the institution to take attendance (Dear Colleague Letter GEN–00–24).

Several of the negotiators felt that we should defer to the outside entity to determine when requirements of that entity mean that an institution is required to take attendance. The negotiators believed that the outside entity was in the better position to make that determination, not the Department.

The committee agreed to modify the regulations to make clear that an institution is considered to be ''required to take attendance'' only when an outside entity has determined that the institution must, even for a limited period of time, take attendance for some or all of its students.

Institutions should note that we have not changed the existing regulatory requirement in § 668.22(b)(3)(ii), which provides that if an outside entity specifically requires an institution to take attendance for only a portion of its students, the institution is required to use the attendance records for those students only. The institution would not be required to take attendance for any of its other students unless it is required to take attendance for those students by another entity.

If an outside entity has a requirement, as determined by that entity, for the institution to consistently take attendance for a limited period of time (e.g., up to a census date), the institution meets the definition of an institution required to take attendance for that limited period of time only. If a student ceased enrollment during that limited period, the institution must use its attendance records to determine the student's withdrawal date. However, if an outside entity has a requirement, as determined by the entity, to take attendance for a single day such as attendance for census purposes, that single event would not cause the institution to meet the definition of an

institution that is required to take attendance.

Also, as we have previously indicated, when an institution administratively withdraws a student from all of his or her classes the student is considered to have officially withdrawn as of the date of that administrative withdrawal. This guidance applies regardless of whether or not the institution is required to take attendance.

Consistent with that guidance, when, through a census on a certain date or similar process, all of a student's instructors indicate that the student is no longer in attendance, the student is considered to have officially withdrawn as of the census date.

Leaves of Absence (Section 668.22)

Current Regulations: Section 668.22(d)(1)(vi) of the Return of Title IV Aid regulations provides that generally, only one leave of absence that meets certain requirements and does not exceed 180 days in a 12-month period may be granted to a student. However, additional leaves of absence may be granted under exceptions provided in § 668.22(d)(2). One of those exceptions allows an institution to grant an additional leave of absence if the subsequent leave of absence does not exceed 30 days and it is due to unforeseen circumstances. Additionally, other leaves of absence may be granted if the institution documents that the leaves are for jury duty, military reasons, or circumstances covered under the Family and Medical Leave Act of 1993.

Current regulations also provide that a leave of absence for Return of Title IV Aid purposes must have been granted by the institution under its formal leave of absence policy. An institution's leave of absence policy is a formal policy if it is in writing and publicized to students, and it requires students to provide a written request for a leave of absence.

Suggested Change: Some institutions and the non-Federal negotiators recommended that the protection provided by the 180-day maximum timeframe within a 12-month period for an approved leave of absence is sufficient to prevent abuse and that tracking the reasons for requests for subsequent leaves and evaluating them against certain limited exceptions is administratively burdensome. They stated that institutions should have broad flexibility to make the best determination for each student based upon his or her unique needs and situation rather than being limited by the number and type of leaves of absence that they can approve.

Proposed Regulations: The proposed regulations would simplify the approved leave of absence definition by allowing multiple leaves of absence at the discretion of the institution, as long as the total number of days for all leaves does not exceed 180 days within a 12-month period. As a result, we propose to remove the current language that describes the exceptions to the single leave of absence rule.

The requirement that an institution's leave of absence policy require a student to submit a written request would be modified to require that the request must include a reason.

Reason: Some of the non-Federal negotiators indicated that the range of reasons that cause students to need multiple leaves of absence can be outside the scope of the current regulations, but nonetheless important for the students and their families. Also, the restriction in the current regulations that the first subsequent leave of absence, although it may be granted for any unforeseen circumstance, be limited to no more than 30 days, is arbitrary in practice and results in unfair treatment, while not providing any additional protection for either the student or the programs. For example, if a student had taken a leave of absence for 61 days and subsequently needed an additional leave of absence of 31 days for unforeseen circumstances, under the current regulations the second leave could not be an approved leave of absence. The total of 92 days for leaves of absence is significantly less than the maximum of 180 days allowable, but because the second leave of absence for unforeseen circumstances is for more than 30 days, it cannot meet the current definition in § 668.22(d)(2)(i).

We agree that if there is a reasonable expectation that a student will return from a leave of absence, it is better to keep the student enrolled than to have the student withdraw.

The current regulations already provide that an institution must determine, before it grants a leave of absence, that there is a reasonable expectation that the student will return from the leave. In order for the institution to make such a determination, it must know the student's reason for requesting the leave. For this reason, the proposed language would require the institution's formal leave of absence policy to include the requirement that the student provide the reason for the requested leave of absence.

We have been asked to clarify the requirements that an institution must comply with when students return from a leave of absence but, instead of resuming their academic program at the point they began the leave of absence, they repeat prior coursework in preparation for continuing in the original program of study.

One element of an approved leave of absence is that the institution may not impose additional charges when the approved leave of absence ends and the student resumes his or her program of study. The same requirement holds when a student returns for the purpose of repeating prior coursework to enhance his or her skills and knowledge in order to resume the program. That is, a student may return and repeat prior coursework as long as the student does not incur additional institutional charges. As a result, the student would also not be eligible for any additional Title IV program assistance for this preparatory phase, even if the student were to start again at the beginning of the module or course from which he or she took the leave of absence.

Until a student described above has resumed the academic program at the point he or she began the leave of absence, the student is considered to still be on the approved leave of absence, including during the time the prior coursework is being repeated. Since such a student is considered to be on a leave of absence while repeating prior coursework, if the student fails to begin attendance at the point in the academic program where he or she left off at the beginning of the leave of absence, the regulatory requirement that a student who fails to return from an approved leave of absence must be treated as a withdrawal back to the start of the leave of absence applies. The date of the student's withdrawal that must be used in the Return of Title IV Aid calculation is the date that he or she began the leave of absence and not the date the student ceased participation in the repeated courses.

Overpayments (Sections 668.35, 673.5, and 690.79)

Current Regulations: Section 668.35(c) provides that a student who receives a Federal Perkins loan or Title IV grant overpayment of any amount is eligible to receive further Title IV aid only if the student repays the overpayment in full or makes arrangements, satisfactory to the holder of the debt, to repay the overpayment.

Sections 673.5(f) and 690.79 establish student and institutional liability for Perkins loan, FSEOG, and Federal Pell Grant overpayments and specify the repayment and collection of such, as well as the conditions for the referral of

FSEOG and Pell Grant overpayments to the Secretary.

For all three programs, the regulations provide that the student is liable for any overpayment made to the student regardless of the amount. They also provide that the institution is liable for any overpayment that was the result of its failure to comply with the appropriate regulatory requirements. In addition, the regulations provide that, for any overpayment for which it is not liable, the institution must assist the Secretary in recovering that overpayment.

For Perkins and FSEOG overpayments only, the regulations also provide that the institution must promptly send the student a written notice requesting repayment of the overpayment. In contrast, however, the regulations for the Pell Grant program require the institution to make a reasonable effort to contact the student and recover the overpayment.

Also, the Perkins and FSEOG regulations require the institution to consider any objection made by the student that the overpayment determination is erroneous and to determine whether the objection is warranted. The Pell Grant regulations do not specify this step.

For the Perkins program, the institution is responsible for attempting to collect any overpayment and cannot refer the overpayment to the Secretary. Any amount collected must be returned to the institution's Federal Perkins Loan fund. If an FSEOG overpayment is not resolved, the institution must refer it to the Secretary if it is $25 or more. An unresolved Pell Grant overpayment must also be referred to the Secretary, but the regulations are silent on a minimum amount.

Suggested Change: At various conferences and meetings, institutions have suggested that the regulations on the treatment of overpayments be applied consistently to all of the Title IV programs. Further, they suggested that the treatment of overpayments incorporate the de minimis amount concept that currently applies to a grant overpayment under the Return of Title IV Aid requirements. That is, they suggested that a student not lose eligibility for Title IV funds nor be required to repay an overpayment if the original overpayment amount is less than $25. This request was repeated by some of the non-Federal negotiators.

Proposed Regulations: The proposed regulations would revise § 668.35(c) to allow a student to remain eligible to receive additional Title IV aid if the amount of the Perkins Loan or Title IV grant overpayment is less than $25 and is neither a remaining balance nor a result of applying the overaward threshold for the campus-based programs allowed under § 673.5(d).

The proposed regulations would revise §§ 673.5(f) and 690.79 to specify that a student is not liable for a Perkins loan, FSEOG, or Pell Grant overpayment that is less than $25 and is not a remaining balance and, for a Perkins loan or FSEOG overpayment, is not the result of applying the $300 campus-based overaward threshold. The proposed regulations also would specify, for all three programs, that a student is not liable for an overpayment if the institution is liable for it.

The proposed regulations would provide that for purposes of FSEOG overpayments, the provisions apply only to the Federal share of FSEOG awards if the institution meets its matching share by the individual recipient method or the aggregate method. When an FSEOG award is matched under the fund specific method, the entire amount of the award would be subject to the provisions of § 673.5(f).

The proposed regulations would make the collection and referral requirements for a Pell Grant overpayment consistent with current requirements for FSEOG overpayments. They would specify that when attempting to collect a Federal Pell Grant overpayment, the institution must provide written notice of the overpayment to the student, and if a student objects to an overpayment determination on the grounds that it is erroneous, the institution must determine whether the objection is warranted.

For student overpayments that meet the conditions of the proposed de minimis standard, an institution would not be required to attempt recovery of the overpayment, report it to NSLDS, or refer it to the Secretary.

Reason: Institutions have questioned the complexity created by making students ineligible for further Title IV funding due to small overpayments and the cost effectiveness of collecting such small amounts. They thought that the current grant overpayment policies under the Return of Title IV Aid requirements allowed more flexibility and should be adopted for other types of overpayments. They further noted an inconsistency in the treatment of different types of overpayments. The negotiators agreed with the reasons provided by the institutions. The regulatory changes of applying a $25 de minimis standard to other overpayments are proposed for consistency, simplicity, and cost effectiveness.

It is important to note that for all programs the de minimis $25 amount must not be the result of a remaining balance. A remaining balance less than $25 occurs when the overpayment amount for which the student was responsible was originally $25 or more, but is now less than $25 because of payments made. In such cases, even though the balance of the overpayment now owed is less than $25, the de minimis standard would not apply, and the student would still be responsible for fully repaying that remaining balance. The student would also not be eligible for additional Title IV aid until the overpayment is fully paid or satisfactory arrangements to repay are made.

Federal Perkins Loan and FSEOG overpayments that result from the application of the $300 campus-based overaward threshold also would not be subject to the de minimis standard. For example, if an institution discovers that a student with campus-based funds subsequently received additional sources of aid such that the student is now overawarded by $314, the student would have a campus-based overpayment of $14 after the $300 overaward threshold is applied. In this instance, the student would still be responsible for the $14 overpayment and would not be eligible for additional Title IV student aid until the overpayment is resolved.

In order to provide consistent treatment among the programs, the proposed change to the Pell Grant regulations would provide that an institution must promptly send a written notice to the student requesting repayment of an overpayment. (Note that unless specifically indicated otherwise, any written notice requirement can be delivered by electronic means, as well as via paper methods.)

To provide students with the opportunity to object to any overpayment determination that they believe is in error, we are proposing the same requirement for the Pell Grant program that currently exists for the Perkins and FSEOG programs. That is, institutions would be required to allow students to object to a Pell Grant overpayment determination on the grounds that it is erroneous. The institution would be required to consider any information provided by the student and determine whether the objection is warranted.

The proposed regulations would not modify the responsibilities of an institution when it is liable for an overpayment. If the institution is liable for an overpayment of any amount, it

must immediately return the amount of the overpayment to the appropriate Title IV student aid account or otherwise return the funds to the Secretary as appropriate. These regulations would not prevent an institution from billing or otherwise holding the student responsible for the amount of the overpayment that the institution returned. However, such a debt is, by definition, not a Title IV debt and cannot be considered as such.

Further, these proposed regulations would not change the current rule that an institution is not required to refer to the Secretary a Federal Perkins loan overpayment, because all payments must be returned to the institution's revolving loan fund.

Finally, the proposed regulations would not change the fact that under the Return of Title IV Aid calculations in § 668.22, Federal Perkins loans are not treated as an overpayment. Rather, unearned Federal Perkins funds for which the student is responsible are repaid according to the terms of the loan.

Expiration of Ability to Benefit Tests (Sections 668.32 and 668.151)

Current Regulations: As provided in § 668.32(e), an otherwise eligible student who does not have a high school diploma or its recognized equivalent and who does not meet the home-schooled standards of the regulation is eligible to receive Title IV, HEA program assistance only if the student has obtained a passing score, as specified by the Secretary, on an approved ability-to-benefit (ATB) test within 12 months before the date the student initially receives Title IV program assistance.

Section 668.151(a)(2) requires an institution to use the results of an approved test to determine a student's eligibility for Title IV assistance if the approved test was independently and properly administered.

Suggested Change: Institutions suggested that the 12-month limitation on the acceptability of an ATB test passing score was not necessary and should be removed from the regulations. They pointed out that one of the alternatives to a passing score on an approved ATB test is either a high school diploma or its equivalent, but neither the diploma nor its equivalent expires after a certain period of time.

During the negotiated rulemaking discussion on ATB testing, we suggested that the regulations should be modified to make it clear that an institution must obtain the results of an approved ATB test directly from either the test publisher or from the assessment center that administered the test.

Proposed Regulations: The proposed regulations would revise § 668.32(e) by eliminating the provision that limits the duration of a passing score on an approved ATB test to 12 months before a student initially receives Title IV, HEA program assistance.

The proposed regulations would make it clear that an institution must obtain the results of an approved ATB test directly from either the test publisher or the assessment center that administered the test.

Reason: We agreed with the non-Federal negotiators that an ATB test score should be valid for as long as the test publisher or the assessment center that administered the test is able to provide the institution with an official report of the original passing score. In other words, an institution may not accept as a valid passing test score a report it received from the student or from another institution (unless it came from a test assessment center at another institution in accordance with the regulations).

Late Disbursements (Section 668.164)

Current Regulations: Section 668.164(g) sets forth the conditions that must be satisfied before an institution may make a late disbursement to an otherwise eligible student (or the student's parent in the case of a PLUS loan) who has become ineligible either because the student is no longer enrolled at the institution or, for FFEL and Direct Loan purposes, is no longer enrolled on at least a half-time basis. One of the conditions is that the institution must have received a SAR or ISIR for the student before the student became ineligible. If all of the conditions are met, an institution has 90 days from the date the student became ineligible to make the late disbursement.

Suggested Change: Institutions suggested that the regulations be modified to reflect our private letter guidance that allows, under limited circumstances, a late disbursement to be made after the 90-day regulatory deadline. Under this guidance, a guaranty agency, or the Department for a Direct Loan, may permit an institution to make a late disbursement of the loan if the reason the disbursement was not made within 90 days was not the fault of the student.

They also suggested that we clarify the circumstances in which an institution must make a late disbursement and those in which it has the option to do so. In particular, the institutions pointed to the Return of Title IV Aid regulations under which an institution must make a late disbursement (referred to as a ''post-withdrawal disbursement'') and a provision of the late disbursement regulations under which an institution appears to have the choice of whether to make the late disbursement.

The third and fourth suggestions deal with the requirement that, as a condition for making a late disbursement an institution must have received a SAR or ISIR with an official EFC before the date a student became ineligible. The non-Federal negotiators suggested that this requirement should not apply to a late disbursement of a PLUS loan because the EFC is not needed by an institution to certify or originate the loan. Moreover, they believed that it was unfair that some students do not qualify for a late disbursement solely because institutions may not be aware (or cannot document) that they received an ISIR before the date the student became ineligible. To make it fair for all students, the non-Federal negotiators suggested that the date the SAR or ISIR was received by the institution be replaced by the date the Secretary processed a SAR or ISIR with an official EFC for the student.

Proposed Regulations: The proposed regulations would increase the timeframe within which an institution may make a late disbursement from 90 to 120 days. In addition, the proposed regulations would provide that, for those cases in which the student is not at fault, we may approve an institution's request to make a late disbursement after 120 days.

With respect to when an institution must make a late disbursement in cases in which a student withdraws and is eligible for a post-withdrawal disbursement, the proposed regulations incorporate directly, rather than by cross reference, the requirement that an institution must make or offer the disbursement, as appropriate. The proposed regulations would also require an institution to offer or make the late disbursement to the student (or the student's parent for a PLUS loan) for a student who completed the payment period or period of enrollment.

These proposed regulations would adopt the suggestions made by the non-Federal negotiators to eliminate the SAR/ISIR requirement for a late disbursement of a PLUS loan.

The proposed regulations would change the requirement that the institution must have received a SAR or ISIR before the student became ineligible to a requirement that a SAR or ISIR, with an official EFC, must have been processed by the Secretary before the student became ineligible.

Finally, the proposed regulations would eliminate the requirement, that in order for an institution to make a late disbursement of a Federal Pell Grant, it must have received a ''valid'' SAR or ISIR before the student became ineligible. Instead, a student's eligibility for a late Pell Grant disbursement would be based upon the rule that the Secretary must have processed a SAR/ISIR with an official EFC while the student was still eligible. Of course, the institution must receive the SAR or ISIR before the actual disbursement can be made.

Reason: We agree with the non-Federal negotiators that the Department's informal guidance allowing institutions to make late disbursements after the established timeframe in limited cases should be made part of the regulations. Doing so would inform all institutions and guaranty agencies (as opposed to only those that received private-letter guidance) that this procedure is available. However, the proposed regulations differ from the current regulations and guidance in two ways. First, we believe that increasing the timeframe from 90 to 120 days would benefit students and institutions by providing sufficient time, in most cases, for a late disbursement to be made without our approval and without regard to the reason for the late disbursement.

Second, for the limited cases in which it is not the fault of the student that a late disbursement was not made within the 120-day period, an institution would seek our approval (not that of the guaranty agency, as provided under current guidance) to make that disbursement. During the discussion on this point, the negotiators representing guaranty agencies, supported by others, suggested that, for FFEL loans, guaranty agencies continue to be allowed to approve a late disbursement based upon receiving information that the reason for the delay was not the fault of the student. For program integrity reasons, we believe it is more appropriate that we determine whether to approve a late disbursement after the established deadline. We offered assurances that, if this proposed rule is made final, we will implement an expedited process for approving late disbursement requests. While details have not been finalized, we expect that we will establish a single point of contact for requests for late disbursements beyond the proposed 120-day limit. An institution would make its request and provide sufficient information showing that the reason for the delay was not the fault of the student or parent.

It was noted during the discussion that there may be situations where, because of administrative constraints, a late disbursement may not be possible even if the request is made within the applicable timeframes. Examples of these constraints include the closing of an award year's disbursement processing for the Pell Grant and campus-based programs or the termination of an FFEL lender's processing for a year. During the negotiations, we were asked to consider what interventions we could take in our processing to minimize the instances in which a student who was otherwise eligible for a late disbursement could not receive the funds because of these administrative limitations. We will provide additional guidance on this issue at a later time.

In the discussions pertaining to late disbursements for students that withdraw from an institution, the non-Federal negotiators pointed to what they viewed as an apparent conflict in the regulations. Under the provisions of § 668.22, an institution may be required to make a late disbursement (post-withdrawal disbursement) to a student who withdraws during a payment period or period of enrollment. However, under the cash management provisions in § 668.164(g)(3)(i), an institution has the option of making a late disbursement to pay for educational costs that a student incurred for the period in which the student was enrolled and eligible. However, it would be contrary to the primary tenet in § 668.22—that a withdrawn student has earned Title IV loan or grant assistance equal to the percent of the payment period or period of enrollment the student completed—for an institution to deny that student a late disbursement. The current late disbursement regulations at § 668.164(g)(1)(ii) specifically require institutions to follow the provisions in § 668.22 for a student who withdraws from the institution. Although, we are not proposing any change to this requirement, we are proposing to redraft the requirement in order to eliminate any confusion regarding this issue.

Along the same lines, the proposed rule would require an institution to pay or offer a late disbursement to a student who completes the payment period or period of enrollment. Under the requirements of § 668.22, a student who completes more than 60 percent of the payment period or period of enrollment has earned 100 percent of his or her Title IV aid and the institution must make or offer, as appropriate, a post-withdrawal disbursement of any of those funds that were not received. A student who completes 100 percent of the payment period or period of enrollment has the same entitlement to all of his or her Title IV funds for the period. Under the proposed regulations, the institution would be permitted to credit the student's account to pay for current and allowable charges in accordance with the current cash management regulations. For example, an institution would have to provide notice to a student, or parent in the case of a PLUS loan, when the institution credits the student's account with Direct Loan, FFEL, or Federal Perkins Loan Program funds in order to give the student or parent an opportunity to cancel all or a portion of the loan disbursement.

The proposed change that allows a student to be considered for a late disbursement when the Secretary has processed a SAR/ISIR with an official EFC rather than when the institution receives the SAR or ISIR, provides the institution with an easy way to document the student's eligibility since each ISIR record includes the date that the Secretary processed the application and created the SAR/ISIR. More importantly, this proposed change would provide equity to students in the consideration of a late disbursement, since eligibility would be based upon the student's action in submitting an application (FAFSA) or correction to the Secretary and not on when an institution happens to draw its ISIRs from its electronic mailbox.

We agree with the reasons noted by the non-Federal negotiators for proposing changes to the regulations regarding the relevance of the institution receiving a SAR/ISIR for a PLUS loan, and the proposed regulations would not require the institution to rely upon a SAR/ISIR for determining if a parent is eligible for a late disbursement of a PLUS loan. However, we wish to make clear that in cases in which an institution does not have a SAR/ISIR, it may not certify or originate a PLUS loan until it documents that the student for whom the loan is intended meets all the applicable eligibility requirements described in § 668.32 (the student is not in default, does not owe an overpayment, is a citizen or eligible non-citizen, etc.).

Finally, while these proposed regulations would eliminate the requirement that for purposes of a Pell Grant an institution must have received a valid SAR or ISIR before the student withdrew, a valid SAR or ISIR would still be required before an institution could actually make the late disbursement of a Pell Grant.

Notices and Authorizations (Section 668.165)

Current Regulations: Whenever an institution credits a student's account with Title IV, HEA loan funds, it must notify the student (or the student's parent in case of a PLUS loan) of his or her right to cancel all or part of the loan. The notice may be provided in writing or sent electronically. If it is sent electronically, the institution must confirm that the notice was received by the student or parent.

Suggested Change: Institutions suggested that the requirement that an institution confirm the receipt of a notice sent electronically be eliminated.

Proposed Regulations: The proposed regulations would adopt the suggested change.

Reason: We no longer believe this requirement is necessary in view of continuing advances in, and more widespread use of, technologies for conducting electronic transactions. Nevertheless, we expect institutions to take seriously the student's right to reconsider his or her loan obligation (the notice may be the student's last chance to cancel the loan) by taking steps that reasonably ensure that the student receives the notice.

Also, the proposed rule would eliminate the apparent distinction between providing the notice in writing or electronically. In keeping with prior guidance on this matter, we wish to emphasize there is generally no difference in the regulations between the terms ''in writing'' and ''electronically.'' Unless a particular regulation requires otherwise, an institution may comply with a requirement that an activity be conducted ''in writing'' by conducting that activity electronically.

Timely Return of Funds (Sections 668.171 and 668.173)

Current Regulations: Under the provisions of Subpart L of the General Provisions regulations, one of the standards that an institution must satisfy to be financially responsible, as provided in Section 498(c)(6)(A) of the HEA, is that it must have sufficient cash reserves to make required refunds. An institution is considered to have sufficient cash reserves if it is a public institution or it is covered by a State's tuition recovery fund. Otherwise, we consider that an institution has sufficient cash reserves if, for its two most recently completed fiscal years, it makes required refunds in a timely manner, as required in § 668.22(j). On the other hand, an institution is not considered to have sufficient cash reserves if an audit or review finding shows that the institution did not make required refunds in a timely manner for 5 percent or more of the students sampled during the audit or review. In this case, an institution must demonstrate that it has sufficient cash reserves by submitting a letter of credit payable to the Secretary. [Note to readers: The financial responsibility regulations in Subpart L were not fully revised when the Department published the regulations under § 668.22 for returning Title IV, HEA program funds. The regulations for returning funds replaced the previous ''refund'' requirements. To avoid confusion over the terms used in the current regulations, from this point forward we will use the phrase ''returning funds.'']

Suggested Change: The non-Federal negotiators suggested that we clarify the timeframe that an institution has to return unearned Title IV funds that it is responsible for returning. The non-Federal negotiators pointed to § 668.22(j), which provides that an institution must return unearned Title IV, HEA program funds no later than 30 days after the date of the institution's determination that a student withdrew. However, the Department's audit guide is more specific, stating that if the funds are returned by check, the check used must clear the institution's bank within the 30-day period. The non-Federal negotiators believed it was unfair to hold an institution responsible for a check clearance process that is beyond its control. They suggested that we clarify that an institution has 30 days to issue a check. They felt this was important since, in the context of the financial responsibility regulations, any ambiguity in the rules could inadvertently result in an institution having to submit a letter of credit.

During the negotiated rulemaking sessions the non-Federal negotiators made several suggestions regarding the letter of credit requirement. They suggested that the regulations provide that an institution that would otherwise be required to submit a letter of credit not have to do so if the reason that funds were not returned in a timely manner was not the institution's fault or was beyond the institution's control.

They also noted that there may be cases where the initial determination that an institution exceeded the 5 percent threshold was in error. Therefore, they wanted the letter of credit to be required only after a preliminary finding, made during a Department or guaranty agency review, is verified or resolved, as noted in the final review report, rather than at an earlier point in the process such as when the draft report was issued. They pointed out that, as a practical matter, it is not worthwhile to require a letter of credit for a small amount of money. The non-Federal negotiators also suggested changes to the 5 percent threshold and the timeframes for submitting the letter of credit.

Finally, they asserted that an audit or review finding citing an institution for not returning funds in a timely manner may prompt an administrative or compliance arm of the institution to require a comprehensive review of, and changes to, its practices and procedures. The non-Federal negotiators believed that the comprehensive review should not be prompted unnecessarily in cases where the finding is for a de minimis number of untimely returns.

Proposed Regulations: Under the proposal, unearned funds must be returned no later than 30 days after the date of the institution's determination that the student withdrew. The proposed regulations would define specifically when we consider the institution to have returned funds depending upon the method it uses to return the funds. Specifically, the regulations would provide that an institution returns funds when it: (1) Deposits or transfers the funds into the bank account it maintains for Federal funds, (2) initiates an EFT to transfer the funds, (3) initiates an electronic transaction that instructs an FFEL lender to adjust a borrower's loan for the amount of the ''returned funds'', or (4) issues a check. However, if a check is used to return unearned funds, the proposed regulations would also require that the check must be received by an FFEL Program lender or the Secretary no later than 45 days after the institution determined the student withdrew.

In response to suggestions made during the negotiating sessions, these proposed regulations would make several other changes. First, in cases in which there are exceptional circumstances beyond an institution's control or when the institution believes that an auditor or reviewer made an error, the regulations would provide that the institution may request the Secretary to reconsider a finding that it failed to return unearned funds in a timely manner. In its request, the institution would need to submit documents showing that it would not have exceeded the 5 percent threshold had it not been for the exceptional circumstance or error. An institution that submits the request would not be required to submit a letter of credit unless the Secretary notifies the institution that its request is denied.

Second, the proposed regulations would establish timeframes for submitting a letter of credit depending on whether the finding triggering the letter of credit was made in a compliance audit, in a program review conducted by the Department or guaranty agency, or an audit conducted by the Department's Office of the Inspector General (OIG).

Third, the proposed regulations would provide that an institution would not be required to submit a letter of credit of less than $5,000. However, to meet the statutory reserve requirement, such an institution would need to demonstrate that it has available at all times cash reserves of at least $5,000 to make required returns.

Finally, in response to general concerns over the threshold requirement and the consequences of a finding that an institution did not return funds in a timely manner, we propose that the Secretary will consider an institution that makes one or two untimely returns to be in compliance with the reserve standard.

Reason: We agree that the regulations should clearly establish the date by which an institution is required to return unearned funds for which it is responsible. We also would like to stress that one of the reasons for the requirement that funds be returned promptly is so that the student's Title IV loan debt can be promptly and properly reduced.

The proposed provision that an institution initiates an electronic transaction for returning unearned funds (as opposed to initiating an electronic transfer of funds) is intended to accommodate the ''hold and release'' process used by some FFEL Program participants. Under this process, an institution and a lender agree that adjustments to FFEL Program loans, including the return of unearned funds, are made when the institution initiates an electronic transaction notifying the lender of the adjustment or return. The lender then makes the adjustment by crediting or otherwise adjusting the borrower's loan account for the amount returned.

Although we adopted most of the approach suggested by the non-Federal negotiators for returning unearned funds by check, we could not incorporate in the regulations their suggestion to separate the requirement that the check must be issued within 30 days from the requirement that it must be received by an FFEL Program lender or the Secretary within 45 days. Doing so would create a conflict in the regulations. For example, under one section of the regulations an institution would comply with the reserve standard by issuing the check within 30 days. However, in another section of the regulations the institution would not comply with the same reserve standard if the check was not received within 45 days. Consequently, the two-part criteria for determining whether an institution satisfies the reserve standard when it uses a check to return unearned funds are contained in one section of the regulations.

We also agreed that changes should be made to the current regulations to account for errors, or unusual circumstances beyond an institution's control, and to otherwise make more certain that an institution has exceeded the 5 percent threshold before it would be required to submit a letter of credit. In this regard, an institution would be required to submit a letter of credit no later than 30 days after the Department, OIG, or guaranty agency issues a preliminary report that the institution did not return unearned funds in a timely manner for 10 percent or more of the sampled students.

If the finding in the preliminary report is less than 10 percent, an institution would not generally be required to submit the letter of credit unless the final report shows that the institution did not return unearned funds in a timely manner for 5 percent or more of its students. If the letter of credit is required, the institution would have to submit it no later than 30 days after the final report is issued

Finally, if the Secretary believes it is necessary, the Secretary could at any time send a notice to the institution requesting the letter of credit.

Federal Work Study at For-Profit Institutions (Sections 675.2 and 675.21)

Current Regulations: The current FWS Program regulations reflect the limitations placed by the HEA on proprietary institutions with regard to the types of non-community service jobs that FWS students may hold when they are employed by the institution itself. The specific statutory restrictions are provided in section 443(b)(8)(A) of the HEA.

The HEA requires, among other things, that FWS jobs for students who are employed in non-community service jobs by a proprietary institution itself must furnish student services that are directly related to the FWS student's education. The HEA specifies that the definition of ''student services'' is to be determined by the Secretary according to regulations. ''Student services'' are defined in § 675.2(b) of the FWS Program regulations as ''Services that are offered to students that are directly related to the work-study student's training or education and that may include, but are not limited to, financial aid, library, peer guidance counseling, and social, health, and tutorial services.''

The statutory requirements for FWS jobs at a proprietary institution are reflected in § 675.21(b) of the regulations. Specifically § 675.21(b)(2) states that if the FWS jobs are not community service jobs they must be on campus, provide student services, complement the student's educational program or vocational goals to the maximum extent possible, and not involve soliciting potential students to enroll at the institution. Section 675.21(b)(2) provides a reference to the definition of ''student services'' in § 675.2 for the previously discussed requirement that the services must be directly related to the FWS student's education.

Suggested Change: Proprietary institutions have suggested at conferences, meetings, and in letters that the current FWS Program regulations in § 675.2(b) that define ''student services'' and our guidance on employment at these institutions be changed to expand employment opportunities for FWS students employed in non-community service jobs by the proprietary institution itself. The proprietary institutions especially urged us to allow FWS students to assist instructors in curriculum-related activities that are prohibited under current policies.

These institutions also suggested that we modify past guidance and state in the regulations that, in furnishing student services, FWS students are not required to provide direct or personal services. The proprietary institutions further suggested that we provide in the regulations examples of FWS jobs that would never be considered student services. In addition, these institutions suggested that the statutory requirement that the non-community service FWS jobs must furnish student services that are directly related to the student's training or education be removed from the definition of ''student services'' and be placed in the same section of the FWS Program regulations (§ 675.21(b)) in which the other requirements for employment at a proprietary institution are located.

Proposed Regulations: The proposed regulations would amend the definition of ''student services'' in § 675.2(b) first by, adding more examples of jobs in which a proprietary institution may employ students on campus to work for the institution itself. The examples that would be added to the definition of

student services are job placement, assisting instructors in curriculum-related activities, and security. Second, the proposed changes to the definition of ''student services'' would modify past guidance and indicate that there is no expectation that the FWS job involve direct or personal services. Third, the proposed changes to the definition of ''student services'' would specify that some jobs, such as facility maintenance, cleaning, purchasing, and public relations, are never considered student services. Finally, the statutory requirement that the non-community service job must provide student services that are directly related to the FWS student's training or education would be removed from the definition of ''student services'' in § 675.2 and placed in § 675.21(b)(2) of the FWS regulations.

Reason: Many proprietary institutions informed us that the current definition of ''student services'' in the FWS Program regulations and our current guidance on that definition do not support or address the needs of the student population at most proprietary institutions that offer short-term training in a specific skill. A number of proprietary institutions have also expressed the concern that our current definition and guidance result in students being denied valuable on-the-job experience in their chosen fields of study. The proprietary institutions have asked for more flexibility in establishing FWS jobs on campus to enable students to find FWS work that fits into their academic schedules and to earn money to pay their educational costs. These institutions further stated that some of the types of jobs currently excluded actually do provide a service to students at proprietary institutions, although some jobs provide this more directly than others. The negotiators agreed with the reasons provided by the proprietary institutions.

We agree that many proprietary institutions can offer FWS jobs that provide essential services to students and that the regulations can provide greater flexibility in this area. Therefore, these proposed regulations would expand the definition of ''student services'' in § 675.2(b) of the FWS regulations to broaden the scope of FWS job opportunities for students who attend proprietary institutions. The negotiators welcomed the proposed expansion of the definition of student services and the proposed increase of FWS job opportunities for students attending proprietary institutions.

The proposed change would expand the definition of ''student services'' by adding further examples of acceptable work areas. The new examples are job placement, assisting instructors in curriculum-related activities, and security. For example, an FWS student would be able to work in a proprietary institution's placement office helping students find jobs. Under the proposed regulations, an FWS student would be able to assist an instructor in the lab or in other work related to the instructor's official academic duties at the institution and have such work considered a student service. Also, an FWS student would be able to perform security functions such as being a night watchman or being an institution security officer. These security roles have taken on increased importance and are now considered an essential student service for the protection of students and their property. The list of areas in which FWS employment is authorized is not meant to be exhaustive. However, we believe that they are excellent examples of employment that provide student services.

The proposed regulations would modify guidance issued in the past that stated that the FWS student had to provide direct and personal services to other students. A service would be considered a ''student service'' if the service provides a benefit either directly or indirectly to students. Proprietary institutions would be given more flexibility in establishing what types of jobs performed by FWS students at their institutions provide a direct or indirect benefit to other students. Further, the fact that a job has some operational functions does not preclude it from being an acceptable FWS job as long as it furnishes student services.

Work that does not serve students will still not be permissible. Thus, because facility maintenance, cleaning, purchasing, and public relations jobs primarily benefit the institution, the proposed changes would specify that such jobs are not considered student services under the FWS Program. There are, of course, other jobs that also would not be considered student services.

The proposed regulations would remove from the definition of ''student services'' in § 675.2(b) the requirement that the non-community service job provide student services that are directly related to the FWS student's training or education. This requirement would be made clearer by being moved to § 675.21(b), where the other requirements for employment at a proprietary institution are located. The negotiators agreed with this proposed regulation change for clarity of this requirement.

Even with the expanded opportunities for student services, proprietary institutions should note that the statute and the proposed regulations in § 675.21(b)(2) still require that student services must be directly related to the FWS student's education when the FWS student is employed in a non-community service job by the institution itself. For example, a job that involves working in job placement would be considered directly related to an FWS student's education or training for a student enrolled in the area of human resources, management, or business. In a second example, a job that involves assisting an instructor in academic-related activities of the program in which the student was enrolled would be considered as being directly related to an FWS student's education or training. In a final example, work in security, for an FWS student enrolled in the field of law enforcement or a related field, would also be considered directly related to the student's education.

Institutions are also reminded that the proposed regulations would not change other requirements of the regulations. Students who are employed by the proprietary institution itself may be employed in FWS non-community service jobs only when those jobs are on campus and when they complement and reinforce the education programs and vocational goals of the FWS student to the maximum extent practicable. Finally, work in the admissions or recruitment area of an institution would continue to be prohibited, as this employment is considered to involve soliciting potential students to enroll at the institution.

GEAR UP Program (Section 694.10)

Current Regulations: Section 694.10(e) of the regulations interprets sections 404E(c) and 404C(b)(1)(C) of the HEA to require that GEAR UP scholarship funds not supplant other gift aid that the student would otherwise have been eligible to receive. Specifically, § 694.10(e) requires that a student eligible for a GEAR UP scholarship be awarded financial aid in the following order: Federal Pell Grant; any other public or private grants, scholarships, or tuition discounts; the GEAR UP scholarship; and other financial assistance, such as loans or work-study. An exception to this required awarding order is allowed if the institution documents that there are exceptional circumstances related to the GEAR UP student's aid package that are unique to that GEAR UP student.

Suggested Change: Members of the institutional community suggested that the requirement that an institution award student financial assistance in an

established order for GEAR UP scholarship recipients be eliminated.

Proposed Regulations: These proposed regulations would remove the requirement that an institution award student financial assistance in an established order for students who are eligible for a GEAR UP scholarship. The proposed regulations would only specify the statutory requirement in section 404E(c) of the HEA that GEAR UP scholarships not be considered in awarding Title IV grant assistance. As a result, under this proposal, an institution would treat GEAR UP scholarships as they relate to other gift aid (e.g., grants and scholarships) as the institution sees fit, except in the case of Title IV grant assistance, which must be awarded without regard to a student's eligibility for a GEAR UP scholarship.

The requirement of section 404(b)(1)(C) of the HEA, although no longer applicable to individual student aid packages, would continue to apply to States and Partnerships at the program level, meaning that States and Partnerships must include as a part of their participation plan an assurance that GEAR UP funds will supplement and not supplant other funds expended by the States and Partnerships for existing programs.

Section 694.10(c) of the regulations, which implements the portion of section 404E(c) of the HEA that provides that a GEAR UP scholarship, in combination with any Title IV assistance or other grant or scholarship assistance, may not exceed the student's cost of attendance, would remain unchanged.

Reason: Several negotiators expressed concern with the current requirement that an institution award aid to a student eligible for a GEAR UP scholarship in a particular order. These negotiators felt that it was highly inappropriate for the regulations to dictate a packaging policy for institutions. They maintained that institutions are in the best position to determine the financial aid package that will best meet the student's needs.

One negotiator expressed support for the current packaging requirement, noting that the intent in implementing it was to insure that a student who is eligible to receive a GEAR UP scholarship would benefit from as significant a reduction in his or her postsecondary expenses as intended by the statute. The negotiator was concerned that in the absence of the institutional packaging requirement, GEAR UP students might not get the full benefit of their GEAR UP grant. Several of the negotiators opposed to the current requirement argued that the opposite is true. They contended that because institutions are not in a position of ensuring a reduction in gift aid provided by outside entities, GEAR UP scholarship students would have to forego benefiting from additional sources of aid that are required to be used as ''last dollar'' assistance. In addition, those opposed to the current provision believed that because of the concerns that they cited, some institutions would choose not to participate in the GEAR UP scholarship program.

The committee reached tentative agreement to remove the institutional packaging requirements from the regulations. The committee believed that the goal of assuring a significant level of assistance to GEAR UP scholarship recipients could be achieved without mandating a Federal financial aid packaging order. The negotiator who had expressed concern with the removal of the packaging requirements stated a hope that if this change to the regulation is made, institutions would be eager to participate in the GEAR UP program.

Executive Order 12866

1. Potential Costs and Benefits

Under Executive Order 12866, we have assessed the potential costs and benefits of this regulatory action.

The potential costs associated with the proposed regulations are those resulting from statutory requirements and those we have determined to be necessary for administering these programs effectively and efficiently.

Elsewhere in this **SUPPLEMENTARY INFORMATION** section we identify and explain burdens specifically associated with information collection requirements. See the heading Paperwork Reduction Act of 1995.

In assessing the potential costs and benefits—both quantitative and qualitative—of this regulatory action, we have determined that the benefits would justify the costs.

We have also determined that this regulatory action would not unduly interfere with State, local, and tribal governments in the exercise of their governmental functions.

Summary of Potential Costs and Benefits

The Secretary is amending these regulations to reduce administrative burden for program participants, provide benefits to students and borrowers, and to protect the taxpayers' interests. The proposed regulations are fully described elsewhere in this preamble. The Department of Education has estimated that the proposed regulations would have no effect on Federal costs over FY 2002–2006.

2. Clarity of the Regulations

Executive Order 12866 and the Presidential Memorandum on ''Plain Language in Government Writing'' require each agency to write regulations that are easy to understand. The Secretary invites comments on how to make these proposed regulations easier to understand, including answers to questions such as the following:

- Are the requirements in the proposed regulations clearly stated?
- Do the proposed regulations contain technical terms or other wording that interferes with their clarity?
- Does the format of the proposed regulations (grouping and order of sections, use of headings, paragraphing, etc.) aid or reduce their clarity?
- Would the proposed regulations be easier to understand if we divided them into more (but shorter) sections? A ''section'' is preceded by the symbol ''§ '' and a numbered heading; for example, § 668.35 Student Debts under the HEA and to the U.S.
- Could the description of the proposed regulations in the **SUPPLEMENTARY INFORMATION** section of this preamble be more helpful in making the proposed regulations easier to understand? If so, how?
- What else could we do to make the proposed regulations easier to understand?

Send any comments that concern how the Department could make these proposed regulations easier to understand to the person listed in the **ADDRESSES** section of the preamble.

Regulatory Flexibility Act Certification

The Secretary certifies that these proposed regulations would not have a significant economic impact on a substantial number of small entities. These proposed regulations would affect institutions of higher education, lenders, and guaranty agencies that participate in Title IV, HEA programs, and individual students and loan borrowers. The U.S. Small Business Administration (SBA) Size Standards define for-profit or nonprofit institutions with total annual revenue below $5,000,000 or institutions controlled by governmental entities with populations below 50,000, and lenders with total assets under $100 million, as ''small entities.'' Guaranty agencies are State and private nonprofit entities that act as agents of the Federal government, and as such are not considered ''small entities'' under the Regulatory Flexibility Act. Individuals

are also not defined as ''small entities'' under the Regulatory Flexibility Act.

A significant percentage of the over 4,000 lenders participating in the FFEL Program meets the definition of ''small entities.'' While these lenders and a number of institutions fall within the SBA size guidelines, the proposed regulations do not impose significant new costs on these entities.

The Secretary invites comments from small institutions and lenders as to whether they believe the proposed changes would have a significant economic impact on them and if so, requests evidence to support that belief.

Paperwork Reduction Act of 1995

Proposed §§ 600.31, 668.22, 668.165, 668.173, and 673.5 contain information collection requirements. Under the Paperwork Reduction Act of 1995 (44 U.S.C. 3507(d)), the Department of Education has submitted a copy of these sections to the Office of Management and Budget (OMB) for its review.

Collection of Information: Institutional Eligibility under the Higher Education Act of 1965, as amended—

Section 600.31—Change in Ownership Resulting in a Change in Control for Private Nonprofit, Private For-Profit and Public Institutions

The proposed regulations expand the conditions under which a change in the ownership of an institution is not considered a change of ownership for institutional eligibility purposes when the transfer is to a family member. The proposed regulations also exclude a transfer of ownership upon the death or retirement of an owner to a member of management who has had an ownership interest during the preceding two years. We expect the decrease in burden to be insignificant because of the small number of institutions who annually report under this regulation and of that number the few instances where a change in ownership would meet the expanded exemption and therefore would not be required to file.

Student Assistance General Provisions—Section 668.22—Treatment of Title IV Funds When a Student Withdraws

The proposed regulations would clarify the definition of ''an institution that is required to attendance''. Also, under the proposed regulations, an institution would only be required to insure that the sum of all leaves of absence that a Title IV aid recipient takes does not exceed 180 days within a 12-month period (as opposed to the current rule where an institution must determine whether subsequent leaves of absence meet certain special terms). There would be no significant impact upon burden associated with this requirement.

Section 668.165—Notices and Authorizations

The proposed regulation would reduce burden under this section by eliminating the ''confirm receipt'' requirement for a notice sent electronically to a student or parent (the notice informs the student or parent of his or her right to cancel a loan or loan disbursement). The proposed changes do not change the burden hours associated with this section of the regulations because there is no burden currently associated with this provision.

Section 668.173—Refund Reserve Standard

The proposed regulations would provide greater flexibility to an institution that is cited in an audit or review report for failing to return unearned Title IV program funds in a timely manner. Under the current regulations, an institution that is cited for this reason must automatically submit a letter of credit to the Secretary. Under this proposal, the institution would be able to demonstrate that circumstances beyond its control inappropriately triggered the audit or review finding or that the finding was erroneously made. If the Secretary determines that the finding was inappropriately or erroneously made, the institution would not have to submit a letter of credit. The proposed regulations would also provide that the Secretary or guaranty agency may delay requiring a letter of credit from the institution until the final audit or review report is issued. In addition, the proposed regulations would not require the institution to submit the letter of credit if the amount of the letter of credit is less than $5,000.

The proposed regulations could marginally increase the burden on some institutions because while institutions that are cited may submit documentation showing that the finding was inappropriately or erroneously made, they would not be required to submit a letter of credit.

General Provisions for the Federal Perkins Loan, FWS, and FSEOG Programs—Section 673.5—Overaward

The proposed regulations would modify the process for referring overpayments by specifying that a student is not liable for certain overpayments less than $25. The proposed regulations would clarify and simplify the current process by providing that an institution only has to refer the Federal portion of certain FSEOG overpayments, and by making consistent the process for reporting overpayments for all the relevant programs. There are no new information collection requirements as a result of changing this section.

If you want to comment on the information collection requirements, please send your comments to the Office of Information and Regulatory Affairs, OMB, Room 10235, New Executive Office Building, Washington, DC, 20503; Attention: Desk Officer for U.S. Department of Education. You may also send a copy of these comments to the Department representative named in the **ADDRESSES** section of this preamble.

We consider your comments on these proposed collections of information in—

- Deciding whether the proposed collections are necessary for the proper performance of our functions, including whether the information will have practical use;
- Evaluating the accuracy of our estimate of the burden of the proposed collections, including the validity of our methodology and assumptions;
- Enhancing the quality, usefulness, and clarity of the information we collect; and
- Minimizing the burden on those who must respond. This includes exploring the use of appropriate automated, electronic, mechanical, or other technological collection techniques or other forms of information technology; e.g., permitting electronic submission of responses.

OMB is required to make a decision concerning the collections of information contained in these proposed regulations between 30 and 60 days after publication of this document in the **Federal Register**. Therefore, to ensure that OMB gives your comments full consideration, it is important that OMB receives the comments within 30 days of publication. This does not affect the deadline for your comments to us on the proposed regulations.

If you want to comment on the information collection requirements, please send your comments to the Office of Information and Regulatory Affairs, OMB, room 10235, New Executive Office Building, Washington, DC 20503; Attention: Desk Officer for U.S. Department of Education. You may also send a copy of these comments to the Department representative named in the **ADDRESSES** section of this preamble.

We consider your comments on these proposed collections of information in—

- Deciding whether the proposed collections are necessary for the proper performance of our functions, including

whether the information will have practical use;

• Evaluating the accuracy of our estimate of the burden of the proposed collections, including the validity of our methodology and assumptions;

• Enhancing the quality, usefulness, and clarity of the information we collect; and

• Minimizing the burden on those who must respond. This includes exploring the use of appropriate automated, electronic, mechanical, or other technological collection techniques or other forms of information technology; e.g., permitting electronic submission of responses.

OMB is required to make a decision concerning the collections of information contained in these proposed regulations between 30 and 60 days after publication of this document in the **Federal Register**. Therefore, to ensure that OMB gives your comments full consideration, it is important that OMB receives the comments within 30 days of publication. This does not affect the deadline for your comments to us on the proposed regulations.

Assessment of Educational Impact

The Secretary particularly requests comments on whether these proposed regulations would require transmission of information that any other agency or authority of the United States gathers or makes available.

Electronic Access to This Document

You may view this document, as well as all other Department of Education documents published in the **Federal Register**, in text or Adobe Portable Document Format (PDF) on the Internet at the following site: *www.ed.gov/legislation/FedRegister.*

To use PDF you must have Adobe Acrobat Reader, which is available free at this site. If you have questions about using PDF, call the U.S. Government Printing Office (GPO), toll free, at 1–888–293–6498; or in the Washington, DC, area at (202) 512–1530.

You may also view this document in PDF format at the following site: *ifap.ed.gov.*

Note: The official version of this document is the document published in the **Federal Register**. Free Internet access to the official edition of the **Federal Register** and the Code of Federal Regulations is available on GPO Access at: *http://www.access.gpo.gov/nara/index.html.*

(Catalog of Federal Domestic Assistance Numbers: 84.007 Federal Supplemental Educational Opportunity Grant Program; 84.032 Federal Family Education Loan Program; 84.033 Federal Work-Study Program; 84.038 Federal Perkins Loan Program; 84.063 Federal Pell Grant Program; 84.268 William D. Ford Federal Direct Loan Program)

List of Subjects

34 CFR Parts 600 and 668

Administrative practice and procedure, Colleges and universities, Consumer protection, Education, Grant programs—education, Loan programs—education, Reporting and recordkeeping requirements, Student aid, Vocational education.

34 CFR Parts 673 and 675

Administrative practice and procedure, Colleges and universities, Consumer protection, Education, Employment, Grant programs—education, Loan programs—education, Reporting and recordkeeping requirements, Student aid, Vocational education.

34 CFR Parts 682 and 685

Administrative practice and procedure, College and universities, Education, Loan programs—education, Reporting and recordkeeping requirements, Student aid, Vocational education.

34 CFR Part 690

Grant programs—education, Reporting and recordkeeping requirements, Student aid.

34 CFR Part 694

Colleges and universities, Elementary and secondary education, Grant programs—education, Reporting and recordkeeping requirements, Student aid.

Dated: August 5, 2002.

Rod Paige,

Secretary of Education.

For the reasons discussed in the preamble, the Secretary proposes to amend parts 600, 668, 673, 675, 682, 685, 690, and 694 of title 34 of the Code of Federal Regulations as follows:

PART 600—INSTITUTIONAL ELIGIBILITY UNDER THE HIGHER EDUCATION ACT OF 1965, AS AMENDED

1. The authority citation for part 600 is revised to read as follows:

Authority: 20 U.S.C. 1001, 1002, 1003, 1088, 1091, 1094, 1099b, and 1099c, unless otherwise noted.

§ 600.8 [Amended]

2. Section 600.8 is amended by adding ''proprietary institution of higher education or a postsecondary vocational'' after ''eligible''.

3. Section 600.21 is amended by revising paragraph (f) to read as follows:

§ 600.21 Updating application information.

* * * * *

(f) *Definition.* A family member includes a person's—

(1) Parent or stepparent, sibling or step-sibling, spouse, child or stepchild, or grandchild or step-grandchild;

(2) Spouse's parent or stepparent, sibling or step-sibling, child or stepchild, or grandchild or step-grandchild;

(3) Child's spouse; and

(4) Sibling's spouse.

4. Section 600.31 is amended by revising paragraph (e) to read as follows:

§ 600.31 Change in ownership resulting in a change in control for private nonprofit, private for-profit and public institutions.

* * * * *

(e) *Excluded transactions.* A change in ownership and control reported under § 600.21 and otherwise subject to this section does not include a transfer of ownership and control of all or part of an owner's equity or partnership interest in an institution, the institution's parent corporation, or other legal entity that has signed the institution's Program Participation Agreement—

(1) From an owner to a ''family member'' of that owner as defined in § 600.21(f); or

(2) Upon the retirement or death of the owner, to a person with an ownership interest in the institution who has been involved in management of the institution for at least two years preceding the transfer and who established and retained the ownership interest for at least two years prior to the transfer.

PART 668—STUDENT ASSISTANCE GENERAL PROVISIONS

5. The authority citation for part 668 continues to read as follows:

Authority: 20 U.S.C. 1001, 1002, 1003, 1085, 1091, 1091b, 1092, 1094, 1099c, and 1099c–1, unless otherwise noted.

§ 668.2 [Amended]

6. Section 668.2(b) is amended by removing the definition of ''Academic year''.

7. Section 668.3 is revised to read as follows:

§ 668.3 Academic year.

(a) *General.* Except as provided in paragraph (c) of this section, an academic year is a period that begins on the first day of classes and ends on the last day of classes or examinations during which—

(1) An institution provides a minimum of 30 weeks of instructional time; and

(2) For an undergraduate educational program, a full-time student is expected to complete at least—

(i) Twenty-four semester or trimester credit hours or 36 quarter credit hours for a program measured in credit hours; or

(ii) 900 clock hours for a program measured in clock hours.

(b) *Definitions.* For purposes of paragraph (a) of this section—

(1) A week is a consecutive seven-day period;

(2) A week of instructional time is any week in which at least one day of regularly scheduled instruction or examinations occurs or, after the last scheduled day of classes for a term or payment period, at least one day of study for final examinations occurs; and

(3) Instructional time does not include any vacation periods, homework, or periods of orientation or counseling.

(c) Reduction in the length of an academic year.

(1) Upon the written request of an institution, the Secretary may approve, for good cause, an academic year of between 26 and 29 weeks of instructional time for educational programs offered by the institution if the institution offers a two-year program leading to an associate degree or a four-year program leading to a baccalaureate degree.

(2) An institution's written request must—

(i) Identify each educational program for which the institution requests a reduction, and the requested number of weeks of instructional time for that program;

(ii) Demonstrate good cause for the requested reductions; and

(iii) Include any other information that the Secretary may require to determine whether to grant the request.

(3)(i) The Secretary approves the request of an eligible institution for a reduction in the length of its academic year if the institution has demonstrated good cause for granting the request and the institution's accrediting agency and State licensing agency have approved the request.

(ii) If the Secretary approves the request, the approval terminates when the institution's program participation agreement expires. The institution may request an extension of that approval as part of the recertification process.

(Approved by the Office of Management and Budget under control number 1840–0537)

(Authority: 20 U.S.C. 1088)

8. Section 668.4 is revised to read as follows:

§ 668.4 Payment period.

(a) *Payment periods for an eligible program that measures progress in credit hours and has academic terms.* For a student enrolled in an eligible program that is offered in terms and measures progress in credit hours, the payment period is the academic term.

(b) *Payment periods for an eligible program that measures progress in credit hours and does not have academic terms*—(1) For a student enrolled in an eligible program that is one academic year or less in length—

(i) The first payment period is the period of time in which the student completes half the number of credit hours in the program and half the number of weeks in the program; and

(ii) The second payment period is the period of time in which the student completes the program.

(2) For a student enrolled in an eligible program that is more than one academic year in length—

(i) For the first academic year and any subsequent full academic year—

(A) The first payment period is the period of time in which the student completes half the number of credit hours in the academic year and half the number of weeks in the academic year; and

(B) The second payment period is the period of time in which the student completes the academic year.

(ii) For any remaining portion of an eligible program that is more than one-half an academic year but less than a full academic year in length—

(A) The first payment period is the period of time in which the student completes half the number of credit hours in the remaining portion of the program and half the number of weeks remaining in the program; and

(B) The second payment period is the period of time in which the student completes the remainder of the program.

(iii) For any remaining portion of an eligible program that is not more than half an academic year, the payment period is the remainder of the program.

(3) For purposes of paragraphs (b)(1) and (b)(2) of this section, if an institution is unable to determine when a student has completed half of the credit hours in a program, academic year, or the remainder of a program; the student is considered to begin the second payment period of the program, academic year, or remainder of a program at the later of—

(i) When, as determined by the institution, the student has completed half of the academic coursework in the program, academic year, or the remainder of the program; or

(ii) The calendar midpoint between the first and last scheduled days of class of the program, academic year, or the remainder of the program.

(c) *Payment periods for an eligible program that measures progress in clock hours.* (1) For a student enrolled in an eligible program that is one academic year or less in length—

(i) The first payment period is the period of time in which the student completes half the number of clock hours in the program; and

(ii) The second payment period is the period of time in which the student completes the program.

(2) For a student enrolled in an eligible program that is more than one academic year in length—

(i) For the first academic year and any subsequent full academic year—

(A) The first payment period is the period of time in which the student completes half the number of clock hours in the academic year; and

(B) The second payment period is the period of time in which the student completes the remaining number of clock hours in the academic year.

(ii) For any remaining portion of an eligible program that is more than one-half an academic year but less than a full academic year in length—

(A) The first payment period is the period of time in which the student completes half the number of clock hours in the remaining portion of the program; and

(B) The second payment period is the period of time in which the student completes the remainder of the program.

(iii) For any remaining portion of an eligible program that is not more than one half of an academic year, the payment period is the remainder of the program.

(d) *Number of payment periods.* Notwithstanding paragraphs (b) and (c) of this section, an institution may choose to have more than two payment periods. If an institution so chooses, the regulations in paragraphs (b) and (c) of this section are modified to reflect the increased number of payment periods. For example, if an institution chooses to have three payment periods in an academic year in a program that measures progress in credit hours but does not have academic terms, each payment period must correspond to one-third of the academic year measured in both credit hours and weeks of instruction.

(e) *Re-entry within 180 days.* If a student withdraws from a program described in paragraph (b) or (c) of this section during a payment period and then reenters that program within 180 days, the student remains in that same

payment period when he or she returns and, subject to conditions established by the Secretary or by the FFEL lender or guaranty agency, is eligible to receive any title IV student assistance funds for which he or she was eligible prior to withdrawal, including funds that were returned by the institution or student under the provisions of § 668.22.

(f) *Re-entry after 180 days or transfer.* (1) Subject to the conditions of paragraph (f)(2) of this section, an institution calculates new payment periods for the remainder of the student's program based on paragraphs (b) through (d) of this section, for a student who withdraws from a program described in paragraphs (b) or (c) of this section, and—

(i) Reenters that program after 180 days,

(ii) Transfers into another program at the same institution within any time period, or

(iii) Transfers into a program at another institution within any time period.

(2) For a student described in paragraph (f)(1) of this section—

(i) For the purpose of calculating payment periods only, the length of the program is the number of credit hours and the number of weeks, or the number of clock hours, that the student has remaining in the program he or she enters or reenters, and

(ii) If the remaining hours, and weeks, if applicable constitute one-half of an academic year or less, the remaining hours constitute one payment period.

(Authority: 20 U.S.C. *et seq.*)

9. Section 668.8 is amended by:

A. Revising paragraph (b)(3).

B. Removing paragraph (b)(4).

The revision reads as follows:

§ 668.8 Eligible program.

* * * * *

(b) * * *

(3)(i) The Secretary considers that an institution provides one week of instructional time in an academic program during any week the institution provides at least one day of regularly scheduled instruction or examinations, or, after the last scheduled day of classes for a term or a payment period, at least one day of study for final examinations.

(ii) Instructional time does not include any vacation periods, homework, or periods of orientation or counseling.

* * * * *

10. Section 668.14(b)(22) is revised to read as follows:

§ 668.14 Program participation agreement.

* * * * *

(b) * * *

(22)(i) It will not provide any commission, bonus, or other incentive payment based directly or indirectly upon success in securing enrollments or financial aid to any person or entity engaged in any student recruiting or admission activities or in making decisions regarding the awarding of title IV, HEA program funds, except that this limitation does not apply to the recruitment of foreign students residing in foreign countries who are not eligible to receive title IV, HEA program funds.

(ii) Activities and arrangements that an institution may carry out without violating the provisions of paragraph (b)(22)(i) of this section include, but are not limited to:

(A) The payment of fixed compensation, such as a fixed annual salary or a fixed hourly wage, as long as that compensation is not adjusted up or down more than twice during any twelve month period, and any adjustment is not based solely on the number of students recruited, admitted, enrolled, or awarded financial aid. For this purpose, an increase in fixed compensation resulting from a cost of living increase that is paid to all or substantially all employees is not considered an adjustment.

(B) Compensation to recruiters based upon their recruitment of students who enroll only in programs that are not eligible title IV, HEA programs.

(C) Compensation to recruiters who arrange contracts between the institution and an employer under which the employer's employees enroll in the institution, and the employer pays, directly or by reimbursement, 50 percent or more of the tuition and fees charged to its employees; provided that the compensation is not based upon the number of employees who enroll in the institution, or the revenue they generate, and the recruiters have no contact with the employees.

(D) Compensation paid as part of a profit-sharing or bonus plan, as long as those payments are made to all or substantially all of the institution's full-time professional and administrative staff. Such payments can be limited to all, or substantially all of the full-time employees at one or more organizational level at the institution, except that an organizational level may not consist predominantly of recruiters, admissions staff, or financial aid staff.

(E) Compensation that is based upon students successfully completing their educational programs, or one academic year of their educational programs, whichever is shorter. For this purpose, successful completion of an academic year means that the student has earned at least 24 semester or trimester credit hours or 36 quarter credit hours, or has successfully completed at least 900 clock hours of instruction.

(F) Compensation paid to employees who perform ''pre-enrollment'' activities, such as answering telephone calls, referring inquiries, or distributing institutional materials, as long as the compensation is not based on the number of people actually enrolled.

(G) Compensation to managerial or supervisory employees who do not directly manage or supervise employees who are directly involved in recruiting or admissions activities, or the awarding of title IV, HEA program funds.

(H) The awarding of token gifts to the institution's students or alumni, provided that the gifts are not in the form of money, no more than one gift is provided annually to an individual, and the cost of the gift is not more than $100.

(I) Profit distributions proportionately based upon an individual's ownership interest in the institution.

(J) Compensation paid for Internet-based recruitment and admission activities that provide information about the institution to prospective students, or permit them to apply for admission on-line.

(K) Payments to third parties, including tuition sharing arrangements, that deliver various services to the institution provided that none of the services involve recruiting or admission activities, or the awarding of title IV, HEA program funds.

(L) Payments to third parties, including tuition sharing arrangements, that deliver various services to the institution, even if one of the services involve recruiting or admission activities or the awarding of title IV, HEA program funds, provided that the individuals performing the recruitment or admission activities, or the awarding of title IV, HEA program funds, are not compensated in a manner that would be impermissible under paragraph (b)(22) of this section.

* * * * *

11. Section 668.22 is amended by:

A. Revising paragraph (b)(3)(i).

B. Revising paragraph (d)(1)(vi).

C. Removing paragraph (d)(1)(vii).

D. Redesignating paragraphs (d)(1)(viii) and (d)(1)(ix) as (d)(1)(vii) and (d)(1)(viii), respectively.

E. Removing paragraph (d)(2).

F. Redesignating paragraphs (d)(3) and (d)(4) as (d)(2) and (d)(3), respectively.

G. Removing ''on'' and adding in its place ''at'' in newly redesignated paragraph (d)(2).

H. Removing ''are'' and adding in its place ''is'' in newly redesignated paragraph (d)(3)(i).

I. Adding '', that includes the reason for the request,'' after ''request'' in newly redesignated paragraph (d)(3)(iii)(B).

J. Adding ''The timeframe for returning funds is further described in § 668.173(b) and (c)(3).'' at the end of paragraph (j)(1).

The revisions read as follows:

§ 668.22 Treatment of title IV funds when a student withdraws.

* * * * *

(b) * * *

(3)(i) An institution is required to take attendance if an outside entity (such as the institution's accrediting agency or a State agency) has a requirement, as determined by the entity, that the institution take attendance.

* * * * *

(d) * * *

(1) * * *

(vi) The number of days in the approved leave of absence, when added to the number of days in all other approved leaves of absence, does not exceed 180 days in any 12-month period;

* * * * *

§ 668.32 [Amended]

12. Section 668.32(e)(2) is amended by removing ''within 12 months before the date the student initially receives title IV, HEA program assistance,''.

13. Section 668.35(c) is revised to read as follows:

§ 668.35 Student debts under the HEA and to the U.S.

* * * * *

(c) A student who receives an overpayment under the Federal Perkins Loan Program, or under a title IV, HEA grant program may nevertheless be eligible to receive title IV, HEA program assistance if—

(1) The student pays the overpayment in full;

(2) The student makes arrangements satisfactory to the holder of the overpayment debt to pay the overpayment; or

(3) The overpayment amount is less than $25 and is neither a remaining balance nor a result of the application of the overaward threshold in 34 CFR 673.5(d).

* * * * *

§ 668.151 [Amended]

14. Section 668.151(a)(2) is amended by adding the words ''it received from an approved test publisher or assessment center'' after ''an approved test'.

15. Section 668.164(g) is revised to read as follows:

§ 668.164 Disbursing funds.

* * * * *

(g) *Late disbursements*— (1) *Ineligible student.* For purposes of this paragraph, an otherwise eligible student becomes ineligible to receive title IV, HEA program funds on the date that—

(i) For a loan under the FFEL and Direct Loan programs, the student is no longer enrolled at the institution as at least a half-time student for the loan period; or

(ii) For an award under the Federal Pell Grant, FSEOG, and Federal Perkins Loan programs, the student is no longer enrolled at the institution for the award year.

(2) *Conditions for a late disbursement.* Except as limited under paragraph (g)(4) of this section, a student who becomes ineligible (or the student's parent in the case of a PLUS loan) qualifies for a late disbursement if, before the date the student became ineligible—

(i) Except in the case of a PLUS loan, the Secretary processed a SAR or ISIR with an official expected family contribution; and

(ii)(A) For a loan under the FFEL or Direct Loan programs, the institution certified or originated the loan; or

(B) For an award under the Federal Perkins Loan or FSEOG programs, the institution made that award to the student.

(3) *Making a late disbursement.* Provided that the conditions described in paragraph (g)(2) of this section are satisfied—

(i) If the student withdrew from the institution during a payment period or period of enrollment, the institution must make any post-withdrawal disbursement required under § 668.22(a)(3) in accordance with the provisions of § 668.22(a)(4);

(ii) If the student successfully completed the payment period or period of enrollment, the institution must provide the student (or parent) the opportunity to receive the amount of title IV, HEA program funds that the student (or parent) was eligible to receive while the student was enrolled at the institution. For a late disbursement in this circumstance, the institution may credit the student's account to pay for current and allowable charges as described in paragraph (d) of this section, but must pay or offer any remaining amount to the student or parent; or

(iii) If the student did not withdraw but ceased to be enrolled as at least a half-time student, the institution may make the late disbursement of a loan under the FFEL or Direct Loan programs to pay for educational costs that the institution determines the student incurred for the period in which the student was eligible.

(4) *Limitations.* (i) Generally, an institution may not make a late disbursement later than 120 days after the date of the institution's determination that the student withdrew, as provided under § 668.22, or, for a student who did not withdraw, 120 days after the date the student otherwise became ineligible. On an exception basis, and with the approval of the Secretary, an institution may make a late disbursement after the applicable 120-day period, if the reason the late disbursement was not made was not the fault of the student.

(ii) An institution may not make a second or subsequent late disbursement of a loan under the FFEL or Direct Loan programs unless the student successfully completed the period of enrollment for which the loan was intended.

(iii) An institution may not make a late disbursement of a loan under the FFEL or Direct Loan programs if the student was a first-year, first-time borrower unless the student completed the first 30 days of his or her program of study. This limitation does not apply if the institution is exempt from the 30-day delayed disbursement requirements under § 682.604(c)(5)(i), (ii), or (iii) or § 685.303(b)(4)(i)(A), (B), or (C).

16. Section 668.165(a)(3) is revised to read as follows:

§ 668.165 Notices and authorizations.

(a) * * *

(3) The institution must send the notice described in paragraph (a)(2) of this section in writing no earlier than 30 days before, and no later than 30 days after, crediting the student's account at the institution.

* * * * *

§ 668.171 [Amended]

17. Section 668.171(b) is amended by:

A. Removing ''refunds'' and adding, in its place ''returns of unearned title IV HEA program funds'' in paragraph (b)(2).

B. Removing ''and the payment of post-withdrawal disbursements under § 668.22'' in paragraph (b)(4)(i).

18. Section 668.173 is amended by:

A. Revising paragraphs (a) through (c).

B. Redesignating paragraph (d) as (f).

C. Adding new paragraphs (d) and (e).

The revisions and additions read as follows:

§ 668.173 Refund reserve standards.

(a) *General.* The Secretary considers that an institution has sufficient cash

reserves, as required under § 668.171(b)(2), if the institution—

(1) Satisfies the requirements for a public institution under § 668.171(c)(1);

(2) Is located in a State that has a tuition recovery fund approved by the Secretary and the institution contributes to that fund; or

(3) Returns, in a timely manner as described in paragraph (b) of this section, unearned title IV, HEA program funds that it is responsible for returning under the provisions of § 668.22 for a student that withdrew from the institution.

(b) *Timely return of title IV, HEA program funds.* In accordance with procedures established by the Secretary or FFEL Program lender, an institution returns unearned title IV, HEA funds timely if—

(1) The institution deposits or transfers the funds into the bank account it maintains under § 668.163 no later than 30 days after the date it determines that the student withdrew;

(2) The institution initiates an electronic funds transfer (EFT) no later than 30 days after the date it determines that the student withdrew;

(3) The institution initiates an electronic transaction, no later than 30 days after the date it determines that the student withdrew, that informs an FFEL lender to adjust the borrower's loan account for the amount returned; or

(4) The institution issues a check no later than 30 days after the date it determines that the student withdrew. However, the Secretary considers that the institution did not satisfy this requirement if—

(i) The institution's records show that the check was issued more than 30 days after the date the institution determined that the student withdrew; or

(ii) The date on the cancelled check shows that the Secretary or FFEL Program lender received that check more than 45 days after the date the institution determined that the student withdrew.

(c) *Compliance thresholds.* (1) An institution does not comply with the reserve standard under § 668.173(a)(3) if, in a compliance audit conducted under § 668.23, an audit conducted by the Office of the Inspector General, or a program review conducted by the Department or guaranty agency, the auditor or reviewer finds—

(i) In the sample of student records audited or reviewed that the institution did not return unearned title IV, HEA program funds within the timeframes described in paragraph (b) of this section for 5% or more of the students in the sample (For purposes of determining this percentage, the sample includes only students for whom the institution was required to return unearned funds during its most recently completed fiscal year.); or

(ii) A material weakness or reportable condition in the institution's report on internal controls relating to the return of unearned title IV, HEA program funds.

(2) The Secretary does not consider an institution to be out of compliance with the reserve standard under § 668.173(a)(3) if the institution is cited in any audit or review report because it did not return unearned funds in timely manner for one or two students, or for less the 5% of the students in the sample referred to in paragraph (c)(1)(i) of this section.

(d) *Letter of credit.* (1) Except as provided under paragraph (e)(1) of this section, an institution that can satisfy the reserve standard only under paragraph (a)(3) of this section, must submit an irrevocable letter of credit acceptable and payable to the Secretary if a finding in an audit or review shows that the institution exceeded the compliance thresholds in paragraph (c) of this section (i.e., the institution did not return unearned funds for 5% or more of its students) for either of its two most recently completed fiscal years.

(2) The amount of the letter of credit required under paragraph (d)(1) of this section is 25 percent of the total amount of unearned title IV, HEA program funds that the institution was required to return under § 668.22 during the institution's most recently completed fiscal year.

(3) An institution that is subject to paragraph (d)(1) of this section must submit to the Secretary a letter of credit no later than 30 days after the earlier of the date that—

(i) The institution is required to submit its compliance audit;

(ii) The Office of the Inspector General, issues a final audit report;

(iii) The designated department official issues a final program review determination;

(iv) The Department, through a program review report or draft audit report, or a guaranty agency issues a preliminary report showing that the institution did not return unearned funds for 10% or more of the sampled students; or

(v) The Secretary sends a written notice to the institution requesting the letter of credit that explains why the institution has failed to return unearned funds in a timely manner.

(e) *Exceptions.* With regard to the letter of credit described in paragraph (d) of this section—

(1) An institution does not have to submit the letter of credit if the amount calculated under paragraph (d)(2) of this section is less than $5,000 and the institution can demonstrate that it has cash reserves of at least $5,000 available at all times.

(2) An institution may delay submitting the letter of credit and request the Secretary to reconsider a finding made in its most recent audit or review report that it failed to return unearned title IV, HEA program funds in a timely manner if—

(i)(A) The institution submits documents showing that the unearned title IV, HEA program funds were not returned in a timely manner solely because of exceptional circumstances beyond the institution's control and that the institution would not have exceeded the compliance thresholds under paragraph (c)(1) of this section had it not been for these exceptional circumstances; or

(B) The institution submits documents showing that it did not fail to make timely refunds as provided under paragraphs (b) and (c) of this section;

(ii) The institution's request, along with the documents described in paragraph (e)(2)(i) of this section, are submitted to the Secretary no later than the date it would otherwise be required to submit a letter of credit under paragraph (d)(3).

(3) If the Secretary denies the institution's request under paragraph (e)(2) of this section, the Secretary notifies the institution of the date it must submit the letter of credit.

* * * * *

19. Section 668.174(c)(4) is revised to read as follows:

§ 668.174 Past performance.

* * * * *

(c) * * *

(4) ''Family member'' is defined in § 600.21(f).

PART 673—GENERAL PROVISIONS FOR THE FEDERAL PERKINS LOAN PROGRAM, FEDERAL WORK-STUDY PROGRAM, AND FEDERAL SUPPLEMENTAL EDUCATIONAL OPPORTUNITY GRANT PROGRAM

20. The authority citation for part 673 continues to read as follows:

Authority: 20 U.S.C. 421–429, 1070b–1070b–3, and 1087aa–1087ii; 42 U.S.C. 2751–2756b, unless otherwise noted.

21. Section 673.5(f) is revised to read as follows:

§ 673.5 Overaward.

* * * * *

(f) *Liability for and recovery of Federal Perkins loans and FSEOG*

overpayments. (1) Except as provided in paragraphs (f)(2) and (f)(3) of this section, a student is liable for any Federal Perkins loan or FSEOG overpayment made to him or her. An FSEOG overpayment for purposes of this paragraph (f) does not include the non-Federal share of an FSEOG award if an institution meets its FSEOG matching share by the individual recipient method or the aggregate method.

(2) The institution is liable for a Federal Perkins loan or FSEOG overpayment if the overpayment occurred because the institution failed to follow the procedures in this part or 34 CFR parts 668, 674, or 676. The institution shall restore an amount equal to the overpayment and any administrative cost allowance claimed on that amount to its loan fund for a Federal Perkins loan overpayment or to its FSEOG account for an FSEOG overpayment.

(3) A student is not liable for, and the institution is not required to attempt recovery of, a Federal Perkins loan or FSEOG overpayment, nor is the institution required to refer an FSEOG overpayment to the Secretary, if the overpayment—

(i) Is less than $25, and

(ii) Is neither a remaining balance nor a result of the application of the overaward threshold in paragraph (d) of this section.

(4)(i) Except as provided in paragraph (f)(3) of this section, if an institution makes a Federal Perkins loan or FSEOG overpayment for which it is not liable, it shall promptly send a written notice to the student requesting repayment of the overpayment amount. The notice must state that failure to make that repayment, or to make arrangements satisfactory to the holder of the overpayment debt to pay the overpayment, makes the student ineligible for further title IV aid until final resolution of the overpayment.

(ii) If a student objects to the institution's Federal Perkins loan or FSEOG overpayment determination on the grounds that it is erroneous, the institution shall consider any information provided by the student and determine whether the objection is warranted.

(5) Except as provided in paragraph (f)(3) of this section, if a student fails to repay an FSEOG overpayment, or make arrangements satisfactory to the holder of the overpayment debt to repay the FSEOG overpayment, after the institution has taken the action required by paragraph (f)(4) of this section, the institution must refer the FSEOG overpayment to the Secretary for collection purposes, in accordance with procedures required by the Secretary. After referring the FSEOG overpayment to the Secretary under this section, the institution need make no further effort to recover the overpayment.

PART 675—FEDERAL WORK-STUDY PROGRAMS

22. The authority citation for part 675 continues to read as follows:

Authority: 42 U.S.C. 2751–2756b, unless otherwise noted.

23. Section 675.2(b) is amended by revising the definition of ''Student services'' to read as follows:

§ 675.2 Definitions.

* * * * *

(b) * * *

Student services: Services that are offered to students that may include, but are not limited to, financial aid, library, peer guidance counseling, job placement, assisting an instructor with curriculum-related activities, security, and social, health, and tutorial services. Student services do not have to be direct or involve personal interaction with students. For purposes of this definition, facility maintenance, cleaning, purchasing, and public relations are never considered student services.

* * * * *

24. Section 675.21(b)(2)(i) is revised to read as follows:

§ 675.21 Institutional employment.

* * * * *

(b) * * *

(2) * * *

(i) Involve the provision of student services as defined in § 675.2(b) that are directly related to the work-study student's training or education;

* * * * *

PART 682—FEDERAL FAMILY EDUCATION LOAN (FFEL) PROGRAM

25. The authority citation for part 682 continues to read as follows:

Authority: 20 U.S.C. 1071 to 1087–2, unless otherwise noted.

§ 682.204 [Amended]

26. Section 682.204(l) is revised by changing ''34 CFR 668.2'' to ''34 CFR 668.3''.

§ 682.603 [Amended]

27. Sections 682.603(f)(1)(ii)(B) and (f)(2)(i) are amended by removing ''34 CFR 668.2'' and adding, in its place ''34 CFR 668.3''.

PART 685—WILLIAM D. FORD FEDERAL DIRECT LOAN PROGRAM

28. The authority citation for part 685 continues to read as follows:

Authority: 20 U.S.C. 1087a *et seq.*, unless otherwise noted.

§ 685.203 [Amended]

29. Section 685.203(h) is amended by adding '', as defined in 34 CFR 668.3'' after ''year''.

§ 685.301 [Amended]

30. Sections 685.301(a)(9)(i)(B)(*2*) and (a)(9)(ii)(A) are amended by removing ''34 CFR 668.2'' and adding, in its place ''34 CFR 668.3''.

PART 690—FEDERAL PELL GRANT PROGRAM

31. The authority citation for part 690 continues to read as follows:

Authority: 20 U.S.C. 1070a, unless otherwise noted.

32. Section 690.75(a) is revised to read as follows:

§ 690.75 Determination of eligibility for payment.

(a) For each payment period, an institution may pay a Federal Pell Grant to an eligible student only after it determines that the student—

(1) Qualifies as an eligible student under 34 CFR part 668, subpart C;

(2) Is enrolled in an eligible program as an undergraduate student; and

(3) If enrolled in a credit hour program without terms or a clock hour program, has completed the payment period as defined in § 668.4 for which he or she has been paid a Federal Pell Grant.

* * * * *

33. Section 690.79 is revised to read as follows:

§ 690.79 Liability for and recovery of Federal Pell Grant overpayments.

(a)(1) Except as provided in paragraphs (a)(2) and (a)(3) of this section, a student is liable for any Federal Pell Grant overpayment made to him or her.

(2) The institution is liable for a Federal Pell Grant overpayment if the overpayment occurred because the institution failed to follow the procedures set forth in this part or 34 CFR Part 668. The institution must restore an amount equal to the overpayment to its Federal Pell Grant account.

(3) A student is not liable for, and the institution is not required to attempt recovery of or refer to the Secretary, a Federal Pell Grant overpayment if the

amount of the overpayment is less than $25 and is not a remaining balance.

(b)(1) Except as provided in paragraph (a)(3) of this section, if an institution makes a Federal Pell Grant overpayment for which it is not liable, it must promptly send a written notice to the student requesting repayment of the overpayment amount. The notice must state that failure to make that repayment, or to make arrangements satisfactory to the holder of the overpayment debt to repay the overpayment, makes the student ineligible for further title IV aid until final resolution of the Federal Pell Grant overpayment.

(2) If a student objects to the institution's Federal Pell Grant overpayment determination on the grounds that it is erroneous, the institution must consider any information provided by the student and determine whether the objection is warranted.

(c) Except as provided in paragraph (a)(3) of this section, if the student fails to repay a Federal Pell Grant overpayment, or make arrangements satisfactory to the holder of the overpayment debt to repay the Federal Pell Grant overpayment, after the institution has taken the action required by paragraph (b) of this section, the institution must refer the overpayment to the Secretary for collection purposes, in accordance with procedures required by the Secretary. After referring the Federal Pell Grant overpayment to the Secretary under this section, the institution need make no further efforts to recover the overpayment.

(Authority: 20 U.S.C. 1070a)

PART 694—GAINING EARLY AWARENESS AND READINESS FOR UNDERGRADUATE PROGRAMS (GEAR UP)

34. The authority citation for part 694 continues to read as follows:

Authority: 20 U.S.C. 1070a–21 to 1070a–28.

35. Section 694.10(e) is revised to read as follows:

§ 694.10 What are the requirements for awards under the program's scholarship component under section 404E of the HEA?

* * * * *

(e) *Other grant assistance.* A GEAR UP scholarship may not be considered in the determination of a student's eligibility for other grant assistance provided under title IV of the HEA.

[FR Doc. 02–20058 Filed 8–7–02; 8:45 am]

BILLING CODE 4000–01–P

Federal Register

Thursday,
August 8, 2002

Part VI

Department of Education

National Institute on Disability and Rehabilitation Research; Notice

DEPARTMENT OF EDUCATION

National Institute on Disability and Rehabilitation Research

AGENCY: Office of Special Education and Rehabilitative Services, Department of Education.

ACTION: Notice of proposed priority.

SUMMARY: The Assistant Secretary for Special Education and Rehabilitative Services proposes a priority for Alternative Financing Program Technical Assistance (AFPTA) under title III of the Assistive Technology Act of 1998 (AT Act), which is administered by the National Institute on Disability and Rehabilitation Research (NIDRR). The Assistant Secretary may use this priority for competitions in fiscal year (FY) 2002 and later years. We take this action to focus attention on an identified national need. We intend this priority to provide information and technical assistance to States and outlying areas participating or interested in participating in the AFP.

DATES: We must receive your comments on or before September 9, 2002.

ADDRESSES: Address all comments about this proposed priority to Donna Nangle, Department of Education, 400 Maryland Avenue, SW., room 3412, Switzer Building, Washington, DC 20202–2645. If you prefer to send your comments through the Internet, use the following address: *donna.nangle@ed.gov.*

FOR FURTHER INFORMATION CONTACT: Donna Nangle. Telephone: (202) 205–5880 or via the Internet: *donna.nangle@ed.gov.* If you use a telecommunications device for the deaf (TDD), you may call the TDD number at (202) 205–4475.

Individuals with disabilities may obtain this document in an alternative format (e.g., Braille, large print, audiotape, or computer diskette) on request to the contact person listed under **FOR FURTHER INFORMATION CONTACT**.

SUPPLEMENTARY INFORMATION:

Invitation To Comment

We invite you to submit comments regarding this proposed priority.

We invite you to assist us in complying with the specific requirements of Executive Order 12866 and its overall requirement of reducing regulatory burden that might result from this proposed priority. Please let us know of any further opportunities we should take to reduce potential costs or increase potential benefits while preserving the effective and efficient administration of the program.

During and after the comment period, you may inspect all public comments about this priority in room 3412, Switzer Building, 330 C Street, SW., Washington, DC, between the hours of 8:30 a.m. and 4 p.m., Eastern time, Monday through Friday of each week except Federal holidays.

Assistance to Individuals With Disabilities in Reviewing the Rulemaking Record

On request, we will supply an appropriate aid, such as a reader or print magnifier, to an individual with a disability who needs assistance to review the comments or other documents in the public rulemaking record for this proposed priority. If you want to schedule an appointment for this type of aid, please contact the person listed under **FOR FURTHER INFORMATION CONTACT**.

Alternative Financing Program Technical Assistance Program (AFPTA)

Title III of the AT Act established an Alternative Financing Program (AFP), which pays part of the cost for the States and outlying areas to establish or maintain alternative financing projects to increase access to assistive technology (AT) for individuals with disabilities. The purpose of the AFPTA is to provide information and technical assistance to States and outlying areas participating in the AFP. Public or private agencies and organizations, including institutions of higher education, are the entities eligible for an AFPTA grant award.

This priority reflects issues discussed in the New Freedom Initiative (NFI) and NIDRR's Long-Range Plan (the Plan). The NFI can be accessed on the Internet at: *http://www.whitehouse.gov/news/freedominitiative/freedominiative.html.* The Plan can be accessed on the Internet at: *http://www.ed.gov/offices/OSERS/NIDRR/Products.*

We will announce the final priority in a notice in the **Federal Register**. We will determine the final priority after considering responses to this notice and other information available to the Department. This notice does not preclude us from proposing or funding additional priorities, subject to meeting applicable rulemaking requirements.

Note: This notice does *not* solicit applications. In any year in which we choose to use this proposed priority, we invite applications through a notice in the **Federal Register**. When inviting applications, we designate the priority as absolute, competitive preference, or invitational. The effect of each priority follows:

Absolute priority: Under an absolute priority, we consider only applications that meet the priority (34 CFR 75.105(c)(3)).

Competitive preference priority: Under a competitive preference priority, we give competitive preference to an application by either (1) awarding additional points, depending on how well or the extent to which the application meets the priority (34 CFR 75.105(c)(2)(i)); or (2) selecting an application that meets the priority over an application of comparable merit that does not meet the priority (34 CFR 75.105(c)(2)(ii)).

Invitational priority: Under an invitational priority, we are particularly interested in applications that meet the invitational priority. However, we do not give an application that meets the priority a competitive or absolute preference over other applications (34 CFR 75.105(c)(1)).

Priority

Background

We are particularly interested in applications that propose ways to collect, analyze, compile and report data provided by the AFP projects.

You may obtain additional information about the background of this priority by contacting the person listed under **FOR FURTHER INFORMATION CONTACT**.

Statutory Priority

As required by section 306(a) of the AT Act, the AFPTA project must:

(a) Provide assistance to States preparing applications for the AFP;

(b) Assist States to develop and implement the AFP; and

(c) Provide any other information and TA the Assistant Secretary determines to be appropriate to assist States to achieve the objectives of AFP.

Proposed Priority

In addition to the statutory priority, NIDRR is particularly interested in having the AFPTA collect, analyze, compile, and report data provided by the AFP projects. AFP projects currently report data using an instrument that was developed and implemented to assist the State grantees with their data collection obligations. NIDRR will provide this instrument to the grantee upon receipt of award. The AFPTA must:

(1) Collect data from the AFP projects and assist the projects in this effort;

(2) Propose strategies for reviewing the AFP data collection instrument to determine what modifications should be made to improve its usability, reliability and validity and suggest strategies to facilitate and expedite the collection of

uniform annual data from the AFP projects;

(3) Provide technical assistance to the State grantees on the data collection instrument that will support and improve the data collection efforts of the States;

(4) Provide technical assistance and training to State grantees on data collection strategies that will improve the quality of the data collected; and

(5) Through the technical assistance activities conducted under this priority, the project shall prepare a report on the activities funded under this Title. The report shall include the following: (a) the type of alternative financing mechanisms used by each State and the community-based organization with which each State entered into a contract, under the program; and (b) the amount of assistance given to consumers through the program who shall be classified by age, type of disability, type of assistive technology device or assistive technology service financed through the program, geographic distribution within the State, gender, and whether the consumers are part of an underrepresented population or rural population and, includes an executive summary, description of data collection procedures utilized and an analysis of the aggregated States' data including a discussion of trends.

Electronic Access to This Document

You may review this document, as well as all other Department of Education documents published in the **Federal Register**, in text or Adobe Portable Document Format (PDF) on the Internet at the following site: *www.ed.gov/legislation/FedRegister*.

To use PDF you must have Adobe Acrobat Reader, which is available free at this site. If you have questions about using PDF, call the U.S. Government Printing Office (GPO), toll free, at 1–888–293–6498; or in the Washington, DC, area at (202) 512–1530.

Note: The official version of this document is the document published in the **Federal Register**. Free Internet access to the official edition of the **Federal Register** and the Code of Federal Regulations is available on GPO access at: *http://www.access.gpo.gov/nara/index.html*.

(Catalog of Federal Domestic Assistance Number 84.224C, Alternative Financing Program.)

Program Authority: 29 U.S.C. 3056.

Dated: August 5, 2002.

Robert H. Pasternack,

Assistant Secretary for Special Education and, Rehabilitative Services.

[FR Doc. 02–20065 Filed 8–7–02; 8:45 am]

BILLING CODE 4000–01–P

Federal Register

Thursday,
August 8, 2002

Part VII

Department of Education

Office of Special Education and Rehabilitative Services, Office of Special Education Programs; Final Priority Under the State Improvement Grant Program; Notice Inviting Applications for New Awards for Fiscal Year 2002; Notices

DEPARTMENT OF EDUCATION

Office of Special Education Programs; Final Priority Under the State Improvement Grant Program

AGENCY: Office of Special Education And Rehabilitative Services, Department of Education.

ACTION: Notice of final priority.

SUMMARY: The Assistant Secretary for Special Education and Rehabilitative Services announces a priority under the State Program Improvement Grant Program administered by the Office of Special Education and Rehabilitative Services (OSERS) under the Individuals with Disabilities Education Act (IDEA), as amended. The Assistant Secretary may use this priority for competitions in fiscal year 2002 and in later years. We take this action to focus Federal financial assistance on identified needs to improve results for children with disabilities. The priority is intended to ensure wide and effective use of program funds.

EFFECTIVE DATE: This priority is effective September 9, 2002.

FOR FURTHER INFORMATION CONTACT: Larry Wexler, U.S. Department of Education, 400 Maryland Avenue, SW., room 3630, Switzer Building, Washington, DC 20202–2641. Telephone: (202) 205–5390. FAX: (202) 205–9179 or via Internet: *Larry.Wexler@ed.gov*

If you use a telecommunications device for the deaf (TDD), you may call the Federal Information Relay Service (FIRS) at 1–800–877–8339.

Individuals with disabilities may obtain a copy of this document in an alternative format (*e.g.,* Braille, large print, audiotape, or computer diskette) on request to the contact person listed under **FOR FURTHER INFORMATION CONTACT.**

SUPPLEMENTARY INFORMATION: We published a notice of proposed priority for this program in the **Federal Register** on June 18, 2002 (67 FR 41586).

Except for minor editorial and technical revisions, there are no differences between the notice of proposed priority and this notice of final priority.

Public Comment

In the notice of proposed priority, we invited comments on the proposed priority. We did not receive any substantive comments. However, we have made a change in the second paragraph under (d) on page 41587, to clarify that the awards are not new projects but are supplements to existing projects.

Note: This notice does *not* solicit applications. In any year in which we choose to use this priority, we invite applications through a notice in the **Federal Register**. When inviting applications we designate the priority as absolute, competitive preference, or invitational. The effect of each type of priority follows:

Absolute priority: Under an absolute priority we consider only applications that meet the priority (34 CFR 75.105(c)(3)).

Competitive preference priority: Under a competitive preference priority we give competitive preference to an application by either (1) awarding additional points, depending on how well or the extent to which the application meets the priority (34 CFR 75.105(c)(2)(i)); or (2) selecting an application that meets the priority over an application of comparable merit that does not meet the priority (34 CFR 75.105(c)(2)(ii)).

Invitational priority: Under an invitational priority we are particularly interested in applications that meet the invitational priority. However, we do not give an application that meets the priority a competitive or absolute preference over other applications (34 CFR 75. 105(c)(1)).

Priority

Competitive Supplement to State Program Improvement Grants

Background

There are currently 36 State educational agencies that are funded under the State Program Improvement Grant program. These grants are meant to improve results for children with disabilities by addressing personnel training needs of States, as identified by the States, and have been an example of the Department's continuing effort to improve educational opportunities for all children. Congress established the State Program Improvement Grant program when it reauthorized IDEA in 1997. The money helps State educational agencies reform their systems for providing educational, early intervention and transitional services for children with disabilities. It also supports technical assistance for local schools and dissemination of knowledge about best practices. Seventy-five percent of each grant must be used for professional development.

As part of the competition, each State, in conjunction with required partners, including local education agencies and other State agencies that provide special education services (at its option the State may also include other partners such as the Governor, parents of children with disabilities, organizations representing individuals with disabilities and their parents, the lead State agency for part C IDEA, institutions of higher education within the State, etc.), submitted improvement plans focused on such areas as: (1) Training and personnel; (2) recruitment and retention of special education, related services and early intervention staff; (3) performance of children with disabilities; and (4) improving overall program effectiveness. The States receiving the grants have used the funds to implement the improvement strategies that they proposed in their plans. The Secretary anticipates that there will be additional fiscal year 2001 funds available subsequent to making awards under this year's competition. To utilize additional funds that may become available, the Secretary is conducting a separate competition under which only grantees from the FY 1999, 2000 and 2001 competitions would be eligible.

Priority

The Secretary has established a priority to award competitive supplements to State Improvement Grants awarded in 1999, 2000, or 2001 for the purpose of enhancing current grant activities. Applicants must describe additional activities that augment or complement those goals and activities that are already being implemented as part of their State Improvement Grant. Enhancement activities may be simply an expansion of activities already described in the narrative or they may be new activities that will improve the quality of the previously approved State improvement grant tasks. The Secretary is particularly interested in activities that focus on: (1) Retention and recruitment of highly qualified personnel; (2) the use of research-based reading intervention strategies; and (3) the use of research-based positive behavior supports.

Projects must—

(a) Enhance only those State Improvement Grant activities that can be shown, based on the project's data-based evaluation, to have impacted positively on the goal(s) of the project;

(b) Incorporate the expanded or new activities into the project's ongoing evaluation activities;

(c) Incorporate the expanded or new activities into the project's existing partnership agreements; and

(d) Ensure that the State uses not less than 75 percent of the funds (existing budget plus any supplemental funds) it receives under the grant for any fiscal year on professional development and training of regular education, special education, or related services personnel.

Only 50 percent of the funds must be used on professional development if the State can demonstrate to the Department that it has sufficient personnel.

Under this priority, the Secretary will make, based on available funds, up to 36 supplements.

Intergovernmental Review

This program is subject to the requirements of Executive Order 12372 and the regulations in 34 CFR part 79. One of the objectives of the Executive order is to foster an intergovernmental partnership and a strengthened federalism. The Executive order relies on processes developed by State and local governments for coordination and review of proposed Federal financial assistance.

This document provides early notification of our specific plans and actions for this program.

Electronic Access to This Document

You may view this document, as well as all other Department of Education documents published in the **Federal Register**, in text or Adobe Portable Document Format (PDF) on the Internet at either of the following site: *http://www.ed.gov/legislation/FedRegister*

To use PDF you must have Adobe Acrobat Reader, which is available free at this site. If you have questions about using PDF, call the U.S. Government Printing Office (GPO), toll free, at 1–888–293–6498; or in the Washington, DC, area at (202) 512–1530.

Note: The official version of this document is the document published in the **Federal Register**. Free Internet access to the official edition of the **Federal Register** and the Code of Federal Regulations is available on GPO access at: *http://www.access.gpo. gov/nara/index.html*

(Catalog of Federal Domestic Assistance Number: State Program Improvement Grants Program, 84.323A)

Program Authority: 20 U.S.C. 1405, 1461, 1472, 1474, and 1487.

Dated: August 5, 2002

Robert H. Pasternack,

Assistant Secretary for Special Education and Rehabilitative Services.

[FR Doc. 02–20119 Filed 8–7–02; 8:45 am]

BILLING CODE 4000–01–P

DEPARTMENT OF EDUCATION

[CFDA No. 84.323]

Office of Special Education and Rehabilitative Services, Office of Special Education Programs—State Program Improvement Grant Program; Notice Inviting Applications for New Awards for Fiscal Year 2002

Purpose of Program: The purpose of the State Program Improvement Grant program is to assist State educational agencies and their partners referred to in section 652(b) of IDEA with reforming and improving their systems for providing educational, early intervention, and transitional services, including their systems for professional development, technical assistance, and dissemination of knowledge about best practices, to improve results for children with disabilities.

Eligible Applicants: State educational agencies with currently funded State Improvement Grants.

Applications Available: August 8, 2002.

Deadline for Transmittal of Applications: September 9, 2002.

Deadline for Intergovernmental Review: September 19, 2002.

Estimated Available Funds: $8,000,000.

Estimated Number of Awards: Under this priority, the Secretary will make, based on available funds, up to 36 supplements.

Estimated Size of Awards: State educational agencies with currently funded State Improvement grants may apply for up to 10 percent of the five-year total of their existing awards.

Page Limit

Part III of each application, the application narrative, is where an applicant addresses the selection criteria that are used by reviewers in evaluating the application. You must limit Part III to the equivalent of no more than 25 pages, using the following standards:

- A ''page'' is 8.5″ × 11″ (on one side only) with one-inch margins (top, bottom, and sides).
- Double-space (no more than three lines per vertical inch) all text in the application narrative, including titles, headings, footnotes, quotations, and captions, as well as all text in charts, tables, figures, and graphs.
- Use a font that is either 12-point or larger or no smaller than 10 pitch (characters per inch).

The page limit does not apply to Part I, the cover sheet; Part II, the budget section, including the narrative budget justification; Part IV, the assurances and certifications; or the one-page abstract, the resumes, the bibliography or references, or the letters of support. However, you must include all of the application narrative in Part III.

We will reject any application if—

- You apply these standards and exceed the page limit; or
- You apply other standards and exceed the equivalent of the page limit.

Applicable Regulations: (a) The Education Department General Administrative Regulations (EDGAR) in 34 CFR parts 74, 75, 77, 79, 80, 81, 82, 85, 86, 97, 98, and 99; and (b) The regulations for this program in 34 CFR part 304; and (c) The selection criteria chosen from the general selection criteria in 34 CFR 75.210. The specific selection criteria for this priority are included in the application package for this competition.

Priority

For FY 2002 this priority is an absolute priority. Under 34 CFR 75.105(c)(3) we consider only applications that meet the priority.

This competition focuses on projects designed to meet a priority in the notice of final priority for this program, published elsewhere in this issue of the **Federal Register**.

FOR APPLICATION INFORMATION CONTACT: For this priority under the Special Education—State Program Improvement Grant Program, contact Larry Wexler, U.S. Department of Education, 400 Maryland Avenue, SW., Room 3630, Switzer Building, Washington, DC 20202–2641. Telephone: (202) 205–5390. FAX: (202) 205–9179 or via Internet: *Larry.Wexler@ed.gov.*

If you use a telecommunications device for the deaf (TDD), you may call the Federal Information Relay Service (FIRS) at 1–800–877–8339.

Individuals with disabilities may obtain a copy of this document in an alternative format (e.g., Braille, large print, audiotape, or computer diskette) on request to the contact person listed under **FOR APPLICATION INFORMATION CONTACT.**

Electronic Access to This Document

You may view this document, as well as all other Department of Education documents published in the **Federal Register**, in text or Adobe Portable Document Format (PDF) on the Internet at either of the following site: *http://www.ed.gov/legislation/FedRegister.*

To use PDF you must have Adobe Acrobat Reader, which is available free at this site. If you have questions about using PDF, call the U.S. Government Printing Office (GPO), toll free, at 1–

888–293–6498; or in the Washington, DC, area at (202) 512–1530.

Note: The official version of this document is the document published in the **Federal Register**. Free Internet access to the official edition of the **Federal Register** and the Code of Federal Regulations is available on GPO access at: *http://www.access.gpo.gov/nara/index.html.*

Program Authority: 20 U.S.C. 1405, 1461, 1472, 1474, and 1487.

Dated: August 5, 2002.

Robert H. Pasternack,

Assistant Secretary for Special Education and Rehabilitative Services.

[FR Doc. 02–20120 Filed 8–7–02; 8:45 am]

BILLING CODE 4000–01–P

Reader Aids

Federal Register

Vol. 67, No. 153

Thursday, August 8, 2002

CUSTOMER SERVICE AND INFORMATION

Federal Register/Code of Federal Regulations	
General Information, indexes and other finding aids	**202–523–5227**
Laws	**523–5227**
Presidential Documents	
Executive orders and proclamations	**523–5227**
The United States Government Manual	**523–5227**
Other Services	
Electronic and on-line services (voice)	**523–3447**
Privacy Act Compilation	**523–3187**
Public Laws Update Service (numbers, dates, etc.)	**523–6641**
TTY for the deaf-and-hard-of-hearing	**523–5229**

ELECTRONIC RESEARCH

World Wide Web

Full text of the daily Federal Register, CFR and other publications is located at: **http://www.access.gpo.gov/nara**

Federal Register information and research tools, including Public Inspection List, indexes, and links to GPO Access are located at: **http://www.nara.gov/fedreg**

E-mail

FEDREGTOC-L (Federal Register Table of Contents LISTSERV) is an open e-mail service that provides subscribers with a digital form of the Federal Register Table of Contents. The digital form of the Federal Register Table of Contents includes HTML and PDF links to the full text of each document.

To join or leave, go to **http://listserv.access.gpo.gov** and select *Online mailing list archives, FEDREGTOC-L, Join or leave the list (or change settings);* then follow the instructions.

PENS (Public Law Electronic Notification Service) is an e-mail service that notifies subscribers of recently enacted laws.

To subscribe, go to **http://hydra.gsa.gov/archives/publaws-l.html** and select *Join or leave the list* (or change settings); then follow the instructions.

FEDREGTOC-L and **PENS** are mailing lists only. We cannot respond to specific inquiries.

Reference questions. Send questions and comments about the Federal Register system to: **info@fedreg.nara.gov**

The Federal Register staff cannot interpret specific documents or regulations.

FEDERAL REGISTER PAGES AND DATE, AUGUST

49855–50342 1
50343–50580 2
50581–50790 5
50791–51064 6
51065–51458 7
51459–51750 8

CFR PARTS AFFECTED DURING AUGUST

At the end of each month, the Office of the Federal Register publishes separately a List of CFR Sections Affected (LSA), which lists parts and sections affected by documents published since the revision date of each title.

3 CFR

Executive Orders:
12722 (See Notice of July 30, 2002) 50341
12724 (See Notice of July 30, 2002) 50341
Administrative Orders:
Notices:
Notice of July 30, 2002 50341
Presidential Determinations:
No. 2002–26 of July 17, 2002 50343

5 CFR

532 (2 documents) 49855
2634.....49856
Proposed Rules:
532 (2 documents) 49878, 49879

7 CFR

301.....51459
735.....50778
736.....50778
737.....50778
738.....50778
739.....50778
740.....50778
741.....50778
742.....50778
928.....50581
930.....51700
1160.....49857
Proposed Rules:
701.....49879
1001.....49887

9 CFR

77.....50791
Proposed Rules:
112.....49891
113.....49891, 50606

10 CFR

Proposed Rules:
7.....51501
50.....50374
52.....50374

11 CFR

100.....50582, 51131
104.....51131
105.....51131
114.....51131

13 CFR

Proposed Rules:
121.....50383

14 CFR

39 .....49858, 49859, 49861, 50345, 50347, 50764, 50791, 50793, 50799, 51065, 51068, 51069, 51459
71 .....51070, 51071, 51072, 51073, 51074
Proposed Rules:
39.....50383, 51147
71.....51149

15 CFR

774.....50348
902.....50292, 51074

17 CFR

Proposed Rules:
15.....50608
230.....50326
232.....51508
240.....50326, 51508
242.....51510
249.....51508

18 CFR

Proposed Rules:
2.....51516
101.....51150
201.....51150
352.....51150

19 CFR

Proposed Rules:
4.....51519
113.....51519

21 CFR

510 .....50802, 51079, 51080
520.....50596, 51080
529.....51079
558.....51080, 51081

22 CFR

41.....50349
196.....50802

24 CFR

903.....51030

25 CFR

Proposed Rules:
170.....51328

26 CFR

1.....49862
301.....49862
Proposed Rules:
1 .....49892, 50386, 50510, 50840
31.....50386
301.....50840

27 CFR

Proposed Rules:
9.....51156

28 CFR

79 51422
542 50804

Proposed Rules:

79 51440

29 CFR

Proposed Rules:

1910 51524
1926 50610

33 CFR

6 51082
117 50349
125 51082
165 ....50351, 51083

Proposed Rules:

Ch. I 50840
117 ....50842, 50842, 51157
155 51159
165 50846
334 ....50389, 50390
385 50340

34 CFR

Proposed Rules:

200 50986
600 51720
668 ....51036, 51720
673 51720
674 51036
675 51720
682 ....51036, 51720
685 ....51036, 51720
690 51720
694 51720

36 CFR

242 50597

Proposed Rules:

242 50619

39 CFR

927 50353

40 CFR

51 50600
52 ....50602, 51461
81 50805
86 51464
93 50808
180 ....50354, 51083, 51088, 51097, 51102
271 51478
272 49864

Proposed Rules:

51 51525
52 ....49895, 49897, 50391, 50847, 51527
85 51402
86 51402
122 51527
272 49900
300 51528
450 51527

42 CFR

405 49982
412 49982
413 49982
485 49982

Proposed Rules:

68d 50622

44 CFR

64 50817
65 50362

46 CFR

Proposed Rules:

221 50406

47 CFR

25 ....51105, 51110
54 50602
73 ....50603, 50819, 50820, 50821, 50822, 51115
100 51110

Proposed Rules:

73 ....50850, 50851, 50852

48 CFR

1804 50823
1813 50823
1815 50823
1819 50824
1825 50823
1852 50823

49 CFR

107 51626
171 51626
172 51626
173 51626
177 51626
178 51626
179 51626
180 51626
192 50824
1503 51480

50 CFR

17 51116
216 49869
622 ....50367, 51074
648 ....50292, 50368, 50604
660 ....49875, 50835
679 ....49877, 50604, 51129, 51130, 51499

Proposed Rules:

17 ....50626, 51530
100 50619
226 51530

REMINDERS

The items in this list were editorially compiled as an aid to Federal Register users. Inclusion or exclusion from this list has no legal significance.

RULES GOING INTO EFFECT AUGUST 8, 2002

CORPORATION FOR NATIONAL AND COMMUNITY SERVICE

AmeriCorps grant regulations; published 7-9-02

ENVIRONMENTAL PROTECTION AGENCY

Air pollution control; new motor vehicles and engines:
- Heavy-duty diesel engines and vehicles; 2004 and later model year emission standards; nonconformance penalties; published 8-8-02

Hazardous waste program authorizations:
- Delaware; published 8-8-02

FEDERAL COMMUNICATIONS COMMISSION

Common carrier services:
- International telecommunications services; biennial regulatory review; published 7-9-02

POSTAL SERVICE

Domestic Mail Manual:
- Free matter for blind and other physically disabled persons; eligibility standards; published 7-8-02

TRANSPORTATION DEPARTMENT

Federal Aviation Administration

Airworthiness directives:
- Empresa Brasileira de Aeronautica S.A. (EMBRAER); published 7-24-02

Class E airspace; published 3-11-02

Class E airspace; correction; published 3-15-02

Class E5 airspace; published 5-22-02

Federal airways; published 5-10-02

IFR altitudes; published 7-1-02

Jet routes; published 6-20-02

Jet routes and VOR Federal airways; published 4-17-02

Restricted areas; published 6-20-02

TRANSPORTATION DEPARTMENT

Transportation Security Administration

Practice and procedure:
- Investigative and enforcement procedures; published 8-8-02

COMMENTS DUE NEXT WEEK

AGRICULTURE DEPARTMENT

Agricultural Marketing Service

Milk marketing orders:
- Mideast; comments due by 8-12-02; published 6-11-02 [FR 02-14455]

Mushroom promotion, research, and consumer information order; comments due by 8-15-02; published 7-16-02 [FR 02-17764]

Specialty crops; import regulations:
- Raisins, Other-Seedless Sulfured; comments due by 8-13-02; published 6-14-02 [FR 02-15059]

AGRICULTURE DEPARTMENT

Animal and Plant Health Inspection Service

Plant-related quarantine, foreign:
- Gypsy moth host material from Canada; comments due by 8-13-02; published 6-14-02 [FR 02-15074]

Viruses, serums, toxins, etc.:
- Equine influenza vaccine, killed virus; comments due by 8-15-02; published 8-1-02 [FR 02-19422]

COMMERCE DEPARTMENT

National Oceanic and Atmospheric Administration

Endangered and threatened species:
- Findings on petitions, etc.—
  - Klamath River Basin coho salmon; comments due by 8-12-02; published 6-13-02 [FR 02-14959]

Fishery conservation and management:
- West Coast States and Western Pacific fisheries—
  - West Coast salmon; comments due by 8-16-02; published 8-1-02 [FR 02-19429]

DEFENSE DEPARTMENT

Civilian health and medical program of uniformed services (CHAMPUS):
- TRICARE program—
  - Sub-acute and long-term care program reform; comments due by 8-12-02; published 6-13-02 [FR 02-14707]

ENVIRONMENTAL PROTECTION AGENCY

Air pollutants, hazardous; national emission standards:
- Generic Maximum Achievable Control Technology—
  - Spandex production; comments due by 8-12-02; published 7-12-02 [FR 02-12842]
  - Spandex production; correction; comments due by 8-12-02; published 7-12-02 [FR 02-12843]
- Secondary aluminum production; comments due by 8-13-02; published 6-14-02 [FR 02-14627]

Air quality implementation plans; approval and promulgation; various States:
- California; comments due by 8-15-02; published 7-16-02 [FR 02-17696]
- Georgia; comments due by 8-12-02; published 7-11-02 [FR 02-17317]
- Tennessee; comments due by 8-15-02; published 7-16-02 [FR 02-17700]

Hazardous waste program authorizations:
- Georgia; comments due by 8-15-02; published 7-16-02 [FR 02-17694]

Hazardous waste:
- Cathode ray tubes and mercury-containing equipment; comments due by 8-12-02; published 6-12-02 [FR 02-13116]
- Identification and listing—
  - Exclusions; comments due by 8-12-02; published 7-12-02 [FR 02-17458]
- Municipal solid waste landfills; location restrictions for airport safety; comments due by 8-12-02; published 7-11-02 [FR 02-16994]

FEDERAL COMMUNICATIONS COMMISSION

Radio services special:
- Maritime services—
  - Global Maritime Distress and Safety System; comments due by 8-15-02; published 5-17-02 [FR 02-12430]

FEDERAL TRADE COMMISSION

Textile Fiber Products Identification Act; implementation:
- Lastol; comments due by 8-12-02; published 5-24-02 [FR 02-13151]

HEALTH AND HUMAN SERVICES DEPARTMENT

Food and Drug Administration

Medical devices:
- Dental devices—
  - Root-form endosseous dental implants and abutments; reclassification from Class III to Class II; comments due by 8-12-02; published 5-14-02 [FR 02-12041]

HOUSING AND URBAN DEVELOPMENT DEPARTMENT

Public and Indian housing:
- Native Hawaiian Housing Block Grant and Loan Guarantees for Native Hawaiian Housing Programs; comments due by 8-12-02; published 6-13-02 [FR 02-14721]

INTERIOR DEPARTMENT

Fish and Wildlife Service

Endangered and threatened species:
- Critical habitat designations—
  - Blackburn's sphinx moth; comments due by 8-12-02; published 6-13-02 [FR 02-14683]
  - Various plant species from Lanai, HI; comments due by 8-15-02; published 7-16-02 [FR 02-18016]

INTERIOR DEPARTMENT

Minerals Management Service

Outer Continental Shelf; oil, gas, and sulphur operations:
- Plans and information; comments due by 8-15-02; published 5-17-02 [FR 02-11641]

INTERIOR DEPARTMENT

Surface Mining Reclamation and Enforcement Office

Permanent program and abandoned mine land reclamation plan submissions:
- Kentucky; comments due by 8-14-02; published 7-15-02 [FR 02-17654]
- Montana; comments due by 8-14-02; published 7-15-02 [FR 02-17653]

PERSONNEL MANAGEMENT OFFICE

Prevailing rate systems; comments due by 8-16-02; published 7-17-02 [FR 02-17900]

RAILROAD RETIREMENT BOARD

Railroad Retirement Act:

Retirement age; definition; comments due by 8-16-02; published 6-17-02 [FR 02-15104]

SMALL BUSINESS ADMINISTRATION

Small business size standards:
Nonmanufacturer rule; waivers—
Small arms ammunition manufacturing; comments due by 8-16-02; published 8-2-02 [FR 02-19472]

SOCIAL SECURITY ADMINISTRATION

Social security benefits and supplemental security income:
Federal old-age, survivors, and disability benefits, and aged, blind, and disabled—
Residual functional capacity assessments and vocational experts and other sources use, clarifications; special profile incorporation into regulations; comments due by 8-12-02; published 6-11-02 [FR 02-13901]

TRANSPORTATION DEPARTMENT

Coast Guard

Ports and waterways safety:
East River, Manhattan, NY; safety zone; comments due by 8-16-02; published 7-26-02 [FR 02-18921]
Houston-Galveston Captain of Port Zone, TX; security zones; comments due by 8-12-02; published 6-11-02 [FR 02-14560]
Houston and Galveston Ports, TX; security zones; comments due by 8-12-02; published 6-11-02 [FR 02-14562]
Lower Mississippi River, New Orleans, LA; security zones; comments due by 8-12-02; published 6-11-02 [FR 02-14557]
St. Louis Captain of Port Zone, MO; security zones; comments due by 8-12-02; published 6-11-02 [FR 02-14556]

TRANSPORTATION DEPARTMENT

Federal Aviation Administration

Air traffic operating and flight rules, etc.:
Noise operating limits; transition to all Stage 3 fleet operating in 48 contiguous United States and District of Columbia; comments due by 8-14-02; published 7-15-02 [FR 02-17744]

Airworthiness directives:
Airbus; comments due by 8-16-02; published 7-17-02 [FR 02-18027]
Boeing; comments due by 8-12-02; published 6-28-02 [FR 02-16310]
Boeing and McDonnell Douglas; comments due by 8-12-02; published 6-26-02 [FR 02-15661]
CFM International; comments due by 8-12-02; published 6-13-02 [FR 02-14856]
Eurocopter France; comments due by 8-12-02; published 6-12-02 [FR 02-14568]
General Electric; comments due by 8-12-02; published 6-13-02 [FR 02-14857]
General Electric Co.; comments due by 8-12-02; published 6-12-02 [FR 02-14700]
SOCATA-Groupe AEROSPATIALE; comments due by 8-14-02; published 7-12-02 [FR 02-17600]

Airworthiness standards:
Special conditions—
Eclipse Aviation Corp. Model 500 airplane; comments due by 8-16-02; published 7-17-02 [FR 02-18017]
New Piper Aircraft Corp., PA 34-200T, Seneca V airplanes; comments due by 8-16-02; published 7-17-02 [FR 02-18018]

Class E airspace; comments due by 8-15-02; published 8-7-02 [FR 02-19677]

TRANSPORTATION DEPARTMENT

Federal Motor Carrier Safety Administration

Hazardous materials transportation; driving and parking rules:
Motor carriers transporting hazardous materials; periodic tire check requirement; comments due by 8-15-02; published 7-16-02 [FR 02-17898]

TRANSPORTATION DEPARTMENT

Maritime Administration

Vessel financing assistance:
Deposit funds; establishment and administration; comments due by 8-12-02; published 6-12-02 [FR 02-14823]

TREASURY DEPARTMENT

Internal Revenue Service

Excise taxes:
Diesel fuel; blended taxable fuel; comments due by 8-14-02; published 5-16-02 [FR 02-12308]

Income taxes:
Gross proceeds payments to attorneys; reporting requirements; comments due by 8-15-02; published 5-17-02 [FR 02-12464]

TREASURY DEPARTMENT

Thrift Supervision Office

Savings associations; fiduciary powers; and securities transactions; recordkeeping and confirmation requirements; comments due by 8-12-02; published 6-11-02 [FR 02-14317]

VETERANS AFFAIRS DEPARTMENT

Board of Veterans Appeals:
Appeals regulations and rules of practice—
Aging veterans; speeding appellate review process; comments due by 8-12-02; published 6-12-02 [FR 02-14685]

LIST OF PUBLIC LAWS

This is a continuing list of public bills from the current session of Congress which have become Federal laws. It may be used in conjunction with "P L U S" (Public Laws Update Service) on 202–523–6641. This list is also available online at *http://www.nara.gov/fedreg/plawcurr.html*.

The text of laws is not published in the **Federal Register** but may be ordered in "slip law" (individual pamphlet) form from the Superintendent of Documents, U.S. Government Printing Office, Washington, DC 20402 (phone, 202–512–1808). The text will also be made available on the Internet from GPO Access at *http://www.access.gpo.gov/nara/nara005.html*. Some laws may not yet be available.

H.R. 2175/P.L. 107–207

Born-Alive Infants Protection Act of 2002 (Aug. 5, 2002; 116 Stat. 926)

Last List August 6, 2002

Public Laws Electronic Notification Service (PENS)

PENS is a free electronic mail notification service of newly enacted public laws. To subscribe, go to *http://hydra.gsa.gov/archives/publaws-l.html* or send E-mail to **listserv@listserv.gsa.gov** with the following text message:

SUBSCRIBE PUBLAWS-L Your Name.

Note: This service is strictly for E-mail notification of new laws. The text of laws is not available through this service. **PENS** cannot respond to specific inquiries sent to this address.