AUTHENTICATED U.S. GOVERNMENT INFORMATION GPO

Federal Register

8–6–02 Tuesday
Vol. 67 No. 151 August 6, 2002
Pages 50791–51064

The **FEDERAL REGISTER** is published daily, Monday through Friday, except official holidays, by the Office of the Federal Register, National Archives and Records Administration, Washington, DC 20408, under the Federal Register Act (44 U.S.C. Ch. 15) and the regulations of the Administrative Committee of the Federal Register (1 CFR Ch. I). The Superintendent of Documents, U.S. Government Printing Office, Washington, DC 20402 is the exclusive distributor of the official edition.

The **Federal Register** provides a uniform system for making available to the public regulations and legal notices issued by Federal agencies. These include Presidential proclamations and Executive Orders, Federal agency documents having general applicability and legal effect, documents required to be published by act of Congress, and other Federal agency documents of public interest.

Documents are on file for public inspection in the Office of the Federal Register the day before they are published, unless the issuing agency requests earlier filing. For a list of documents currently on file for public inspection, see http://www.nara.gov/fedreg.

The seal of the National Archives and Records Administration authenticates the Federal Register as the official serial publication established under the Federal Register Act. Under 44 U.S.C. 1507, the contents of the **Federal Register** shall be judicially noticed.

The **Federal Register** is published in paper and on 24x microfiche. It is also available online at no charge as one of the databases on GPO Access, a service of the U.S. Government Printing Office.

The online edition of the **Federal Register** is issued under the authority of the Administrative Committee of the Federal Register as the official legal equivalent of the paper and microfiche editions (44 U.S.C. 4101 and 1 CFR 5.10). It is updated by 6 a.m. each day the **Federal Register** is published and it includes both text and graphics from Volume 59, Number 1 (January 2, 1994) forward.

GPO Access users can choose to retrieve online **Federal Register** documents as TEXT (ASCII text, graphics omitted), PDF (Adobe Portable Document Format, including full text and all graphics), or SUMMARY (abbreviated text) files. Users should carefully check retrieved material to ensure that documents were properly downloaded.

On the World Wide Web, connect to the **Federal Register** at http://www.access.gpo.gov/nara. Those without World Wide Web access can also connect with a local WAIS client, by Telnet to swais.access.gpo.gov, or by dialing (202) 512–1661 with a computer and modem. When using Telnet or modem, type swais, then log in as guest with no password.

For more information about GPO Access, contact the GPO Access User Support Team by E-mail at gpoaccess@gpo.gov; by fax at (202) 512–1262; or call (202) 512–1530 or 1–888–293–6498 (toll free) between 7 a.m. and 5 p.m. Eastern time, Monday–Friday, except Federal holidays.

The annual subscription price for the **Federal Register** paper edition is $699, or $764 for a combined **Federal Register, Federal Register** Index and List of CFR Sections Affected (LSA) subscription; the microfiche edition of the **Federal Register** including the **Federal Register** Index and LSA is $264. Six month subscriptions are available for one-half the annual rate. The charge for individual copies in paper form is $10.00 for each issue, or $10.00 for each group of pages as actually bound; or $2.00 for each issue in microfiche form. All prices include regular domestic postage and handling. International customers please add 25% for foreign handling. Remit check or money order, made payable to the Superintendent of Documents, or charge to your GPO Deposit Account, VISA, MasterCard or Discover. Mail to: New Orders, Superintendent of Documents, P.O. Box 371954, Pittsburgh, PA 15250–7954.

There are no restrictions on the republication of material appearing in the **Federal Register.**

How To Cite This Publication: Use the volume number and the page number. Example: 67 FR 12345.

SUBSCRIPTIONS AND COPIES

PUBLIC

Subscriptions:

Paper or fiche	**202–512–1800**
Assistance with public subscriptions	**202–512–1806**

General online information **202–512–1530; 1–888–293–6498**

Single copies/back copies:

Paper or fiche	**202–512–1800**
Assistance with public single copies	**1–866–512–1800 (Toll-Free)**

FEDERAL AGENCIES

Subscriptions:

Paper or fiche	**202–523–5243**
Assistance with Federal agency subscriptions	**202–523–5243**

What's NEW!

Federal Register Table of Contents via e-mail

Subscribe to FEDREGTOC, to receive the **Federal Register** Table of Contents in your e-mail every day.

If you get the HTML version, you can click directly to any document in the issue.

To subscribe, go to **http://listserv.access.gpo.gov** and select:

Online mailing list archives
FEDREGTOC-L
Join or leave the list

Then follow the instructions.

FEDERAL REGISTER WORKSHOP

THE FEDERAL REGISTER: WHAT IT IS AND HOW TO USE IT

FOR: Any person who uses the **Federal Register** and Code of Federal Regulations.

WHO: Sponsored by the Office of the Federal Register.

WHAT: Free public briefings (approximately 3 hours) to present:

1. The regulatory process, with a focus on the Federal Register system and the public's role in the development of regulations.
2. The relationship between the **Federal Register** and Code of Federal Regulations.
3. The important elements of typical **Federal Register** documents.
4. An introduction to the finding aids of the FR/CFR system.

WHY: To provide the public with access to information necessary to research Federal agency regulations which directly affect them. There will be no discussion of specific agency regulations.

WASHINGTON, DC

WHEN: September 24, 2002—9:00 a.m. to noon

WHERE: Office of the Federal Register
Conference Room
800 North Capitol Street, NW.
Washington, DC
(3 blocks north of Union Station Metro)

RESERVATIONS: 202–523–4538; or
info@fedreg.nara.gov

Printed on recycled paper.

Contents

Federal Register

Vol. 67, No. 151

Tuesday, August 6, 2002

Agency for Toxic Substances and Disease Registry
NOTICES
Meetings:
Scientific Counselors Board, 50891

Agricultural Marketing Service
NOTICES
Agricultural products marketing; testing and process verification services, 50853–50854

Agriculture Department
See Agricultural Marketing Service
See Animal and Plant Health Inspection Service
See Forest Service
See Grain Inspection, Packers and Stockyards Administration

Animal and Plant Health Inspection Service
RULES
Interstate transportation of animals and animal products (quarantine):
Tuberculosis in cattle and bison—
State and area classifications, 50791

Antitrust Division
NOTICES
National cooperative research notifications:
Financial Services Technology Consortium, Inc., 50898–50899
Southwest Research Institute, 50899

Centers for Disease Control and Prevention
NOTICES
Agency information collection activities:
Reporting and recordkeeping requirements, 51057–51064
Grants and cooperative agreements; availability, etc.:
Human immunodeficiency virus (HIV)—
Zimbabwe; support for civil society organizations, 50891–50892
Meetings:
Disease, Disability, and Injury Prevention and Control Special Emphasis Panels, 50892

Civil Rights Commission
NOTICES
Meetings; State advisory committees:
Arizona, 50855
Florida, 50855

Coast Guard
PROPOSED RULES
Boating safety regulations review, 50840–50841
Drawbridge operations:
Delaware, 50844–50846
Florida, 50842–50844
Ports and waterways safety:
Boston Harbor, MA; regulated navigation area; withdrawn, 50846
NOTICES
Meetings:
Commercial Fishing Industry Vessel Advisory Committee; correction, 50975
Reports and guidance documents; availability, etc.:
Merchant mariners; demonstrations of proficiency as mate (pilot) of towing vessels; assessment guidelines, 50975–50976

Commerce Department
See International Trade Administration
See National Oceanic and Atmospheric Administration
NOTICES
Agency information collection activities:
Submission for OMB review; comment request, 50856

Drug Enforcement Administration
NOTICES
Applications, hearings, determinations, etc.:
Penick Corp., 50899
Roxane Laboratories, Inc., 50899
Stepan Co., 50899–50900

Education Department
PROPOSED RULES
Elementary and secondary education:
Improving academic achievement of disadvantaged children; administration of Title 1 programs, 50985–51027
Postsecondary education:
Student Assistance General Provisions and Federal Perkins Loan, Federal Family Education Loan, and William D. Ford Direct Loan Programs, 51035–51056
NOTICES
Agency information collection activities:
Proposed collection; comment request, 50875
Proposed collection; comment request; correction, 50875

Employment and Training Administration
NOTICES
Adjustment assistance:
Volunteer Knit Apparel et al., 50942–50943
NAFTA transitional adjustment assistance:
Topsail Electronics et al., 50943–50945

Energy Department
See Federal Energy Regulatory Commission

Environmental Protection Agency
RULES
Air programs:
Michigan; transportation conformity; initial SIP submissions 18-month requirement and newly designated nonattainment areas grace period, 50808–50817
Air quality planning purposes; designation of areas:
California, 50805–50808
PROPOSED RULES
Air quality implementation plans; approval and promulgation; various States:
California, 50847–50850
NOTICES
Air pollution control:
State operating permits programs—
New York, 50878–50879

Water supply:
Safe Drinking Water Act—
Michigan; non-transient non-community water systems; lead and copper; alternative treatment technique, 50880

Federal Aviation Administration
RULES
Airworthiness directives:
Bell, 50793–50799
Honeywell, 50799–50802
MD Helicopters, Inc., 50791–50792
NOTICES
Exemption petitions; summary and disposition, 50976–50977
Passenger facility charges; applications, etc.:
Salt Lake City International Airport, UT, 50977–50978
Worland Municipal Airport, WY, 50978

Federal Communications Commission
RULES
Radio stations; table of assignments:
California, 50821–50822
Georgia, 50820–50821
Kentucky, 50819
Nebraska, 50821
Texas, 50819–50823
PROPOSED RULES
Radio stations; table of assignments:
California, 50851–50852
Michigan; withdrawn, 50852
Texas, 50850–50851
Vermont, 50850–50851

Federal Emergency Management Agency
RULES
Flood insurance; communities eligible for sale:
Various States, 50817–50819
NOTICES
Agency information collection activities:
Proposed collection; comment request, 50880–50888
Disaster and emergency areas:
Guam, 50889
Micronesia, 50889
Texas, 50889
Vermont, 50889–50890
Grants and cooperative agreements; availability, etc.:
Pre-Disaster Mitigation Program, 50890–50891

Federal Energy Regulatory Commission
NOTICES
Hydroelectric applications, 50876–50878
Applications, hearings, determinations, etc.:
El Dorado Irrigation District, 50876
New England Coalition On Nuclear Pollution et al., 50876

Federal Highway Administration
NOTICES
Agency information collection activities:
Proposed collection; comment request, 50978–50979

Federal Reserve System
NOTICES
Meetings; Sunshine Act, 50891

Food and Drug Administration
RULES
Animal drugs, feeds, and related products:
Sponsor name and address changes—
Endo Pharmaceuticals, Inc., 50802

Forest Service
NOTICES
Environmental statements; notice of intent:
Tonto National Forest, AZ, 50854
Meetings:
Resource Advisory Committees—
Tuolumne County, 50854–50855

Grain Inspection, Packers and Stockyards Administration
NOTICES
Agricultural products marketing; testing and process verification services, 50853–50854

Health and Human Services Department
See Agency for Toxic Substances and Disease Registry
See Centers for Disease Control and Prevention
See Food and Drug Administration
See Indian Health Service

Housing and Urban Development Department
RULES
Public and Indian housing:
Public housing agency plans—
Poverty deconcentration; Established Income Range definition; amendments, 51029–51033

Immigration and Naturalization Service
NOTICES
Agency information collection activities:
Submission for OMB review; comment request, 50900–50901

Indian Health Service
NOTICES
Agency information collection activities:
Proposed collection; comment request, 50892–50893

Interior Department
See Land Management Bureau
See Minerals Management Service
See National Park Service
NOTICES
Grants and cooperative agreements; availability, etc.:
Gulf Ecosystem Monitoring and Research Program, 50893

Internal Revenue Service
PROPOSED RULES
Income taxes:
Cost recovery (deductions) under income forecast method of depreciation; guidance
Correction, 50840
Qualified tuition and related expenses; information reporting, including magnetic filing requirements for information returns
Hearing cancellation, 50840

International Trade Administration
NOTICES
Antidumping:
Fresh tomatoes from—
Mexico, 50858–50860
Freshwater crawfish tail meat from—
China, 50860–50862

Honey from—
China, 50862
In-shell raw pistachios from—
Iran, 50863–50865
Non-malleable cast iron pipe fittings from—
China, 50866
Persulfates from—
China, 50866–50869
Sebacic acid from—
China, 50870–50874
Antidumping and countervailing duties:
Administrative review requests, 50856–50858

International Trade Commission
NOTICES
Import investigations:
Stainless steel plate from—
Various countries, 50897–50898

Justice Department
See Antitrust Division
See Drug Enforcement Administration
See Immigration and Naturalization Service
See Prisons Bureau

Labor Department
See Employment and Training Administration
NOTICES
Agency information collection activities:
Submission for OMB review; comment request, 50901
Grants and cooperative agreements; availability, etc.:
China Labor Rule of Law Program, 50901–50915
China mine safety improvement program, 50916–50928
Philippines and Pakistan; economic opportunity and income security expansion through workforce education, skills training, employment creation, etc., 50929–50941

Land Management Bureau
NOTICES
Public land orders:
Alaska, 50894
Montana, 50894
Washington, 50894–50895

Minerals Management Service
NOTICES
Agency information collection activities:
Proposed collection; comment request, 50895–50896

National Aeronautics and Space Administration
RULES
Acquisition regulations:
Balance of Payments Program; miscellaneous changes, 50823–50824
Small Business Competitiveness Demonstration Program, 50824

National Archives and Records Administration
NOTICES
Reports and guidance documents; availability, etc.:
Federal records management; redesign initiatives, 50945–50946

National Highway Traffic Safety Administration
NOTICES
Motor vehicle safety standards:
Nonconforming vehicles—
Importation eligiblity; determinations, 50979–50981
Motor vehicle theft prevention standard:
Bromer, Nicholas; rulemaking petition denied, 50981–50982

National Oceanic and Atmospheric Administration
RULES
Fishery conservation and management:
West Coast States and Western Pacific fisheries—
Sablefish, 50835–50839
NOTICES
Permits:
Marine mammals, 50874–50875

National Park Service
NOTICES
National Register of Historic Places:
Pending nominations, 50897

National Science Foundation
NOTICES
Meetings; Sunshine Act, 50946

Nuclear Regulatory Commission
NOTICES
Meetings; Sunshine Act, 50947
Operating licenses, amendments; no significant hazards considerations; biweekly notices, 50947–50965
Applications, hearings, determinations, etc.:
Nuclear Management Co., LLC, 50946

Prisons Bureau
RULES
Inmate control, custody, care, etc.:
Administrative Remedy Program; excluded matters, 50804–50805

Public Health Service
See Agency for Toxic Substances and Disease Registry
See Centers for Disease Control and Prevention
See Food and Drug Administration
See Indian Health Service

Research and Special Programs Administration
RULES
Pipeline safety:
Hazardous liquid transportation—
Gas transmission pipelines; integrity management in high consequence areas, 50824–50835

Securities and Exchange Commission
NOTICES
Investment Company Act of 1940:
Exemption applications—
American United Life Insurance Co. et al., 50965–50972
Self-regulatory organizations; proposed rule changes:
New York Stock Exchange, Inc., 50972–50973

State Department
RULES
Grants:
Thomas R. Pickering Foreign Affairs/Graduate Foreign Affairs Fellowship Program, 50802–50804
NOTICES
Art objects; importation for exhibition:
Magna Graecia: Greek Art from South Italy and Sicily, 50973
Foreign passports validity; list of countries, 50973–50974

Grants and cooperative agreements; availability, etc.:
U.S.-Egypt Science and Technology Program, 50974–50975

Surface Transportation Board
NOTICES
Railroad operation, acquisition, construction, etc.:
CSX Transportation, Inc., 50982–50983
R.J. Corman Equipment Co., LLC, 50983

Toxic Substances and Disease Registry Agency
See Agency for Toxic Substances and Disease Registry

Transportation Department
See Coast Guard
See Federal Aviation Administration
See Federal Highway Administration
See National Highway Traffic Safety Administration
See Research and Special Programs Administration
See Surface Transportation Board

Treasury Department
See Internal Revenue Service

Separate Parts In This Issue

Part II
Education Department, 50985–51027

Part III
Housing and Urban Development Department, 51029–51033

Part IV
Education Department, 51035–51056

Part V
Public Health Service, Centers for Disease Control and Prevention, 51057–51064

Reader Aids
Consult the Reader Aids section at the end of this issue for phone numbers, online resources, finding aids, reminders, and notice of recently enacted public laws.

To subscribe to the Federal Register Table of Contents LISTSERV electronic mailing list, go to http://listserv.access.gpo.gov and select Online mailing list archives, FEDREGTOC-L, Join or leave the list (or change settings); then follow the instructions.

CFR PARTS AFFECTED IN THIS ISSUE

A cumulative list of the parts affected this month can be found in the Reader Aids section at the end of this issue.

9 CFR
77 50791

14 CFR
39 (3 documents) 50791, 50793, 50799

21 CFR
510 50802

22 CFR
196 50802

24 CFR
903 51030

26 CFR

Proposed Rules:
1 (2 documents) 50840
301 50840

28 CFR
542 50804

33 CFR

Proposed Rules:
Ch. I 50840
117 (2 documents) 50842, 50844
165 50846

34 CFR

Proposed Rules:
200 50986
668 51036
674 51036
682 51036
685 51036

40 CFR
81 50805
93 50808

Proposed Rules:
52 50847

44 CFR
64 50817

47 CFR
73 (10 documents) 50819, 50820, 50821, 50822

Proposed Rules:
73 (5 documents) 50850, 50851, 50852

48 CFR
1804 50823
1813 50823
1815 50823
1819 50824
1825 50823
1852 50823

49 CFR
192 50824

50 CFR
660 50835

Rules and Regulations

Federal Register

Vol. 67, No. 151

Tuesday, August 6, 2002

This section of the FEDERAL REGISTER contains regulatory documents having general applicability and legal effect, most of which are keyed to and codified in the Code of Federal Regulations, which is published under 50 titles pursuant to 44 U.S.C. 1510.

The Code of Federal Regulations is sold by the Superintendent of Documents. Prices of new books are listed in the first FEDERAL REGISTER issue of each week.

DEPARTMENT OF AGRICULTURE

Animal and Plant Health Inspection Service

9 CFR Part 77

[Docket No. 02–021–2]

Tuberculosis in Cattle and Bison; State and Zone Designations; Texas

AGENCY: Animal and Plant Health Inspection Service, USDA.

ACTION: Notice of reopening and extension of comment period.

SUMMARY: We are reopening and extending the comment period for an interim rule that amended the bovine tuberculosis regulations regarding State and zone classifications by removing the split-State status of Texas and classifying the entire State as modified accredited advanced. The interim rule also solicited comments on the current regulatory provisions of the domestic bovine tuberculosis eradication program. This action will allow interested persons additional time to prepare and submit comments.

DATES: We will consider all comments that we receive on or before September 5, 2002.

ADDRESSES: You may submit comments by postal mail/commercial delivery or by e-mail. If you use postal mail/commercial delivery, please send four copies of your comment (an original and three copies) to: Docket No. 02–021–1, Regulatory Analysis and Development, PPD, APHIS, Station 3C71, 4700 River Road Unit 118, Riverdale, MD 20737–1238. Please state that your comment refers to Docket No. 02–021–1. If you use e-mail, address your comment to *regulations@aphis.usda.gov.* Your comment must be contained in the body of your message; do not send attached files. Please include your name and address in your message and ''Docket No. 02–021–1'' on the subject line.

You may read any comments that we receive on Docket No. 02–021–1 in our reading room. The reading room is located in room 1141 of the USDA South Building, 14th Street and Independence Avenue SW., Washington, DC. Normal reading room hours are 8 a.m. to 4:30 p.m., Monday through Friday, except holidays. To be sure someone is there to help you, please call (202) 690–2817 before coming.

APHIS documents published in the **Federal Register**, and related information, including the names of organizations and individuals who have commented on APHIS dockets, are available on the Internet at *http://www.aphis.usda.gov/ppd/rad/webrepor.html.*

FOR FURTHER INFORMATION CONTACT: Dr. Joseph Van Tiem, Senior Staff Veterinarian, National Animal Health Programs, VS, APHIS, 4700 River Road Unit 43, Riverdale, MD 20737–1231; (301) 734–7716.

SUPPLEMENTARY INFORMATION:

Background

On June 6, 2002, we published an interim rule in the **Federal Register** (67 FR 38841–38844, Docket No. 02–021–1). In that document, we amended the bovine tuberculosis regulations regarding State and zone classifications by removing the split-State status of Texas and classifying the entire State as modified accredited advanced. In addition to requesting comments on the change in the tuberculosis classification status of Texas, we requested comments on the current regulatory provisions of the domestic bovine tuberculosis eradication program.

Comments were required to be received or postmarked by August 5, 2002. Based on requests received during the comment period, we are reopening and extending the comment period for Docket 02–021–1 until September 5, 2002. This action will allow interested persons additional time to prepare and submit comments.

Authority: 7 U.S.C. 8301–8317; 7 CFR 2.22, 2.80, and 371.4.

Done in Washington, DC, this 31st day of July, 2002.

Peter Fernandez,

Acting Administrator, Animal and Plant Health Inspection Service.

[FR Doc. 02–19769 Filed 8–5–02; 8:45 am]

BILLING CODE 3410–34–P

DEPARTMENT OF TRANSPORTATION

Federal Aviation Administration

14 CFR Part 39

[Docket No. 2001–SW–25–AD; Amendment 39–12837; AD 2002–15–07]

RIN 2120–AA64

Airworthiness Directives; MD Helicopters, Inc., Model MD900 Helicopters

AGENCY: Federal Aviation Administration, DOT.

ACTION: Final rule.

SUMMARY: This amendment adopts a new airworthiness directive (AD) for MD Helicopters, Inc., Model MD900 helicopters that requires, for the lateral-mixer bellcrank assembly (bellcrank), establishing a life limit, creating a component history card or equivalent record, determining the hours time-in-service (TIS), and applying a serial number (S/N). This amendment is prompted by additional testing that revealed that the original load test to establish the life limits of the bellcrank did not accurately represent the actual loading. The actions specified by this AD are intended to prevent fatigue failure of the bellcrank and subsequent loss of lateral control of the helicopter.

DATES: Effective September 10, 2002.

The incorporation by reference of certain publications listed in the regulations is approved by the Director of the Federal Register as of September 10, 2002.

ADDRESSES: The service information referenced in this AD may be obtained from MD Helicopters Inc., Attn: Customer Support Division, 4555 E. McDowell Rd., Mail Stop M615–GO48, Mesa, Arizona 85215–9734, telephone 1–800–388–3378, fax 480–891–6782, or on the Web at *www.mdhelicopters.com.* This information may be examined at the FAA, Office of the Regional Counsel, Southwest Region, 2601 Meacham Blvd., Room 663, Fort Worth, Texas; or

at the Office of the Federal Register, 800 North Capitol Street, NW., suite 700, Washington, DC.

FOR FURTHER INFORMATION CONTACT: Jon Mowery, Aviation Safety Engineer, FAA, Los Angeles Aircraft Certification Office, Airframe Branch, 3960 Paramount Blvd., Lakewood, California 90712, telephone (562) 627–5322, fax (562) 627–5210.

SUPPLEMENTARY INFORMATION: A proposal to amend 14 CFR part 39 to include an AD for MD Helicopters, Inc. Model MD900 helicopters was published in the **Federal Register** on January 16, 2002 (67 FR 2145). That action proposed to require, before further flight, the following for the bellcrank on an affected helicopter:

- Create a component history card or equivalent record.
- Determine the hours TIS of the bellcrank.
- Apply a S/N.
- Remove any affected bellcrank that exceeds the life limit.

This AD would revise the Limitations section of the maintenance manual by establishing a life limit of 13,300 hours TIS for the bellcrank, P/N 900C2010203–105.

Interested persons have been afforded an opportunity to participate in the making of this amendment. No comments were received on the proposal or the FAA's determination of the cost to the public. The FAA has determined that air safety and the public interest require the adoption of the rule as proposed.

The FAA estimates that 30 helicopters of U.S. registry will be affected by this AD, that it will take approximately ½ work hour per helicopter to accomplish the required actions for the bellcrank, and that the average labor rate is $60 per work hour. Required parts will cost approximately $10,120 per helicopter. Based on these figures, the total cost impact of the AD on U.S. operators is estimated to be $304,500, assuming replacement of the bellcranks in all 30 helicopters.

The regulations adopted herein will not have a substantial direct effect on the States, on the relationship between the national Government and the States, or on the distribution of power and responsibilities among the various levels of government. Therefore, it is determined that this final rule does not have federalism implications under Executive Order 13132.

For the reasons discussed above, I certify that this action (1) is not a ''significant regulatory action'' under Executive Order 12866; (2) is not a ''significant rule'' under DOT Regulatory Policies and Procedures (44 FR 11034, February 26, 1979); and (3) will not have a significant economic impact, positive or negative, on a substantial number of small entities under the criteria of the Regulatory Flexibility Act. A final evaluation has been prepared for this action and it is contained in the Rules Docket. A copy of it may be obtained from the Rules Docket at the location provided under the caption **ADDRESSES**.

List of Subjects in 14 CFR Part 39

Air transportation, Aircraft, Aviation safety, Incorporation by reference, Safety.

Adoption of the Amendment

Accordingly, pursuant to the authority delegated to me by the Administrator, the Federal Aviation Administration amends part 39 of the Federal Aviation Regulations (14 CFR part 39) as follows:

PART 39—AIRWORTHINESS DIRECTIVES

1. The authority citation for part 39 continues to read as follows:

Authority: 49 U.S.C. 106(g), 40113, 44701.

§ 39.13 [Amended]

2. Section 39.13 is amended by adding a new airworthiness directive to read as follows:

2002–15–07 MD Helicopters, Inc.: Amendment 39–12837. Docket No. 2001–SW–25–AD.

Applicability: Model MD900 helicopters, serial number (S/N) 900–00008, 900–00010 through 900–00098, and 900–00100, with a lateral-mixer bellcrank assembly (bellcrank), part number (P/N) 900C2010203–105, installed, certificated in any category.

Note 1: This AD applies to each helicopter identified in the preceding applicability provision, regardless of whether it has been otherwise modified, altered, or repaired in the area subject to the requirements of this AD. For helicopters that have been modified, altered, or repaired so that the performance of the requirements of this AD is affected, the owner/operator must request approval for an alternative method of compliance in accordance with paragraph (e) of this AD. The request should include an assessment of the effect of the modification, alteration, or repair on the unsafe condition addressed by this AD; and if the unsafe condition has not been eliminated, the request should include specific proposed actions to address it.

Compliance: Before further flight, unless accomplished previously.

To prevent fatigue failure of the bellcrank and subsequent loss of lateral control of the helicopter, accomplish the following:

(a) Create a component history card or equivalent record for each bellcrank and record the hours time-in-service (TIS) of the bellcrank. If the hours TIS of the bellcrank cannot be determined, use the helicopter's total hours TIS as the hours TIS for the bellcrank.

(b) Apply a S/N to the bellcrank in accordance with the Accomplishment Instructions, paragraph (1)(a) and (1)(b), of MD Helicopters, Inc. Service Bulletin SB 900–084, dated December 3, 2001.

(c) Remove any bellcrank that has exceeded 13,300 hours TIS.

(d) This AD revises the Limitations section of the maintenance manual by establishing a life limit of 13,300 hours TIS for bellcrank, P/N 900C2010203–105.

(e) An alternative method of compliance or adjustment of the compliance time that provides an acceptable level of safety may be used if approved by the Manager, Los Angeles Aircraft Certification Office (LAACO), FAA. Operators shall submit their requests through an FAA Principal Maintenance Inspector, who may concur or comment and then send it to the Manager, LAACO.

Note 2: Information concerning the existence of approved alternative methods of compliance with this AD, if any, may be obtained from the LAACO.

(f) Special flight permits may be issued in accordance with 14 CFR 21.197 and 21.199 to operate the helicopter to a location where the requirements of this AD can be accomplished.

(g) The marking of the S/N shall be done in accordance with the Accomplishment Instructions, paragraphs (1)(a) and (1)(b), of MD Helicopters, Inc. Service Bulletin SB 900–084, dated December 3, 2001. This incorporation by reference was approved by the Director of the Federal Register in accordance with 5 U.S.C. 552(a) and 1 CFR part 51. Copies may be obtained from MD Helicopters Inc., Attn: Customer Support Division, 4555 E. McDowell Rd., Mail Stop M615–GO48, Mesa, Arizona 85215–9734, telephone 1–800–388–3378, fax 480–891–6782, or on the Web at *www.mdhelicopters.com*. Copies may be inspected at the FAA, Office of the Regional Counsel, Southwest Region, 2601 Meacham Blvd., Room 663, Fort Worth, Texas; or at the Office of the Federal Register, 800 North Capitol Street, NW., suite 700, Washington, DC.

(h) This amendment becomes effective on September 10, 2002.

Issued in Fort Worth, Texas, on July 24, 2002.

Eric Bries,

Acting Manager, Rotorcraft Directorate, Aircraft Certification Service.

[FR Doc. 02–19487 Filed 8–5–02; 8:45 am]

BILLING CODE 4910–13–P

DEPARTMENT OF TRANSPORTATION

Federal Aviation Administration

14 CFR Part 39

[Docket No. 2002–SW–22–AD; Amendment 39–12835; AD 2002–08–54]

RIN 2120–AA64

Airworthiness Directives; Bell Helicopter Textron Canada Model 222, 222B, 222U, and 230 Helicopters

AGENCY: Federal Aviation Administration, DOT.

ACTION: Final rule; request for comments.

SUMMARY: This document publishes in the **Federal Register** an amendment adopting Emergency Airworthiness Directive (EAD) 2002–08–54, which was sent previously to all known U.S. owners and operators of the specified Bell Helicopter Textron Canada (BHTC) model helicopters by individual letters. This AD requires a visual check of each main rotor grip assembly (grip) and pitch horn at specified intervals and a visual inspection using a 10-power or higher magnifying glass of each affected grip and pitch horn for a crack at specified intervals. If a crack is found, this AD requires replacing each unairworthy grip or pitch horn with an airworthy part before further flight. This AD is prompted by three reports each of a fatigue crack in the grip and pitch horn found during routine inspection of the rotor head. This condition, if not detected, could result in failure of the grip or pitch horn and subsequent loss of control of the helicopter.

DATES: Effective August 21, 2002, to all persons except those persons to whom it was made immediately effective by Emergency AD 2002–08–54, issued on May 2, 2002, which contained the requirements of this amendment.

The incorporation by reference of certain publications listed in the regulations is approved by the Director of the Federal Register as of August 21, 2002.

Comments for inclusion in the Rules Docket must be received on or before October 7, 2002.

ADDRESSES: Submit comments in triplicate to the Federal Aviation Administration (FAA), Office of the Regional Counsel, Southwest Region, Attention: Rules Docket No. 2002–SW–22–AD, 2601 Meacham Blvd., Room 663, Fort Worth, Texas 76137. You may also send comments electronically to the Rules Docket at the following address: *9-asw-adcomments@faa.gov.*

The applicable service information may be obtained from Bell Helicopter Textron Canada, 12,800 Rue de l'Avenir, Mirabel, Quebec J7J1R4, telephone (450) 437–2862 or (800) 363–8023, fax (450) 433–0272. This information may be examined at the FAA, Office of the Regional Counsel, Southwest Region, 2601 Meacham Blvd., Room 663, Fort Worth, Texas; or at the Office of the Federal Register, 800 North Capitol Street, NW., suite 700, Washington, DC.

FOR FURTHER INFORMATION CONTACT: Charles Harrison, Aviation Safety Engineer, FAA, Rotorcraft Directorate, Rotorcraft Standards Staff, Fort Worth, Texas 76193–0110, telephone (817) 222–5128, fax (817) 222–5961.

SUPPLEMENTARY INFORMATION: On May 2, 2002, the FAA issued EAD 2002–08–54, for the specified BHTC model helicopters, which requires visually checking and subsequently inspecting each affected grip and pitch horn for a crack at specified intervals. If a crack is found, the EAD requires replacing each unairworthy grip or pitch horn with an airworthy part before further flight. That action was prompted by three reports each of a fatigue crack in the grip and pitch horn found during routine inspection of the rotor head. When EAD 2002–08–54 was mailed to all known U.S. owners and operators of the specified model helicopters, two hidden text boxes were inadvertently shown in Figure 2. However, a correction to EAD 2002–08–54 was mailed on May 6, 2002, which removed the text boxes labeled ''Inspection Area'' and ''Grip Assembly'' from Figure 2.

The FAA has reviewed Bell Helicopter Textron Canada (BHTC) Alert Service Bulletin Nos. 222U–02–64, 222–02–93, and 230–02–26, all dated April 1, 2002, which describe procedures for checking and inspecting each grip and pitch horn with more than 1250 hours time-in-service since new for a crack.

Transport Canada, the airworthiness authority for Canada, notified the FAA that an unsafe condition may exist on these helicopter models. Transport Canada advises of the need for repeated daily checks and visual inspections at specified intervals of the grip and pitch horn for a crack until the cause of the premature failures is determined. Transport Canada classified these alert service bulletins as mandatory and issued AD No. CF–2002–23, dated April 2, 2002, to ensure the continued airworthiness of these helicopters.

These helicopter models are manufactured in Canada and are type certificated for operation in the United States under the provisions of 14 CFR 21.29 and the applicable bilateral agreement. Pursuant to the applicable bilateral agreement, Transport Canada has kept the FAA informed of the situation described above. The FAA has examined the findings of Transport Canada, reviewed all available information, and determined that AD action is necessary for products of these type designs that are certificated for operation in the United States.

This unsafe condition is likely to exist or develop on other helicopters of the same type designs. Therefore, the FAA issued EAD 2002–08–54 to prevent failure of the grip or pitch horn and subsequent loss of control of the helicopter. The AD requires, before further flight, and at specified intervals, visually checking each affected grip and pitch horn for a crack. The AD also requires using a 10-power or higher magnifying glass to visually inspect each affected grip and pitch horn for a crack at specified intervals. If a crack is found, this AD requires replacing each unairworthy grip or pitch horn with an airworthy part before further flight. The actions must be accomplished in accordance with the alert service bulletins described previously. The short compliance time involved is required because the previously described critical unsafe condition can adversely affect the controllability and structural integrity of the helicopter. Therefore, visually checking each affected grip and pitch horn for a crack and replacing any unairworthy part are required before further flight, and this AD must be issued immediately.

An owner/operator (pilot) may perform the visual check required by this AD. The pilot must enter compliance with paragraph (a) of this AD into the helicopter maintenance records in accordance with 14 CFR 43.11 and 91.417(a)(2)(v)). A pilot may perform this check because it involves only a visual check for a crack in the grip or pitch horn and can be performed equally well by a pilot or a mechanic.

Since it was found that immediate corrective action was required, notice and opportunity for prior public comment thereon were impracticable and contrary to the public interest, and good cause existed to make the AD effective immediately by individual letters issued on May 2, 2002, to all known U.S. owners and operators of BHTC Model 222, 222B, 222U, and 230 helicopters. These conditions still exist, and the AD is hereby published in the **Federal Register** as an amendment to 14 CFR 39.13 to make it effective to all persons. A minor editorial correction is made to add a colon at the end of paragraph (a)(3) of this AD. This change neither increases the economic burden

on any operator nor increases the scope of the AD.

The FAA estimates that 107 helicopters of U.S. registry will be affected by this AD, that it will take approximately 20.5 work hours per helicopter per year to accomplish the required actions, and that the average labor rate is $60 per work hour. Required parts will cost approximately $51,735 for one configuration and $22,504 for the other configuration if a crack is found. Based on these figures, the total cost impact of the AD on U.S. operators is estimated to be $131,610 assuming no cracked parts are found.

Comments Invited

Although this action is in the form of a final rule that involves requirements affecting flight safety and, thus, was not preceded by notice and an opportunity for public comment, comments are invited on this rule. Interested persons are invited to comment on this rule by submitting such written data, views, or arguments as they may desire. Communications should identify the Rules Docket number and be submitted in triplicate to the address specified under the caption **ADDRESSES.** All communications received on or before the closing date for comments will be considered, and this rule may be amended in light of the comments received. Factual information that supports the commenter's ideas and suggestions is extremely helpful in evaluating the effectiveness of the AD action and determining whether additional rulemaking action would be needed.

Comments are specifically invited on the overall regulatory, economic, environmental, and energy aspects of the rule that might suggest a need to modify the rule. All comments submitted will be available in the Rules Docket for examination by interested persons. A report that summarizes each FAA-public contact concerned with the substance of this AD will be filed in the Rules Docket.

Commenters wishing the FAA to acknowledge receipt of their mailed comments submitted in response to this rule must submit a self-addressed, stamped postcard on which the following statement is made: ''Comments to Docket No. 2002–SW–22–AD.'' The postcard will be date stamped and returned to the commenter.

The regulations adopted herein will not have a substantial direct effect on the States, on the relationship between the national Government and the States, or on the distribution of power and responsibilities among the various levels of government. Therefore, it is determined that this final rule does not have federalism implications under Executive Order 13132.

The FAA has determined that this regulation is an emergency regulation that must be issued immediately to correct an unsafe condition in aircraft, and that it is not a ''significant regulatory action'' under Executive Order 12866. It has been determined further that this action involves an emergency regulation under DOT Regulatory Policies and Procedures (44 FR 11034, February 26, 1979). If it is determined that this emergency regulation otherwise would be significant under DOT Regulatory Policies and Procedures, a final regulatory evaluation will be prepared and placed in the Rules Docket. A copy of it, if filed, may be obtained from the Rules Docket at the location provided under the caption **ADDRESSES.**

List of Subjects in 14 CFR Part 39

Air transportation, Aircraft, Aviation safety, Incorporation by reference, Safety.

Adoption of the Amendment

Accordingly, pursuant to the authority delegated to me by the Administrator, the Federal Aviation Administration amends part 39 of the Federal Aviation Regulations (14 CFR part 39) as follows:

PART 39—AIRWORTHINESS DIRECTIVES

1. The authority citation for part 39 continues to read as follows:

Authority: 49 U.S.C. 106(g), 40113, 44701.

§ 39.13 [Amended]

2. Section 39.13 is amended by adding a new airworthiness directive to read as follows:

2002–08–54 Bell Helicopter Textron Canada: Amendment 39–12835, Docket No. 2002–SW–22–AD.

Applicability: The following model helicopters with the listed part number (P/N) installed, certificated in any category:

Model	With hub assembly P/N	With grip assembly P/N	With pitch horn assembly P/N
(1) 222 or 222B	222–011–101–103, −105, −107, or −109	222–010–104–105	222–011–104–101
	222–012–101–103, or −107	222–012–104–101	222–012–102–101
(2) 222U	222–011–101–105, −107, or −109	222–010–104–105	222–011–104–101
	222–012–101–103, OR −107	222–012–104–101	222–012–102–101
(3)	222–012–101–105, or −109	222–012–104–101	222–012–102–101

Note 1: This AD applies to each helicopter identified in the preceding applicability provision, regardless of whether it has been otherwise modified, altered, or repaired in the area subject to the requirements of this AD. For helicopters that have been modified, altered, or repaired so that the performance of the requirements of this AD is affected, the owner/operator must request approval for an alternative method of compliance in accordance with paragraph (d) of this AD. The request should include an assessment of the effect of the modification, alteration, or repair on the unsafe condition addressed by this AD; and if the unsafe condition has not been eliminated, the request should include specific proposed actions to address it.

Compliance: Required as indicated, unless accomplished previously.

To prevent failure of the grip or pitch horn and subsequent loss of control of the helicopter, if either the grip or pitch horn has accumulated 1250 or more hours time-in-service (TIS) since initial installation on any helicopter, accomplish the following:

(a) Before further flight and thereafter at intervals not to exceed 8 hours TIS:

(1) Wipe clean the main rotor grip and pitch horn surfaces to remove grease and dirt in the check area as shown in Figure 1 of this AD:

BILLING CODE 4910–13–P

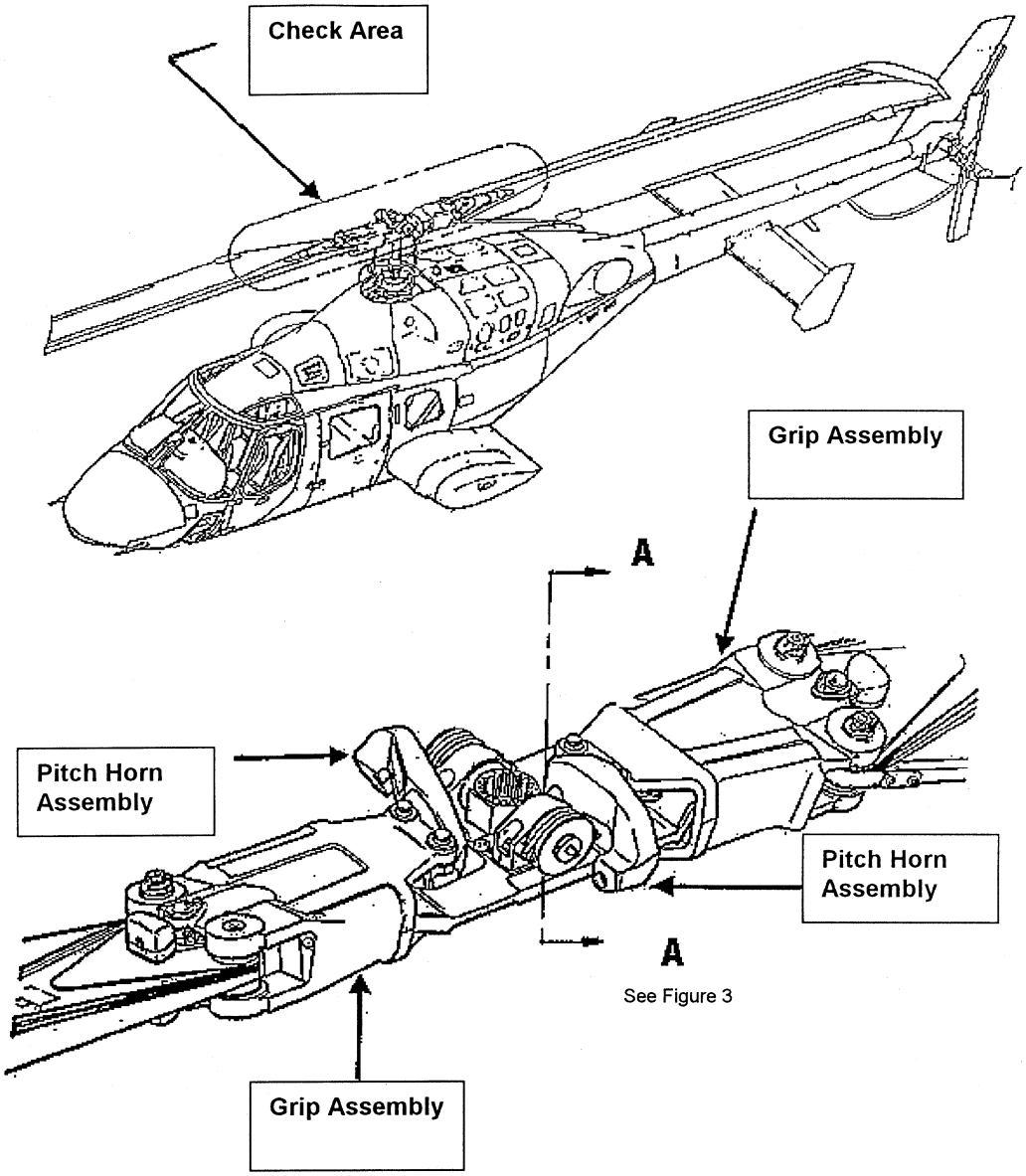

Figure 1

(2) Visually check both main rotor grips for a crack, paying particular attention to the inboard and outboard tangs/portions of the grip, which are in direct contact with the pitch horns and the main rotor blades. Check the area to at least 3 inches beyond the grip/pitch and grip/blade contact areas as shown in Figure 2 of this AD:

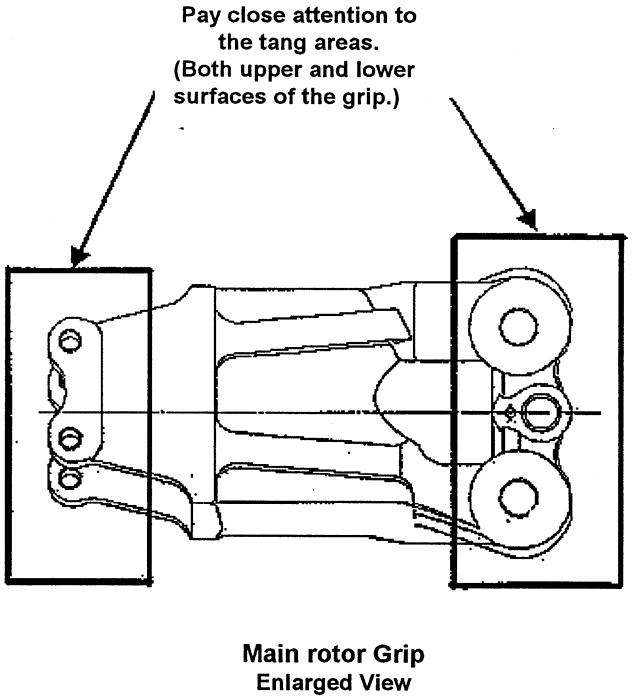

Figure 2

(3) Visually check all visible portions of each pitch horn for a crack. Pay particular attention to the attachment lugs of the pitch horns, which are in direct contact with the inboard tangs of the main rotor grips, as shown in Figure 3 of this AD, and the four large bolt cutouts, as shown in Figure 4 of this AD:

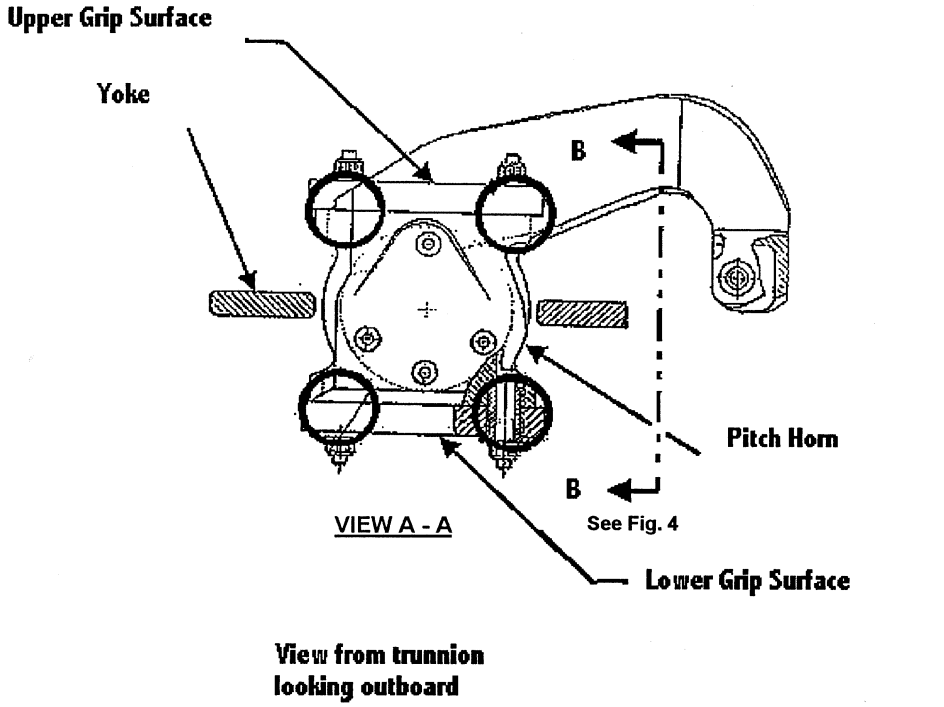

All visible portions of the pitch horn must be checked.
Pay particular attention to the circled areas shown above and View B-B, Fig. 4.

Figure 3

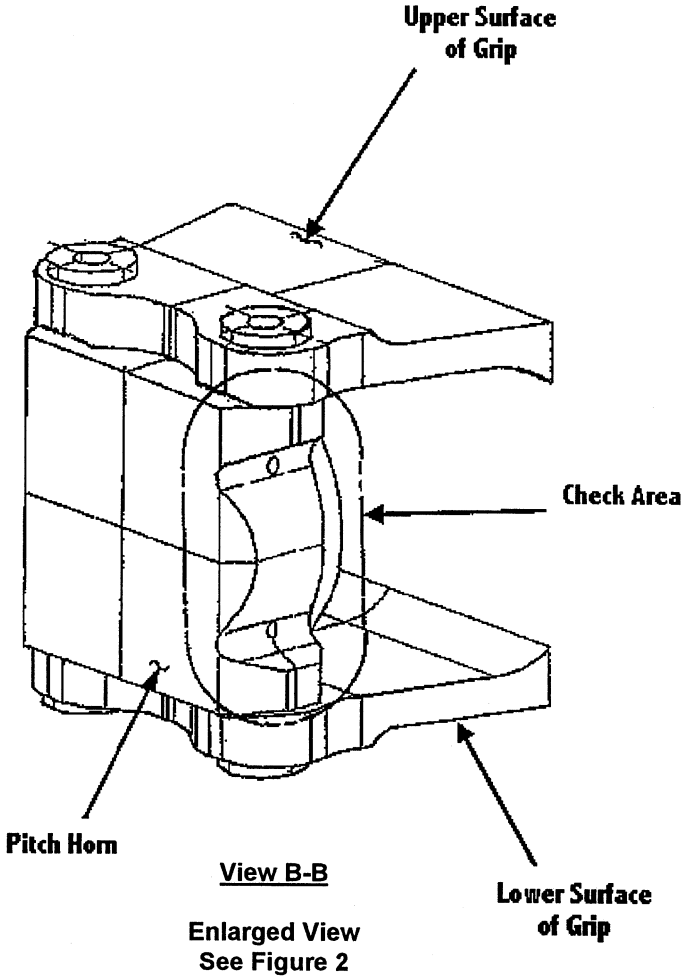

Figure 4

(4) An owner/operator (pilot) may perform the visual check required by this AD. The pilot must enter compliance with paragraph (a) of this AD into the helicopter maintenance records in accordance with 14 CFR 43.11 and 91.417(a)(2)(v)). A pilot may perform this check because it involves only a visual check for a crack in the grip or pitch horn and can be performed equally well by a pilot or a mechanic.

(b) Within 7 days or 10 hours TIS, whichever occurs first, and thereafter at intervals not to exceed 25 hours TIS, using a 10-power or higher magnifying glass, visually inspect each grip and pitch horn for a crack in accordance with the Accomplishment Instructions, Part II, paragraphs 1 and 2, of Bell Helicopter Textron Alert Service Bulletin Nos. 222U–02–64, 222–02–93, and 230–02–26, all dated April 1, 2002, as applicable.

(c) If a crack is found, replace the unairworthy grip or pitch horn with an airworthy part before further flight.

(d) An alternative method of compliance or adjustment of the compliance time that provides an acceptable level of safety may be used if approved by the Manager, Regulations Group, FAA. Operators shall submit their requests through an FAA Principal Maintenance Inspector, who may concur or comment and then send it to the Manager, Regulations Group.

Note 2: Information concerning the existence of approved alternative methods of compliance with this AD, if any, may be obtained from the Regulations Group.

(e) Special flight permits may be issued in accordance with 14 CFR 21.197 and 21.199 to operate the helicopter to a location where the inspection requirements of paragraph (b) of this AD can be accomplished.

(f) The inspection shall be done in accordance with the Accomplishment Instructions, Part II, paragraphs 1 and 2, of Bell Helicopter Textron Alert Service Bulletin Nos. 222U–02–64, 222–02-93, and 230–02–26, all dated April 1, 2002, as applicable. This incorporation by reference was approved by the Director of the Federal Register in accordance with 5 U.S.C. 552(a) and 1 CFR part 51. Copies may be obtained from Bell Helicopter Textron Canada, 12,800 Rue de l'Avenir, Mirabel, Quebec J7J1R4, telephone (450) 437–2862 or (800) 363-8023, fax (450) 433–0272. Copies may be inspected at the FAA, Office of the Regional Counsel, Southwest Region, 2601 Meacham Blvd., Room 663, Fort Worth, Texas; or at the Office of the Federal Register, 800 North Capitol Street, NE., suite 700, Washington, DC.

(g) This amendment becomes effective on August 21, 2002, to all persons except those persons to whom it was made immediately effective by Emergency AD 2002–08–54, issued May 2, 2002, which contained the requirements of this amendment.

Note 3: The subject of this AD is addressed in Transport Canada (Canada) AD CF–2002–23, dated April 2, 2002.

Issued in Fort Worth, Texas, on July 25, 2002.

Eric Bries,

Acting Manager, Rotorcraft Directorate, Aircraft Certification Service.

[FR Doc. 02–19486 Filed 8–5–02; 8:45 am]

BILLING CODE 4910–13–P

DEPARTMENT OF TRANSPORTATION

Federal Aviation Administration

14 CFR Part 39

[Docket No. 2000–NE–32–AD; Amendment 39–12832; AD 2002–15–04]

RIN 2120–AA64

Airworthiness Directives; Honeywell International, Inc., (formerly AlliedSignal, Inc. and Textron Lycoming) T5313B, T5317 Series, and T53 Series Turboshaft Engines

AGENCY: Federal Aviation Administration, DOT.

ACTION: Final rule.

SUMMARY: This amendment adopts a new airworthiness directive (AD), that is applicable to Honeywell International, Inc., (formerly AlliedSignal, Inc. and Textron Lycoming) T5313B, T5317 series and former military T53 series, turboshaft engines having certain serial number centrifugal compressor impellers, installed. This amendment requires for T53 series engines, a revised operating cycle count (prorate) for those compressor impellers if installed, and initial and repetitive inspections, with eventual compressor impeller replacement. In addition, this amendment requires the marking of those compressor impellers. This amendment is prompted by a report from the supplier that four centrifugal compressor impellers may have been inadvertently misidentified. The actions specified by this AD are intended to prevent premature failure of the impellers from being operated beyond their design service life, which could result in an uncontained engine failure, in-flight shutdown, or damage to the helicopter.

DATES: Effective September 10, 2002. The incorporation by reference of certain publications listed in the regulations is approved by the Director of the Federal Register as of September 10, 2002.

ADDRESSES: The service information referenced in this AD may be obtained from Honeywell International, Inc. (formerly AlliedSignal, Inc. and Textron Lycoming), Attn: Data Distribution, M/S 64–3/2101–201, P.O. Box 29003, Phoenix, AZ 85038–9003, telephone: (602) 365–2493; fax: (602) 365–5577. This information may be examined, by appointment, at the Federal Aviation Administration (FAA), New England Region, Office of the Regional Counsel, 12 New England Executive Park, Burlington, MA; or at the Office of the Federal Register, 800 North Capitol Street, NW, suite 700, Washington, DC.

FOR FURTHER INFORMATION CONTACT: Robert Baitoo, Aerospace Engineer, Los Angeles Aircraft Certification Office (ACO), FAA, Transport Airplane Directorate, 3960 Paramount Blvd., Lakewood, CA 90712–4137; telephone: (562) 627–5245; fax: (562) 627–5210.

SUPPLEMENTARY INFORMATION: A proposal to amend part 39 of the Federal Aviation Regulations (14 CFR part 39) to include an AD that is applicable to Honeywell International, Inc., (formerly AlliedSignal, Inc. and Textron Lycoming) T5313B, T5317 series and former military T53 series, turboshaft engines having certain serial number centrifugal compressor impellers, installed was published in the **Federal Register** on June 12, 2001 (66 FR 31566). That action proposed to require for T53 series engines, a revised operating cycle count (prorate) for those compressor impellers if installed, and initial and repetitive inspections, with eventual compressor impeller replacement. In addition, that action proposed to require the marking of those compressor impellers in accordance with Honeywell International, Inc. Service Bulletins (SB's) T5313B/17–0020, Revision 5, dated March 31, 2001; T53–L–13B–0020, Revision 2, dated April 25, 2001; T53–L–13B/D–0020, Revision 1, dated April 25, 2001; and T53–L–703–0020, Revision 1, dated April 25, 2001. Also, Textron Lycoming SB T5313B/17–0052, Revision 2, dated December 16, 1993; AlliedSignal, Inc. SB's T53–L–13B–0108, Revision 1, dated November 22, 1999; T53–L–13B/D–0108, Revision 1, dated November 22, 1999; and T53–L–703–0108, Revision 1, dated November 22, 1999.

Since the publication of the proposed amendment, two Honeywell International, Inc. service bulletins have been revised. Therefore, this AD requires compliance in accordance with Honeywell International, Inc. SB's T5313B/17–0020, Revision 6, dated May 2, 2001 and T53–L–13B–0020, Revision 3, dated October 25, 2001.

Comments

Interested persons have been afforded an opportunity to participate in the making of this amendment. No comments were received on the proposal or the FAA's determination of the cost to the public. The FAA has determined that air safety and the public interest require the adoption of the rule as proposed.

Economic Analysis

The FAA estimates there are approximately four Honeywell International, Inc., (formerly AlliedSignal, Inc., and Textron Lycoming) T5313B series, T5317 series, and former military T53 series turboshaft engines having the misidentified centrifugal compressor impellers, that are installed on helicopters of U.S. registry. The FAA also estimates that it would take approximately eight work hours per engine to perform the inspection, and that the average labor rate is $60 per work hour. No additional work hour cost would be incurred if the centrifugal compressor impeller is replaced during normal engine disassembly. The prorated cost of a replacement compressor impeller is estimated to be $20,000. Based on these figures, the total labor cost of the AD to U.S. operators is estimated to be $21,920.

Regulatory Analysis

This final rule does not have federalism implications, as defined in Executive Order 13132, because it would not have a substantial direct effect on the States, on the relationship between the national government and the States, or on the distribution of power and responsibilities among the various levels of government. Accordingly, the FAA has not consulted with state authorities prior to publication of this final rule.

For the reasons discussed above, I certify that this action (1) is not a ''significant regulatory action'' under Executive Order 12866; (2) is not a ''significant rule'' under the DOT Regulatory Policies and Procedures (44 FR 11034, February 26, 1979); and (3) will not have a significant economic impact, positive or negative, on a substantial number of small entities under the criteria of the Regulatory Flexibility Act. A final evaluation has been prepared for this action and it is contained in the Rules Docket. A copy of it may be obtained by contacting the Rules Docket at the location provided under the caption **ADDRESSES.**

List of Subjects in 14 CFR Part 39

Air transportation, Aircraft, Aviation safety, Incorporation by reference, Safety.

Adoption of the Amendment

Accordingly, pursuant to the authority delegated to me by the Administrator, the Federal Aviation Administration amends part 39 of the Federal Aviation Regulations (14 CFR part 39) as follows:

PART 39—AIRWORTHINESS DIRECTIVES

1. The authority citation for part 39 continues to read as follows:

Authority: 49 U.S.C. 106(g), 40113, 44701.

§ 39.13 [Amended]

2. Section 39.13 is amended by adding a new airworthiness directive to read as follows:

2002–15–04 Honeywell International, Inc., (formerly AlliedSignal, Inc. and Textron Lycoming) T5313B, T5317 Series, and T53 Series Turboshaft Engines: Amendment 39–12832. Docket No. 2000–NE–32–AD.

Applicability: This airworthiness directive (AD) is applicable to Honeywell International, Inc., (formerly AlliedSignal, Inc., and Textron Lycoming) T5313B series, T5317 series, and former military T53 series, turboshaft engines with centrifugal compressor impellers having serial numbers (SN's) 83317, 83327, 83328, or 83330 installed. These engines are installed on, but not limited to Bell Helicopter Textron 204, 205, and 209 series, and Kaman K–1200 series helicopters, and the following surplus military helicopters that have been certified in accordance with §§ 21.25 or 21.27 of the Federal Aviation Regulations (14 CFR 21.25 or 21.27): Bell Helicopter Textron manufactured AH–1, UH–1, and SW–204/205 (UH–1) series.

Note 1: This AD applies to each engine identified in the preceding applicability provision, regardless of whether it has been modified, altered, or repaired in the area subject to the requirements of this AD. For engines that have been modified, altered, or repaired so that the performance of the requirements of this AD is affected, the owner/operator must request approval for an alternative method of compliance in accordance with paragraph (i) of this AD. The request should include an assessment of the effect of the modification, alteration, or repair on the unsafe condition addressed by this AD; and, if the unsafe condition has not been eliminated, the request should include specific proposed actions to address it.

Compliance: Compliance with this AD is required as indicated, unless already done.

To prevent premature failure of the impellers from being operated beyond their design service life, which could result in an uncontained engine failure, in-flight shutdown, or damage to the helicopter, do the following:

Life Limits

(a) When conducting a revised centrifugal compressor impeller operating cycle count on impellers having SN's 83317, 83327, 83328, or 83330, consider these impellers to be centrifugal compressor impeller P/N 1–100–078–07. The life limit must use the value as if these centrifugal compressor impellers are P/N 1–100–078–07.

Revised Operating Cycle Count (Prorate) for T53 Engines

(b) For T5313B series, T5317 series, and former military T53 series engines, within 25 operating cycles or 7 calendar days, whichever occurs first, after the effective date of this AD, perform the following:

(1) Conduct a revised centrifugal compressor impeller operating cycle count (prorate) in accordance with paragraph 2.E.of the Honeywell International, Inc. Service Bulletin (SB) that applies to the engine, from the following list:

(i) For T53–L–13B series engines, use SB T53–L–13B–0020, Revision 3, dated October 25, 2001.

(ii) For T53–L–13B/D engines, use SB T53–L–13B/D–0020, Revision 1, dated April 25, 2001.

(iii) For T53–L–703 engines, use SB T53–L–703–0020, Revision 1, dated April 25, 2001.

(iv) For T5313B series and T5317 series engines, use SB T531B/17–0020, Revision 6, dated May 2, 2001.

(2) Remove from service centrifugal compressor impellers with SN's 83317, 83327, 83328, or 83330, that exceed their new life limit as calculated in accordance with paragraph (b)(1) of this AD.

Impeller Marking

(c) At the next access to the centrifugal compressor impeller, mark the impeller by vibropeening a line over the –14 suffix, and vibropeen a –07 suffix immediately following the –14. Use the following vibropeening parameters:

(1) Vibropeen to a depth of 0.001–0.006 inch.

(2) Do not vibropeen within 0.30 inch of corners, fillets, or sharp edges.

Definition

(d) For the purpose of this AD, access to the centrifugal compressor impeller is defined as whenever the turboshaft engine is disassembled sufficiently as specified by the applicable maintenance manual, to expose the compressor impeller for marking in accordance with paragraph (c) of this AD.

Inspection of Impellers on T5313B and T5317 Series Engines

(e) For T5313B and T5317 series engines, inspect centrifugal compressor impellers having SN's 83317, 83327, 83328, or 83330, for cracks in accordance with the Accomplishment Instructions of Textron Lycoming SB No. T5313B/17–0052, Revision 2, dated December 16, 1993, as follows:

(1) For those centrifugal compressor impellers installed on AlliedSignal, Inc. Model T5313B engines, accomplish the following:

(i) For centrifugal compressor impellers with equal to or greater than 4,600 cycles in service (CIS) on the effective date of this AD, initially inspect within 200 CIS after the effective date of this AD.

(ii) For those centrifugal compressor impellers with less than 4,600 CIS on the effective date of this AD, initially inspect no later than 4,800 CIS.

(2) For those centrifugal compressor impellers installed on AlliedSignal, Inc. T5317 series engines, accomplish the following:

(i) For those centrifugal compressor impellers with equal to or greater than 3,500 CIS on the effective date of this AD, initially inspect within 200 CIS after the effective date of this AD.

(ii) For those centrifugal compressor impellers with less than 3,500 CIS on the effective date of this AD, initially inspect no later than 3,700 CIS.

(3) Centrifugal compressor impellers found cracked in accordance with the Accomplishment Instructions of Textron Lycoming SB No. T5313B/17–0052, Revision 2, dated December 16, 1993, must be removed from service and replaced with a serviceable part that does not exceed the life limit.

(4) If no cracks are detected, perform repetitive inspections of the centrifugal compressor impellers at intervals not to exceed 500 CIS since last inspection in accordance with the Accomplishment Instructions of Textron Lycoming SB No. T5313B/17–0052, Revision 2, dated December 16, 1993.

Inspection of Impellers on T53–L–13B Series Engines

(f) For T53–L–13B series engines with centrifugal compressor impellers having SN's 83317, 83327, 83328, or 83330, perform the following:

(1) Within 25 operating hours from the effective date of this AD, inspect the centrifugal compressor impeller for cracks using the revised cycle count (prorate) required by paragraph (b)(1) of this AD, in accordance with Accomplishment Instructions of AlliedSignal, Inc. SB No. T53–L–13B–0108, Revision 1, dated November 22, 1999.

(2) If cracks are detected, then prior to further flight, replace centrifugal compressor impellers found cracked in accordance with

the Accomplishment Instructions of AlliedSignal, Inc. SB No. T53–L–13B–0108, Revision 1, dated November 22, 1999, and replace with a centrifugal compressor impeller P/N 1–100–078–13/–14.

(3) If no cracks are detected, perform repetitive inspections of the centrifugal compressor impellers at intervals not to exceed 100 operating hours since last inspection in accordance with the Accomplishment Instructions of AlliedSignal, Inc. SB No. T53–L–13B–0108, Revision 1, dated November 22, 1999.

(4) Within 300 operating hours or 6 calendar months, whichever occurs first, after the effective date of this AD, replace centrifugal compressor impellers having SN's 83317, 83327, 83328, or 83330, with a centrifugal compressor impeller P/N 1–100–078–13/–14. Replacement of centrifugal compressor impellers having SN's 83317, 83327, 83328, or 83330, with a centrifugal compressor impeller P/N 1–100–078–13/–14 constitutes terminating action for the inspection requirements of paragraphs (f)(1) and (f)(3) of this AD.

Inspection of Impellers on T53–L–13B/D Series Engines

(g) For T53–L–13B/D series engines with centrifugal compressor impellers having SN's 83317, 83327, 83328, or 83330, perform the following:

(1) Within 25 operating hours from the effective date of this AD, inspect the centrifugal compressor impeller for cracks using the revised cycle count (prorate) required by paragraph (b)(1) of this AD, in accordance with Accomplishment Instructions of AlliedSignal, Inc. SB No. T53–L–13B/D–0108, Revision 1, dated November 22, 1999.

(2) If cracks are detected, then prior to further flight, replace centrifugal compressor impellers found cracked in accordance with the Accomplishment Instructions of AlliedSignal, Inc. SB No. T53–L–13B/D–0108, Revision 1, dated November 22, 1999, and replace with a centrifugal compressor impeller P/N 1–100–078–13/–14.

(3) If no cracks are detected, perform repetitive inspections of the centrifugal compressor impellers at intervals not to exceed 100 operating hours since last inspection in accordance with the Accomplishment Instructions of AlliedSignal, Inc. SB No. T53–L–13B/D–0108, Revision 1, dated November 22, 1999.

(4) Within 300 operating hours or 6 calendar months, whichever occurs first, after the effective date of this AD, replace centrifugal compressor impellers having SN's 83317, 83327, 83328, or 83330, with a centrifugal compressor impeller P/N 1–100–078–13/–14. Replacement of centrifugal compressor impellers having SN's 83317, 83327, 83328, or 83330, with a centrifugal compressor impeller P/N 1–100–078–13/–14 constitutes terminating action for the inspection requirements of paragraphs (g)(1) and (g)(3) of this AD.

Inspection of Impellers on T53–L–703 Engines

(h) For T53–L–703 series engines with centrifugal compressor impellers having SN's 83317, 83327, 83328, or 83330, perform the following:

(1) Within 25 operating hours from the effective date of this AD, inspect the centrifugal compressor impeller for cracks using the revised cycle count (prorate) required by paragraph (b)(1) of this AD, in accordance with Accomplishment Instructions of AlliedSignal, Inc. SB No. T53–L–703–0108, Revision 1, dated November 22, 1999.

(2) If cracks are detected, then prior to further flight, replace centrifugal compressor impellers found cracked in accordance with the Accomplishment Instructions of AlliedSignal, Inc. SB No. T53–L–703–0108, Revision 1, dated November 22, 1999, and replace with a centrifugal compressor impeller part number (P/N) 1–100–078–13/–14.

(3) If no cracks are detected, perform repetitive inspections of the centrifugal compressor impellers at intervals not to exceed 100 operating hours since last inspection in accordance with the Accomplishment Instructions of AlliedSignal, Inc. SB No. T53–L–703–0108, Revision 1, dated November 22, 1999.

(4) Within 300 operating hours or 6 calendar months, whichever occurs first, after the effective date of this AD, replace centrifugal compressor impellers having SN's 83317, 83327, 83328, or 83330, with a centrifugal compressor impeller P/N 1–100–078–13/–14. Replacement of centrifugal compressor impellers having SN's 83317, 83327, 83328, or 83330, with a centrifugal compressor impeller P/N 1–100–078–13/–14 constitutes terminating action for the inspection requirements of paragraphs (h)(1) and (h)(3) of this AD.

Alternative Methods of Compliance

(i) An alternative method of compliance or adjustment of the compliance time that provides an acceptable level of safety may be used if approved by the Manager, Los Angeles Aircraft Certification Office (ACO). Operators must submit their requests through an appropriate FAA Principal Maintenance Inspector, who may add comments and then send it to the Manager, Los Angeles ACO.

Note 2: Information concerning the existence of approved alternative methods of compliance with this AD, if any, may be obtained from the Los Angeles ACO.

Special Flight Permits

(j) Special flight permits may be issued in accordance with §§ 21.197 and 21.199 of the Federal Aviation Regulations (14 CFR 21.197 and 21.199) to operate the helicopter to a location where the requirements of this AD can be done.

Documents That Have Been Incorporated by Reference

(k) The inspections must be done in accordance with the following SB's:

Document No.	Pages	Revision	Date
Honeywell International, Inc., SB T5313B/17–0020	All	6	May 2, 2001.
Total pages 14			
Honeywell International, Inc., SB T53–L–13B–0020	All	3	Oct. 25, 2001.
Total pages 13			
Honeywell International, Inc., SB T53–L–13B/D–0020	All	1	April 25, 2001.
Total pages 12			
Honeywell International, Inc., SB T53–L–703–0020	All	1	April 25, 2001.
Total pages 12			
Textron Lycoming SB, SB T5313B/17–0052	All	2	Dec. 16, 1993.
Total pages 8			
AlliedSignal, Inc., SB T53–L–13B–0108	1	Original	July 22, 1999.
	2	1	Nov. 22, 1999.
	3–12	Original	July 22, 1999.
Total pages 12			
Allied Signal, Inc., SB T53–L–13B/D–0108	1	Original	July 22, 1999.
	2	1	Nov. 22, 1999.
	3–12	Original	July 22, 1999.
Total pages 12			
AlliedSignal, Inc., SB T53–L–703–0108	1	Original	July 22, 1999.
	2	1	Nov. 22, 1999.
	3–12	Original	July 22, 1999.
Total pages 12			

This incorporation by reference was approved by the Director of the Federal Register in accordance with 5 U.S.C. 552(a) and 1 CFR part 51. Copies may be obtained from Honeywell International Inc. Aerospace Services Attn.: Data Distribution, M/S 64–3/2101–201, PO Box 29003, Phoenix, AZ 85038–9003; telephone (602) 365–2493, fax (602) 365–5577. Copies may be inspected, by appointment, at the FAA, New England Region, Office of the Regional Counsel, 12 New England Executive Park, Burlington, MA; or at the Office of the Federal Register, 800 North Capitol Street, NW, suite 700, Washington, DC.

Effective Date

(l) This amendment becomes effective on September 10, 2002.

Issued in Burlington, Massachusetts, on July 19, 2002.

Jay J. Pardee,

Manager, Engine and Propeller Directorate, Aircraft Certification Service.

[FR Doc. 02–19253 Filed 8–5–02; 8:45 am]

BILLING CODE 4910–13–P

DEPARTMENT OF HEALTH AND HUMAN SERVICES

Food and Drug Administration

21 CFR Part 510

New Animal Drugs; Change of Sponsor's Address

AGENCY: Food and Drug Administration, HHS.

ACTION: Final rule.

SUMMARY: The Food and Drug Administration (FDA) is amending the animal drug regulations to reflect a change of sponsor's address for Endo Pharmaceuticals, Inc.

DATES: This rule is effective August 6, 2002.

FOR FURTHER INFORMATION CONTACT: Lonnie W. Luther, Center for Veterinary Medicine (HFV–101), Food and Drug Administration, 7500 Standish Pl., Rockville, MD 20855, 301–827–0209, e-mail: lluther@cvm.fda.gov.

SUPPLEMENTARY INFORMATION: Endo Pharmaceuticals, Inc., 223 Wilmington West Chester Pike, Chadds Ford, PA 19317, has informed FDA of a change of sponsor address to 100 Painters Dr., Chadds Ford, PA 19317. Accordingly, the agency is amending the regulations in 21 CFR 510.600(c)(1) and (c)(2) to reflect the change of sponsor address.

This rule does not meet the definition of ''rule'' in 5 U.S.C. 804(3)(A) because it is a rule of ''particular applicability.'' Therefore, it is not subject to congressional review requirements in 5 U.S.C. 801–808.

List of Subjects in 21 CFR Part 510

Administrative practice and procedure, Animal drugs, Labeling, Reporting and recordkeeping requirements.

Therefore, under the Federal Food, Drug, and Cosmetic Act and under authority delegated to the Commissioner of Food and Drugs and redelegated to the Center for Veterinary Medicine, 21 CFR part 510 is amended as follows:

PART 510—NEW ANIMAL DRUGS

1. The authority citation for 21 CFR part 510 continues to read as follows:

Authority: 21 U.S.C. 321, 331, 351, 352, 353, 360b, 371, 379e.

2. Section 510.600 is amended in the table in paragraph (c)(1) by revising the entry for ''Endo Pharmaceuticals, Inc.'' and in the table in paragraph (c)(2) by revising the entry for ''060951'' to read as follows:

§ 510.600 Names, addresses, and drug labeler codes of sponsors of approved applications.

* * * * *

(c) * * *

(1) * * *

Firm name and address	Drug labeler code
* * * * * * *	
Endo Pharmaceuticals, Inc., 100 Painters Dr., Chadds Ford, PA 19317	060951
* * * * * * *	

(2) * * *

Drug labeler code	Firm name and address
* * * * * * *	
060951	Endo Pharmaceuticals, Inc., 100 Painters Dr., Chadds Ford, PA 19317
* * * * * * *	

Dated: July 19, 2002.

Andrew J. Beaulieu,

Acting Director, Office of New Animal Drug Evaluation, Center for Veterinary Medicine.

[FR Doc. 02–19767 Filed 8–5–02; 8:45 am]

BILLING CODE 4160–01–S

DEPARTMENT OF STATE

22 CFR Part 196

[Public Notice 4077]

The Thomas R. Pickering Foreign Affairs/Graduate Foreign Affairs Fellowship Program and Grants to Post-Secondary Institutions

AGENCY: Department of State.

ACTION: Final rule.

SUMMARY: This document establishes the rule by which the Department of State's Thomas R. Pickering Foreign Affairs/Graduate Foreign Affairs Fellowship program will be administered. The State Department Basic Authorities Act states that the Department shall establish regulations which will provide for a limit on the size of any specific grant and, regarding any grant to individuals, shall ensure no grant recipient receives grants from one or more Federal programs which in the aggregate would exceed the cost of his or her educational expenses and shall require satisfactory educational progress by grantees as a

condition of eligibility for continued participation in the program. This rule will facilitate the recruitment of a talented and diverse group of students into the Foreign Service.

EFFECTIVE DATE: October 31, 2002.

FOR FURTHER INFORMATION CONTACT: Richard Esper, Office of Recruitment/Student Programs at (202) 261–8924.

SUPPLEMENTARY INFORMATION: The Thomas R. Pickering Foreign Affairs/Graduate Foreign Affairs Fellowship Program was established to recruit a talented and diverse group of students into the Foreign Service. The State Department Basic Authorities Act (22 U.S.C. 2719) authorizes the Secretary of State to make grants to post-secondary education institutions or students for the purpose of increasing the level of knowledge and awareness of and interest in employment with the Foreign Service. The program provides scholarships to undergraduate and graduate students in academic programs relevant to international affairs, political and economic analysis, administration, management and science policy. While in school, Fellows participate in one domestic and one overseas internship within the U.S. Department of State. After completing their academic training, and successfully passing the Foreign Service entry requirements, Fellows will enter the U.S. Department of State Foreign Service as Foreign Service Officers. Consideration is given to all qualified applicants who, in addition to outstanding leadership skills and academic achievement, demonstrate financial need. The number of fellowships awarded is determined by available funding.

Regulatory Findings

Administrative Procedure Act

The Department is publishing this rule as a final rule after it was published as a proposed rule on January 11, 2002 (67 FR 1420). No comments were received regarding the final rule.

Regulatory Flexibility Act

The Department of State, in accordance with the Regulatory Flexibility Act (5 U.S.C. 605(b)), has reviewed this regulation and, by approving it, certifies that this rule will not have a significant economic impact on a substantial number of small entities.

Unfunded Mandates Act of 1995

This rule will not result in the expenditure by State, local and tribal governments, in the aggregate, or by the private sector, of $1 million or more in any year and it will not significantly or uniquely affect small governments. Therefore, no actions were deemed necessary under the provisions of the Unfunded Mandates Reform Act of 1995.

Small Business Regulatory Enforcement Fairness Act of 1996

This rule is not a major rule as defined by section 804 of the Small Business Regulatory Enforcement Act of 1996. This rule will not result in an annual effect on the economy of $100 million or more; a major increase in costs or prices; or significant adverse effects on competition, employment, investment, productivity, innovation, or on the ability of United States-based companies to compete with foreign based companies in domestic and import markets.

Executive Order 12866

The Department of State does not consider this rule to be a ''significant regulatory action'' under Executive Order 12866, section 3(f), Regulatory Planning and Review. In addition, the Department is exempt from Executive Order 12866 except to the extent that it is promulgating regulations in conjunction with a domestic agency that are significant regulatory actions. The Department has nevertheless reviewed the regulation to ensure its consistency with the regulatory philosophy and principles set forth in that Executive Order.

Executive Order 13132

This regulation will not have substantial direct effects on the States, on the relationship between the national government and the States, or on the distribution of power and responsibilities among the various levels of government. Therefore, in accordance with section 6 of Executive Order 13132, it is determined that this rule does not have sufficient federalism implications to require consultations or warrant the preparation of a federalism summary impact statement.

Paperwork Reduction Act

The reporting or recordkeeping action required from the public under the rule requires the approval of the Office of Management and Budget under the Paperwork Reduction Act. A Fellowship application form was forwarded to OMB as required. The Pickering Fellowship application form number is: DS–3091 and the number of the collection is: OMB #1405–0143.

List of Subjects in 22 CFR Part 196

Education, Educational study programs, Grant programs—education, Grant programs—foreign affairs, Reporting and recordkeeping requirements, Scholarships and fellowships, Students.

For the reasons discussed in the preamble, the U.S. Department of State amends 22 CFR chapter I by adding part 196 to read as follows:

PART 196—THOMAS R. PICKERING FOREIGN AFFAIRS/GRADUATE FOREIGN AFFAIRS FELLOWSHIP PROGRAM

Sec.
196.1 What is the Fellowship Program?
196.2 How is the Fellowship Program administered?
196.3 Grants to post-secondary education institutions.
196.4 Administering Office.

Authority: 22 U.S.C. 2719.

§ 196.1 What is the Fellowship Program?

The Thomas R. Pickering Foreign Affairs/Graduate Foreign Affairs Fellowship Program is designed to attract outstanding men and women at the undergraduate and graduate educational levels for the purpose of increasing the level of knowledge and awareness of and employment with the Foreign Service, consistent with 22 U.S.C. 3905. The Program develops a source of trained men and women, from academic disciplines representing the skill needs of the Department, who are dedicated to representing the United States' interests abroad.

§ 196.2 How is the Fellowship Program administered?

(a) *Eligibility.* Eligibility will be determined annually by the Department of State and publicized nationwide. Fellows must be United States citizens.

(b) *Provisions.* The grant awarded to each individual student shall not exceed $250,000 for the total amount of time the student is in the program. Fellows are prohibited from receiving grants from one or more Federal programs, which in the aggregate would exceed the cost of his or her educational expenses. Continued eligibility for participation is contingent upon the Fellow's ability to meet the educational requirements set forth in paragraph (c) of this section.

(c) *Program requirements.* Eligibility for participation in the program is conditional upon successful completion of pre-employment processing specified by the Department of State, including background investigation, medical examination, and drug testing. As a condition of eligibility for continued receipt of grant funds, fellows are required to complete prescribed coursework and maintain a satisfactory

grade point average as determined by the Department of State. Fellows are also required to accept employment with the Department of State's Foreign Service upon successful completion of the program, and Foreign Service entry requirements. Fellows must continue employment for a period of one and one-half years for each year of education funded by the Department of State.

§ 196.3 Grants to post-secondary education institutions.

The Department of State may make a grant to a post-secondary education institution for the purpose of increasing the level of knowledge and awareness of and interest in employment with the Foreign Service, consistent with 22 U.S.C. 3905, not to exceed $1,000,000, unless otherwise authorized by law.

§ 196.4 Administering office.

The Department of State's Bureau of Human Resources, Office of Recruitment is responsible for administering the Thomas R. Pickering Foreign Affairs/Graduate Foreign Affairs Fellowship Program and grants to post-secondary institutions and may be contacted for more detailed information.

Dated: July 17, 2002.

Ruben Torres,

Executive Director, Bureau of Human Resources, Department of State.

[FR Doc. 02–19449 Filed 8–5–02; 8:45 am]

BILLING CODE 4710–15–P

DEPARTMENT OF JUSTICE

Bureau of Prisons

28 CFR Part 542

[BOP–1076–F]

RIN 1120–AA72

Administrative Remedy Program: Excluded Matters

AGENCY: Bureau of Prisons, Justice.

ACTION: Final rule.

SUMMARY: In this document, the Bureau of Prisons (Bureau) amends its regulations to allow staff to process under the Administrative Remedy Program any request or appeal related to an inmate's conditions of confinement. We intend this amendment to provide the inmate with maximum opportunity to seek review of any issue related to his/her confinement.

DATES: This rule is effective August 6, 2002.

ADDRESSES: Rules Unit, Office of General Counsel, Bureau of Prisons, HOLC Room 754, 320 First Street, NW., Washington, DC 20534.

FOR FURTHER INFORMATION CONTACT: Sarah Qureshi, Office of General Counsel, Bureau of Prisons, phone (202) 307–2105.

SUPPLEMENTARY INFORMATION: We proposed this rule on June 27, 2000 (65 FR 39767). We received no comments on the proposed rule. In this document, we finalize the proposed rule.

What Does This Final Rule Do?

This final rule amends our regulations on the Administrative Remedy Program (28 CFR part 542, subpart B, published in the **Federal Register** on January 2, 1996, at 61 FR 88).

Administrative Remedy Program. The Bureau's Administrative Remedy Program allows inmates to seek review of issues relating to their confinement. Often, we may satisfy an inmate's grievance by explaining the relevant policy or practice. The Administrative Remedy Program also allows us to examine our policies and practices and make changes without judicial intervention.

Our previous regulation. Previously, § 542.12 specified matters excluded from consideration under the Administrative Remedy Program. Under paragraph (b) of this section, we did not accept requests or appeals for claims with other statutorily-mandated procedures (including tort claims [*see* 28 CFR 543, subpart C], Inmate Accident Compensation claims [28 CFR 301], and Freedom of Information Act or Privacy Act requests [28 CFR 513, subpart D]) for processing under the Administrative Remedy Program. We intended these exclusions to reflect the fact that there were other procedures for corrective action which would not be available under the Administrative Remedy Program.

Our new final rule. In this rule, we remove these exclusions. In accepting such requests or appeals under the Administrative Remedy Program, we will more quickly address the full range of corrective actions available, including any that may be peripheral to issues which have other statutorily-mandated administrative procedures in place.

For example, the Administrative Remedy Program ordinarily cannot provide monetary relief. An inmate's claim for monetary relief may, however, present the basis for non-monetary relief. Under the previous regulations, we did not ordinarily accept the inmate's claim in the Administrative Remedy Program, even though we could provide non-monetary relief on the claim.

Under this final rule, however, we will accept the inmate's claim for monetary relief in the Administrative Remedy Program. We will then provide non-monetary relief on the claim, if warranted, and refer the inmate to the appropriate statutorily-mandated procedure to resolve remaining issues.

Where the inmate's claim can only be addressed by another administrative procedure, we will simply respond by referring the inmate to the appropriate procedure. Bureau staff responding to the administrative remedy are not responsible for investigating such a claim.

Therefore, we delete § 542.12. Sections 542.10 and 542.16 already cover statements in § 542.12 of the regulation's intent and provisions for assistance to the inmate. We also moved the previous stipulation in § 542.12 that an inmate may not submit a Request or Appeal on behalf of another inmate to § 542.10.

We revise § 542.10 to allow inmates to file any claim under the Administrative Remedy Program, even those which have statutorily-mandated remedies. In our revision, we state that, if an inmate raises an issue in a request or appeal that cannot be resolved through the Administrative Remedy Program, we will refer the inmate to the appropriate statutorily-mandated procedures.

This rule does not require the inmate to file under the Administrative Remedy Program before filing under statutorily-mandated procedures for tort claims (*see* 28 CFR 543, subpart C), Inmate Accident Compensation claims (28 CFR 301), and Freedom of Information Act or Privacy Act requests (28 CFR 513, subpart D).

Of course, if an inmate has a claim that is solely governed by other statutorily-mandated administrative procedures, the inmate need not first file a claim under the Administrative Remedy Program.

Executive Order 12866

The Office of Management and Budget (OMB) determined that certain rules are part of a category of actions which are not ''significant regulatory actions'' under section 3(f) of Executive Order 12866. Because this rule falls within that category, OMB did not review it.

Executive Order 13132

This regulation will not have substantial direct effects on the States, on the relationship between the national government and the States, or on distribution of power and responsibilities among the various levels of government. Under Executive Order 13132, this rule does not have

sufficient federalism implications for which we would prepare a Federalism Assessment.

Regulatory Flexibility Act

The Director of the Bureau of Prisons, under the Regulatory Flexibility Act (5 U.S.C. 605(b)), reviewed this regulation. By approving it, the Director certifies that it will not have a significant economic impact upon a substantial number of small entities because: This rule is about the correctional management of offenders committed to the custody of the Attorney General or the Director of the Bureau of Prisons, and its economic impact is limited to the Bureau's appropriated funds.

Unfunded Mandates Reform Act of 1995

This rule will not cause State, local and tribal governments, or the private sector, to spend $100,000,000 or more in any one year, and it will not significantly or uniquely affect small governments. We do not need to take action under the Unfunded Mandates Reform Act of 1995.

Small Business Regulatory Enforcement Fairness Act of 1996

This rule is not a major rule as defined by § 804 of the Small Business Regulatory Enforcement Fairness Act of 1996. This rule will not result in an annual effect on the economy of $100,000,000 or more; a major increase in costs or prices; or significant adverse effects on competition, employment, investment, productivity, innovation, or on the ability of United States-based companies to compete with foreign-based companies in domestic and export markets.

Plain Language Instructions

We want to make our documents easier to read and understand. If you can suggest how to improve the clarity of these regulations, call or write to Sarah Qureshi at the address or telephone number listed above.

List of Subjects in 28 CFR Part 542

Prisoners.

Kathleen Hawk Sawyer,

Director, Bureau of Prisons.

Under rulemaking authority vested in the Attorney General in 5 U.S.C. 552(a) and delegated to the Director, Bureau of Prisons, we amend 28 CFR part 542 as set forth below.

SUBCHAPTER C—INSTITUTIONAL MANAGEMENT

PART 542—ADMINISTRATIVE REMEDY

1. Revise the authority citation for 28 CFR part 542 to read as follows:

Authority: 5 U.S.C. 301; 18 U.S.C. 3621, 3622, 3624, 4001, 4042, 4081, 4082 (Repealed in part as to offenses committed on or after November 1, 1987), 5006–5024 (Repealed October 12, 1984, as to offenses committed after that date), 5039; 28 U.S.C. 509, 510.

2. Revise § 542.10 to read as follows:

§ 542.10 Purpose and scope.

(a) *Purpose.* The purpose of the Administrative Remedy Program is to allow an inmate to seek formal review of an issue relating to any aspect of his/her own confinement. An inmate may not submit a Request or Appeal on behalf of another inmate.

(b) *Scope.* This Program applies to all inmates in institutions operated by the Bureau of Prisons, to inmates designated to contract Community Corrections Centers (CCCs) under Bureau of Prisons responsibility, and to former inmates for issues that arose during their confinement. This Program does not apply to inmates confined in other non-federal facilities.

(c) *Statutorily-mandated procedures.* There are statutorily-mandated procedures in place for tort claims (28 CFR part 543, subpart C), Inmate Accident Compensation claims (28 CFR part 301), and Freedom of Information Act or Privacy Act requests (28 CFR part 513, subpart D). If an inmate raises an issue in a request or appeal that cannot be resolved through the Administrative Remedy Program, the Bureau will refer the inmate to the appropriate statutorily-mandated procedures.

§ 542.12 [Removed and Reserved]

3. Remove and reserve § 542.12.

[FR Doc. 02–19747 Filed 8–5–02; 8:45 am]

BILLING CODE 4410–05–P

ENVIRONMENTAL PROTECTION AGENCY

40 CFR Part 81

[CA–034–FIN; FRL–7256–1]

Clean Air Act Redesignation and Reclassification, Searles Valley Nonattainment Area; Designation of Coso Junction, Indian Wells Valley, and Trona Nonattainment Areas; California; Determination of Attainment of the PM–10 Standards for the Coso Junction Area; Particulate Matter of 10 microns or less (PM–10)

AGENCY: Environmental Protection Agency (EPA).

ACTION: Final rule.

SUMMARY: EPA is changing the boundaries of the Searles Valley, California moderate PM–10 nonattainment area (NA) by dividing that area into three new, separate moderate NAs: Coso Junction, Indian Wells Valley, and Trona. EPA is also finding that the Trona NA has attained the 24-hour and annual PM–10 national ambient air quality standards (NAAQS) by the Clean Air Act (CAA) mandated attainment date for moderate nonattainment areas.

EFFECTIVE DATE: September 5, 2002.

ADDRESSES: You can inspect a copy of the docket for this action at EPA's Region IX office during normal business hours. See address below. This document and the proposal for this final rule are also available as electronic files on EPA's Region 9 Web page at *www.epa.gov/region09/air.*

FOR FURTHER INFORMATION CONTACT: Karen Irwin, U.S. Environmental Protection Agency, Region 9, Air Division, Planning Office (AIR–2), 75 Hawthorne Street, San Francisco, California 94105, (415) 947–4116, *irwin.karen@epa.gov.*

SUPPLEMENTARY INFORMATION:

I. Background

A. Nonattainment Area Boundary Changes

On November 15, 1990, the date of enactment of the 1990 Clean Air Act Amendments, pursuant to CAA sections 107(d)(4)(B) and 188(a) respectively, the Searles Valley planning area was designated nonattainment and classified as moderate by operation of law. *See* 40 CFR 81.305. The Searles Valley NA is situated at the southeastern end of the Sierra Nevada Mountains and includes portions of Inyo, Kern and San Bernardino Counties. The boundaries of the NA are defined by United States

Geological Survey (USGS) Hydrologic Unit #18090205, an area of approximately 2000 square miles. *Id.*

Under section 107(d)(3)(D), the Governor of any state, on the Governor's own motion, is authorized to submit to the Administrator a revised designation [1]*COM019* of any nonattainment area or portions thereof within the State. On May 4, 2001, the California Air Resources Board (CARB) submitted to EPA a request under CAA section 107(d)(3)(D) to revise the boundaries for the Searles Valley NA by dividing the area into three separate PM–10 nonattainment areas, Coso Junction, Indian Wells Valley and Trona, to be separated along the Inyo, Kern, and San Bernardino County lines within the Searles Valley NA.

In determining whether to approve or deny a state's request for a revision to the designation of an area under section 107(d)(3)(D), EPA uses the same factors Congress directed EPA to consider when the Agency initiates a revision to a designation of an area on its own motion under section 107(d)(3)(A). These factors include air quality data, planning and control considerations, or any other air quality-related considerations the Administrator deems appropriate.

B. Determinations of Attainment/ Nonattainment

States containing areas such as Searles Valley which were designated as moderate nonattainment by operation of law under section 107(d)(4)(B) were required to develop and submit state implementation plans (SIPs) to provide for the attainment of the PM–10 NAAQS by no later than December 31, 1994.

EPA has the responsibility, pursuant to sections 179(c) and 188(b)(2) of the Act, of determining within 6 months of the applicable attainment date whether PM–10 nonattainment areas have attained the NAAQS. Section 179(c)(1) of the Act provides that these determinations are to be based upon an area's ''air quality as of the attainment date'' and section 188(b)(2) is consistent with this requirement. A total of 3 consecutive years of clean air quality data are generally necessary to show attainment of the 24-hour and annual standards for PM–10. Because the attainment deadline for the Searles Valley was December 31, 1994, for purposes of the attainment finding, EPA is using monitoring data from 1992–1994.

EPA makes the determinations of whether an area's air quality is meeting the PM–10 NAAQS based upon air quality data gathered at monitoring sites in the nonattainment area. These data are reviewed to determine the area's air quality status in accordance with EPA guidance at 40 CFR part 50, appendix K. Pursuant to appendix K, attainment of the annual PM–10 standard is achieved when the annual arithmetic mean PM–10 concentration is equal to or less than 50 μg/m3. Attainment of the 24-hour standard is determined by calculating the expected number of exceedances of the 150 μg/m3 limit per year. The 24-hour standard is attained when the expected number of exceedances is 1.0 or less.

II. EPA's Proposed Actions

On June 13, 2001, EPA proposed to divide, pursuant to CAA section 107(D)(3)(d), the Searles Valley PM–10 NA into three separate, newly created NAs: Coso Junction, Indian Wells Valley and Trona. 66 FR 31873. EPA proposed that the Coso Junction NA boundaries would consist of the portion of Inyo County contained within USGS Hydrologic Unit #18090205; the proposed Indian Wells Valley NA boundaries would include the portion of Kern County contained within USGS Hydrologic Unit #18090205; and the proposed Trona NA boundaries would include the portion of San Bernardino County contained within USGS Hydrologic Unit #18090205. The combination of these three proposed NAs would comprise the same area included in the Searles Valley NA as set forth in 40 CFR 81.305. EPA's rationale for the boundary revisions is discussed in detail in the proposed rule. *See* 66 FR 31873, 31874–31875.

In addition, EPA proposed to find, pursuant to CAA sections 179(c) and 188(b)(2), that the proposed Trona NA had attained the 24-hour and annual PM–10 standards by the moderate area attainment deadline, December 31, 1994.[2] This proposed finding was based on air quality data showing that the Trona area has not recorded any exceedances of the 24-hour and annual PM–10 NAAQS for the 1992–1994 period. *See* 66 FR 31873, 31875–31877.

EPA received comment letters on its June 13, 2001 proposed actions from the Kern County Air Pollution Control District, the Department of the Navy and CARB. Both the Navy and CARB supported changing the boundaries of the Searles Valley NA to create three new nonattainment areas and the attainment finding for the Trona area. EPA received no negative comments on these proposed actions.[3]

III. Today's Action

In today's final action, EPA is dividing the Searles Valley NA into three, newly created NAs: Coso Junction, Indian Wells Valley and Trona. EPA is also finding that the newly created Trona moderate NA attained the 24-hour and annual PM–10 NAAQS by the CAA mandated deadline of December 31, 1994.

IV. Administrative Requirements

Under Executive Order 12866 (58 FR 51735, October 4, 1993), this action is not a ''significant regulatory action'' and therefore is not subject to review by the Office of Management and Budget.

The splitting of the Searles Valley NA into three new, separate NAs with a moderate classification will not impose any new requirements on any sectors of the economy because the area is already classified as moderate. Moreover, under the CAA, a determination that the Trona area has attained the PM–10 national ambient air quality standards is based on an objective review of measured air quality. As such, the nonattainment area split and the attainment determination do not impose any new requirements on any sectors of the economy and do not have any adverse impact on State, local, or tribal governments or communities.

Accordingly, the Administrator certifies that this rule will not have a significant economic impact on a substantial number of small entities under the Regulatory Flexibility Act (5 U.S.C. 601 *et seq.*).

These actions do not contain any unfunded mandate or significantly or uniquely affect small governments, as described in the Unfunded Mandates Reform Act of 1995 (Public Law 104–4) because the division of the Searles Valley NA into three, new and separate NAs with a moderate classification and the determination of attainment for the new Trona area will not impose any new requirements on any sectors of the economy. For the same reason, this rule also does not have a substantial direct effect on one or more Indian tribes, on the relationship between the Federal Government and Indian tribes, or on the

[1] Boundary changes are an inherent part of a designation or redesignation of an area under the CAA. *See* CAA section 107(d)(1)(B)(ii).

[2] On June 13, 2001, EPA also proposed to find that the proposed Indian Wells and Coso Junction NAs have not attained the 24-hour and annual PM–10 NAAQS by December 31, 1994. Today's final rule addresses only the finding concerning the Trona NA. EPA intends to take additional action with respect to the Indian Wells and Coso NAs in future rulemakings.

[3] EPA received a number of comments on its proposed nonattainment findings for the proposed Indian Wells and Coso Junction NAs. The Agency will address these comments in any future rulemakings regarding these proposals.

distribution of power and responsibilities between the Federal Government and Indian tribes, as specified by Executive Order 13175 (65 FR 67249, November 9, 2000). For these same reasons, these actions will not have substantial direct effects on the States, on the relationship between the national government and the States, or on the distribution of power and responsibilities among the various levels of government, as specified in Executive Order 13132 (64 FR 43255, August 10, 1999). These actions are also not subject to Executive Order 13045 (62 FR 19885, April 23, 1997), because they are not economically significant. Finally, for these same reasons, the requirements of section 12(d) of the National Technology Transfer and Advancement Act of 1995 (15 U.S.C. 272 note) do not apply.

As required by section 3 of Executive Order 12988 (61 FR 4729, February 7, 1996), in issuing these actions, EPA has taken the necessary steps to eliminate drafting errors and ambiguity, minimize potential litigation, and provide a clear legal standard for affected conduct. EPA has complied with Executive Order 12630 (53 FR 8859, March 15, 1988) by examining the takings implications of the rule in accordance with the ''Attorney General's Supplemental Guidelines for the Evaluation of Risk and Avoidance of Unanticipated Takings'' issued under the executive order. These actions do not impose an information collection burden under the provisions of the Paperwork Reduction Act of 1995 (44 U.S.C. 3501 *et seq.*).

The Congressional Review Act, 5 U.S.C. 801 *et seq.*, as added by the Small Business Regulatory Enforcement Fairness Act of 1996, generally provides that before a rule may take effect, the agency promulgating the rule must submit a rule report, which includes a copy of the rule, to each House of the Congress and to the Comptroller General of the United States. EPA will submit a report containing this rule and other required information to the U.S. Senate, the U.S. House of Representatives, and the Comptroller General of the United States prior to publication of the rule in the **Federal Register**. A major rule cannot take effect until 60 days after it is published in the **Federal Register**. This action is not a ''major rule'' as defined by 5 U.S.C. 804(2).

Under section 307(b)(1) of the Clean Air Act, petitions for judicial review of this action must be filed in the United States Court of Appeals for the appropriate circuit by October 7, 2002. Filing a petition for reconsideration by the Administrator of this final rule does not affect the finality of this rule for the purposes of judicial review nor does it extend the time within which a petition for Judicial review may be file, and shall not postpone the effectiveness of such rule or action. This action may not be challenged later in proceedings to enforce its requirements. *See* section 307(b)(2).

List of Subjects in 40 CFR Part 81

Environmental protection, Air pollution control, National parks, Wilderness areas.

Dated: July 25, 2002.

Keith Takata,

Acting Regional Administrator, Region IX.

Part 81 of chapter I, title 40 of the Code of Federal Regulations is amended as follows:

PART 81—[AMENDED]

1. The authority citation for part 81 continues to read as follows:

Authority: 42 U.S.C. 7401 *et seq.*

2. In § 81.305 the ''California-PM–10'' table is amended as follows:

a. By adding ''Coso Junction planning area'' as a designated area immediately under the entry ''Inyo County;

b. By revising the entry ''San Bernardino, Inyo and Kern Counties'';

c. By adding ''Indian Wells Valley planning area'' as a designated area immediately under the entry ''Fresno, Kern, Kings, Tulare, San Joaquin, Stanislaus, Madera Counties.''

§ 81.305 California.

* * * * *

CALIFORNIA—PM–10

Designated area	Designation		Classification	
	Date	Type	Date	Type
Inyo County				
Coso Junction planning area	September 5, 2002	Nonattainment	September 5, 2002	Moderate.
That portion of Inyo County contained within Hydrologic Unit #18090205				
* * *	*	*	*	*
San Bernardino County				
San Bernardino (part):				
Excluding that portion located in the Trona planning area, and				
Excluding that area in the South Coast Air Basin				
Trona planning area: That portion of San Bernardino County contained within Hydrolagic Unit #18090285.	September 5, 2002	Nonattainment	September 5, 2002	
* * *	*	*	*	*
Fresno, Kern, Kings, Tulare, San Joaquin, Medera Counties:				
Indian Wells Valley Planning area	September 5, 2002	Nonattainment	September 5, 2002	Moderate
That portions of Kern County contained with Hyrdologic Unit #18090205.				
* * *	*	*	*	*

* * * * *

[FR Doc. 02–19798 Filed 8–5–02; 8:45 am]

BILLING CODE 6560–50–P

ENVIRONMENTAL PROTECTION AGENCY

40 CFR Part 93

[FRL–7256–3]

RIN 2060–AJ70

Transportation Conformity Rule Amendments: Minor Revision of 18-Month Requirement for Initial SIP Submissions and Addition of Grace Period for Newly Designated Nonattainment Areas

AGENCY: Environmental Protection Agency (EPA).

ACTION: Final rule.

SUMMARY: EPA is promulgating two minor revisions to the transportation conformity rule. Transportation conformity is required by the Clean Air Act to ensure that federally supported highway and transit project activities are consistent with (''conform to'') the purpose of a state air quality implementation plan (SIP). Conformity to the purpose of the SIP means that transportation activities will not cause new air quality violations, worsen existing violations, or delay timely attainment of the national ambient air quality standards. EPA's transportation conformity rule establishes the criteria and procedures for determining whether transportation activities conform to the state air quality plan.

First, today's final rule will implement a Clean Air Act amendment that provides a one-year grace period before conformity is required in areas that are designated nonattainment for a given air quality standard for the first time. This Clean Air Act amendment was enacted on October 27, 2000. Although the grace period is already available to newly designated nonattainment areas as a matter of law, EPA is today incorporating the one-year conformity grace period into the conformity rule.

Second, today's final rule will change the point by which a conformity determination must be made following a State's submission of a control strategy implementation plan or maintenance plan for the first time (an ''initial'' SIP submission). Today's rule requires conformity to be determined within 18 months of EPA's affirmative finding that the SIP's motor vehicle emissions budgets are adequate. Prior to today's action, the conformity rule required a new conformity determination within 18 months of the submission of an initial SIP.

This change to the conformity rule better aligns when the 18-month requirement for conformity to initial SIP submissions is implemented, so that state and local agencies have sufficient time to redetermine conformity when initial SIPs are submitted and after EPA finds the SIP budgets adequate.

EFFECTIVE DATE: This final rule is effective on September 5, 2002.

ADDRESSES: Materials relevant to this rulemaking are in Public Docket A–2001–12 located at the U.S. Environmental Protection Agency, 401 M Street, SW., Washington, DC 20460 in Room M–1500, Waterside Mall (ground floor). Ph: 202–260–7548. The docket is open and supporting materials are available for review between 8 a.m. and 5:30 p.m. on all federal government workdays. You may have to pay a reasonable fee for copying docket materials.

This final rule is available electronically from EPA's Web site. *See* **SUPPLEMENTARY INFORMATION** for information on accessing and downloading files.

FOR FURTHER INFORMATION CONTACT: Angela Spickard, State Measures and Conformity Group, Transportation and Regional Programs Division, U.S. Environmental Protection Agency, 2000 Traverwood Drive, Ann Arbor, MI 48105, *spickard.angela@epa.gov,* (734) 214–4283.

SUPPLEMENTARY INFORMATION: You can access and download today's final rule on your computer by going to the following address on EPA's Internet Web site: *http://www.epa.gov/otaq/traq* (Once at the site, click on ''conformity.'').

Regulated Entities

Entities potentially regulated by the transportation conformity rule are those that adopt, approve, or fund transportation plans, programs, or projects under title 23 U.S.C. or title 49 U.S.C. Regulated categories and entities affected by this action include:

Category	Examples of regulated entities
Local government	Local transportation and air quality agencies, including metropolitan planning organizations.
State government	State transportation and air quality agencies.
Federal government	Department of Transportation (Federal Highway Administration (FHWA) and Federal Transit Administration (FTA)) and EPA.

This table is not intended to be exhaustive, but rather provides a guide for readers regarding entities likely to be affected by this rule. This table lists the types of entities of which EPA is aware that could potentially be regulated by the conformity rule. Other types of entities not listed in the table could also be regulated. To determine whether your organization is regulated by this action, you should carefully examine the applicability requirements in 40 CFR 93.102 of the transportation conformity rule. If you have questions regarding the applicability of this action to a particular entity, consult the person listed in the preceding **FOR FURTHER INFORMATION CONTACT** section.

The contents of this preamble are listed in the following outline:

I. Background
II. One-year Conformity Grace Period for Newly Designated Nonattainment Areas
III. Conformity Determinations for Initial SIP Submissions
IV. What Comments That Addressed Topics Other Than Those Covered in This Rulemaking Did We Receive?
V. How Does Today's Final Rule Affect Conformity SIPs?
VI. Administrative Requirements

I. Background

Transportation conformity is required under section 176(c) of the Clean Air Act (42 U.S.C. 7506(c)) to ensure that federally supported highway and transit project activities are consistent with (''conform to'') the purpose of a state air quality implementation plan (SIP). Conformity to the purpose of the SIP means that transportation activities will not cause new air quality violations, worsen existing violations, or delay timely attainment of the national ambient air quality standards. EPA's transportation conformity rule establishes the criteria and procedures for determining whether transportation activities conform to the state air quality plan.

EPA first published the transportation conformity rule on November 24, 1993 (58 FR 62188), and made subsequent minor revisions to the rule in 1995 (60

FR 40098, August 7, 1995, and 60 FR 57179, November 14, 1995). On August 15, 1997, however, EPA published a comprehensive set of amendments that clarified and streamlined language from the 1993 transportation conformity rule and 1995 amendments (62 FR 43780). Since the publication of the 1997 rule, we made one additional minor revision to the conformity rule in 2000 (65 FR 18911, April 10, 2000).

As described in the October 5, 2001, proposal to this final rule (66 FR 50954), EPA's 1995 conformity rule provided a one-year conformity grace period to areas that were designated nonattainment for a given air quality standard for the first time (§ 93.102(d) of the November 14, 1995, final rule; 60 FR 57179). However, this provision was challenged by the Sierra Club under the Clean Air Act as amended in 1990, and the U.S. Court of Appeals for the District of Columbia Circuit overturned the grace period on statutory grounds on November 4, 1997 (*Sierra Club* v. *EPA, et al.,* 129 F. 3d 137, D.C. Cir. 1997). As a result of the court's decision, the one-year conformity grace period was no longer available to areas and EPA removed it from the conformity rule in 2000 (65 FR 18911). Subsequently, Congress amended the Clean Air Act on October 27, 2000, to reinstate the grace period as a matter of law. Today's final rule amends the conformity regulation by reinstating the grace period provision to be consistent with the October 2000 Clean Air Act amendment, and therefore will provide newly designated nonattainment areas with a one-year grace period before the conformity regulation applies.

Today's action also amends the conformity rule to respond, in part, to the impact of a decision made on March 2, 1999, by the U.S. Court of Appeals for the District of Columbia Circuit that affected several provisions of the 1997 rulemaking (*Environmental Defense Fund* v. *EPA, et al.*, 167 F. 3d 641, D.C. Cir. 1999). Specifically, today's final rule addresses the indirect impact of this court decision on one provision of the conformity rule (§ 93.104(e)), the provision that requires conformity to be redetermined within 18 months of an initial SIP submission. In addition to today's minor rule revision, we are currently preparing a future rulemaking to respond to the remaining issues addressed by the March 1999 court decision that will be separately proposed in the **Federal Register**.

In the interim, areas where conformity applies are currently operating under administrative guidance that EPA and the U.S. Department of Transportation (DOT) issued to address the provisions directly affected by the court decision. See EPA's web site listed in the **SUPPLEMENTARY INFORMATION** section to download an electronic version of EPA's May 14, 1999, and DOT's January 2, 2002, memoranda implementing the March 1999 court decision.

Today's final rule is based on the October 5, 2001, proposed rule entitled, ''Transportation Conformity Rule Amendments: Minor Revision of 18-month Requirement for Initial SIP Submissions and Addition of Grace Period for Newly Designated Nonattainment Areas'' (66 FR 50954) and comments received on that proposal. The public comment period for the proposed rule ended on November 5, 2001. EPA received twelve public comments on the proposed rule from metropolitan planning organizations, state transportation and air quality agencies, and an environmental group.

This final rule makes two minor changes to the October 5, 2001, proposed rule that further clarify the applicability of the one-year conformity grace period to newly designated nonattainment areas. No other modifications to the proposed rule, however, have been made in today's final rule. EPA will not restate here its rationale for the changes to the conformity rule that are identical to the October 5 proposal. The reader is referred to the proposal notice for such discussions.

II. One-year Conformity Grace Period for Newly Designated Nonattainment Areas

A. What Are We Finalizing?

Today, EPA is adding the existing one-year conformity grace period for newly designated nonattainment areas for a given air quality standard to the transportation conformity rule. We are finalizing this change to make the transportation conformity rule consistent with an October 27, 2000, amendment to the Clean Air Act (42 U.S.C. 7506(c)(6)).

Specifically, the October 2000 amendment provides areas, that for the first time are designated nonattainment for a given air quality standard, with a one-year grace period before the conformity regulation applies with respect to that standard. This grace period begins upon the effective date of EPA's published notice in the **Federal Register** that designates an area as nonattainment. Although today's final rule incorporates the grace period into the transportation conformity rule, it has been available to newly designated nonattainment areas as a matter of law since Congress enacted the October 2000 amendment to the Act. For more information on what defines a ''newly designated'' nonattainment area, see the October 5, 2001, proposal to today's rulemaking.

B. How Soon Does Conformity Apply in a Newly Designated Nonattainment Area?

Under the current Clean Air Act as amended in October 2000, conformity applies one year after EPA first designates an area or portion of an area as nonattainment for a given air quality standard. More specifically, conformity applies one year after the effective date of EPA's final nonattainment designation, as published in the **Federal Register**.

Therefore, one year after the effective date of EPA's designation of an area to nonattainment for the first time for a given standard, metropolitan areas must have a conforming transportation plan and Transportation Improvement Program (TIP) in place to fund or approve transportation projects. If, at the conclusion of the one-year grace period, a metropolitan area is not able to make a conformity determination for its plan and TIP, the area will be in what is known as a ''conformity lapse.''

In the absence of a conforming transportation plan and TIP, no new project-level conformity determinations may be made. According to existing guidance, during a conformity lapse exempt projects listed in § 93.126 (*e.g.,* safety projects), projects listed in § 93.127 and § 93.128, and project phases that have received all applicable funding commitments or approvals from the FHWA, FTA or state and local authorizing agencies can proceed toward implementation. Transportation control measures (TCMs) that EPA has approved into a SIP can also proceed during a lapse. TCMs are projects that support air quality goals by reducing travel or relieving congestion.

The transportation plan and TIP must conform with respect to all pollutants for which the area is designated nonattainment to end the conformity lapse. Transportation conformity applies in areas that are designated nonattainment or maintenance for ozone, carbon monoxide, particulate matter, and nitrogen dioxide. For example, a carbon monoxide nonattainment area that is subsequently designated nonattainment for ozone has a one-year grace period before conformity determinations must be made for ozone; conformity would continue to apply in the interim for carbon monoxide. By the end of the one-year grace period, a conforming

transportation plan and TIP must be in place for all pollutants in a given area, in this case, for carbon monoxide and ozone.

C. What Comments Did We Receive?

In general, commenters supported amending the conformity rule to include the one-year conformity grace period for newly designated nonattainment areas. Most commenters believe that newly designated areas, especially those with little or no conformity experience, need the additional time to evaluate their long range transportation plans, TIPs and projects, and to complete the conformity process. Although the grace period has been available to newly designated areas since the enactment of the October 2000 Clean Air Act amendment, several commenters felt that its inclusion into the conformity rule will help to reduce confusion and provide assurance to future newly designated areas.

Though most commenters agreed with amending the conformity rule to include the one-year grace period, some commenters argued that one year is not enough time to complete the transportation planning and conformity processes when an area becomes designated nonattainment for a given air quality standard for the first time. Some of these commenters believe that a longer grace period of three years is more appropriate.

The October 2000 Clean Air Act amendment specifically provides newly designated areas with a one-year grace period, after which conformity applies. Therefore, we believe that the statutory language precludes EPA from extending the conformity grace period beyond one year for new areas. We should also emphasize, however, that areas will have prior notification of their pending designation well before the **Federal Register** notice announcing their designation is published. We encourage areas to use the time provided by the designation process to begin preparing themselves for implementing the conformity regulation.

One commenter also requested that EPA consider delaying the effective date of designation to 60–90 days after a **Federal Register** notice is published, so that areas will have more time beyond the one-year grace period to meet the conformity requirements. Generally, the amount of time between publication and effective date is established through EPA's administrative discretion on a case-by-case basis. Therefore, we do intend to consider how areas are designated, particularly for areas designated under new air quality standards, so that the transition to implementing the conformity regulation will be reasonable. Furthermore, as previously stated, the designation process will provide areas advanced notification of their pending designation. Areas should use this additional time prior to the one-year conformity grace period to prepare for the implementation of the conformity regulation and other Clean Air Act requirements. EPA can not now determine the appropriate effective date for all future designations, but will continue to do so, as appropriate on a case-by-case basis, in the course of future designation rulemaking.

Finally, EPA received a comment questioning whether the proposed rule text included in our October 5, 2001, proposal is consistent with the statutory language in the Clean Air Act, section 176(c)(6). Specifically, one commenter suggested that the proposed rule language does not incorporate the limitation that the one-year grace period only applies to areas that are designated nonattainment for a given pollutant for the ''first'' time. This commenter argued that the Clean Air Act precludes the availability of the grace period to areas that were once nonattainment for a standard, redesignated to attainment under Clean Air Act section 107(d)(3), but then designated back to nonattainment because they again violated the same air quality standard.

EPA agrees with this commenter's interpretation of the statutory language; we do not believe that the grace period is available to areas that are designated nonattainment for a given pollutant and standard more than one time. The preamble to the October 5, 2001, proposal further supports this limitation by stating that the conformity grace period is not available to areas that have been previously designated nonattainment for a given pollutant and standard.

Although EPA continues to believe that the proposed regulatory language for § 93.102(d) is consistent with the Clean Air Act, we are finalizing two minor clarifying changes to the proposed rule to ensure that the grace period is correctly implemented. Specifically, we have clarified in the final rule language that the grace period is only available to areas that have been ''continuously'' designated attainment for a given standard since 1990, or have not been designated at all for a given standard for that same period. In addition, we specify that for areas that are designated nonattainment for the first time for a given air quality standard, the one-year conformity grace period only applies ''with respect to that standard.'' These minor clarifications ensure that the regulatory language limits the applicability of the one-year grace period to only areas that have been designated nonattainment for a given pollutant and standard for the first time, and therefore, is consistent with our interpretation and implementation of the Clean Air Act section 176(c)(6). EPA believes that a reproposal is not necessary to incorporate these minor clarifying changes in today's final rule, as these clarifications are consistent with EPA's original intentions and stakeholders' understanding of the proposed regulatory language.

III. Conformity Determinations for Initial SIP Submissions

A. What Are We Finalizing?

As in the proposed rule, this final rule revises § 93.104(e)(2) to change the trigger point or starting point of the requirement to determine conformity after an initial SIP submission is made. With this rule change, conformity must be determined within 18 months of the effective date of the **Federal Register** notice announcing EPA's finding that the budgets in an initial SIP submission are adequate. Today's action changes the 1997 conformity rule that required conformity to be determined within 18 months of the submission date for an initial SIP. The net effect is that areas will have the full 18 months to satisfy the conformity requirement for initial submissions once adequate budgets have become available for conformity. EPA is promulgating this minor rule revision to provide a reasonable response to an indirect impact of the March 2, 1999, court decision that requires EPA to first find the budgets from an initial SIP submission adequate before such budgets can be used in a conformity determination.

Today's final rule will also change the starting point for 18-month clocks that are currently running for areas with initial SIP submissions, so that these areas are given the full 18 months to determine conformity to their initial SIPs. In other words, in areas where a SIP has been submitted and EPA is currently reviewing it for adequacy, the 18-month clock required by § 93.104(e)(2) will not start until the effective date of our adequacy finding (*i.e.*, today's action voids the current 18-month clock that started from the SIP submission date for these areas). If we are currently reviewing the adequacy of a submitted SIP, and subsequently find it inadequate, the 18-month clock will not start because today's rule requires EPA to first find budgets in initial SIP submissions adequate before § 93.104(e)(2) applies. Finally, for areas

that have submitted initial SIPs that EPA has already found adequate and to which conformity has not yet been determined, this final rule will restart the 18-month clock from the effective date of EPA's positive adequacy finding.

Consistent with the proposed rule, today's final rule will not require an 18-month clock to begin if budgets from an initial SIP submission are found inadequate. Furthermore, this rule will void any 18-month clocks that are running for initial SIP submissions that EPA finds adequate, but subsequently finds inadequate before a conformity determination is made, at the time that EPA finds such budgets inadequate.

Today's action does not change the current requirement to redetermine conformity for each initial SIP that is submitted for a given pollutant, standard, and Clean Air Act requirement. For example, an 18-month clock will still be triggered for the first attainment demonstration that an area submits and EPA subsequently finds adequate, as well as for the first rate-of-progress SIP for a given year and maintenance plan that is submitted and found adequate. Today's rule changes only the date on which these 18-month clocks begin to run.

In addition, today's action does not change the current rule's requirement that an area need only satisfy the 18-month requirement to determine conformity to an initial SIP submission once for a given Clean Air Act requirement. Once § 93.104(e)(2) is satisfied, areas do not have to satisfy this requirement again for subsequent submissions of the same type prior to EPA SIP approval. EPA believes that the requirement to update conformity every three years (40 CFR 93.104), along with other transportation planning and conformity requirements, provides sufficient additional opportunity for periodically introducing new air quality information into the conformity process. Furthermore, this action does not change the conformity rule's requirement of 40 CFR 93.104(e)(3); areas are still required to demonstrate conformity within 18 months of EPA's approval of a SIP containing revised budgets.

Finally, as indicated in the proposal, today's final rule will not affect those SIPs that are submitted to reflect additional control measures or to update MOBILE5 interim estimates of federal Tier 2 vehicle and fuel standards with MOBILE6. EPA has already stated that these SIP revisions are not initial SIP submissions that start 18-month clocks under 40 CFR 93.104(e)(2). EPA addressed this issue in the July 28, 2000, supplemental notice of proposed rulemaking (65 FR 46386) for certain ozone attainment areas.

For more information on what defines an ''initial SIP submission,'' see the October 5, 2001, proposal to today's final rule.

B. Why Is This Rule Change Necessary?

Today's rule change is necessary because it provides a reasonable response to an indirect impact of the March 2, 1999, court decision. In its March 1999, decision, the court ruled that EPA must first find newly submitted motor vehicle emissions budgets adequate before such budgets can be used in a conformity determination. An effect of the combination of the court decision and EPA's previous rule was that a significant portion of the 18-month period for demonstrating conformity could elapse prior to the time EPA made a determination that the submitted budgets were adequate.

As described in our May 14, 1999, guidance implementing the court's decision, EPA's current adequacy process for a newly submitted initial SIP starts when the SIP is submitted and ends with the effective date of our adequacy finding, which we formally announce through a **Federal Register** notice. EPA tries to complete an adequacy review in approximately three months, although in some cases additional time is needed. During the adequacy review period, the public is provided at least 30 days to comment on the appropriateness of the newly submitted budgets. EPA must then address all comments received for the submitted budgets before we can make our adequacy finding. Areas cannot begin the process of determining conformity using the submitted budgets with certainty until EPA has determined that the budgets are adequate.

Under the conformity rule prior to today and the court decision, a conformity determination cannot be made until budgets are found adequate, and therefore, transportation agencies should not be expected to invest valuable time and resources completing a regional emissions analysis and conformity determination prior to knowing which SIP budgets apply. As a result, under the prior rule, areas had a maximum of 15 months to determine conformity following an initial SIP submission (*i.e.,* the 18-month conformity clock for initial submissions minus the three months minimally required for EPA to determine adequacy). Where adequacy review was complex and subsequently delayed, particularly in situations with significant public involvement, areas may have had even less time to determine conformity under the previous rule. As a consequence, the shortening of the 18-month period by the amount of time needed for the adequacy review process could lead to significant difficulties for those that implement the conformity program.

If budgets cannot be used until EPA completes its adequacy review and the finding becomes effective, the 18-month clock for conformity should not start until that time. EPA believes this rule change is reasonable and necessary, given that this additional time needed for adequacy review was not contemplated when the original 18-month initial SIP conformity requirement was established.

There can also be situations where EPA finds submitted budgets adequate, but later finds them inadequate because new information has become available that affects the adequacy of the budgets. In these situations, conformity implementers may try in good faith to determine conformity to adequate budgets in an initial SIP submission within 18 months, only to have the budgets found inadequate before a conformity determination is made.

To address the situations described above and based on our experience in implementing conformity to date, EPA continues to believe that areas should have the full 18 months to determine conformity. In these cases, an 18-month period provides areas with the time needed to assess new information contained in a SIP, perform additional emissions analyses and provide the public with an opportunity to review new changes to the transportation plan and TIP and conformity determination. We continue to encourage air quality and transportation planners to coordinate their processes so that new air quality plans can be used expeditiously in the transportation conformity and planning processes.

For more information on EPA's adequacy process for initial SIP submissions, *see* the **SUPPLEMENTARY INFORMATION** section in this final rule to download a copy of EPA's May 14, 1999 memorandum implementing the court's decision.

C. What Comments Did We Receive?

The majority of commenters agreed that the 18-month requirement for conformity to initial SIP submissions should be aligned with EPA's adequacy finding for such submitted budgets. Most commenters supported this rule change, as it will allow for greater certainty in the conformity process and will provide transportation planners sufficient time to incorporate new

information into the transportation planning and conformity processes.

One commenter, however, believed that the proposed rule is arbitrary and capricious because it could potentially delay implementing new budgets in nonattainment areas where expeditious emissions reductions are necessary to meet statutory requirements and deadlines. The commenter asserted that 18 months is an excessive amount of time to allow for a revision of the plan and TIP to take place, and that the time frame for redetermining conformity when new budgets become available should be tailored to the time remaining before a required milestone or attainment year.

In addition, the commenter stated that EPA's proposal is inconsistent with the Clean Air Act's requirements for how often conformity determinations should be conducted. The commenter acknowledged that Clean Air Act section 176(c)(4)(B)(ii) provides EPA discretion in determining the frequency of conformity determinations, but believed that EPA must also consider Congress' intention to have transportation agencies be ''active players'' in implementing the emission reductions required for reasonable further progress or attainment. The commenter cited Congressional records from the development of the 1990 Clean Air Act that stated that transportation activities can only be accepted by DOT if they are consistent with the SIP's air quality goals; if a transportation plan and TIP does not meet the emissions targets set by the SIP and further motor vehicle emission reductions are needed to reach attainment, the plan and TIP must be modified to achieve the SIP's budgets.

EPA does not agree that the final rule will further delay the use of new budgets in the transportation planning and conformity processes. We are finalizing today's rule change to provide a reasonable response to an indirect effect of the March 2, 1999, court decision that requires EPA to formally review and find initially submitted budgets adequate before they can be used in a conformity determination. As a result of the court's ruling, we do not believe that starting an 18-month clock from the submission of a budget that may or may not be adequate and available for use for conformity purposes is environmentally sensible. We believe that good air quality results will be most effectively achieved by ensuring that new budgets are consistent with timely attainment or maintenance through the adequacy process before requiring their use in the transportation planning and conformity processes.

EPA also believes that the final rule is consistent with the Clean Air Act. While EPA agrees that the Clean Air Act requires transportation activities to conform to the SIP before federal funding and approval occurs and that the latest SIP budget should be used in such a conformity determination, the Clean Air Act does not specifically require conformity determinations to be done more often than every three years. Clean Air Act section 176(c)(4)(B) requires EPA to promulgate conformity procedures and criteria that ''shall, at a minimum, * * * address the appropriate frequency for making conformity determinations, but in no case shall such determinations for transportation plans and programs be less frequent than every three years * * *''

EPA established the frequency requirements for conformity determinations covered by 40 CFR 93.104 in previous rulemakings, including the requirements to determine plan/TIP conformity within 18 months of certain SIP actions (*e.g.,* initial SIP submissions, EPA SIP approvals). The conformity rule's frequency requirements meet the statutory minimum and, along with the requirement that new plans, TIPs, and plan/TIP amendments must demonstrate conformity before they can be implemented in between 3-year update cycles, provide sufficient opportunities for reevaluating plans and TIPs in relation to new SIPs, especially in areas that have more significant air quality challenges. Therefore, even in cases where EPA's adequacy findings require more than three months to complete, existing conformity and transportation planning requirements provide a safeguard to prevent negative impacts on air quality.

Moreover, areas typically begin considering new air quality information during the transportation planning process prior to EPA's formal adequacy finding for initial SIP submissions, as our pending adequacy finding on newly submitted budgets may necessitate additional emissions reductions or alterations to an area's current plan and TIP. In other words, transportation planners frequently become aware through early consultation with their air quality partners of when new, more stringent budgets are being developed, and thus, have the opportunity to consider changes to the transportation plan and TIP to ensure conformity to those new budgets in the future. Therefore, EPA continues to believe that the iterative nature of the conformity and transportation planning processes, along with early and effective interagency consultation, allows for new transportation activities to be continuously evaluated to ensure that attainment is not delayed.

Furthermore, it is important to understand the role that transportation conformity plays in ensuring clean air. The transportation conformity process is one of many mechanisms established by the Clean Air Act for protecting public health. Although transportation conformity ensures that the SIP's motor vehicle emissions targets are achieved through the transportation planning process, air quality planners and EPA are primarily responsible for ensuring that SIPs containing sufficient emissions reductions to meet applicable air quality requirements are developed according to statutory requirements and are available in the transportation planning process in a timely manner.

This rule change will not have a significant impact on air quality because it in no way affects the overall statutory requirements and deadlines established to attain the air quality standards. The Clean Air Act defines the dates by which nonattainment areas must attain the air quality standards. It is the responsibility of EPA and the state and local air quality agencies to ensure that SIPs can achieve the necessary reductions to meet these deadlines, taking into account, among other factors, control measure implementation schedules and the timing of conformity.

EPA also believes that the suggested approach of tailoring the amount of time that an area has to redetermine conformity with the amount of time remaining before an area's next required milestone or attainment year would lead to inconsistencies and confusion in implementing the conformity rule. Moreover, the practical implementation of adjusting the time allowed to redetermine conformity following the submission of each initial SIP would introduce a great deal of uncertainty in the air quality and transportation planning processes, and would be logistically difficult and burdensome to implement.

Transportation conformity is a process that coordinates two different planning processes—transportation and air quality planning. As a result, EPA has an obligation to balance the need to incorporate new air quality planning information and the need of transportation planners to have sufficient time to incorporate this new information into their planning process. We believe that today's rule change regarding the conformity requirement for initial SIP submissions will achieve

this balance, as well as remain within the boundaries of the statutory requirements.

The same commenter also claimed that EPA provided no rational basis in the proposal for providing areas with an 18-month time period for redetermining conformity to an initial SIP submission. Alternatively, the commenter suggested providing areas with a shorter time period of nine months to meet the conformity requirement for initial SIP submissions, particularly when the time between submission of a SIP budget and a statutory attainment or reasonable further progress deadline is less than 24–36 months, or when such deadlines have not been met. According to the commenter, expediting conformity determinations in these situations would ensure that motor vehicle emissions control measures, such as transportation control measures and transit capital investments, will be in place in time to achieve necessary emissions reductions.

EPA does not believe that the role of conformity, or of this rule change in particular, is to facilitate emissions reductions in the manner in which this commenter has suggested. The conformity provisions of the statute merely require that transportation activities conform to the SIP, and that such determinations include new transportation activities and are conducted at least every three years.

For this rulemaking, EPA did not propose extending or reducing the 18-month time period that is already provided to areas to redetermine conformity to initially submitted SIPs under existing federal rules. The 18-month time period for initial SIP submissions was established through the November 14, 1995, final rule (60 FR 57182). When EPA promulgated this rulemaking, we concluded that 18-months was an appropriate time frame in which to incorporate new SIP submissions into the transportation planning process. Since that time, no new information has indicated that the 18-month time period is inappropriate, as explained further below. Today's final rule only changes the starting point of the 18-month time period for initial SIP submissions. This change is needed to response to an indirect impact of the March 2, 1999, court decision in which the court ruled that budgets could not be used for conformity purposes until EPA has found them adequate.

Moreover, from EPA's experience implementing the conformity rule to date, providing areas with 18 months to determine conformity to new SIP budgets is a reasonable time period, given the amount of time, resources and public participation that is required for the transportation planning and conformity processes. Prior to our November 14, 1995, amendment to the conformity rule, areas only had 12 months to redetermine conformity to an initial SIP submission. Due to the overwhelming difficulties areas had in meeting these 12-month clocks, EPA proposed, considered public comment, and finalized extending the conformity requirement for initial SIP submissions to 18 months. As a result, EPA continues to believe that 18 months from an initial SIP conformity trigger for all areas is the most reasonable and workable time frame for redetermining conformity to initial SIPs. For more information regarding EPA's rationale and response to comments for extending the initial SIP conformity trigger to 18 months, see our November 1995 rulemaking. An electronic version of this rulemaking can be downloaded from EPA's web site listed in the **SUPPLEMENTARY INFORMATION** section of this rule.

In addition, EPA believes that the existing transportation and air quality planning requirements do ensure that motor vehicle control measures that are approved into a SIP are implemented in such a manner that achieves the necessary emissions reductions in a timely fashion. Therefore, we do not believe that conformity determinations need to be expedited specifically for this purpose. Clean Air Act sections 174(a) and 176(c)(4) require the inclusion of transportation planners in the SIP development process and the formal establishment of consultation procedures among state and local transportation and air quality agencies involved in the conformity process, respectively. This required consultation among transportation and air quality agencies is intended to ensure that the transportation planning process becomes a routine component of any analysis (*e.g.,* determining implementation schedules, evaluating emissions benefits, *etc.*) involving transportation control measures slated for inclusion in a SIP. Furthermore, as a practical matter, transportation projects, including those that have emissions reduction benefits, cannot receive federal funding or approval unless they are contained in a fiscally constrained and conforming transportation plan and TIP that has been approved through the transportation planning process, pursuant to 23 CFR part 450 and 49 CFR part 613. Therefore, these transportation and air quality planning requirements ensure that any transportation measure that EPA approves into a SIP has been coordinated through the transportation planning process and is designed to timely reduce emissions in accordance with the SIP's purpose of achieving further progress, attainment or maintenance.

The same commenter expressed concern over not requiring a new 18-month clock when a conformity determination is made using budgets that EPA has found adequate, but not yet approved, prior to a subsequent submission of new, more stringent budgets for the same Clean Air Act requirement. In this particular case, the commenter believes that § 93.104(e)(2) should be triggered again, thus requiring areas to revise their plan and TIP to conform to the newly submitted revised budgets upon EPA's adequacy finding. By not requiring § 93.104(e)(2) to apply in this situation, the commenter argues that this rule will sever the link between the conformity process and the obligation of transportation agencies to revise plans and TIPs to achieve the Clean Air Act's objectives.

EPA disagrees. EPA did not propose the additional 18-month requirement for the unique situation the commenter describes, and therefore can not address this issue in today's final rule. Moreover, this suggested requirement is contrary to the historic position that EPA has held on this issue, as described in the preamble to our August 29, 1995 proposed rulemaking initially establishing the 18-month requirement (60 FR 44792). In that proposal to extend the conformity requirement for initial SIP submissions to within 18 months of their submissions, EPA states: ''If conformity to the initial submission has been demonstrated and that submission is subsequently revised, no 18-month clock would start until * * * the SIP is approved by EPA.'' EPA's intent and implementation of § 93.104(e)(2) of the conformity rule has always been to serve as a one-time conformity requirement for initial SIP submissions, so that areas can use new motor vehicle emissions budgets in a conformity determination when no budgets for a particular year and/or purpose had previously existed. Historically, we have never considered § 93.104(e)(2) to be an iterative requirement that mandates continual conformity updates outside of the normal transportation planning process. Therefore, EPA continues to maintain that once conformity is determined and § 93.104(e)(2) is satisfied for a SIP having a given purpose (*e.g.,* attainment, rate-of-progress, maintenance), it is not necessary for areas to meet this requirement again for subsequent

submissions of the same type of SIP prior to EPA's approval. Areas will again be required to determine conformity within 18 months of EPA's approval of any revised budgets. However, in this situation, if new transportation activities are proposed after EPA finds the revised budgets adequate, but before SIP approval, a conformity determination based on the revised budgets along with all other applicable budgets would be required before such activities could be implemented. In other words, the revised budgets must be used (along with all other existing applicable budgets) in any determination after they have been found adequate, even though they are not subject to a new 18-month clock, pursuant to § 93.104(e)(2).

Furthermore, we do not agree that the integration of air quality and transportation planning via the conformity process will be compromised as a result of implementing § 93.104(e)(2) as a one-time requirement for each initial SIP consistent with the current rule. Due to the iterative nature of the transportation planning and conformity processes, the most current air quality information is incorporated on a regular and consistent basis. The three-year conformity requirement for transportation plans and TIPs, along with other transportation planning and conformity requirements, provides for the reasonable and timely introduction of the most current information into the conformity process.

The same commenter also requested from EPA a clarification that § 93.118(a) requires a conformity determination for a plan and TIP to show consistency with all applicable adequate and approved budgets at the time a conformity determination is made. EPA agrees that this requirement applies for all conformity determinations, including those made for TIPs that rely on a previous emissions analysis pursuant to § 93.122(e).

Like all conformity determinations, a determination for a TIP that relies on a previous emissions analysis must satisfy the emissions test requirements of § 93.118 (or § 93.119, if no applicable adequate or approved budgets exist), and must do so over the time frame of the transportation plan. EPA agrees with this clarification of § 93.118(a) and its requirement for demonstrating conformity using all applicable budgets, and will consider elaborating on this proposed clarification in a future rulemaking. Since EPA did not propose such a change, EPA is not making any changes in this final rule with regard to the described interpretation of § 93.118(a). Nonetheless, EPA reiterates that this clarification is the intent of the existing rule.

Finally, one commenter indicated that the October 2001 proposal was not clear as to how the one-year conformity grace period and the 18-month requirement for initial SIPs relate to one another. From the commenter's reading of the proposed rule amendments, it appeared that the one-year grace period and 18-month requirement for initial SIP submissions overlap.

In response, the one-year conformity grace period and the 18-month conformity requirement for initial SIPs are not interrelated. Typically, when areas are newly designated they do not have a submitted SIP for which an 18-month clock would start. In the unique situation where an area is newly designated and submits an initial SIP during the one-year grace period, conformity of the plan and TIP would still need to be demonstrated at the conclusion of the one-year grace period. If EPA has found adequate or approved the submitted SIP and budgets before the grace period expires, those adequate or approved budgets must be used for conformity. Therefore in this situation, both conformity requirements—a conforming plan and TIP one year after designation and the 18-month conformity requirement for the submitted SIP—would be satisfied if a conformity determination using the adequate or approved budgets is made prior to the expiration date of the one-year grace period.

If no adequate or approved budgets exist at the time that the one-year grace period expires, areas should use the conformity test(s) that EPA has deemed appropriate for satisfying the conformity requirement. EPA is currently considering what conformity test(s) will apply for areas that are designated nonattainment under new air quality standards (*e.g.*, EPA's ozone and particulate matter standards issued in 1997) and will address this issue in future guidance documents and rulemakings prior to area designations. In this situation, an 18-month conformity clock pursuant to § 93.104(e)(2) as amended today would not start until these areas submit an initial SIP and EPA has found the submitted budgets adequate for conformity purposes.

IV. What Comments That Addressed Topics Other Than Those Covered in This Rulemaking Did We Receive?

Several commenters raised concerns about aspects of the transportation conformity rule that are not germane to this specific rulemaking, including the implementation of the conformity regulation under EPA's new 8-hour ozone and PM–2.5 (particulate matter with an aerodynamic diameter less than or equal to a nominal 2.5 micrometers) standards, and the impact of the March 2, 1999, court decision on projects that can proceed during a conformity lapse. These comments do not affect whether EPA should proceed with this final action, but EPA will be considering these comments when we develop policy guidance and future rulemakings to address these larger issues.

In addition, one commenter requested that EPA consider eliminating two additional conformity SIP triggers required in § 93.104(e). Specifically, the commenter requested that we eliminate the 18-month conformity frequency requirements for SIP approvals that establish new budgets (§ 93.104(e)(3)) and for SIP approvals that revise TCMs (§ 93.104(e)(4)). This commenter characterized these additional SIP requirements as being superfluous and onerous to the transportation planning process.

For today's rulemaking, EPA did not propose eliminating the conformity triggers outlined in 93.104(e)(3) and 93.104(e)(4), nor have we provided the public with an opportunity to comment on the suggested deletion of these provisions from the conformity rule. Therefore, we are not making any changes to these requirements at this time. However, we will consider this flexibility, along with others, for future rulemakings. A complete response to comments documents is in the docket for this rulemaking (see **ADDRESSES** for more information regarding the docket and additional documents relevant to this rulemaking).

V. How Does Today's Final Rule Affect Conformity SIPs?

Clean Air Act section 176(c)(4)(C) requires states to submit revisions to their SIPs to reflect the criteria and procedures for determining conformity. Section 51.390(b) of the conformity rule specifies that after EPA approves a conformity SIP revision (including those that have been approved as a Memorandum of Understanding or Memorandum of Agreement), the federal conformity rule no longer governs conformity determinations (for the parts of the rule that are covered by the approved conformity SIP). In some areas, EPA has already approved conformity SIPs that include § 93.104(e)(2) from the 1997 transportation conformity rule (62 FR 43780). In these areas, today's final rule changes will be effective only when EPA approves a conformity SIP revision

that includes the amendment to align the 18-month clock for initial SIP submissions with EPA's adequacy finding. EPA will work with states as appropriate to approve such revisions as expeditiously as possible through flexible administrative techniques such as parallel processing and direct final rulemaking to insure that all areas will be able to benefit from this rule change in a timely manner.

In some areas, however, EPA may have approved such provisions in error, if EPA had approved a conformity SIP that included § 93.104(e)(2) after the March 2, 1999, court decision, but prior to today. In these areas, EPA will publish, as appropriate, a technical correction in the **Federal Register** under section 110(k)(6) of the Clean Air Act to limit EPA's approval of such SIPs and clarify that § 93.104(e)(2) should not have been approved into a conformity SIP since the court's ruling indirectly affected this provision by requiring EPA to find submitted budgets adequate before the initial SIP requirement could be satisfied. Once EPA has corrected its approval of such SIPs to exclude the state's version of § 93.104(e)(2), these areas will become subject to the amended version of § 93.104(e)(2) and 18 month clocks will immediately begin to run from EPA's adequacy determination rather than from the submission date of an initial SIP.

In contrast, the one-year conformity grace period currently applies as a statutory matter for all newly designated nonattainment areas, including areas that have EPA-approved conformity SIPs, since this grace period was required as a matter of law once the Act was amended even prior to today's final rule.

VI. Administrative Requirements

A. Executive Order 12866

Under Executive Order 12866, [58 FR 51735 (October 4, 1993)] the Agency must determine whether the regulatory action is ''significant'' and therefore subject to OMB review and the requirements of the Executive Order. The Order defines significant ''regulatory action'' as one that is likely to result in a rule that may:

(1) Have an annual effect on the economy of $100 million or more, or otherwise adversely affect in a material way the economy, a sector of the economy, productivity, competition, jobs, the environment, public health or safety, or state, local, or tribal governments or communities;

(2) create a serious inconsistency or otherwise interfere with an action taken or planned by another agency;

(3) materially alter the budgetary impact of entitlements, grants, user fees, or loan programs or the rights and obligations of recipients thereof;

(4) raise novel legal or policy issues arising out of legal mandates, the President's priorities, or the principles set forth in the Executive Order.

It has been determined that this final rule is not a ''significant regulatory action'' under the terms of Executive Order 12866 and is therefore not subject to OMB.

B. Paperwork Reduction Act

This final rule does not impose any new information collection requirements from EPA that require approval by OMB under the Paperwork Reduction Act of 1980, 44 U.S.C. 3501 *et seq.* An Agency may not conduct or sponsor, and a person is not required to respond to a collection of information, unless it displays a currently valid OMB control number.

Burden means the total time, effort, or financial resources expended by persons to generate, maintain, retain, or disclose or provide information to or for a federal agency. This includes the time needed to review instructions; develop, acquire, install and utilize technology and systems for the purposes of collecting, validating, and verifying information, processing and maintaining information, and disclosing and providing information; adjust the existing ways to comply with any previously applicable instructions and requirements; train personnel to be able to respond to a collection of information; search data sources; complete and review the collection of information; and transmit or otherwise disclose the information.

C. Regulatory Flexibility Analysis

The Regulatory Flexibility Act, as amended by the Small Business Regulatory Enforcement Fairness Act of 1996, requires the Agency to conduct a regulatory flexibility analysis of any significant impact a rule will have on a substantial number of small entities. Small entities include small businesses, small not-for-profit organizations and small government jurisdictions.

EPA has determined that today's rule will not have a significant impact on a substantial number of small entities. This regulation directly affects federal agencies and metropolitan planning organizations that by definition, are designated only for metropolitan areas with a population of at least 50,000. These organizations do not constitute small entities. The Regulatory Flexibility Act defines a ''small governmental jurisdiction'' as the government of a city, county, town, school district or special district with a population of less than 50,000.

Therefore, as required under section 605 of the Regulatory Flexibility Act, 5 U.S.C. 601 *et seq.*, I certify that this final rule will not have a significant economic impact on a substantial number of small entities.

D. Unfunded Mandates

Title II of the Unfunded Mandates Reform Act of 1995 (UMRA), Public Law 104–4, establishes requirements for Federal agencies to assess the effects of their regulatory actions on State, local and tribal governments and the private sector. Under section 202 of the UMRA, EPA generally must prepare a written statement, including a cost-benefit analysis, for proposed and final rules with ''Federal mandates'' that may result in expenditures to State, local, and tribal governments, in the aggregate, or to the private sector, of $100 million or more in any one year. Before EPA promulgates a rule for which a written statement is needed, section 205 of the UMRA generally requires EPA to identify and consider a reasonable number of regulatory alternatives and adopt the least costly, most cost-effective or least burdensome alternative that achieves the objectives of the rule. The provisions of section 205 do not apply when they are inconsistent with applicable law. Moreover, section 205 allows EPA to adopt an alternative other than the least costly, most cost-effective or least burdensome alternative if the Administrator publishes with the final rule an explanation of why that alternative was not adopted. Before EPA establishes any regulatory requirements that may significantly or uniquely affect small governments, including tribal governments, it must have developed under section 203 of the UMRA, a small government agency plan. The plan must provide for notifying potentially affected small governments, enabling officials of affected small governments to have meaningful and timely input in the development of EPA regulatory proposals with significant Federal intergovernmental mandates, and informing, educating, and advising small governments on compliance with the regulatory requirements.

EPA has determined that this final rule does not contain a Federal mandate that may result in expenditures of $100 million or more for State, local, and tribal governments, in the aggregate, or the private sector in any one year. These rule amendments simplify the conformity rule and make it more practicable to implement, in accordance with the Clean Air Act and our

reasonable and thoughtful approach to an indirect impact of the court's decision. They do not impose any additional burdens. Thus, today's proposed rule is not subject to the requirements of sections 202 and 205 of the UMRA and EPA has not prepared a statement with respect to budgetary impacts.

E. National Technology Transfer and Advancement Act

Section 12(d) of the National Technology Transfer and Advancement Act of 1995 (''NTTAA''), Public Law No. 104–113, section 12(d) (15 U.S.C. 272 note) directs EPA to use voluntary consensus standards in its regulatory activities unless to do so would be inconsistent with applicable law or otherwise impractical. Voluntary consensus standards are technical standards (*e.g.,* materials specifications, test methods, sampling procedures, and business practices) that are developed or adopted by voluntary consensus standard bodies. The NTTAA directs EPA to provide Congress, through OMB, explanations when the Agency decides not to use available and applicable voluntary consensus standards.

This rulemaking does not involve technical standards. Therefore, the use of voluntary consensus standards does not apply to this final rule.

F. Executive Order 13045

Executive Order 13045: ''Protection of Children from Environmental Health Risks and Safety Risks'' (62 FR 19885, April 23, 1997) applies to any rule that: (1) Is determined to be ''economically significant'' as defined under Executive Order 12866, and (2) concerns an environmental health or safety risk that EPA has reason to believe may have a disproportionate effect on children. If the regulatory action meets both criteria, the Agency must evaluate the environmental health or safety effects of the planned rule on children, and explain why the planned regulation is preferable to other potentially effective and reasonably feasible alternatives considered by the Agency.

This final rule is not subject to Executive Order 13045 because it is not economically significant within the meaning of Executive Order 12866 and does not require the consideration of relative environmental health or safety risks.

G. Executive Order 13175

Executive Order 13175: ''Consultation and Coordination with Indian Tribal Governments'' (65 FR 67249, November 6, 2000) requires EPA to develop an accountable process to ensure ''meaningful and timely input by tribal officials in the development of regulatory policies that have tribal implications.'' ''Policies that have tribal implications'' is defined in the Executive Order to include regulations that have ''substantial direct effects on one or more Indian tribes, on the relationship between the Federal government and the Indian tribes, or on the distribution of power and responsibilities between the Federal government and Indian tribes.''

The Clean Air Act requires transportation conformity to apply in areas designated nonattainment and maintenance by EPA. Today's minor amendments to the conformity rule do not significantly or uniquely affect the communities of Indian tribal governments. Specifically, this rulemaking will not have substantial direct effects on tribal governments, on the relationship between the Federal government and Indian tribes, or on the distribution of power and responsibilities between the Federal government and Indian tribes, as specified in Executive Order 13175. Accordingly, the requirements of Executive Order 13175 do not apply to this rulemaking.

H. Executive Orders on Federalism

Executive Order 13132, Federalism (64 FR 43255, August 10, 1999), revokes and replaces Executive Orders 12612 (Federalism) and 12875 (Enhancing the Intergovernmental Partnership). Executive Order 13132 requires EPA to develop an accountable process to ensure ''meaningful and timely input by State and local officials in the development of regulatory policies that have federalism implications.'' ''Policies that have federalism implications'' is defined in the Executive Order to include regulations that have ''substantial direct effects on the States, on the relationship between the national government and the States, or on the distribution of power and responsibilities among the various levels of government.'' Under Executive Order 13132, EPA may not issue a regulation that has federalism implications, that imposes substantial direct compliance costs, and that is not required by statute, unless the Federal government provides the funds necessary to pay the direct compliance costs incurred by State and local governments, or EPA consults with State and local officials early in the process of developing the regulation. EPA also may not issue a regulation that has federalism implications and that preempts State law unless the Agency consults with State and local officials early in the process of developing the proposed regulation.

If EPA complies by consulting, Executive Order 13132 requires EPA to provide to the Office of Management and Budget (OMB), in a separately identified section of the preamble to the rule, a federalism summary impact statement (FSIS). The FSIS must include a description of the extent of EPA's prior consultation with State and local officials, a summary of the nature of their concerns and the Agency's position supporting the need to issue the regulation, and a statement of the extent to which the concerns of State and local officials have been met. Also, when EPA transmits a draft rule with federalism implications to OMB for review pursuant to Executive Order 12866, EPA must include a certification from the Agency's Federalism Official stating that EPA has met the requirements of Executive Order 13132 in a meaningful and timely manner.

This final rule, that amends a regulation that is required by statute, will not have substantial direct effects on the States, on the relationship between the national government and the States, or on the distribution of power and responsibilities among the various levels of government, as specified in Executive Order 13132. The Clean Air Act requires conformity to apply in nonattainment and maintenance areas, and the U.S. Court of Appeals for the District of Columbia Circuit directed EPA to affirmatively find the motor vehicle emissions budgets contained in a SIP adequate before the budgets can be used in conformity determinations. To effectively implement the court's directive on this matter, we believe it is necessary to modify the timing of when one of our existing frequency requirements for conformity is required. The rule will also provide newly designated nonattainment areas with a one-year grace period before conformity becomes applicable, as required by an October 2000 amendment to the Clean Air Act.

In summary, one of the provisions in this final rule is required by statute and one provision will provide a reasonable response to an indirect impact of the court's decision, and by themselves will not have substantial impact on States. Thus, the requirements of section 6 of the Executive Order do not apply to this rulemaking.

I. Executive Order 13211

This rule is not subject to Executive Order 13211, ''Action Concerning Regulations That Significantly Affect Energy Supply, Distribution, or Use'' (66

FR 28355; May 22, 2001) because it is not a significant regulatory action under Executive Order 12866.

J. Submission to Congress and the Comptroller General

Under 5 U.S.C. 801(a)(1)(A), as added by the Small Business Regulatory Enforcement Fairness Act of 1996, EPA submitted a report containing this rule and other required information to the U.S. Senate, the U.S. House of Representatives, and the Comptroller General of the United States prior to the publication of the rule in today's **Federal Register**. This rule is not a ''major rule'' as defined by 5 U.S.C 804(2).

K. Petitions for Judicial Review

Under section 307(b)(1) of the Clean Air Act, petitions for judicial review of this action must be filed in the United States Court of Appeals for the appropriate circuit by October 7, 2002. Filing a petition for reconsideration by the Administrator of this final rule does not affect the finality of this rule for the purposes of judicial review, nor does it extend the time within which a petition for judicial review may be filed, and shall not postpone the effectiveness of such a rule or action. This action may not be challenged later in proceeding to enforce its requirements. (See section 307(b)(2) of the Administrative Procedures Act.)

List of Subjects in 40 CFR Part 93

Environmental protection, Administrative practice and procedure, Air pollution control, Carbon monoxide, Intergovernmental relations, Nitrogen dioxide, Ozone, Particulate matter, Transportation, Volatile organic compounds.

Dated: July 31, 2002.

Christine Todd Whitman,

Administrator.

For the reasons set out in the preamble, 40 CFR part 93 is amended as follows:

PART 93—[AMENDED]

1. The authority citation for part 93 continues to read as follows:

Authority: 42 U.S.C. 7401–7671q.

2. Section 93.102 is amended by adding paragraph (d) to read as follows:

§ 93.102 Applicability.

* * * * *

(d) *Grace period for new nonattainment areas.* For areas or portions of areas which have been continuously designated attainment or not designated for any standard for ozone, CO, PM_{10} or NO_2 since 1990 and are subsequently redesignated to nonattainment or designated nonattainment for any standard for any of these pollutants, the provisions of this subpart shall not apply with respect to that standard for 12 months following the effective date of final designation to nonattainment for each standard for such pollutant.

3. Section 93.104 is amended by revising paragraph (e)(2) to read as follows:

§ 93.104 Frequency of conformity determinations.

* * * * *

(e) * * *

(2) The effective date of EPA's finding that motor vehicle emissions budgets from an initially submitted control strategy implementation plan or maintenance plan are adequate pursuant to § 93.118(e) and can be used for transportation conformity purposes;

* * * * *

[FR Doc. 02–19797 Filed 8–5–02; 8:45 am]

BILLING CODE 6560–50–P

FEDERAL EMERGENCY MANAGEMENT AGENCY

44 CFR Part 64

[Docket No. FEMA–7789]

Suspension of Community Eligibility

AGENCY: Federal Emergency Management Agency, FEMA.

ACTION: Final rule.

SUMMARY: This rule identifies communities, where the sale of flood insurance has been authorized under the National Flood Insurance Program (NFIP), that are suspended on the effective dates listed within this rule because of noncompliance with the floodplain management requirements of the program. If the Federal Emergency Management Agency (FEMA) receives documentation that the community has adopted the required floodplain management measures prior to the effective suspension date given in this rule, the suspension will be withdrawn by publication in the **Federal Register**.

EFFECTIVE DATES: The effective date of each community's suspension is the third date (''Susp.'') listed in the third column of the following tables.

ADDRESSES: If you wish to determine whether a particular community was suspended on the suspension date, contact the appropriate FEMA Regional Office or the NFIP servicing contractor.

FOR FURTHER INFORMATION CONTACT: Edward Pasterick, Division Director, Program Marketing and Partnership Division, Federal Insurance Administration and Mitigation Directorate, 500 C Street, SW., Room 411, Washington, DC 20472, (202) 646–3098.

SUPPLEMENTARY INFORMATION: The NFIP enables property owners to purchase flood insurance which is generally not otherwise available. In return, communities agree to adopt and administer local floodplain management aimed at protecting lives and new construction from future flooding. Section 1315 of the National Flood Insurance Act of 1968, as amended, 42 U.S.C. 4022, prohibits flood insurance coverage as authorized under the National Flood Insurance Program, 42 U.S.C. 4001 *et seq.*; unless an appropriate public body adopts adequate floodplain management measures with effective enforcement measures. The communities listed in this document no longer meet that statutory requirement for compliance with program regulations, 44 CFR part 59 *et seq.* Accordingly, the communities will be suspended on the effective date in the third column. As of that date, flood insurance will no longer be available in the community. However, some of these communities may adopt and submit the required documentation of legally enforceable floodplain management measures after this rule is published but prior to the actual suspension date. These communities will not be suspended and will continue their eligibility for the sale of insurance. A notice withdrawing the suspension of the communities will be published in the **Federal Register**.

In addition, the Federal Emergency Management Agency has identified the special flood hazard areas in these communities by publishing a Flood Insurance Rate Map (FIRM). The date of the FIRM if one has been published, is indicated in the fourth column of the table. No direct Federal financial assistance (except assistance pursuant to the Robert T. Stafford Disaster Relief and Emergency Assistance Act not in connection with a flood) may legally be provided for construction or acquisition of buildings in the identified special flood hazard area of communities not participating in the NFIP and identified for more than a year, on the Federal Emergency Management Agency's initial flood insurance map of the community as having flood-prone areas (section 202(a) of the Flood Disaster Protection Act of 1973, 42 U.S.C. 4106(a), as amended). This prohibition against certain types of Federal assistance becomes effective for the

communities listed on the date shown in the last column. The Associate Director finds that notice and public comment under 5 U.S.C. 553(b) are impracticable and unnecessary because communities listed in this final rule have been adequately notified.

Each community receives a 6-month, 90-day, and 30-day notification addressed to the Chief Executive Officer that the community will be suspended unless the required floodplain management measures are met prior to the effective suspension date. Since these notifications have been made, this final rule may take effect within less than 30 days.

National Environmental Policy Act. This rule is categorically excluded from the requirements of 44 CFR Part 10, Environmental Considerations. No environmental impact assessment has been prepared.

Regulatory Flexibility Act. The Associate Director has determined that this rule is exempt from the requirements of the Regulatory Flexibility Act because the National Flood Insurance Act of 1968, as amended, 42 U.S.C. 4022, prohibits flood insurance coverage unless an appropriate public body adopts adequate floodplain management measures with effective enforcement measures. The communities listed no longer comply with the statutory requirements, and after the effective date, flood insurance will no longer be available in the communities unless they take remedial action.

Regulatory Classification. This final rule is not a significant regulatory action under the criteria of section 3(f) of Executive Order 12866 of September 30, 1993, Regulatory Planning and Review, 58 FR 51735.

Paperwork Reduction Act. This rule does not involve any collection of information for purposes of the Paperwork Reduction Act, 44 U.S.C. 3501 *et seq.*

Executive Order 12612, Federalism. This rule involves no policies that have federalism implications under Executive Order 12612, Federalism, October 26, 1987, 3 CFR, 1987 Comp.; p. 252.

Executive Order 12778, Civil Justice Reform. This rule meets the applicable standards of section 2(b)(2) of Executive Order 12778, October 25, 1991, 56 FR 55195, 3 CFR, 1991 Comp.; p. 309.

List of Subjects in 44 CFR Part 64

Flood insurance, Floodplains.

Accordingly, 44 CFR part 64 is amended as follows:

PART 64—[AMENDED]

1. The authority citation for Part 64 continues to read as follows:

Authority: 42 U.S.C. 4001 *et seq.*; Reorganization Plan No. 3 of 1978, 3 CFR, 1978 Comp.; p. 329; E.O. 12127, 44 FR 19367, 3 CFR, 1979 Comp.; p. 376.

§ 64.6 [Amended]

2. The tables published under the authority of § 64.6 are amended as follows:

State and location	Community No.	Effective date authorization/cancellation of sale of flood insurance in community	Current effective map date	Date certain Federal assistance no longer available in special flood hazard areas
Region II				
New Jersey: Deal, Borough of, Monmouth County.	340292	January 14, 1972, Emerg.; March 5, 1976, Reg.; August 6, 2002.	8/6/02	8/6/02.
New York:				
Angola, Village of, Erie County	360982	April 14, 1975, Emerg.; May 18, 1979, Reg.; August 6, 2002.	do	Do.
East Aurora, Village of, Erie County	365335	December 23, 1971, Emerg.; July 20, 1973, Reg.; August 6, 2002.	do	Do.
Region VII				
Leigh, Village of, Colfax County	310386	August 25, 1975, Emerg.; July 1, 1987, Reg.; August 6, 2002.	do	Do.
Schuyler, City of, Colfax County	310046	August 30, 1974, Emerg.; March 5, 1990, Reg.; August 6, 2002.	do	Do.
Region I				
Massachusetts:				
Revere, City of, Suffolk County	250288	December 29, 1972, Emerg.; October 16, 1984, Reg.; August 20, 2002.	8/20/02	8/20/02.
Malden, City of, Middlesex County	250202	July 25, 1975, Emerg.; May 19, 1987, Reg.; August 20, 2002.	do	Do.
Region II				
New Jersey: Watchung, Borough of, Somerset County.	340447	September 17, 1973, Emerg.; December 4, 1979, Reg.; August 20, 2002.	do	Do.
Region VII				
Iowa:				
Hills, City of, Johnson County	190170	August 11, 1975, Emerg.; August 16, 1988, Reg.; August 20, 2002.	do	Do.
North Liberty, City of, Johnson County	190630	May 24, 1977, Emerg.; November 5, 1986, Reg.; August 20, 2002.	do	Do.
Oxford, City of, Johnson County	190172	June 26, 1990.; September 18, 1991, Reg.; August 20, 2002.	do	Do.
Shueyville, City of, Johnson County	195184	March 6, 1991, Emerg.; September 1, 1991, Reg.; August 20, 2002.	do	Do.
Region X				
Oregon:				
Tillamook County, Unincorporated Areas.	410196	December 29, 1972, Emerg.; August 1, 1978, Reg.; August 20, 2002.	do	Do.

State and location	Community No.	Effective date authorization/cancellation of sale of flood insurance in community	Current effective map date	Date certain Federal assistance no longer available in special flood hazard areas
Tillamook, City of, Tillamook County	410202	March 30, 1973, Emerg.; May 1, 1978, Reg.; August 20, 2002.	.....do	Do.

Code for reading third column: Emerg.—Emergency; Reg.—Regular; Susp.—Suspension.

Dated: July 26, 2002.

Robert F. Shea,

Acting Administrator, Federal Insurance Administration and Mitigation Administration.

[FR Doc. 02–19752 Filed 8–5–02; 8:45 am]

BILLING CODE 6718–05–P

FEDERAL COMMUNICATIONS COMMISSION

47 CFR Part 73

[DA 02–1652; MM Docket No. 02–24 RM–10360]

Radio Broadcasting Services; Harrodsburg and Keene, Kentucky

AGENCY: Federal Communications Commission.

ACTION: Final rule.

SUMMARY: In this document, the Commission substitutes Channel 256A for Channel 257C3 at Harrodsburg and reallots Channel 256A from Harrodsburg to Keene, Kentucky, as the community's first local aural transmission service, and modifies the license for Station WJMM–FM to reflect the changes. *See* 67 FR 8219 (02/22/2002). On June 2, 1997, the Audio Services Division granted a minor change application (BPH–970129IB) for WJMM–FM (formerly WHBN–FM), upgrading its facilities to specify operation on Channel 257C3 in lieu of Channel 257A. Channel 256A is allotted at Keene, Kentucky, without a site restriction. Coordinates for Channel 256A at Keene are: NL 37–56–36 and WL 84–38–31.

DATES: Effective September 3, 2002.

FOR FURTHER INFORMATION CONTACT: Victoria M. McCauley, Media Bureau, (202) 418–2180.

SUPPLEMENTARY INFORMATION: This is a synopsis of the Commission's Report and Order, MM Docket No. 02–24, adopted July 3, 2002, and released July 19, 2002. The full text of this Commission decision is available for inspection and copying during normal business hours in the FCC Reference Center (Room 239), 445 12th Street, SW., Washington, DC. This document may also be purchased from the Commission's duplicating contractor, Qualex International, Portals II, 445 12th Street, SW., Room CY–B402, Washington, DC, 20554, telephone 202–863–2893, facsimile 202–863–2898, or via e-mail *qualexint@aol.com*.

List of Subjects in 47 CFR Part 73

Radio, Radio broadcasting.

Accordingly, part 73 of Title 47 of the Code of Federal Regulations is amended as follows:

PART 73—RADIO BROADCAST SERVICES

1. The authority citation for part 73 continues to read as follows:

Authority: 47 U.S.C. 154, 303, 334, and 336.

2. Section 73.202(b), the Table of FM Allotments under Kentucky, is amended by adding Keene, Channel 256A, and removing Harrodsburg, Channel 257A.

Federal Communications Commission.

John A. Karousos,

Assistant Chief, Audio Division, Media Bureau.

[FR Doc. 02–19733 Filed 8–5–02; 8:45 am]

BILLING CODE 6712–01–P

FEDERAL COMMUNICATIONS COMMISSION

47 CFR Part 73

[DA 02–1726; MM Docket No. 01–197; RM–10170]

Radio Broadcasting Services; Baird, TX

AGENCY: Federal Communications Commission.

ACTION: Final rule.

SUMMARY: This document allots Channel 243C3 to Baird, Texas, in response to a petition filed by Katherine Pyeatt. See 66 FR 46426, September 5, 2001. The coordinates for Channel 243C3 at Baird are 32–35–06 and 99–21–56. There is a site restriction 21.4 (13.3 miles) north of the community. With this action, this proceeding is terminated. A filing window for Channel 243C3 at Baird will not be opened at this time. Instead, the issue of opening this allotment for auction will be addressed by the Commission in a subsequent order.

DATES: Effective September 3, 2002

FOR FURTHER INFORMATION CONTACT: Kathleen Scheuerle, Media Bureau, (202) 418–2180

SUPPLEMENTARY INFORMATION: This is a summary of the Commission's Report and Order, MM Docket No. 01–197, adopted July 10, 2002, and released July 19, 2002. The full text of this Commission decision is available for public inspection and copying during regular business hours in the FCC Reference Information Center, Portals II, 445 12th Street, SW., Room CY–A257, Washington, DC, 20554. The complete text of this decision may also be purchased from the Commission's duplicating contractor, Qualex International, Portals II, 445 12th Street, SW., Room CY–B402, Washington, DC, 20554, telephone 202–863–2893, facsimile 202–863–2898, or via e-mail *qualexint@aol.com.*

List of Subjects in 47 CFR Part 73

Radio, Radio broadcasting.

Accordingly, Part 73 of title 47 of the Code of Federal Regulations is amended as follows:

PART 73—RADIO BROADCAST SERVICES

1. The authority citation for Part 73 continues to read as follows:

Authority: 47 U.S.C. 154, 303, 334 and 336.

§ 73.202 [Amended]

2. Section 73.202(b), the Table of FM Allotments under Texas, is amended by adding Channel 243C3 at Baird.

Federal Communications Commission.

John A. Karousos,

Assistant Chief, Audio Division, Media Bureau.

[FR Doc. 02–19735 Filed 8–5–02; 8:45 am]

BILLING CODE 6712–01–P

FEDERAL COMMUNICATIONS COMMISSION

47 CFR Part 73

[DA 02–1629; MM Docket No. 01–247; RM–10232]

Radio Broadcasting Services; Big Wells, TX

AGENCY: Federal Communications Commission.

ACTION: Final rule.

SUMMARY: This document allots Channel 271A to Big Wells, Texas, in response to a petition filed by Katherine Pyeatt. *See* 66 FR 51361, October 9, 2001. The coordinates for Channel 271A at Big Wells are 28–34–05 and 99–32–52. There is a site restriction 2.1 kilometers (1.3 miles) east of the community. With this action, this proceeding is terminated. A filing window for Channel 271A at Big Wells will not be opened at this time. Instead, the issue of opening this allotment for auction will be addressed by the Commission in a subsequent order.

DATES: Effective September 3, 2002.

FOR FURTHER INFORMATION CONTACT: Kathleen Scheuerle, Media Bureau, (202) 418–2180

SUPPLEMENTARY INFORMATION: This is a summary of the Commission's Report and Order, MM Docket No. 01–247, adopted July 3, 2002, and released July 19, 2002. The full text of this Commission decision is available for inspection and copying during regular business hours in the FCC Information Center, Portals II, 445 12th Street, SW., Room CY–A257, Washington, DC 20554. The complete text of this decision may also be purchased from the Commission's duplicating contractor, Qualex International, Portals II, 445 12th Street, SW., Room CY–B402, Washington, DC, 20554, (202) 863–2893, facsimile (202) 863–2898, or via e-mail *qualexint@aol.com.*

List of Subjects in 47 CFR Part 73

Radio, Radio broadcasting.

Accordingly, Part 73 of title 47 of the Code of Federal Regulations is amended as follows:

PART 73—RADIO BROADCAST SERVICES

1. The authority citation for Part 73 continues to read as follows:

Authority: 47 U.S.C. 154, 303, 334 and 336.

§ 73.202 [Amended]

2. Section 73.202(b), the Table of FM Allotments under Texas, is amended by adding Big Wells, Channel 271A.

Federal Communications Commission.

John A. Karousos,

Assistant Chief, Audio Division, Media Bureau.

[FR Doc. 02–19736 Filed 8–5–02; 8:45 am]

BILLING CODE 6712–01–P

FEDERAL COMMUNICATIONS COMMISSION

47 CFR Part 73

[DA 02–1727; MM Docket No. 01–262; RM–10231]

Radio Broadcasting Services; La Pryor, TX

AGENCY: Federal Communications Commission.

ACTION: Final rule.

SUMMARY: This document allots Channel 278A to La Pryor, Texas, in response to a petition filed by Katherine Pyeatt. *See* 66 FR 52565, October 16, 2001. The coordinates for Channel 278A at La Pryor are 28–58–09 and 99–56–05. There is a site restriction 8.9 kilometers (5.6 miles) west of the community. With this action, this proceeding is terminated. A filing window for Channel 278A at La Pryor will not be opened at this time. Instead, the issue of opening this allotment for auction will be addressed by the Commission in a subsequent order.

DATES: Effective September 3, 2002.

FOR FURTHER INFORMATION CONTACT: Kathleen Scheuerle, Media Bureau, (202) 418–2180

SUPPLEMENTARY INFORMATION: This is a summary of the Commission's Report and Order, MM Docket No. 01–262, adopted July 10, 2002, and released July 19, 2002. The full text of this Commission decision is available for inspection and copying during regular business hours in the FCC Information Center, Portals II, 445 12th Street, SW., Room CY–A257, Washington, DC 20554. The complete text of this decision may also be purchased from the Commission's duplicating contractor, Qualex International, Portals II, 445 12th Street, SW., Room CY–B402, Washington, DC, 20554, (202) 863–2893, facsimile (202) 863–2898, or via e-mail *qualexint@aol.com.*

List of Subjects in 47 CFR Part 73

Radio, Radio broadcasting.

Accordingly, Part 73 of title 47 of the Code of Federal Regulations is amended as follows:

PART 73—RADIO BROADCAST SERVICES

1. The authority citation for Part 73 continues to read as follows:

Authority: 47 U.S.C. 154, 303, 334 and 336.

§ 73.202 [Amended]

2. Section 73.202(b), the Table of FM Allotments under Texas, is amended by adding La Pryor, Channel 278A.

Federal Communications Commission.

John A. Karousos,

Assistant Chief, Audio Division, Media Bureau.

[FR Doc. 02–19737 Filed 8–5–02; 8:45 am]

BILLING CODE 6712–01–P

FEDERAL COMMUNICATIONS COMMISSION

47 CFR Part 73

[DA 02–1624; MM Docket No. 02–48; RM–10386]

Radio Broadcasting Services; Cuthbert and Buena Vista, GA

AGENCY: Federal Communications Commission.

ACTION: Final rule.

SUMMARY: In response to a *Notice of Proposed Rule Making,* 67 FR 16351 (April 5, 2002), this document reallots Channel 264C3 from Cuthbert, Georgia, to Buena Vista, Georgia, and provides Buena Vista with its first local aural transmission service. The coordinates for Channel 264C3 at Buena Vista are 32–11–57 North Latitude and 84–35–07 West Longitude.

DATES: Effective September 3, 2002.

FOR FURTHER INFORMATION CONTACT: R. Barthen Gorman, Media Bureau, (202) 418–2180.

SUPPLEMENTARY INFORMATION: This is a synopsis of the Commission's Report and Order, MM Docket No. 02–48, adopted July 3, 2002, and released July 19, 2002. The full text of this Commission decision is available for inspection and copying during normal business hours in the FCC's Reference Information Center at Portals II, CY–A257, 445 12th Street, SW., Washington, DC. This document may also be purchased from the Commission's duplicating contractors, Qualex International, Portals II, 445 12th Street, SW., Room CY–B402, Washington, DC, 20554, telephone 202–863–2893, facsimile 202–863–2898, or via e-mail *qualexint@aol.com.*

List of Subjects in 47 CFR Part 73

Radio, Radio broadcasting.

Accordingly, Part 73 of Title 47 of the Code of Federal Regulations is amended as follows:

PART 73—RADIO BROADCAST SERVICES

1. The authority citation for Part 73 reads as follows:

Authority: 47 U.S.C. 154, 303, 334 and 336.

§ 73.202 [Amended]

2. Section 73.202(b), the Table of FM Allotments under Georgia, is amended by adding Buena Vista, Channel 264C3, and removing Cuthbert, Channel 264C3.

Federal Communications Commission.

John A. Karousos,

Assistant Chief, Audio Division, Media Bureau.

[FR Doc. 02–19745 Filed 8–5–02; 8:45 am]

BILLING CODE 6712–01–U

FEDERAL COMMUNICATIONS COMMISSION

47 CFR Part 73

[DA 02–1728; MM Docket No. 01–246; RM–10230]

Radio Broadcasting Services; Asherton, TX

AGENCY: Federal Communications Commission.

ACTION: Final rule.

SUMMARY: This document allots Channel 284A to Asherton, Texas, in response to a petition filed by Jeraldine Anderson. *See* 66 FR 51360, October 9, 2001. The coordinates for Channel 284A at Asherton are 28–22–58 and 99–45–00. There is a site restriction 6.8 kilometers (4.2 miles) south of the community. With this action, this proceeding is terminated. A filing window for Channel 284A at Asherton will not be opened at this time. Instead, the issue of opening this allotment for auction will be addressed by the Commission in a subsequent order.

DATES: Effective September 3, 2002.

FOR FURTHER INFORMATION CONTACT: Kathleen Scheuerle, Media Bureau, (202) 418–2180.

SUPPLEMENTARY INFORMATION: This is a summary of the Commission's Report and Order, MM Docket No. 01–246, adopted July 10, 2002, and released July 19, 2002. The full text of this Commission decision is available for inspection and copying during regular business hours in the FCC Information Center, Portals II, 445 12th Street, SW., Room CY–A257, Washington, DC 20554. The complete text of this decision may also be purchased from the Commission's duplicating contractor, Qualex International, Portals II, 445 12th Street, SW., Room CY–B402, Washington, DC, 20554, (202) 863–2893, facsimile (202) 863–2898, or via e-mail *qualexint@aol.com.*

List of Subjects in 47 CFR Part 73

Radio, Radio broadcasting.

Accordingly, Part 73 of title 47 of the Code of Federal Regulations is amended as follows:

PART 73—RADIO BROADCAST SERVICES

1. The authority citation for Part 73 continues to read as follows:

Authority: 47 U.S.C. 154, 303, 334 and 336.

§ 73.202 [Amended]

2. Section 73.202(b), the Table of FM Allotments under Texas, is amended by adding Asherton, Channel 284A.

Federal Communications Commission.

John A. Karousos,

Assistant Chief, Audio Division, Media Bureau.

[FR Doc. 02–19738 Filed 8–5–02; 8:45 am]

BILLING CODE 6712–01–P

FEDERAL COMMUNICATIONS COMMISSION

47 CFR Part 73

[DA 02–1627; MM Docket No. 01–234; RM–10262]

Radio Broadcasting Services; Firth, NE

AGENCY: Federal Communications Commission.

ACTION: Final rule.

SUMMARY: The Commission, at the request of Starboard Broadcasting, Inc., allots Channel 229A at Firth, Nebraska, as the community's first local FM service. Channel 229A can be allotted to Firth, Nebraska, in compliance with the Commission's minimum distance separation requirements with a site restriction of 10.8 km (6.7 miles) northwest of Firth. The coordinates for Channel 2295A at Firth, NE, CA are 40–36–32 North Latitude and 96–41–08 West Longitude. A filing window for Channel 229A at Firth, NE, will not be opened at this time. Instead, the issue of opening this allotment for auction will be addressed by the Commission in a subsequent Order.

DATES: Effective September 3, 2002.

FOR FURTHER INFORMATION CONTACT: Deborah Dupont, Media Bureau, (202) 418–2180.

SUPPLEMENTARY INFORMATION: This is a synopsis of the Commission's Report and Order, MM Docket No. 01–234, adopted July 3, 2002, and released July 19, 2002. The full text of this Commission decision is available for inspection and copying during normal business hours in the FCC Information Center, Portals II, 445 12th Street, SW., Room CY–A257, Washington, DC 20554. The complete text of this decision may also be purchased from the Commission's duplicating contractor, Qualex International, Portals II, 445 12th Street, SW., Room CY–B402, Washington, DC, 20554, (202) 863–2893, facsimile (202) 863–2898, or via e-mail *qualexint@aol.com.*

List of Subjects in 47 CFR part 73

Radio, Radio broadcasting.

Accordingly, Part 73 of title 47 of the Code of Federal Regulations is amended as follows:

PART 73—RADIO BROADCAST SERVICES

1. The authority citation for Part 73 continues to read as follows:

Authority: 47 U.S.C. 154, 303, 334 and 336.

§ 73.202 [Amended]

2. Section 73.202(b), the Table of FM Allotments under Nebraska, is amended by adding Firth, Channel 229A.

Federal Communications Commission.

John A. Karousos,

Assistant Chief, Audio Division, Media Bureau.

[FR Doc. 02–19739 Filed 8–5–02; 8:45 am]

BILLING CODE 6712–01–P

FEDERAL COMMUNICATIONS COMMISSION

47 CFR Part 73

[DA 02–1622; MM Docket No. 01–221; RM–10171]

Radio Broadcasting Services; Buffalo Gap, TX

AGENCY: Federal Communications Commission.

ACTION: Final rule.

SUMMARY: This document allots Channel 227A to Buffalo Gap, Texas, in response to a petition filed by Katherine Pyeatt. See 66 FR 47432, September 12, 2001. The coordinates for Channel 227A at Buffalo Gap are 32–16–55 and 99–53–54. There is a site restriction 6.5 kilometers (4.0 miles) west of the community. With this action, this proceeding is terminated. A filing window for Channel 227A at Buffalo

Gap will not be opened at this time. Instead, the issue of opening this allotment for auction will be addressed by the Commission in a subsequent order.

DATES: Effective September 3, 2002.

FOR FURTHER INFORMATION CONTACT: Kathleen Scheuerle, Media Bureau, (202) 418–2180.

SUPPLEMENTARY INFORMATION: This is a summary of the Commission's Report and Order, MM Docket No. 01–221, adopted July 3, 2002, and released July 19, 2002. The full text of this Commission decision is available for inspection and copying during regular business hours in the FCC Information Center, Portals II, 445 12th Street, SW., Room CY–A257, Washington, DC 20554. The complete text of this decision may also be purchased from the Commission's duplicating contractor, Qualex International, Portals II, 445 12th Street, SW., Room CY–B402, Washington, DC, 20554, (202) 863–2893, facsimile (202) 863–2898, or via e-mail *qualexint@aol.com.*

List of Subjects in 47 CFR Part 73

Radio, Radio broadcasting.

Accordingly, Part 73 of title 47 of the Code of Federal Regulations is amended as follows:

PART 73—RADIO BROADCAST SERVICES

1. The authority citation for Part 73 continues to read as follows:

Authority: 47 U.S.C. 154, 303, 334 and 336.

§ 73.202 [Amended]

2. Section 73.202(b), the Table of FM Allotments under Texas, is amended by adding Buffalo Gap, Channel 227A.

Federal Communications Commission.

John A. Karousos,

Assistant Chief, Audio Division, Media Bureau.

[FR Doc. 02–19743 Filed 8–5–02; 8:45 am]

BILLING CODE 6712–01–P

FEDERAL COMMUNICATIONS COMMISSION

47 CFR Part 73

[DA 02–1626; MM Docket No. 01–311; RM–10318]

Radio Broadcasting Services; Burney, CA

AGENCY: Federal Communications Commission.

ACTION: Final rule.

SUMMARY: The Commission, at the request of Corey J. McCaslin, allots Channel 225A to Burney, California, as the community's second local FM service. Channel 225A can be allotted to Burney, California, in compliance with the Commission's minimum distance separation requirements at center city coordinates without a site restriction. The coordinates for Channel 225A at Burney, CA are 40–52–56 North Latitude and 121–39–34 West Longitude. A filing window for Channel 225A at Burney, CA, will not be opened at this time. Instead, the issue of opening this allotment for auction will be addressed by the Commission in a subsequent Order.

DATES: Effective September 3, 2002.

FOR FURTHER INFORMATION CONTACT: Deborah Dupont, Media Bureau, (202) 418–2180.

SUPPLEMENTARY INFORMATION: This is a synopsis of the Commission's Report and Order, MM Docket No. 01–311, adopted July 3, 2002, and released July 19, 2002. The full text of this Commission decision is available for inspection and copying during normal business hours in the FCC Information Center, Portals II, 445 12th Street, SW., Room CY–A257, Washington, DC 20554. The complete text of this decision may also be purchased from the Commission's duplicating contractor, Qualex International, Portals II, 445 12th Street, SW., Room CY–B402, Washington, DC, 20554, (202) 863–2893, facsimile (202) 863–2898, or via e-mail *qualexint@aol.com.*

List of Subjects in 47 CFR part 73

Radio, Radio broadcasting.

Accordingly, Part 73 of title 47 of the Code of Federal Regulations is amended as follows:

PART 73—RADIO BROADCAST SERVICES

1. The authority citation for Part 73 continues to read as follows:

Authority: 47 U.S.C. 154, 303, 334 and 336.

§ 73.202 [Amended]

2. Section 73.202(b), the Table of FM Allotments under California, is amended by adding Channel 225A at Burney.

Federal Communications Commission.

John A. Karousos,

Assistant Chief, Audio Division, Media Bureau.

[FR Doc. 02–19740 Filed 8–5–02; 8:45 am]

BILLING CODE 6712–01–P

FEDERAL COMMUNICATIONS COMMISSION

47 CFR Part 73

[DA 02–1623; MM Docket No.01–196; RM–10208]

Radio Broadcasting Services; Childress, TX

AGENCY: Federal Communications Commission.

ACTION: Final rule.

SUMMARY: This document allots Channel 281C2 to Childress, Texas, in response to a petition filed by Jeraldine Anderson. *See* 66 FR 46425, September 5, 2001. The coordinates for Channel 281C2 at Childress are 34–12–44 and 100–15–55. There is a site restriction 23.6 kilometers (14.6 miles) south of the community. With this action, this proceeding is terminated. A filing window for Channel 281C2 at Childress will not be opened at this time. Instead, the issue of opening this allotment for auction will be addressed by the Commission in a subsequent order.

DATES: Effective September 3, 2002

FOR FURTHER INFORMATION CONTACT: Kathleen Scheuerle, Media Bureau, (202) 418–2180.

SUPPLEMENTARY INFORMATION: This is a summary of the Commission's Report and Order, MM Docket No. 01–196, adopted July 3, 2002, and released July 19, 2002. The full text of this Commission decision is available for inspection and copying during regular business hours in the Commission's Reference Information Center, Portals II, 445 12th Street, SW., Room CY–A257, Washington, DC 20554. The complete text of this decision may also be purchased from the Commission's duplicating contractor, Qualex International, Portals II, 445 12th Street, SW., Room CY–B402, Washington, DC, 20554, (202) 863–2893, facsimile (202) 863–2898, or via e-mail *qualexint@aol.com.*

List of Subjects in 47 CFR Part 73

Radio, Radio broadcasting.

Accordingly, Part 73 of title 47 of the Code of Federal Regulations is amended as follows:

PART 73—RADIO BROADCAST SERVICES

1. The authority citation for Part 73 continues to read as follows:

Authority: 47 U.S.C. 154, 303, 334 and 336.

§ 73.202 [Amended]

2. Section 73.202(b), the Table of FM Allotments under Texas, is amended by adding Channel 281C2 at Childress.

Federal Communications Commission.

John A. Karousos,

Assistant Chief, Audio Division, Media Bureau.

[FR Doc. 02–19741 Filed 8–5–02; 8:45 am]

BILLING CODE 6712–01–P

NATIONAL AERONAUTICS AND SPACE ADMINISTRATION

48 CFR Parts 1804, 1813, 1815, 1825, and 1852

RIN 2700–AC33

Conformance With FAC 01–07 and Miscellaneous Administrative and Technical Changes

AGENCY: National Aeronautics and Space Administration.

ACTION: Final rule.

SUMMARY: This final rule revises the NASA FAR Supplement (NFS) to remove language pertaining to the Balance of Payments Program as a result of Federal Acquisition Circular (FAC) 01–07, and make miscellaneous administrative and technical changes. These changes are required to conform to the FAR, clarify administrative procedures, and correct references.

EFFECTIVE DATE: August 6, 2002.

FOR FURTHER INFORMATION CONTACT: Celeste Dalton, NASA, Office of Procurement, Contract Management Division (Code HK), (202) 358–1645, e-mail: *cdalton@hq.nasa.gov.*

SUPPLEMENTARY INFORMATION:

A. Background

Item II of Federal Acquisition Circular (FAC) 01–07 removed Subpart 25.3, Balance of Payments Programs. This change makes conforming changes to NFS parts 1825 and 1852 as a result of FAC 01–07. Additionally, this final rule makes administrative changes in section 1804.670, Individual Procurement Action Report (NASA 507 series); removes redundant language in section 1804.7403, Procedures, regarding offeror registration in the Central Contractor Registration (CCR) database and contract award; and clarifies the prescription language for NFS provisions in 1813.302–570 and 1815.209–70, NASA solicitation provisions.

Finally, this final rule makes technical corrections to organizational addresses and reference citations.

B. Regulatory Flexibility Act

This final rule does not constitute a significant revision within the meaning of FAR 1.501 and Public Law 98–577, and publication for public comment is not required. However, NASA will consider comments from small entities concerning the affected NFS Parts 1804, 1813, 1815, 1825, and 1852 in accordance with 5 U.S.C. 610.

C. Paperwork Reduction Act

The Paperwork Reduction Act does not apply because the changes do not impose recordkeeping or information collection requirements which require the approval of the Office of Management and Budget under 44 U.S.C. 3501, *et seq.*

List of Subjects in 48 CFR Parts 1804, 1813, 1815, 1825, and 1852

Government procurement.

Tom Luedtke,

Assistant Administrator for Procurement.

Accordingly, 48 CFR parts 1804, 1813, 1815, 1825, and 1852 are amended as follows:

1. The authority citation for 48 CFR parts 1804, 1813, 1815, 1825, and 1852 continues to read as follows:

Authority: 42 U.S.C. 2473(c)(1).

PART 1804—ADMINISTRATIVE MATTERS

1804.601 [Amended]

2. Amend section 1804.601 by removing ''(Code HS)'' and adding ''(Code HC)'' in its place.

1804.602 [Amended]

3. Amend section 1804.602 in paragraph (d) by removing ''Code HS'' and adding ''Code HC'' in its place.

4. Revise section 1804.670 to read as follows:

1804.670 Individual Procurement Action Report (NASA Form 507 series).

The Individual Procurement Action Report and Supplements (NASA Form 507 series) provide essential procurement records and statistics through a single uniform reporting program as a basis for required recurring and special reports to Congress, Federal Procurement Data Center, and other Federal agencies. The preparation and utilization of the NASA Form 507 series are integral parts of the agencywide Financial and Contractual Status (FACS) system. The Headquarters Office of Procurement issues Procurement Information Circulars (PICs) to—

(a) Identify the procurement actions subject to reporting; and

(b) Provide instructions on preparation of the NASA Forms 507.

1804.670–1, 1804.670–2, and 1804.670–3 [Removed]

5. Remove sections 1804.670–1, 1804.670–2, and 1804.670–3.

1804.7402 [Amended]

6. Amend section 1804.7402 in the first sentence of the introductory text by removing ''after March 31, 2001''.

7. Amend section 1804.7403 by removing ''must'' in paragraphs (a)(1) and (c) and adding ''shall'' in its place; and revising paragraph (b) to read as follows:

1804.7403 Procedures.

* * * * *

(b) If the contracting officer determines that a prospective awardee is not registered in the CCR database, the contracting officer shall —

(1) If delaying the acquisition would not be to the detriment of the Government, proceed to award after the contractor is registered; or

(2) If delaying the acquisition would be to the detriment of the Government, proceed to award to the next otherwise successful registered offeror, with the written approval of the Procurement Officer.

* * * * *

PART 1813—SIMPLIFIED ACQUISITION PROCEDURES

8. Revise section 1813.302–1 to read as follows:

1813.302–1 General.

(a) *See* 1813.003(g).

9. Amend section 1813.302–570 by revising paragraphs (a)(1) and (b) to read as follows:

1813.302–570 NASA solicitation provisions.

(a)(1) The contracting officer may use the provision at 1852.213–70, Offeror Representations and Certifications—Other Than Commercial Items, in simplified acquisitions exceeding the mircro-purchase threshold that are for other than commercial items. This provision shall not be used for acquisition of commercial items as defined in FAR 2.101.

* * * * *

(b) The contracting officer may insert a provision substantially the same as the provision at 1852.213–71, Evaluation—Other than Commercial Items, in solicitations using simplified acquisition procedures for other than commercial items when a trade-off source selection process will be used,

that is, factors in addition to technical acceptability and price will be considered. (*See* FAR 13.106.)

PART 1815—CONTRACTING BY NEGOTIATIONS

10. In section 1815.209–70, revise paragraphs (b) and (c) to read as follows:

1815.209–70 NASA solicitation provisions.

* * * * *

(b) When it is not in the Government's best interest to make award for less than the specified quantities solicited for certain items or groupings of items, the contracting officer shall insert the provision at

1852.214–71, Grouping for Aggregate Award. *See* **1814.201–670(b).**

(c) When award will be made only on the full quantities solicited, the contracting officer shall insert the provision at 1852.214–72, Full Quantities. *See* 1814.201–670(c).

* * * * *

PART 1825—FOREIGN ACQUISITION

1825.400 [Amended]

11. Amend section 1825.400 by removing ''and the Balance of Payments Program apply'' and adding ''applies'' in its place.

PART 1852—SOLICITATION PROVISIONS AND CONTRACT CLAUSES

1852.213–70 [Amended]

12. Amend section 1852.213–70 by—

a. In the provision heading, removing ''(JUN 2002)'' and adding ''(JULY 2002)'' in its place;

b. Removing ''—Balance of Payments Program'' in the introductory text of paragraph (e) (twice), and from paragraph (e)(1);

c. Removing ''—Balance of Payments Program'' in paragraph (f)(1) (twice), and from paragraphs (f)(1)(i), (f)(1)(ii), (f)(1)(iii), (f)(2) (twice), and (f)(3) (twice);

d. Removing ''or the Balance of Payments Program'' in paragraph (f)(4)(iii); and

e. In the introductory text of paragraph (g), removing ''(j)(1)'' and adding ''(g)(1)'' in its place.

[FR Doc. 02–19815 Filed 8–5–02; 8:45 am]

BILLING CODE 7510–01–P

NATIONAL AERONAUTICS AND SPACE ADMINISTRATION

48 CFR Part 1819

RIN 2700–AC33

Small Business Competitiveness Demonstration Program

AGENCY: National Aeronautics and Space Administration.

ACTION: Final rule.

SUMMARY: This final rule revises the NASA FAR Supplement by removing Research and Development in the Physical Engineering and Life Sciences from the list of targeted industry categories (TICs) for NASA under the Small Business Competitiveness Demonstration Program. This change is required to prevent potential conflicts between the goals of the Small Business Competitiveness Demonstration Program and the Small Business Innovative Research Program created by the conversion from Standard Industrial Classification to the North American Industry Classification System.

EFFECTIVE DATE: August 6, 2002.

FOR FURTHER INFORMATION CONTACT: Yolande Harden, NASA, Office of Procurement, Contract Management Division (Code HK); (202) 358–1279; e-mail: *yharden@hq.nasa.gov.*

SUPPLEMENTARY INFORMATION:

A. Background

The conversion from Standard Industrial Classification (SIC) to North American Industry Classification System (NAICS) combined several stand-alone classification categories together. As a result, NAICS 54171 now contains not only categories previously listed as TICs but also other categories, some of which are used in conjunction with the Small Business Innovative Research (SBIR) Program. The deletion of this category will avoid any potential conflicts between the goals of the Competitiveness Demonstration Program and the SBIR Program.

B. Regulatory Flexibility Act

This final rule does not constitute a significant revision within the meaning of FAR 1.501 and Public Law 98–577, and publication for public comment is not required. However, NASA will consider comments from small entities concerning the affected NFS part 1819 in accordance with 5 U.S.C. 610.

C. Paperwork Reduction Act

The Paperwork Reduction Act does not apply because the changes do not impose recordkeeping or information collection requirements which require the approval of the Office of Management and Budget under 44 U.S.C. 3501, *et seq.*

List of Subjects in 48 CFR Part 1819

Government Procurement.

Tom Luedtke,

Assistant Administrator for Procurement.

Accordingly, 48 CFR Part 1819 is amended as follows:

1. The authority citation for 48 CFR Part 1819 continues to read as follows:

Authority: 42 U.S.C. 2473(c)(1).

PART 1819—SMALL BUSINESS PROGRAMS

1819.1005 [Amended]

2. Amend the table in paragraph (b) of section 1819.1005 as follows:

a. In the first column by removing ''54171''; and

b. In the second column by removing ''Research and Development in the Physical Engineering and Life Sciences''.

[FR Doc. 02–19814 Filed 8–5–02; 8:45 am]

BILLING CODE 7510–01–P

DEPARTMENT OF TRANSPORTATION

Research and Special Programs Administration

49 CFR Part 192

[Docket No. RSPA–00–7666; Amendment 192–77]

RIN 2137–AD64

Pipeline Safety: High Consequence Areas For Gas Transmission Pipelines

AGENCY: Office of Pipeline Safety (OPS), Research and Special Programs Administration (RSPA), Department of Transportation (DOT).

ACTION: Final rule.

SUMMARY: This final rule defines areas of high consequence where the potential consequences of a gas pipeline accident may be significant or may do considerable harm to people and their property. The definition includes: current class 3 and 4 locations; facilities with persons who are mobility-impaired, confined, or hard to evacuate, and places where people gather for recreational and other purposes. For facilities with mobility-impaired, confined, or hard-to-evacuate persons and places where people gather, the corridor of protection from the pipeline is 300 feet, 660 feet or 1000 feet depending on the pipeline's diameter and operating pressure. This final rule

is the first step in a two-step process to develop integrity management program requirements for gas transmission operators. In the second step, the Research and Special Programs Administration (RSPA) will propose requirements to improve the integrity of gas transmission pipelines located in these high consequence areas. This definition satisfies, in part, the Congressional mandate in 49 U.S.C. 60109 for RSPA to prescribe standards that establish criteria for identifying each gas pipeline facility located in a high-density population area.

RSPA developed the definition from the comments received on the notice of proposed rulemaking, and the earlier notice that invited public comment about integrity management concepts as they relate to gas pipelines. The definition does not yet require any specific action by gas transmission pipeline operators. Action will not be required until we issue integrity management program requirements that use the definition.

DATES: This rule is effective September 5, 2002.

FOR FURTHER INFORMATION CONTACT: Mike Israni by telephone at (202) 366–4571, by fax at (202) 366–4566, or by e-mail at *mike.israni@rspa.dot.gov,* regarding the subject matter of this rule; or the Docket Facility (202) 366–9329, for copies of this rule or other material in the docket. All materials in the docket may be accessed electronically at *http://dms.dot.gov.* General information about the RSPA/OPS programs may be obtained by accessing OPS's Internet page at *http://ops.dot.gov.*

SUPPLEMENTARY INFORMATION:

Background

On January 9, 2002, RSPA published a notice of proposed rulemaking (67 FR 1108) that proposed to define areas of high consequence where a gas pipeline accident could do considerable harm to people and their property. The proposed definition included as high consequence areas: Class 3 and 4 locations as defined in 49 CFR part 192; areas where a pipeline is within 660 or 1000 feet of a building with mobility-impaired or confined persons (hospitals, schools, retirement and day-care facilities); and areas where a pipeline is within 660 or 1000 feet of a place where 20 or more people gather at least 50 days in any 12-month period (playground, camping ground). The 1000-foot area was proposed for a pipeline with a diameter larger than 30 inches and operating at a pressure greater than 1000 psig.

In the Notice proposing the definition, we explained that because of differences in the physical properties and consequences of a gas release versus a hazardous liquid release, and the benefits of gas transmission operators already maintaining accurate data on population near their pipelines, the definition differed from the definition we developed for hazardous liquid pipelines (49 CFR 195.450). The primary differences were that we structured the proposed definition to use the data pipeline companies already collect and maintain, and we did not include environmentally sensitive areas. A more detailed discussion of why the definitions were structured differently for liquid and gas pipelines can be found in the NPRM (67 FR 1108; Jan. 9, 2002).

Advisory Committee Consideration

On July 18, 2002, the Technical Pipeline Safety Standards Committee (TPSSC) met to review the proposed high consequence area definition for gas transmission pipelines. TPSSC is the Federal advisory committee charged with responsibility for advising on the technical feasibility, reasonableness, cost-effectiveness, and practicability of proposed natural gas pipeline safety standards. The committee voted unanimously to approve our proceeding with the high consequence area rule with consideration of several issues. First, the committee recommended that the preamble clarify that, although the definition requires no specific action on the part of operators, the rule applies only to gas transmission pipelines. RSPA has made the clarification. Second, the committee recommended that wording be included in the preamble clarifying that the definition is the first step in the process of defining requirements for managing the integrity of gas pipelines. RSPA has clarified the preamble. The upcoming proposed integrity management rule for gas transmission pipelines will describe the additional integrity assurance measures gas transmission operators will be required to implement for pipeline segments that are located in high consequence areas. Third, the committee recommended that we modify the provision defining areas where people congregate to add the word ''known.'' RSPA agrees with the intent of this comment and has revised the definition and preamble to reflect this intent. Finally, the committee recommended that RSPA consider renaming the definition as ''Potential'' High Consequence Areas. In making this recommendation, the committee was under the impression that the proposed integrity management rule would give operators the opportunity to analyze high consequence areas using the ''potential impact zone'' concept to identify areas within the high consequence area where no additional integrity management measures would be required. Because this issue will be addressed directly in the upcoming proposed integrity management rule, RSPA believes that renaming the definition would not be appropriate.

Comments to NPRM

We received comments from 28 sources in response to the NPRM:

- Three (3) public interest groups or individual members of the public
  - Citizens for Safe Pipelines (a New Mexico citizens' group)
  - Cook Inlet Keeper
  - Gary L. Smith
- Five (5) state agencies
  - Iowa Utilities Board
  - State of New York Department of Public Service (NYDPS)
  - State of New York, Office of the Attorney General
  - Washington State Department of Ecology (Ecology)
  - Washington Utilities and Transportation Commission (WUTC)
- Five (5) industry associations
  - American Gas Association (AGA)
  - American Public Gas Association (APGA)
  - Gas Piping Technology Committee (GPTC)
  - Interstate National Gas Association of America (INGAA)
  - New York Gas Group (NYGAS)
- 18 natural gas pipeline operators
  - Baltimore Gas & Electric Company, ChevronTexaco, CMS Energy, Consumers Energy Company, Duke Energy Gas Transmission, El Paso Corporation, Enbridge Energy Company, Inc., Enron Transportation Services, Kinder Morgan, National Fuel Gas Supply Corporation, the Energy Distribution Segment of NiSource Inc. (NiSource EDG), North Shore Gas Company, Pacific Gas and Electric Company, PECO Energy, Peoples Gas Light and Coke Company, Questar Regulated Services, Southwest Gas and, Williston Basin Interstate Pipeline Company.
- One (1) risk management consulting company
  - Accufacts, Inc.
- One (1) suspension bridge engineering and construction company
  - SEFBO Pipeline Bridge, Inc.

In the following section we discuss these comments and how we addressed them in developing the final definition

of high consequence areas for gas transmission pipelines.

General Comments

Placement of Definition

The Notice proposed to place the definition of high consequence areas in a new section in Part 192, subpart M on integrity management.

Southwest Gas Corporation suggested that the definition of high consequence area be added to the general definition section in part 192 (§ 192.3) so that all definitions are in the same location.

Response: We will leave the definition of high consequence areas in the section on integrity management. Because this definition will be used in the forthcoming integrity management program regulations, it fits better in this section rather than in the section on general definitions.

Lines Covered

The proposed definition of high consequence areas applied to all gas transmission pipelines.

Several commenters recommended excluding certain low stress pipelines from the definition. These commenters explained that lower stress pipelines tend to result in leaks, rather than ruptures. Suggestions varied on which low stress pipelines we should exclude.

Many of the commenters (AGA, APGA, Consumers Energy, National Fuel Gas Supply Corporation, North Shore Gas, New York Gas Group, Peoples Gas, Questar, Southwest Gas) recommended that the definition be limited to transmission pipelines operating at or above 20% of specified minimum yield strength. Baltimore Gas & Electric recommended exempting transmission piping operated as part of and integral to a distribution system if the piping is operated below a determined pressure, such as 300 psig and is less than a determined diameter, such as 30 inches. CMS Energy recommended excluding from the definition pipelines that operate at pressures lower than 40% of the maximum hoop stress. Energy Distribution Segment of NiSource Inc. recommended that high consequence areas be limited to pipelines operating at or above 30% SMYS.

The Iowa Utilities Board suggested RSPA consider developing separate integrity management program requirements for pipelines operating at stress levels below 30% SMYS. The Utilities Board maintained that the C-FER method is not an appropriate indicator of the high consequence area for pipelines operating at stress levels below 30% SMYS. The Iowa Board explained that because these pipelines fail by leakage rather than by rupture, the C-FER formula significantly overestimates the potential impact zone. (More discussion on the C-FER formula appears later in this document.)

New York State Department of Public Service urged that integrity management be applied to all gas transmission pipelines, not just those that traverse a high consequence area. The Department suggested that pipelines in high consequence areas could have higher priority for testing and repair.

Response: We have not revised the definition to exclude pipelines operating below a certain stress level. The high consequence area definition applies to gas transmission pipelines, as those lines are defined in part 192. Lines not falling withing the definition of transmission line are not covered. We will consider ways to address transmission pipelines operating at lower stress in developing the proposed integrity management rule for gas transmission pipelines.

However, as discussed later in this document, we have added to the definition a 300-foot zone for small diameter pipelines operating at lower pressure.

As for extending integrity management to all transmission lines, RSPA's initial goal is to provide greater assurance of pipeline integrity in geographic areas where a gas pipeline rupture could do the most harm to people. Once we propose and implement the integrity management program requirements for the areas we define, we will study the results and consider how effective it would be to extend added protection to other areas.

Class 3 and 4 Locations—Proposed 49 CFR 192.761 (a) and (b)

The proposed definition of high consequence areas included class 3 and class 4 locations, as those areas are defined in § 192.5. In the Notice, we said that because class location definitions are based on population density, gas operators already maintain current data on the location of people in areas adjacent to their pipelines. It seemed more logical to structure a definition using this data rather than basing the definition on a Census Bureau definition, as we had done for hazardous liquid pipelines.

All commenters supported basing the definition of high consequence areas on current class location regulations.

However, several pipeline distribution companies (Baltimore Gas & Electric, NiSource EDG, PECO Energy) objected to RSPA's assumption that information about population density is in the hands of operators. These commenters explained that many local distribution companies utilized class four criteria when constructing a facility, and, therefore, never established a population density baseline and do not track changes in population density.

AGA and APGA disagreed with our statements in the NPRM about the quality, timeliness and accuracy of class location data. AGA and APGA objected to the assumption that class location regulations require operators to periodically monitor and record data on increases in population near their pipelines, and that this data monitoring gives an accurate picture of where people live and work who can be affected by a release. These associations explained that many operators in metropolitan areas design their transmission lines for a Class 4 location even though the classification might be a class 2 or 3; therefore, subsequent population increases do not require detailed surveys of the area. Or if a pipeline is in a class 3 location, the operator need only determine if buildings of four or more stories become prevalent, rather than perform a survey of population density. AGA and APGA further objected to our characterizing the data operators have on buildings within 660 feet as adequate to identify the high consequence areas. They explained that the existing house count data is good information but it may not be extensive, detailed or approach real-time analysis.

Consumers Energy pointed out that by including class 3 areas, the burden is placed on local distribution company feeder systems. The company explained that its entire system would be treated as a high consequence area whereas many cross-country pipelines have few class 3 areas. PECO Energy commented that annual aerial photography and weekly aerial or foot patrols would be needed to keep current information on populations or buildings within 660 feet of its pipeline.

Response: RSPA recognizes that some operators, particularly local distribution companies, may have designed their pipelines for a class 4 location, and, as a consequence, may not maintain current data on the number and location of buildings near their pipelines. However, we continue to believe that it is preferable to base a definition for high consequence areas for gas transmission operators on the existing class location definitions, and to allow the majority of operators to use the information they have on people and buildings near their pipelines rather than to base the definition on the Census Bureau

definitions. An operator who does not maintain the data needed to define a class location will need to decide whether to treat its entire system as being within a high consequence area, or to take steps to identify which segments of the system are actually in high consequence areas. Either decision will be acceptable to OPS.

Hard-To-Evacuate Facilities—Proposed §§ 192.761 (c) and (d)

The NPRM proposed to include areas where a pipeline lies within 660 feet of a hospital, school, day-care facility, retirement facility, prison, or other facility having persons who are confined, are of impaired mobility or would be difficult to evacuate. The proposed area of protection increased to 1000 feet for a pipeline greater than 30 inches in diameter and operating at a maximum allowable operating pressure greater than 1000 psig. In the NPRM, we said we wanted to ensure that areas where there are facilities with people who may not be able to evacuate the area quickly are better protected from a potential release.

The State of New York's Office of the Attorney General supported the proposed definition. As discussed below, other commenters recommended revisions.

AGA and APGA supported including areas with buildings occupied by persons with limited mobility, but maintained that we should better define these facilities to allow operators a reasonable chance of identifying them. The trade associations explained that it would be impractical for operators to identify ''other facilities having persons who are confined, are impaired, or would be difficult to evacuate'' because these facilities could include home-based day-care facilities housing only one or two people. APA and APGA proposed that we include clarifying language such as ''licensed facilities'' or ''known facilities that are visibly marked and occupied by a defined number of people.'' AGA and APGA also noted that the phrase ''difficult to evacuate'' could refer to either the building itself or to the occupants of the building.

Baltimore Gas & Electric maintained that it would have problems identifying facilities unless there is some publicly available data source. The distribution system operator argued that without corresponding data validation source references, the definition creates an unattainable requirement on system operators.

CMS Energy argued that there was no method for distinguishing what constitutes a facility or how many people need to occupy a building for it to be considered a school or hospital. The transmission system operator commented that a definition needs a minimum number of people that have to be associated with a day care facility, school or retirement facility to prevent including residences that are used for such purposes. CMS Energy suggested using the number from the outside area of the class 3 definition, because operators could use information currently available to them and minimal retraining of field personnel would be needed.

Consumers Energy commented that facilities, such as day care facilities, are difficult to discover because they may be small, located within homes and have short business lives. The company recommended adding a requirement that at least 20 persons occupy a facility for it to be included. Consumers Energy further suggested revising the phrase difficult to evacuate because the phrase could be interpreted as meaning the people are difficult to evacuate, or the facility is difficult to evacuate because of lack of staff.

Duke Energy recommended that the language be clarified to state that facilities must be public, licensed, and marked visibly as viewed from the nearest public roadway. Duke Energy argued that operators cannot be expected to determine the locations of private, home-based day-care facilities or private homes. The company further recommended that the phrase difficult to evacuate be removed because the language is vague.

El Paso commented that revising the definition to include facilities that are public, licensed and visibly marked when viewed from the nearest public roadway would help operators identify the facilities.

Enbridge recommended specifying that facilities have to be clearly identified by external signs. Enbridge explained that there are numerous family day-care settings, group homes for home-schooled foster children, ill or elderly, but that operators cannot be expected to identify these facilities unless they are marked. Enbridge further explained that because licensing requirements vary, operators cannot always get this information through public officials.

Enron Transportation supported including these facilities in the definition but suggested we clarify the definition by adding ''or other similar, well defined facility having persons who are confined * * *''

The Gas Piping Technology Committee suggested that RSPA discuss what attributes qualify a facility for coverage, whether commercial databases are available, and if public officials have this information. The technical committee recommended that facilities be known, and that they normally have at least 20 persons.

INGAA recommended that the facilities included in the definition be public, licensed and marked visibly from the nearest public roadway, because operators could not be expected to identify private, home-based daycare facilities or private homes with retirement-age people. INGAA further argued that the phrase difficult to evacuate is vague.

National Fuel Gas Supply Corporation suggested we more closely delineate the facilities covered by the definition because operators cannot identify unmarked homes with handicapped persons.

New York Gas Group commented that local distribution companies would not be able to identify these facilities. The trade association explained that unless the facilities are licensed or are on lists maintained by local municipalities, it would be too resource intensive and impractical to locate these facilities. New York Gas Group recommended that we require operators to obtain the lists on a periodic basis.

North Shore objected that the proposed language did not include a minimum number of people that have to be in a facility, and suggested a 20-person minimum. North Shore argued that without a minimum, places such as a small police station or in-home day care would be included. The distribution company further suggested that the definition require facilities to be known, and the phrase difficult to evacuate be clarified to apply only to facilities with confined or mobility-impaired persons.

Pacific Gas and Electric Company recommended specifying a minimum number of 20 persons in a facility. The company also recommended we require that the facility be licensed to help ensure the information is available or that we work with the states to develop a database of all facilities that should be considered high consequence areas.

PECO Energy recommended specifying that the facilities be known facilities to ensure that operators have knowledge of the facility. The company explained that small operators might not have knowledge of newer facilities constructed or buildings renovated for these purposes.

Peoples Gas recommended adding a lower bound on the number of people that are present in the facility, and to add the word ''known.'' Peoples Gas suggested that the phrase difficult to

evacuate apply to facilities with confined or mobility-impaired persons and not be an additional, separate factor because any structure in an emergency could be difficult to evacuate.

Questar commented that it was unclear if the proposed language refers to buildings that are difficult to evacuate because of the number of occupants, the design of the building, or because the occupants are confined or are impaired. Questar argued that the focus should not be on building design. Questar was not in favor of including schools in the examples. Questar explained that schools would probably be covered under the existing class location definitions, and that many types of schools are not in use all week and are not occupied by persons with impaired mobility. The company suggested that because day-care facilities may be home-based, and not visibly marked, and not known to local governments, and because certain types of retirement facilities may be difficult to identify, we should limit the definition to licensed day care and retirement facilities that are clearly marked and visible from a public roadway. Questar further recommended adding a threshold number of occupants, such as 20.

Gary Smith favored including a distance greater than 660 feet from a larger diameter pipeline for individuals with limited mobility, but did not know how realistic it would be to monitor for such individuals.

Response: RSPA has revised the definition to better define the types of facilities that are to be included. We have clarified that the facilities we are focusing on have people that because of impaired mobility or because they are confined, or because of other reasons, such as age, would be difficult to evacuate. The definition makes clear that it is focusing on the occupants not the design of the building.

We have added a requirement that the building with the occupants who are confined, mobility-impaired, or hard to evacuate has to be an identified site. An identified site is a building that can be identified through any of the following means—it has a sign; it is licensed or registered by a federal, state or local agency; it is known to public safety officials; or it appears on a list or map that is available through a federal, state or local agency, or through a publicly available or commercially available database. This revision should alleviate the concern that operators will be required to identity a family home that has elderly or disabled persons, or day-care age children.

We have kept schools in the list of examples. We agree that many schools will likely fall within the definition for a class 3 or 4 location, and that many may not contain persons who are mobility-impaired. However, schools are facilities occupied by groups of people, most likely children, who may, because of their age, number or fear, be difficult to organize and evacuate during an emergency.

We have not required that these be public facilities. Many day care facilities and assisted-living and retirement facilities and communities are private. To limit the definition to public facilities would eliminate a great number of facilities housing children and the elderly. We have not specified a minimum number of occupants that need to be in these facilities because the populations in these facilities are in constant flux. Although a facility can be identified because it has a sign or is on a list maintained by a governmental agency, it is unlikely there would be information on how many persons occupy the facility.

The information many operators currently maintain on people and buildings near their pipelines should help operators to identify these facilities. This information may have to be supplemented with patrols that specifically look for these types of facilities along the right-of-way. This information will need to be periodically updated to ensure that newer facilities are not overlooked. To supplement this information, government websites provide listings of nursing homes, assisted-living facilities and communities that house elderly. For example, the Federal Government's Firstgov (*www.firstgov.gov*) website provides information on nursing home and elder care facilities in all areas of the country, as well as providing information on state websites, and state and local agencies that can be contacted for information to help locate facilities. The website also provides a hyperlink to the National Center for Education Statistics, which lists all private and public schools in any geographic area. In addition, telephone directories offer a listing source for many of the types of facilities an operator will need to identify. Addresses obtained through phone listings can be located using commercially available Web sites such as mapblast (*www.mapblast.com*) or mapquest (*www.mapquest.com*).

Areas Where People Congregate—Proposed § 192.761(e)

The proposed definition of high consequence area included an area where a pipeline was within 660 feet or 1000 feet, depending on the diameter and operating pressure of the pipeline, of a place where 20 or more persons gather at least 50 days in any 12-month period. We listed examples of beaches, camping grounds, recreational facilities and museums. The 20-person minimum used in the proposed definition was based on the number used in the current definition of a class 3 location, and it was a number we believed typical of the number of people that frequent a recreational area. We stated that although gas transmission operators are not currently required to maintain data on areas where people congregate near their pipelines, they are required to patrol their pipeline rights-of-way, and should have knowledge about these areas. We further stated that this information should also be available from local public safety officials.

AGA and APGA thought this part of the definition should be limited to well-defined outside areas. The associations were against including buildings, such as museums, because they are likely covered by other parts of the definition, and against including seldom-used or unmarked buildings, which would require daily patrols to identify. AGA and APGA further suggested that the frequency of usage be 20 or more persons at least 5 days a weeks for ten weeks, because that is consistent with current regulations requiring operators to survey areas within 330 feet of the pipeline for well-defined areas.

Baltimore Gas & Electric maintained it was not practical or attainable to analyze every place where people may congregate on an intermittent basis.

Chevron Texaco was opposed to including places where people might congregate, and preferred focusing the definition on cities, towns, buildings and roads. Chevron thought that using Carlsbad as an example was too broad and could end up including all areas unless on company-owned property.

Citizens for Safe Pipelines urged that public recreation areas be included. The group thought that the proposed standard was too high and would be difficult to measure, and suggested that the standard should simply be evidence of public use, including evidence of vehicle traffic or camping sites, particularly near watercourses. The citizens' group explained that in the west, watercourses are places where people congregate on public land for recreation. The group recommended that operators use regular aerial patrol and consult with public land management and local government officials to identify these areas. The group also recommended including religious buildings, because significant numbers of people regularly congregate in these buildings.

Consumers Energy commented that the example of a museum did not fit because the proposed definition was aimed at outdoor facilities. The company maintained that the language was too broad and should be limited to well-defined areas, or data would be difficult to develop and maintain. Consumers Energy further maintained that the proposed occupation period was too restrictive, and too hard to identify, and suggested using a weekly basis for the occupation period or eliminating it.

Cook Inlet Keeper was not convinced that the proposed definition would cover the location of the Carlsbad pipeline accident. The organization recommended that to ensure that Carlsbad and similar areas are covered, we lower the proposed 50-day threshold, and instead, use as the trigger whether the operator has any knowledge of periodic use for recreational or other purposes.

CMS Energy maintained that the proposed definition would require operators to monitor pipelines 24-hours, 7 days a week, 365 days a year. The company objected that the proposed language could be interpreted to include areas, such as large parks or golf courses where people might not be close to the pipeline. CMS Energy objected to the example of a museum because this expands the definition to include buildings, and buildings such as rural churches might be covered. The company recommended limiting the area to a small, well-defined area within 220 yards (or 333 yards for larger pipelines).

Duke Energy acknowledged the difficulty in defining areas where people gather. The company suggested using 50 days when defining the frequency of use, a rate that would cover one day per week or a full weekend during the summer months. Duke maintained that the word area by itself was too illusive, and should be modified by the phrase ''small, well-defined outside area.'' Duke explained that without this modification, operators would have to include beaches, parks or other large areas. Duke suggested removing museums as an example because current regulations address land use associated with structures such as office buildings, restaurants and museums, but do not address outdoor areas where people gather for weekend-type use. Duke argued that use of the word outside is critical to capture the recreational land user.

Enbridge recommended that we revise the definition to focus on areas of significantly higher consequence. Enbridge suggested focusing on areas of significant, specific, well-defined outdoor congregation, otherwise, the proposed criteria would incorporate rural places of worship or other facilities used only for an hour or two per week. Enbridge further recommended that the definition specify areas that are clearly and publicly identified, because operators can only be expected to identify areas that have visible signs, or are on official local maps or in public information sources. The operator suggested that we base the definition on data that is public, accessible and verifiable.

Enron was against including buildings such as museums because these have multiple exits and would be protected from an accident. Enron recommended that the definition focus on small, well-defined outdoor areas, because operators will not be able to identify areas used on occasional weekends or evenings unless they are defined.

The Gas Piping Technology Committee noted that the proposed definition targets weekend activity, which will require operators to conduct weekend patrols at some frequency. The committee suggested RSPA clarify if its intent is to include organized congregation in camping grounds and other areas or to include any place where people congregate. The committee suggested revising the definition to include known areas, at established weekend or seasonal recreational facilities, such as campgrounds, beaches, or parks within a well-defined area.

INGAA expressed concerns with the proposed definition. INGAA argued that local officials could only be expected to identify well-defined and frequently-used areas, and that it was unreasonable to expect operators to identify areas, similar to the Carlsbad site, that are undefined and infrequently used. The industry association objected to including museums in the examples of areas where people congregate, because operators would have to include buildings or structures, particularly, seldom-used buildings, such as rural churches or bingo halls. INGAA commented that having to include these seldom-used structures would require operators to increase the frequency of monitoring, and to monitor on weekends and evenings. INGAA submitted substitute language that it maintained is more consistent with existing regulations, and easier for operators to comply with. This language defined the areas as small, well-defined outside areas within 660 feet of a pipeline, and occupied by 20 or more people on at least 5 days a week for ten weeks in any 12-month period. The association argued this language would preclude operators from having to include large facilities of low usage, such as golf courses or national parks. INGAA explained that requiring an area to be well-defined would allow better utilization of land use data operators have collected, and that a usage rate of 5 days a week would not require surveillance during evening and weekend hours and is more consistent with existing regulations.

Kinder Morgan suggested that areas where people congregate only be included if they are within the pipeline's defined hazard area calculated from the C–FER model.

National Fuel commented that the proposed area would be too difficult to define, and should be revised to refer to small, well-defined outside areas.

NiSource EDG disagreed with our statement in the NPRM that the patrolling frequency required in the class location regulations is sufficient for an operator to have knowledge of where people congregate near its pipeline. The company thought only daily patrolling would uncover the proposed level of use. NiSource EDG was not aware of any public safety agency that collects, maintains and distributes recreational land use information on a statewide basis. NiSource EDG further commented that the proposed definition was subjective and imprecise, and should be revised to enable operators to identify with a level of certainty and precision the kinds of facilities that make an area high consequence.

New York Gas Group commented that based on its members' experience, it is unlikely that the proposed areas could be identified under current patrolling requirements. The trade association maintained that securing this information would require an excessive resource expenditure for expanded patrolling. New York Gas Group further maintained that such information is not available from local officials or available in standardized format.

New York State Department of Public Service commented that it is unclear whether we intended for areas where people congregate to include facilities such as transportation terminals, manufacturing facilities or business locations, and recommended clarifying the language to include these facilities. The Department of Public Service questioned the basis for the 20 or more persons congregating at least 50 days in a 12-month period, and explained that a stadium or arena may be used less than 50 days per year but, nonetheless, attract large crowds to individual events.

North Shore Gas suggested that the areas where people congregate be known and well-defined. The company also suggested the usage rate should be 5 days a week for 10 weeks in a 12-month period instead of the proposed 50 days in 12 months, because it would be easier for operators to monitor. North Shore Gas thought that the example of a museum is out of place if outside areas are being targeted.

Pacific Gas recommended that RSPA provide the pipeline industry with references to help identify public gathering areas or provide additional guidance for identifying these locations. The company further recommended that we revise the definition to known locations that can be identified by patrols during the business week.

PECO Energy suggested adding the words known or established because small operators might not have knowledge of these facilities. The company argued that operators could be forced to instigate weekend surveillance to identify the proposed areas.

Peoples Gas recommended that areas an operator has to identify be known and well-defined. Peoples Gas suggested changing the proposed 50 days of occupancy to 5 days per week for 10 weeks, otherwise, increased monitoring is needed. The company further suggested that we delete museum from the examples to focus on outdoor areas.

Questar recommended focusing the definition on well-defined outside areas where large groups of people congregate near gas transmission pipelines, and requiring that the areas be known and controlled by public officials. Questar was opposed to including buildings because they are picked up in other sections of the definition, and seldom-used buildings would be difficult to identify.

Response: We have revised the part of the definition addressing areas where people congregate. The intent in including these areas was to pick up areas that are used for recreational purposes. Such areas typically are used on weekends, and after business hours. Although an operator may only patrol during business hours during the week, it may have to expand its efforts to identify areas that people frequent at other hours. A pipeline does not shut down during evening and weekend hours, when people are using these areas. Even if an operator does not expand its patrolling, it should be able to identify these areas through its procedures for continuing surveillance or through its communications with local public safety officials.

We have revised the definition to require that there be evidence of use at an identified site. As with the buildings with mobility-impaired or confined persons, an identified site is a building or outside area that has a visible sign, is registered or licensed by a Federal, State or local agency, is known by public officials, or is on a list or map available through a Federal, State or local agency or that can be obtained through a publicly available or commercially available database. At the site there needs to be evidence that the site is used by 20 or more persons on at least 50 days in any 12-month period. These revisions should alleviate concerns operators expressed about the proposed definition being too vague and the areas too difficult to identify. The definition now provides criteria for identifying locations where people congregate.

We have revised the examples. In the list of examples, we have included stadiums. Although stadiums holding large crowds may be located in Class 3 or 4 locations, we want to ensure such facilities are not ignored if they are located in a less densely populated area. We have added buildings used for religious purposes because groups of people are likely to gather in these buildings on weekends and in the evening. We have also added crossings of water bodies to the examples. We agree with the comment that the area near a pipeline crossing of a waterway may be used as a camping or recreational area.

We have not added modifiers, such as small and well-known. An adjective such as the word small is open to interpretation. One person's idea of small could be 10 feet, whereas another operator might consider 500 feet as small. Similarly, there would likely be disagreement about what makes an area a known area. Would it be enough that local residents know and frequent the area or would it have to be on a list maintained by a local agency for it to be known? What if it is an area known by local officials but the operator only conducts patrols during the week and has no knowledge that it is being used on weekends? By requiring that there be evidence of use at an identified site we are focusing on any area that can be identified as an area where there is regular activity by people around the pipeline.

Although concern was expressed that golf courses and national parks may have to be included, the area that needs to be looked at is only 300, 660 or 1000 feet from a pipeline. Even if the area falls within a large area as a golf course or park, the operator only has to determine if the specified area around the pipeline shows evidence of regular use by people, or the operator can assume that people regularly frequent the area near the pipeline.

We have not limited the definition to outside areas but have included other structures that may be used for recreational or other purposes during weeknight or weekend hours. As explained above we included in the examples stadiums and religious buildings. We have taken out the example of a museum, because we agree that this type of building is most likely covered under the class location definitions.

We have not changed the usage rate from what was proposed. We believe this is a valid rate to pick up areas that are used as recreational areas because the rate will support identification of areas that are used only during week days in a typical ten (10) week summer, and areas that are used only on weekends throughout the entire year. The number of people is appropriate for a recreational activity such as baseball, football or soccer, and for a moderately used facility such as a campground.

We continue to believe that evidence of recreational use can be determined through required patrols of the pipeline right-of-way, perhaps, supplemented with patrol on a weekend or after business hours during the week. Operators are already required to have procedures for continuing surveillance and to have emergency procedures that provide for maintaining communication with public officials. Thus, it should not be burdensome for operators to consult with these officials to determine if the officials have knowledge about these areas. In addition, most recreational areas will be designated areas such as parks or campgrounds for which records are retained by governmental units at the local, county or state level.

660 and 1000-Foot Corridors

Where a pipeline is near a building with mobility-impaired or confined persons, or near an area where people congregate, we proposed that the protected area from the pipeline should be 660 feet or 1000 feet, depending on the diameter and operating pressure of the pipeline. In the NPRM we explained that we based the proposed 660-foot and 1000-foot corridors on a model developed by C–FER, a Canadian research and consulting organization. (More information on this model is in Docket #7666). The C–FER analysis was based on a simplified model of a gas pipeline rupture. The model included a simplified mathematical treatment of several phenomena important to characterizing the extent of damage following a pipeline rupture, as for

example, critical heat flux, the time of ignition of the escaping gas, the height of the burning jet, and the pipe decompression rate. The model also included estimates of several important parameters associated with the phenomena. The model validated the distance of 660 feet as the impact area for pipelines smaller than 30 inches in diameter and operating at 1000 psig or less. The model also showed that a pipeline with a diameter greater than 30 inches and operated at a pressure greater than 1000 psig has the potential to impact an area greater than 660 feet from the pipeline.

Several commenters supported our expanding the area of protection from 660 feet to 1000 feet to accommodate large pipelines operating at high pressure, but recommended decreasing the area for small-diameter pipelines operating at low pressure. These operators maintained that a decreased area would reduce the costs of surveillance and record keeping.

APA and APGA recommended that instead of the proposed 660 and 1000 foot corridors, a high consequence area be defined by the C–FER equation. AGA and APGA explained that this equation would calculate the pipeline affected zone i.e., the zone affected by the heat emitted from the burning gas.

CMS Energy urged RSPA to include along with the proposed 660-foot and 1000-foot corridors, a smaller corridor for small diameter, lower pressure lines. CMS explained that this would more accurately use the information in the C–FER report and allow operators to use technical justification to concentrate on areas of greater consequence.

Consumers Energy observed that using the C–FER model for smaller pipelines operating below 1000 psig would reduce the area of influence but that the model is more useful because it uses actual pipeline attribute data to determine the heat affected zone.

El Paso encouraged that, instead of the 660 and 1000-foot areas, we incorporate into the definition the concept of a pipeline-affected zone, as used in the C–FER study. Enbridge made the same recommendation.

GPTC commented that the C–FER Report forms a sound technical basis for determining a zone of thermal influence for a potential gas pipeline rupture, but that the simplified model we used does not consider small diameter low pressure pipelines.

INGAA recommended that we include the pipeline-affected zone equation used in the C–FER study so that operators could better use the data they have been collecting since 1970. INGAA argued that use of programmed distances, such as the proposed 660 feet and 1000 feet, does not utilize the findings of the C–FER study.

The Iowa Utilities Board commented that two pipelines in the State and at least one that is proposed for construction in Iowa would have impact zone widths of greater than 1000 feet, using the C–FER formula. The Board also pointed out that the C–FER formula will predict smaller impact zones than those proposed for some pipelines having diameter greater than 30 inches with operating pressure over 1000 psig. The Iowa Board suggested we consider specifying operators use the C–FER formula for pipelines with diameter greater than 30 inches and operating pressure over 1000 psig rather than the proposed 1000-feet limit.

New York Department of Public Service maintained that the heat flux value of 5000 btu/hr-ft^2 used in the C–FER formula is too high. A lower critical heat flux value should be used, which would increase the width of the predicted impact zone.

Pacific Gas and Electric recommended using the C–FER equation in class 3 and 4 areas to determine which portions of these areas require an integrity management plan, and focusing efforts on those portions where the pipeline's impact zone encompasses a structure such as a school or hospital containing a specified number of people. The company further suggested that the definition use the C–FER equation to determine the extent of the pipeline that requires integrity verification.

Questar recommended that operators be allowed to use the C–FER equation to determine the pipeline affected zone rather than the proposed 660 or 1000 feet.

The State of New York, Office of the Attorney General supported the 660 and 1000-foot areas, but cautioned that the C–FER model used to define these dimensions does not consider low-angle, horizontal jet fires. The New York State Attorney General's office explained that this type of rupture would cause more of the heat-radiating flame surface to be concentered near the ground surface in the direction of the initial horizontal jet, potentially creating a heat flux for more than 1000 feet.

Williston Basin agreed that zones of damage can extend out from the current class location defined distance of 660 feet during a release, but disagreed with applying the C–FER model only when the hazard radius exceeds 660 feet. The company thought the model should be applied over the full spectrum of pipeline operating conditions because more can be accomplished by focusing resources on the hazard radius area.

Response: RSPA has revised the definition to include a third zone for small diameter, low pressure pipelines. For a pipeline with a diameter of 12 inches or less and an operating pressure of 1200 psig or less, the area of protection will be 300 feet. Although the C–FER model predicted a potential impact area of less than 300 feet for a pipeline of the above-specified size, we will not include an area smaller than 300 feet. In addition, RSPA is further exploring ways to address low stress pipelines in the proposed gas pipeline integrity management rule. We are also considering the comment about use of the C–FER model in calculating the zone of impact in developing that proposed rule. While arguments, such as that by the New York State Attorney General's Office, may be theoretically possible, the actual incident data developed at gas pipeline rupture sites over a twenty-year period were used to validate the predictions of the C–FER model. Thus, a spectrum of different events produced burn radii that were reasonably accurately predicted by the simple formulation contained in the C–FER model. The forthcoming proposed integrity management rule will address situations where the pipe diameter and operating pressure are sufficiently large that the predicted impact zone using the C–FER model could exceed 1000 feet.

Other Area of Potential High Consequence Not Proposed

Environmental Areas

In the NPRM we explained because of the way gas products behave, a rupture would affect a very limited area, and would not pollute drinking water or ecological resources. Because any environmental consequences following a rupture would be limited, we did not include environmentally sensitive areas in the proposed definition.

Citizens for Safe Pipelines recommended adding watercourses to better protect these areas from spills of natural gas condensates.

Cook Inlet Keeper favored adding environmentally sensitive areas because natural gas condensates form in transmission pipelines and can pose environmental hazards. Cook Inlet Keeper also listed eight recent releases of natural gas pipeline condensates (spills of up to 10 gallons of condensate) in the Cook Inlet region in Alaska.

The State of New York, Office of the Attorney General recommended including pipelines within the Great Lakes because of environmental sensitivity.

The Washington State Department of Ecology recommended including

unusually sensitive areas and navigable waterways as high consequence areas, because these may be affected by a fire ignited by a gas pipeline rupture. The Department also recommended that we require operators to consult with state and local government officials to identify environmentally sensitive areas.

The Washington Utilities and Transportation Commission urged RSPA to include environmentally sensitive areas in the definition. The Commission explained that a habitat for a threatened or endangered species in the heat affected zone could be destroyed by a pipeline rupture and ignition. The Commission also urged that operators be required to consult with state and local government agencies to ensure that environmentally sensitive high consequence areas have been correctly identified.

Response: As we explained above in the section discussing areas where people congregate, we have added recreational areas near water bodies to the definition. However, we have not revised the definition to include environmental areas. RSPA believes that the limited physical impact of a gas pipeline rupture and the short duration of the impact justify excluding these areas. A natural gas release is limited to the area immediately adjacent to the pipeline, so that any resulting fire would do limited damage to a sensitive area or to a species in the area. We recognize that gas condensates that form in gas transmission pipelines can pose an environmental hazard should the pipeline rupture. However, because we believe that these discharges tend to be small and do limited damage, we are not at this stage including these areas in the definition.

Other Areas

Cook Inlet Keeper recommended adding to the definition high-traffic areas and passenger and flammable cargo rail areas. The organization also recommend including religious buildings because significant numbers of individuals are confined in these buildings on a regular basis.

The New York State Department of Public Service thought the definition should be expanded to consider important infrastructure including major electric transmission corridors and substations, other pipeline facilities, bridges, major roads and railways. The Department recommended we also consider historic landmarks near transmission pipelines and services that would be disrupted and would have a major impact on people and businesses.

SEFBO argued that pipeline bridges represent potential high consequence areas in themselves, and should be separately included as high consequence areas. SEFBO agreed that pipeline crossings of roads, highways and railroads should not be included because disruption from an explosion of a gas pipeline at such a crossing should be fairly localized and relatively short. According to SEFBO, an explosion of a natural gas pipeline on a bridge poses a unique risk of substantial economic disruption, and on a heavily traveled bridge may cause injury or death to a substantial number of persons.

Washington State Department of Ecology pointed out that recent experience has shown that a rupture of a gas pipeline could impact a near-by liquid pipeline (within 1000 feet), causing an explosion or oil spill.

Response: The primary purpose of this definition is to define areas where a pipeline rupture would lead to the greatest consequences to the public. Most areas are adequately protected by current pipeline safety regulations. In most cases, a rupture of a gas pipeline will result in limited physical damage from a pipeline rupture, and be of short duration (one or more hours). We are focusing the definition on those areas where additional protection may be necessary because the consequences to people are potentially the greatest. Except for those areas previously discussed, we have not revised the definition to include the suggested areas.

Our review of accident data concluded that the maximum spill from a gas rupture resulting in a spill from a liquid pipeline has been too small to necessitate additional protection. We believe the impact of pipelines on infrastructure is adequately treated by existing regulations, although we will consider the comments about pipeline bridges in developing the integrity management program requirements. For example, pipelines supported by bridges (vehicular, railroad, pedestrian, pipeline), or that cross public roads, highways or railroads have special design factors. (§ 192.111). Special welding requirements apply to pipeline crossings of rivers, railroads, highways, tunnels and bridges (§ 192.243). More frequent patrols are required at highway and railroad crossings (§ 192.705).

As previously discussed, we added religious buildings to the list of examples of areas where people congregate. Transportation terminals, manufacturing facilities or business locations would usually fall within a class 3 or 4 location, or be covered under the high consequence area definition if they normally have 20 or more people on at least 50 days a year.

Costs Associated With the Definition

In the NPRM, we explained that the proposed definition had no cost impact on the pipeline industry because the definition did not by itself require an operator to take action. Costs would be incurred once we issued integrity management program requirements that required an operator to take action on transmission pipelines located in these areas.

AGA and APGA thought we should consider in this rulemaking the initial costs associated with determining the high consequence areas, including identifying the areas, documenting them and verifying them periodically.

The Gas Piping Technology Committee also pointed out that we had not considered the initial costs, the frequency of verification and the potential recurring costs associated with determining the high consequence areas. The Committee recommended we consider these costs in this rulemaking so as not to overlook them in the integrity management program rulemaking.

Kinder Morgan commented that operators will incur additional costs to determine the applicability of the definition, and will have to gather additional information to identify the facilities with mobility-impaired persons and areas where people congregate. The company noted that operators will also have to conduct additional field surveys to identify the facilities and areas within 1000 feet of a pipeline.

New York Gas Group commented that the definition would require additional company resources and significant paperwork to identify facilities with mobility-impaired persons and areas where people congregate in class 1 and 2 areas.

NiSource EDG observed that this definition will drive future costs because it will dictate the integrity management actions an operator will have to take with respect to those pipelines located in the high consequence areas.

Questar commented that we need to discuss the incremental costs associated with determining the high consequence areas, such as the incremental costs for identifying, documenting and re-verifying the high consequence areas, and expanding the survey corridor.

Williston Basin commented that assessment costs are a significant expense and that the definition will directly affect assessment costs. The company argued that because the high

consequence area definition and integrity management rulemaking are directly related, the definition cannot be complete without evaluating the definition under the requirements of the integrity management rule.

Response: We have not changed our conclusion that there are no costs associated with the definition because the definition by itself does not require an operator to take any action. We recognize that once we issue regulations requiring action based on this definition, there will be costs. Thus, when RSPA issues its notice of proposed rulemaking for gas integrity management, RSPA will estimate the cost to gas pipeline operators to determine which segments in its system satisfy the definition of high consequence areas, and other costs associated with identifying and periodically re-verifying the areas.

The Final Rule

In the final rule RSPA has defined high consequence areas to include—

- *Class 3 areas.* A Class 3 area is defined in the pipeline safety regulations as a class location unit with 46 or more buildings intended for human occupancy. A class location unit is an area that extends 220 yards on either side of the centerline of any continuous one-mile length of pipeline. A class 3 area is also an area where the pipeline lies within 100 yards of either a building or a small, well-defined outside area, such as a playground, recreation area, outdoor theater, or other place of public assembly, which is occupied by 20 or more persons on at least 5 days a week for 10 weeks in any 12-month period. Neither the days nor the weeks need be consecutive.
- *Class 4 areas.* A Class 4 area is any class location unit where buildings with four or more stories are prevalent.

We have included class 3 and 4 location areas, as those areas are defined in § 192.5, to give additional protection to populated areas from a gas release. These areas will encompass about 85% of populated areas. These are the areas where most gas transmission pipeline operators maintain data on population and buildings near their pipelines. However, because the class location definitions may not cover all areas where a pipeline may pose a risk to the public, we have also included as high consequence areas:

- Areas where the pipeline is within 300, 660 or 1000 feet of a building occupied by persons who are confined, or are of impaired mobility, or would be difficult to evacuate, and
- Areas where the pipeline is within 300, 660 or 1000 feet of a building or outside area where 20 or more persons congregate at least 50 days in any 12-month period. (The days need not be consecutive.)

The definition picks up facilities with people who may not be able to evacuate an area quickly and most recreational areas or other areas where the public may not live, but may gather regularly for recreational or other purposes. Our analysis of data on the area affected by a pipeline accident demonstrated the need for special consideration of buildings located near a pipeline that house people with limited mobility and of areas where people congregate. These last two elements explicitly include distances between the pipeline and the facility or recreational area where greater protection will be provided. Defining these distances is necessary for two reasons. First, there is a need to limit the magnitude of the search to identify facilities and recreational areas that can potentially be affected by a pipeline rupture. Second, recently completed research has defined the extent of the area potentially affected by a pipeline rupture and subsequent ignition and fire. The results from this research has been used to define the distances we have included in the definition.

Our analysis of research data on the area affected by a pipeline accident demonstrated that, for most pipelines, the area affected by the rupture and fire extended no greater than 660 feet from the pipeline. The recently completed research demonstrated that the extent of the area potentially affected by a rupture increases in direct proportion to the square root of the pressure at which the pipeline is operated, and increases in direct proportion to the pipe diameter. Therefore, the rupture of smaller pipelines can impact facilities and recreational areas at distances less than 660 feet, and the rupture of larger pipelines can impact facilities and recreational areas at distances greater than 660 feet. Our analysis determined that, for a pipeline with a diameter of 12 inches or less and a maximum allowable operating pressure of 1200 psig or less, the distance from the pipeline of potential impact is 300 feet. For pipelines with a diameter greater than 30 inches and a maximum allowable operating pressure greater than 1000 psig, the distance from the pipeline of potential impact is 1000 feet.

The research that we used as the basis for the 300, 660 and 1000-feet distances is in the docket and is referred to as the C–FER model. We compared the predictions from the C–FER model against RSPA accident data and concluded that the impact distances predicted by the model are consistent with the burn radii observed in accidents that have occurred during the past twenty years. For example, a rupture of a 30-inch diameter pipeline operating at a maximum pressure of 1000 psig would affect an area no greater than 660 feet from the pipeline. Our research also showed that a rupture or release from a smaller-sized pipeline (a pipeline 12 inches or less in diameter and operating at a pressure of 1200 psig or less) would affect an area no larger than 300 feet from the pipeline. Therefore, for these smaller pipelines, we have defined a smaller area in which operators must identify buildings housing mobility-impaired or confined people and areas where people congregate. Similarly, for larger pipelines (a pipeline with a diameter greater than 30 inches and operating at a pressure greater than 1000 psig), we have defined a larger area of 1000 feet from the pipeline.

Because operators were concerned that they would be required to identify home-based day care and private homes with elderly occupants, the definition provides that the facility has to be an identified site. An identified site would be a building with confined or mobility-impaired persons that can be identified by any of several means: it has a sign; it is licensed or registered by a Federal, State or local authority; or it is on a list or map that is available from a Federal, State or local authority, or through a publicly available or commercially available database. Similarly, because of concerns raised about identifying recreational areas where people congregate, we have required that the building or outside area be an identified site (described above) that has evidence of use by 20 or more persons on at least 50 days a year.

The areas we have defined as high consequence areas go beyond current pipeline safety regulations in the following ways:

1. A current Class 3 location includes buildings or areas where people congregate located within 300 feet of the pipeline. The definition extends these areas out to 660 feet for pipelines of diameter greater than 12 inches and out to 1000 feet for larger pipelines (those greater than 30 inches in diameter and operating at pressures greater than 1000 psig).
2. Current Class location regulations include no explicit provision for facilities housing people with limited mobility. The definition includes these facilities.
3. The definition places more emphasis on areas where people congregate near a pipeline, such as

camping grounds and recreational areas near bodies of water. These areas may not be identified under the current class 3 location definition.

Regulatory Analyses and Notices

Executive Order 12866 and DOT Regulatory Policies and Procedures

DOT considers this action to be a non-significant regulatory action under section 3(f) of Executive Order 12866 958 FR 57135;October 4, 1993). Therefore, the Office of Management and Budget (OMB) has not reviewed this rulemaking document. This final rule is also not significant under DOT's regulatory policies and procedures (44 FR 11034; February 26, 1979).

Several commenters to the proposed rule (67 FR 1108–1115, January 9, 2002) disagreed with RSPA's determination that the proposed rule would incur no costs because it was only a definition. These comments were discussed above. As we previously explained, this definition does not require operators to take any action. Until there are requirements for the pipeline segments that are located in the high consequence areas we have defined, there are no cost impacts on the pipeline industry or the public. The costs will be incurred when we issue integrity management program regulations that require gas transmission operators to take actions on pipelines located in the high consequence areas. When we issue proposed regulations on integrity management for gas operators, we will then consider the costs involved in identifying and periodically re-verifying the high consequence areas.

Regulatory Flexibility Act

Under the Regulatory Flexibility Act (5 U.S.C. 601, *et seq.*) RSPA must consider whether a rulemaking would have a significant impact on a substantial number of small entities. This final rulemaking will not impose additional requirements on pipeline operators, including small entities that operate regulated pipelines. As this action only involves a definition, there are no cost implications, and thus we have determined it has no immediate impact on small entities. Costs are likely to result once we issue requirements for actions that use this definition. When RSPA proposes integrity management requirements for gas transmission pipelines in high consequence areas, RSPA will then examine the costs and benefits of the proposed requirements, including actions based on the high consequence area definition. Based on this information demonstrating that this rulemaking will not have an economic impact, I certify that this final rule will not have a significant impact on a substantial number of small entities.

Paperwork Reduction Act

This final rule contains no information collection subject to review by OMB under the Paperwork Reduction Act of 1995 (44 U.S.C. 3507 (d)). Therefore, RSPA concludes the final rule contains no paperwork burden and is not subject to OMB review under the paperwork Reduction Act of 1995.

This final rule defines high consequence areas, but does not require an operator to take any action. The definition will be used in the forthcoming rulemaking on ''Pipeline Safety: Pipeline Integrity Management in High Consequence Areas (Gas Transmission Operators)''. RSPA will prepare a paperwork burden analysis for that proposed rule.

Executive Order 13084

This final rule was analyzed in accordance with the principles and criteria contained in Executive Order 13084 (''Consultation and Coordination with Indian Tribal Governments''). Because this final rule does not significantly or uniquely affect the communities of the Indian tribal governments and does not impose substantial direct compliance costs, the funding and consultation requirements of Executive Order 13084 do not apply.

Executive Order 13132

This final rule was analyzed in accordance with the principles and criteria contained in Executive Order 13132 (''Federalism''). This final rule does not have any requirement that:

(1) has substantial direct effects on the States, the relationship between the national government and the States, or the distribution of power and responsibilities among the various levels of government;

(2) imposes substantial direct compliance costs on States and local governments; or

(3) preempts state law.

Therefore, the consultation and funding requirements of Executive Order 13132 (64 FR 43255; August 10, 1999) do not apply. Nevertheless, in public meetings on November 18–19, 1999, and February 12–14, 2001, RSPA invited the National Association of Pipeline Safety Representatives (NAPSR), an organization that includes State pipeline safety regulators, to participate in a general discussion on pipeline integrity. RSPA also had conference calls with NAPSR to receive their input before proposing a definition of high consequence areas. Several state agencies responded to the NPRM and their comments were considered in developing the final definition.

Unfunded Mandates

This final rule does not impose unfunded mandates under the Unfunded Mandates Reform Act of 1995. It does not result in costs of $100 million or more to either State, local, or tribal governments, in the aggregate, or to the private sector, and is the least burdensome alternative that achieves the objective of the rule.

National Environmental Policy Act

We analyzed the final rule for purposes of the National Environmental Policy Act (42 U.S.C. 4321 *et seq.*) and determined the action would not significantly affect the quality of the human environment. The Environmental Assessment is available for review in the docket.

The Environmental Assessment (EA) considered the impacts of the definition, in conjunction with future requirements of an integrity management rule. The EA found that the definition by itself, did not by itself have any impact on the environment. When integrity management program requirements are issued which will incorporate the definition, there should be positive environmental benefits for the areas receiving additional protection. However, because the environmental consequences from a gas release are limited, any impact is expected to be minimal. Therefore, the definition of high consequence areas for gas pipeline integrity management will not have a significant environmental impact.

List of Subjects in 49 CFR Part 192

Pipeline safety, Reporting and recordkeeping requirements.

In consideration of the foregoing, RSPA is amending part 192 of title 49 of the Code of Federal Regulations as follows:

PART 192—[AMENDED]

1. The authority citation for part 192 continues to read as follows:

Authority: 49 U.S.C. 5103, 60102, 60104, 60108, 60109, 60110, 60113, and 60118; and 49 CFR 1.53.

2. Section 192.761 is added under a new undesignated centerheading of ''High Consequence Areas'' in subpart M to read as follows:

Subpart M—Maintenance

* * * * *

HIGH CONSEQUENCE AREAS

§ 192.761 Definitions.

The following definitions apply to this section and § 192.763:

A *high consequence area* means any of the following areas:

(a) An area defined as a Class 3 location under § 192.5;

(b) An area defined as a Class 4 location under § 192.5;

(c) For a pipeline not more than 12 inches in nominal diameter and operating at a maximum allowable operating pressure of not more than 1200 p.s.i.g., an area which extends 300 feet from the centerline of the pipeline to the identified site;

(d) For a pipeline greater than 30 inches in nominal diameter and operating at a maximum allowable operating pressure greater than 1000 p.s.i.g., an area which extends 1000 feet from the centerline of the pipeline to the identified site; and

(e) For a pipeline not described in paragraph (c) or (d) of this section, an area which extends 660 feet from the centerline of the pipeline to the identified site.

(f) An identified site. An identified site is a building or outside area that—

(1) Is visibly marked;

(2) Is licensed or registered by a Federal, State, or local agency;

(3) Is known by public officials; or

(4) Is on a list or map maintained by or available from a Federal, State, or local agency or a publicly or commercially available database; and

(5) Is occupied by persons who are confined, are of impaired mobility, or would be difficult to evacuate. Examples include, but are not limited to hospitals, prisons, schools, day-care facilities, retirement facilities, and assisted-living facilities; or

(6) There is evidence of use of the site by at least 20 or more persons on at least 50 days in any 12-month period. (The days need not be consecutive.) Examples include, but are not limited to, beaches, playgrounds, recreational facilities, camping grounds, outdoor theaters, stadiums, religious facilities, and recreational areas near bodies of water.

Issued in Washington, DC, on August 1, 2002.

Ellen G. Engleman,

Administrator.

[FR Doc. 02–19840 Filed 8–5–02; 8:45 am]

BILLING CODE 4910–60–P

DEPARTMENT OF COMMERCE

National Oceanic and Atomospheric Administration

50 CFR Part 660

[Docket No. 011231309–2090–03; I.D. 072902E]

Fisheries Off West Coast States and in the Western Pacific; Pacific Coast Groundfish Fishery; Removal of the Sablefish Size Limit South of 36° N. Latitude for Limited Entry Fixed Gear and Open Access Fisheries

AGENCY: National Marine Fisheries Service (NMFS), National Oceanic and Atmospheric Administration (NOAA), Commerce.

ACTION: Inseason sablefish size limit adjustment; request for comments.

SUMMARY: NMFS announces removal of the sablefish size limit south of 36° N. latitude (lat.) for limited entry fixed gear and open access Pacific Coast groundfish fisheries. This action, which is authorized by the Pacific Coast Groundfish Fishery Management Plan (FMP), is intended to help the fisheries achieve optimum yield (OY) while protecting overfished and depleted stocks.

DATES: Changes to management measures are effective 0001 hours (local time) August 1, 2002, through the effective dates of the 2003 specifications and management measures for the Pacific Coast groundfish fishery, unless modified, superseded, or rescinded, which will be published in the **Federal Register**. Comments on this action will be accepted through August 21, 2002.

FOR FURTHER INFORMATION CONTACT: Jamie Goen or Carrie Nordeen (Northwest Region, NMFS) 206–526–6140.

SUPPLEMENTARY INFORMATION: The Pacific Coast Groundfish FMP and its implementing regulations at 50 CFR part 660, subpart G, regulate fishing for over 80 species of groundfish off the coasts of Washington, Oregon, and California. Annual groundfish specifications and management measures are initially developed by the Pacific Fishery Management Council (Council), and are implemented by NMFS. The specifications and management measures for the current fishing year (January 1 - December 31, 2002) were initially published in the **Federal Register** as an emergency rule for January 1 - February 28, 2002 (67 FR 1540, January 11, 2002), and as a proposed rule for all of 2002 (67 FR 1555, January 11, 2002), then finalized effective March 1, 2002 (67 FR 10490, March 7, 2002). The final rule was subsequently amended at 67 FR 15338, April 1, 2002; 67 FR 18117, April 15, 2002; 67 FR 30604, May 7, 2002; 67 FR 40870, June 14, 2002; 67 FR 44778, July 5, 2002; and 67 FR 48571, July 25, 2002.

The July inseason trip limit adjustments (67 FR 44778, July 5, 2002) to the groundfish management measures were recommended by the Council in consultation with Pacific Coast Treaty Tribes and the States of Washington, Oregon, and California at its June 18–21, 2002, meeting in Foster City, CA and subsequently corrected by 67 FR 48571, July 25, 2002. The July trip limit adjustments were made to slow the catch of overfished species, particularly darkblotched and bocaccio rockfish. By the end of June the projected bocaccio rockfish catch in the commercial and recreational fisheries combined may have exceeded the rebuilding OY of 100 mt and could approach or exceed the acceptable biological catch of 122 mt. In order to reduce fishing effort on the continental shelf where bocaccio are found and move vessels into deeper waters off the slope, the Council recommended reinstating the minimum 22–inch (56–cm) size requirement for sablefish taken with non-trawl (fixed) gear and a reduced trip limit for sablefish under the 22–inch (56–cm)requirement taken with trawl gear. Adult sablefish tend to be found at greater depths (109 to 547 fathoms), while bocaccio tend to be found at shallower depths (27 to 137 fathoms). Prohibiting retention of small sablefish in the non-trawl fisheries and reducing the trip limit for small sablefish in the limited entry trawl fishery is expected to force vessels into deeper water when targeting sablefish, thereby reducing opportunities for fishermen targeting sablefish to intercept bocaccio. Therefore, in the trawl fishery south of 40° 10' N. lat., the July trip limit changes kept the currently scheduled cumulative sablefish limit of 4,500 lb (2,041 kg) per 2 months, but added a per trip restriction of no more than 500 lb (227 kg) of sablefish smaller than 22 inches (56 cm). To encourage the non-trawl (fixed gear) fisheries to also operate in deeper waters, the July trip limit changes kept the currently scheduled limits, but reinstated the size restriction prohibiting retention of sablefish smaller than 22 inches (56 cm) south of 40°10' N. lat. This restriction was put in place south of the 40°10' N. lat. management line to protect bocaccio, which are most abundant along the California coast. In addition, bocaccio tend to be at the deeper end of

their depth range (i.e., closer to 137 fathoms) along California, making it necessary to push the sablefish fishery into even deeper waters south of 40°10' N. lat.

After receiving inquiries from the fixed gear industry regarding the sablefish size restriction south of 36° N. lat., the Council staff, Groundfish Management Team (GMT), and NMFS decided to re-evaluate the basis of the Council's June decision. The Council decision to reinstate the 22–inch (56–cm) minimum size restriction for sablefish landed by the limited entry fixed gear and open access fleets south of 40°10' N. lat. was intended to protect bocaccio rockfish, a continental shelf overfished species, as small sablefish and bocaccio may co-occur in some areas. Public comment received in July, however, indicated that not only are sablefish smaller at all depths south of 36° N. lat., but that sablefish may not co-occur with bocaccio south of 36° N. lat.

Trawl surveys and stock assessments conducted by NMFS do not extend south of Pt. Conception (34°27' N. lat.) and cannot provide data on whether sablefish are smaller in that area. However, data from two Alaska Fisheries Science Center resource assessment and conservation engineering (RACE) surveys summarizing sablefish average weight by depth and latitude, show a noticeably smaller average weight at all depths south of 36° N. lat. The average weight of sablefish north of 40°10' N. lat. is 0.88 kg at depths less than 150 fathoms, 1.52 kg at depths between 150 to 250 fathoms, and 1.84 kg for depths greater than 250 fathoms. The average weight of sablefish between 40°10' N. lat. and 36° N. lat. is 0.68 kg at depths less than 150 fathoms, 1.19 kg at depths between 150 to 250 fathoms, and 1.95 kg for depths greater than 250 fathoms. The average weight of sablefish south of 36° N. lat. is 0.51 kg at depths less than 150 fathoms, 0.97 kg at depths between 150 to 250 fathoms, and 1.63 kg for depths greater than 250 fathoms. In addition to the RACE surveys, data from pot surveys conducted between 1979 and 1991 also reported smaller sablefish south of Monterey Bay. Because the sablefish south of 36° N. lat. are smaller at all depths, the minimum size restriction south of 36° N. lat. does not necessarily move effort into deeper waters away from bocaccio but does increase discards of sablefish under 22 inches.

Regarding whether bocaccio and sablefish co-occur south of 36° N. lat., according to NMFS' triennial survey data in an area between roughly 37° N. lat. and 34°27' N. lat. (Pt. Conception), 14 percent of the sablefish distribution within the survey area overlaps with the distribution of bocaccio. However, the majority of sablefish in the survey area, 86 percent, tend to be at depths greater than 150 fathoms (i.e., generally beyond bocaccio's depth range). In addition to the triennial survey data, NMFS reviewed landings data supplied by the California Department of Fish and Game (CDFG) for the years 2000 and 2001 from trips targeting sablefish in the Conception Area (south of 36° N. lat.). The highest rate at which bocaccio was reported landed with sablefish over these 2 years was 0.0227 mt of bocaccio with 42 mt of sablefish, or 0.05 percent. The expected catch of bocaccio under the remaining commercial sablefish OY south of 36° N. lat. (142 mt), is between 0.02 mt and 0.08 mt.

Based on the evidence from the RACE surveys, pot surveys, triennial survey, and CDFG landings data, NMFS has determined, in consultation with the GMT, that removing the minimum size restriction of 22 inches for the sablefish fishery south of 36° N. lat. is warranted and will only have a negligible impact on bocaccio rockfish. Because sablefish are larger in deeper waters between 40°10' N. lat. and 36° N. lat., the 22–inch (56–cm) minimum size restriction on sablefish in that area will remain as previously announced for the limited entry fixed gear and open access fleets at 67 FR 44778, July 5, 2002, and subsequently corrected at 67 FR 48571, July 25, 2002. For the limited entry trawl fleet, the minimum size restriction will also remain as previously announced (67 FR 44778, July 5, 2002, as corrected at 67 FR 48571, July 25, 2002).

NMFS Actions

For the reasons stated here, NMFS rescinds the requirement for a 22–inch (56–cm) minimum size restriction for the limited entry fixed gear and open access fleets south of 36° N. lat. as implemented in 67 FR 44778, July 5, 2002, and subsequently corrected at 67 FR 48571, July 25, 2002. NMFS hereby announces the following changes to the 2002 specifications and management measures (67 FR 10490, March 7, 2002, as amended at 67 FR 15338, April 1, 2002; 67 FR 18117, April 15, 2002; 67 FR 30604, May 7, 2002; 67 FR 40870, June 14, 2002; 67 FR 44778, July 5, 2002; and 67 FR 48571, July 25, 2002, to read as follows:

1. In **Federal Register** Document 02–5302 of March 7, 2002, on page 10518, in section IV, under B. Limited Entry Fishery, at the end of paragraph (1), Table 4 is revised to read as follows:

IV. NMFS Actions

B. Limited Entry Fishery

(1) * * *

BILLING CODE 3510–22–S

Table 4. Trip Limits[1/] for Limited Entry Fixed Gear
Other Limits and Requirements Apply -- Read Sections IV. A. and B. NMFS Actions before using this table

line	Species/groups	JAN-FEB	MAR-APR	MAY-JUN	JUL-AUG	SEP-OCT	NOV-DEC
	NOTE FOR FISHING SOUTH OF 40°10': ALL GROUNDFISH FISHING IS **CLOSED OFFSHORE OF THE 20 FATHOM DEPTH CONTOUR, EXCEPT FOR SABLEFISH, THORNYHEADS, AND SLOPE ROCKFISH. SEE FOOTNOTE 8/.						
1	**Minor slope rockfish**						
2	North	1,000 lb/ month		5,000 lb/ 2 months			2,000 lb/ 2 months
3	South						
4	40°10' - 36° N. lat.	25,000 lb/ 2 months		5,000 lb/ 2 months		1,800 lb/ 2 months	
5	South of 36° N. lat.	25,000 lb/ 2 months				15,000 lb/ 2 months	
6	**Splitnose - South**						
7	40°10' - 36° N. lat.	25,000 lb/ 2 months		5,000 lb/ 2 months		1,800 lb/ 2 months	
8	South of 36° N. lat.	25,000 lb/ 2 months				15,000 lb / 2 months	
9	**Pacific ocean perch - North[5/]**	2,000 lb/ month	4,000 lb/ month		4,000 lb/ 2 months		2,000 lb/ month
10	**Sablefish**						
11	North of 36° N. lat.[9/]	300 lb/ day, or 1 landing per week of up to 800 lb, not to exceed 2,400 lb/ 2 months					
12	South of 36° N. lat.	350 lb/ day, or 1 landing per week of up to 1,050 lb		300 lb/ day, or 1 landing per week of up to 900 lb			
13	**Longspine thornyhead**	9,000 lb/ 2 months					
14	**Shortspine thornyhead**	2,000 lb/ 2 months					
15	**Dover sole**	5,000 lb/ month (all flatfish)			5,000 lb/ month (all flatfish)[8/]		
16	**Arrowtooth flounder**						
17	**Petrale sole**						
18	**Rex sole**						
19	**All other flatfish[2/]**						
20	**Whiting[3/]**	20,000 lb/ trip					
21	**Shelf rockfish, including minor shelf rockfish, widow and yellowtail rockfish[5/]**						
22	North	200 lb/ month					
23	South						
24	40°10' - 34°27' N. lat.	200 lb/ month	CLOSED[4/]	Shoreward of 20 ftm depth, 200 lb/ month, otherwise CLOSED[4/]	CLOSED[4/]		
25	South of 34°27' N. lat.	CLOSED[4/]	1,000 lb/ month				
26	**Canary rockfish**	CLOSED[4/]					
27	**Yelloweye rockfish**	CLOSED[4/]					
28	**Cowcod**	CLOSED[4/]					
29	**Bocaccio - South[5/]**						
30	40°10' - 34°27' N. lat.	200 lb/ month	CLOSED[4/]		CLOSED[4/]		
31	South of 34°27' N. lat.	CLOSED[4/]	200 lb/ month				
32	**Chilipepper - South[5/]**						
33	40°10' - 34°27' N. lat.	500 lb/ month	CLOSED[4/]		CLOSED[4/]		
34	South of 34°27' N. lat.	CLOSED[4/]	2,500 lb/ month				
35	**Minor nearshore rockfish**						
36	North	5,000 lb/ month, no more than 2,000 lb of which may be species other than black or blue rockfish[6/]		6,000 lb/ 2 months, no more than 3,000 lb of which may be species other than black or blue rockfish[6/]			
37	South						
38	40°10' - 34°27' N. lat.	1,600 lb/ 2 months	CLOSED[4/]	Shoreward of 20 ftm depth, 1,600 lb/ 2 months, otherwise CLOSED[4/]	1,600 lb/ 2 months[8/]		CLOSED[4/]
39	South of 34°27' N. lat.	CLOSED[4/]	2,000 lb/ 2 months		2,000 lb/ 2 months[8/]		
40	**Lingcod[7/]**						
41	North	CLOSED[4/]		400 lb/ month			CLOSED[4/]
42	South						
43	40°10' - 34°27' N. lat.	CLOSED[4/]		Shoreward of 20 ftm depth, 400 lb/ month, otherwise CLOSED[4/]	400 lb/ month[8/]		CLOSED[4/]
44	South of 34°27' N. lat.			400 lb/ month			

1/ Trip limits apply coastwide unless otherwise specified. "North" means 40°10' N. lat. to the U.S.-Canada border. "South" means 40°10' N. lat. to the U.S.-Mexico border. 40°10' N. lat. is about 20 nm south of Cape Mendocino, CA.

2/ "Other flatfish" means all flatfish at 50 CFR 660.302 except those in this Table 4 with species specific management measures, including trip limits.

3/ The whiting "per trip" limit in the Eureka area inside 100 fm is 10,000 lb/ trip throughout the year. Outside Eureka area, the 20,000 lb/ trip limit applies.

4/ Closed means that it is prohibited to take and retain, possess, or land the designated species in the time or area indicated. See IV.A.(7).

5/ Yellowtail rockfish and widow rockfish coastwide and bocaccio and chilipepper rockfishes in the north are included in the trip limits for shelf rockfish in the appropriate area. POP in the south and splitnose rockfish in the north are included in the trip limits for minor slope rockfish in the appropriate area.

6/ For black rockfish north of Cape Alava (48°09'30" N.lat.), and between Destruction Island (47°40'00" N.lat.) and Leadbetter Point (46°38'10" N.lat.), there is an additional limit of 100 lbs or 30 percent by weight of all fish on board, whichever is greater, per vessel, per fishing trip.

7/ The minimum size limit for lingcod is 24 inches (61 cm) total length.

8/ South of 40°10' N. lat., trip limits apply to inside of 20 fm only. Beginning July 1, 2002, it is prohibited to prosecute groundfish fisheries with non-trawl gear outside 20 fm south of 40°10' N. lat.

9/ The minimum size requirement for sablefish is 22 inches (56 cm) total length between 40°10' N. lat. and 36° N. lat.

To convert pounds to kilograms, divide by 2.20462, the number of pounds in one kilogram.

* * * * *

2. In **Federal Register** Document 02–5302 of March 7, 2002, on page 10520, under C. Trip Limits in the Open Access Fishery, after paragraph (1), Table 5 is revised to read as follows:

C. Trip Limits in the Open Access Fishery

(1) * * *

Table 5. Trip Limits[1/] for Open Access Gears
Other Limits and Requirements Apply -- Read Sections IV. A. and C. NMFS Actions before using this table
Exceptions for exempted gears at Section IV.C.

line	Species/groups	JAN-FEB	MAR-APR	MAY-JUN	JUL-AUG	SEP-OCT	NOV-DEC
	NOTE FOR FISHING SOUTH OF 40°10': ALL GROUNDFISH FISHING IS **CLOSED OFFSHORE OF THE 20 FATHOM DEPTH CONTOUR, EXCEPT SABLEFISH AND SLOPE ROCKFISH. SEE FOOTNOTE 8/. ** NOTE: EFFECTIVE JULY 1, 2002, THERE IS NO RETENTION OF GROUNDFISH WITH EXEMPTED TRAWL GEAR.						
1	**Minor slope rockfish**						
2	North	Per trip, no more than 25% of weight of the sablefish landed					
3	South						
4	40°10' - 36° N. lat.	10,000 lb/ 2 months		5,000 lb/ 2 months		1,800 lb/ 2 months	
5	South of 36° N. lat.	10,000 lb/ 2 months					
6	**Splitnose - South**	200 lb/ month					
7	**Pacific ocean perch - North[4/]**	100 lb/ month					
8	**Sablefish**						
9	North of 36° N. lat.[7/]	300 lb/ day, or 1 landing per week of up to 800 lb, not to exceed 2,400 lb/ 2 months					
10	South of 36° N. lat.	350 lb/ day, or 1 landing per week of up to 1,050 lb		300 lb/ day, or 1 landing per week of up to 900 lb			
11	**Thornyheads**						
12	North of 34° 27' N. lat.	CLOSED[3/]					
13	South of 34° 27' N. lat.	50 lb/ day, no more than 2,000 lb/ 2 months					
14	**Dover sole**	3,000 lb/ month, no more than 300 lb of which may be species other than Pacific sanddabs			3,000 lb/ month, no more than 300 lb of which may be species other than Pacific sandabs[8/]		
15	**Arrowtooth flounder**						
16	**Petrale sole**						
17	**Rex sole**						
18	**All other flatfish[2/]**						
19	**Whiting**	300 lb/ month					
20	**Shelf rockfish, including minor shelf rockfish, widow and yellowtail rockfish[4/]**						
21	North	200 lb/ month					
22	South						
23	40°10' - 34°27' N. lat.	200 lb/ month	CLOSED[3/]	Shoreward of 20 ftm depth, 200 lb/ month, otherwise CLOSED[3/]	CLOSED[3/]		
24	South of 34°27' N. lat.	CLOSED[3/]	500 lb/ month				
25	**Canary rockfish**	CLOSED[3/]					
26	**Yelloweye rockfish**	CLOSED[3/]					
27	**Cowcod**	CLOSED[3/]					
28	**Bocaccio - South[4/]**						
29	40°10' - 34°27' N. lat.	200 lb/ month	CLOSED[3/]		CLOSED[3/]		
30	South of 34°27' N. lat.	CLOSED[3/]	200 lb/ month				
31	**Chilipepper - South[4/]**						
32	40°10' - 34°27' N. lat.	500 lb/ month	CLOSED[3/]		CLOSED[3/]		
33	South of 34°27' N. lat.	CLOSED[3/]	2,500 lb/ month				
34	**Minor nearshore rockfish**						
35	North	3,000 lb/ 2 months, no more than 1,200 lb of which may be species other than black or blue rockfish[5/]		6,000 lb/ 2 months, no more than 3,000 lb of which may be species other than black or blue rockfish[5/]			
36	South						
37	40°10' - 34°27' N. lat.	1,200 lb/ 2 months	CLOSED[3/]	Shoreward of 20 ftm depth, 1,200 lb/ 2 months, otherwise CLOSED[3/]	1,200 lb/ 2 months[8/]		CLOSED[3/]
38	South of 34°27' N. lat.	CLOSED[3/]	1,200 lb/ 2 months				
39	**Lingcod[6/]**						
40	North	CLOSED[3/]		300 lb/ month			CLOSED[3/]
41	South						
42	40°10' - 34°27' N. lat.	CLOSED[3/]		Shoreward of 20 ftm depth, 300 lb/ month, otherwise CLOSED[3/]	300 lb/ month[8/]		CLOSED[3/]
43	South of 34°27' N. lat.			300 lb/ month			

1/ Trip limits apply coastwide unless otherwise specified. "North" means 40°10' N. lat. To the U.S.-Canada border. "South" means 40°10' N. lat. To the U.S.-Mexico border. 40°10' N. lat. is about 20 nm south of Cape Mendocino, CA.

2/ "Other flatfish" means all flatfish at 50 CFR 660.302 except those in this Table 5 with species specific management measures, including trip limits.

3/ Closed means that it is prohibited to take and retain, possess, or land the designated species in the time or area indicated. See IV.A.(7).

4/ Yellowtail rockfish in the south and bocaccio and chilipepper rockfishes in the north are included in the trip limits for minor shelf rockfish in the appropriate area. Pop in the south and splitnose rockfish in the north are included in the trip limits for minor slope rockfish in the appropriate area.

5/ For black rockfish north of Cape Alava (48°09'30" N.lat.), and between Destruction Island (47°40'00" N.lat.) and Leadbetter Point (46°38'10" N.lat.), there is an additional limit of 100 lbs or 30 percent by weight of all fish on board, whichever is greater, per vessel, per fishing trip.

6/ The size limit for lingcod is 24 inches (61 cm) total length.

7/ The minimum size requirement for sablefish is 22 inches (56 cm) total length between 40°10' N. lat. and 36° N. lat.

8/ South of 40°10' N. lat., trip limits apply to inside of 20 fm only. Beginning July 1, 2002, it is prohibited to prosecute groundfish fisheries with non-trawl gear outside 20 fm south of 40°10' N. lat.

To convert pounds to kilograms, divide by 2.20462, the number of pounds in one kilogram.

BILLING CODE 3510–22–C

* * * * *

Classification

These actions are authorized by the Pacific Coast groundfish FMP and its implementing regulations, and are based on the most recent data available. The aggregate data upon which these actions are based are available for public inspection at the Office of the Administrator, Northwest Region, NMFS, (see **ADDRESSES**) during business hours.

The Assistant Administrator for Fisheries, NMFS, finds good cause to waive the requirement to provide prior notice and opportunity for public comment on this action pursuant to 5 U.S.C. 553(b)(B), because providing prior notice and opportunity for comment would be impracticable and contrary to the public interest. It would be impracticable and contrary to the public interest because affording prior notice and opportunity for public comment would impede the agency's function of managing fisheries to achieve OY. By removing the size restriction on sablefish south of 36° N. lat., this inseason action allows fishers to access sablefish allocations without exceeding the OY for that species. Delaying removal of the size restriction in this area could prevent the industry from obtaining the intended benefit and unnecessarily increase discards of adult sablefish under 22 inches. The changes implemented in this action are based in part on comment received on the July 5, 2002 (67 FR 44778) **Federal Register** document implementing the Council's decision. For these reasons, good cause also exists to waive the 30–day delay in effectiveness requirement of 5 U.S.C. 553(d)(3).

Authority: 16 U.S.C. 1801 *et seq.*

Dated: July 31, 2002.

John H. Dunnigan

Director, Office of Sustainable Fisheries, National Marine Fisheries Service.

[FR Doc. 02–19809 Filed 8–1–02; 2:44 pm]

BILLING CODE 3510–22–S

Proposed Rules

Federal Register
Vol. 67, No. 151
Tuesday, August 6, 2002

This section of the FEDERAL REGISTER contains notices to the public of the proposed issuance of rules and regulations. The purpose of these notices is to give interested persons an opportunity to participate in the rule making prior to the adoption of the final rules.

DEPARTMENT OF THE TREASURY

Internal Revenue Service

26 CFR Part 1

[REG–103823–99]

RIN 1545–AX12

Guidance on Cost Recovery Under the Income Forecast Method; Correction

AGENCY: Internal Revenue Service (IRS), Treasury.

ACTION: Correction to notice of proposed rulemaking and notice of public hearing.

SUMMARY: This document contains a correction to a notice of proposed rulemaking that was published in the **Federal Register** on Friday, May 31, 2002 (67 FR 38025), relating to deductions available to taxpayers using the income forecast method of depreciation.

FOR FURTHER INFORMATION CONTACT: Bernard P. Harvey (202) 622–3110 (not a toll-free number).

SUPPLEMENTARY INFORMATION:

Background

The notice of proposed rulemaking (REG–103823–99) that is the subject of this correction is under section 167 of the Internal Revenue Code.

Need for Correction

As published the notice of proposed rulemaking (REG–103823–99), contains an error that my prove to be misleading and is in need of clarification.

Correction of Publication

Accordingly, the publication of the notice of proposed rulemaking and notice of public hearing (REG–103823–99), which was the subject of FR Doc. 02–13578, is corrected as follows:

§ 1.167(n)–6 [Corrected]

On page 38035, column 1, § 1.167(n)–6(c)(2)(ii), line 5, the language ''income) in any taxable year prior'' is corrected to read ''income) in any prior taxable year''.

LaNita VanDyke,
Acting Chief, Regulations Unit, Associate Chief Counsel, (Income Tax & Accounting).

[FR Doc. 02–19834 Filed 8–5–02; 8:45 am]

BILLING CODE 4830–01–P

DEPARTMENT OF THE TREASURY

Internal Revenue Service

26 CFR Parts 1 and 301

[REG–105316–98 and REG–161424–01]

RIN 1545–AW67 and 1545–BA43

Information Reporting for Qualified Tuition and Related Expenses; Magnetic Media Filing Requirements for Information Returns; Cancellation

AGENCY: Internal Revenue Service (IRS), Treasury.

ACTION: Cancellation of notice of public hearing on proposed rulemaking.

SUMMARY: This document provides notice of cancellation of a public hearing on proposed regulations under section 6050S of the Internal Revenue Code.

DATES: The public hearing originally scheduled for August 13, 2002, at 10 a.m., is cancelled.

FOR FURTHER INFORMATION CONTACT: Treena Garrett of the Regulations Unit, Associate Chief Counsel (Income Tax and Accounting), (202) 622–7180 (not a toll-free number).

SUPPLEMENTARY INFORMATION: A notice of proposed rulemaking and notice of public hearing that appeared in the **Federal Register** on April 29, 2002, (67 FR 20923), announced that a public hearing was scheduled for August 13, 2002, at 10 a.m., Internal Revenue Service Building, 1111 Constitution Avenue, NW, Washington, DC. The subject of the public hearing is proposed regulations under section 6050S of the Internal Revenue Code. The public comment period for these proposed regulations expired on July 29, 2002.

The notice of proposed rulemaking and notice of public hearing, instructed those interested in testifying at the public hearing to submit a request to speak and an outline of the topics to be addressed. As of August 1, 2002, no one has requested to speak. Therefore, the public hearing scheduled for August 13, 2002, is cancelled.

LaNita Van Dyke,
Acting Chief, Regulations Unit, Associate Chief Counsel, (Income Tax and Accounting).

[FR Doc. 02–19833 Filed 8–5–02; 8:45 am]

BILLING CODE 4830–01–P

DEPARTMENT OF TRANSPORTATION

Coast Guard

33 CFR Chapter I

[USCG–2002–12835]

Review of Boating Safety Regulations

AGENCY: Coast Guard, DOT.

ACTION: Request for comments.

SUMMARY: The Coast Guard is conducting a comprehensive review of current boating safety regulations in three stages. These stages correspond with sequential meetings of the National Boating Safety Advisory Council (NBSAC). This document requests comments for the third stage, involving requirements for operators of recreational vessels. We will provide NBSAC members with a summary and copy of the comments before the April 2003 meeting and will consider all relevant public comments and NBSAC recommendations in determining which regulations, if any, should be changed.

DATES: Comments and related material for the third stage of the review must reach the Docket Management Facility on or before November 4, 2002.

ADDRESSES: To make sure that your comments and related material are not entered more than once in the docket, please submit them by only one of the following means:

(1) By mail to the Docket Management Facility, (USCG–2002–12835), U.S. Department of Transportation, room PL–401, 400 Seventh Street SW, Washington, DC 20590–0001. (2) By delivery to room PL–401 on the Plaza level of the Nassif Building, 400 Seventh Street SW, Washington, DC, between 9 a.m. and 5 p.m., Monday through Friday, except Federal holidays. The telephone number is 202–366–9329. (3) By fax to the Docket Management Facility at 202–493–2251. (4) Electronically through the Web Site for the Docket Management System at *http://dms.dot.gov.*

The Docket Management Facility maintains the public docket for this notice. Comments and material received from the public, as well as documents mentioned in this preamble as being available in the docket, will become part of this docket and will be available for inspection or copying at room PL–401 on the Plaza level of the Nassif Building, 400 Seventh Street SW, Washington, DC, between 9 a.m. and 5 p.m., Monday through Friday, except Federal holidays. You may also find this docket on the Internet at *http://dms.dot.gov.* You may obtain a copy of this notice by calling the U.S. Coast Guard Infoline at 1–800–368–5647, or read it on the Internet, at the Web Site for the Office of Boating Safety, at *http://www.uscgboating.org* or at *http://dms.dot.gov.*

FOR FURTHER INFORMATION CONTACT: If you have questions on this notice, contact Carlton Perry, Project Manager, Office of Boating Safety, U.S. Coast Guard, by telephone at 202–267–0979 or by e-mail at *cperry@comdt.uscg.mil.* If you have questions on viewing or submitting material to the docket, call Dorothy Beard, Chief, Dockets, Department of Transportation, telephone 202–366–5149.

SUPPLEMENTARY INFORMATION:

Background and Purpose

NBSAC is a Federal advisory committee created under 46 U.S.C. 13110(a) and operated under 5 U.S.C. App. 2 and a charter from the Secretary of Transportation (*see* 66 FR 7951; January 26, 2001). It advises the Coast Guard on substantive matters of boating safety. Its 21 members come from 3 segments of the boating community: the boating industry; State officials on boating safety; and representatives of national recreational boating organizations and the general public. NBSAC meets twice a year, in the spring and fall. The meetings are open to the public. Under 46 U.S.C. 4302 (c)(4), the Coast Guard must consult NBSAC in the formulation of boating safety regulations.

Past Comprehensive Reviews

In 1981, 1986, 1992, and 1997, we conducted comprehensive reviews of our boating safety regulations in conjunction with a single NBSAC meeting. We asked NBSAC to determine whether the regulations were still necessary, beneficial, cost-effective, and consistent with current technology. These periodic reviews led NBSAC to make numerous recommendations to improve and update specific provisions in the regulations.

Current Comprehensive Review

We are conducting this review in three stages at sequential NBSAC meetings. This is the notice for the third stage of the review that will be discussed at NBSAC's April 2003 meeting. We published a document announcing the first stage of the review in the **Federal Register** on August 30, 2001 [66 FR 45791], and NBSAC reviewed those regulations at its April 2002 meeting. We published a notice announcing the second stage of the review in the **Federal Register** on March 26, 2002 [67 FR 13817], stating that NBSAC would review regulations of the second stage in October 2002. Each stage will evaluate current boating safety regulations, but will not include any rules under development.

The *first review stage* included administrative requirements for manufacturers and importers of recreational vessels (33 CFR part 179 and part 181, subparts B and C) and fire and explosion prevention requirements for manufacturers and importers of recreational vessels (33 CFR part 183, subparts I, J, and K). NBSAC reviewed these regulations and related comments at its April 2002 meeting.

The *second review stage* included requirements for manufacturers and importers of recreational vessels to prevent drownings (33 CFR part 183, subparts B, C, D, F, G, H, and L). NBSAC will review these regulations and related comments at its October 2002 meeting.

The *third review stage* includes requirements for operators of recreational vessels (33 CFR parts 95, 100, 173, 174, 175, 177, 181 (subparts A and G), 187 and 46 CFR part 25 (subpart 25.30), and part 58 (subparts 58.03 and 58.10)). NBSAC will review these regulations and related comments at its April 2003 meeting. We will publish a notice in the **Federal Register** announcing the date and time of that public meeting, prior to that meeting.

You may find copies of the boating safety regulations at any public library that carries the United States Code of Federal Regulations. You may buy them from the Superintendent, Government Printing Office, telephone: 202–512–2250; facsimile: 202–512–1800. You may also access them on the Internet at URL address *http://www.gpo.gov/nara/cfr.*

Request for Comments

We encourage interested persons from all sectors of the boating community to participate in this third regulatory review stage by submitting comments and related material regarding any changes to the current boating safety regulations, including elimination or revocation of any requirements. If you submit comments, please include your name and address, identify the docket number for this notice (USCG–2002–12835) and give the reasons for each comment. You may submit your comments and material by mail, hand delivery, fax, or electronic means to the Docket Management Facility at the address under **ADDRESSES**; but please submit your comments and material by only one means. If you submit them by mail or hand delivery, submit them in an unbound format, no larger than 8½ by 11 inches, suitable for copying and electronic filing. If you submit them by mail and would like to know they reached the Facility, please enclose a stamped, self-addressed postcard or envelope. We will consider all comments and material received during the comment period.

We are especially interested in responses to the following questions:

- *Need*—Is there still a need for the regulation? Is the problem that the regulation was originally intended to solve still a problem?
- *Technical Accuracy*—Has the regulation kept pace with the technological, economic, environmental, or other relevant conditions? Would any particular changes make it more effective in achieving its intended goal?
- *Cost/Benefit*—What are the costs, or other burdens or adverse effects, including impacts on use of energy, of the regulation? What are the benefits of the regulation in terms of personal safety or other values? Do the benefits outweigh the costs?
- *Problems*—Are there any problems or complaints in understanding or complying with the regulation?
- *Alternative*—Are there any nonregulatory ways to achieve the goal of the regulation at a lower cost, lower burden, or adverse effect?

We will summarize all comments received in response to this request during the comment period and will provide a copy of the summary and individual comments to the NBSAC members for their consideration before the April 2003 meeting. We will consider all relevant comments in the formulation of any changes to the boating safety regulations that may result from this review stage.

Dated: July 26, 2002.

James C. Olson,

Rear Admiral, U.S. Coast Guard, Director of Operations Policy.

[FR Doc. 02–19674 Filed 8–5–02; 8:45 am]

BILLING CODE 4910–15–P

DEPARTMENT OF TRANSPORTATION

Coast Guard

33 CFR Part 117

[CGD07–02–091]

RIN 2115–AE47

Drawbridge Operation Regulations; Miami River, Miami-Dade County, FL

AGENCY: Coast Guard, DOT.

ACTION: Notice of proposed rulemaking.

SUMMARY: The Coast Guard proposes to change the operating regulations of all drawbridges on the Miami River from the mouth of the river to and including the N.W. 27th Avenue bridge, mile 3.7, Miami, Florida, by allowing tugs and tugs with tows to pass through these bridges, except the new Second Avenue bridge, upon proper signal to the bridge tender even during the normal rush hour traffic periods. This proposed rule would also allow the new Second Avenue bridge to only open a single-leaf of the bridge during certain times of the day for approximately seven months. This action is intended to facilitate commercial vessel traffic along the Miami River and facilitate construction of the new Second Avenue bridge.

DATES: Comments and related material must reach the Coast Guard on or before September 5, 2002.

ADDRESSES: You may mail comments and related material to Commander (obr), Seventh Coast Guard District, 909 S.E. 1st Avenue, Room 432, Miami, FL 33131.

Comments and material received from the public, as well as documents indicated in this preamble as being available in the docket, are part of docket [CGD07–02–091] and are available for inspection or copying at Commander (obr), Seventh Coast Guard District, 909 S.E. 1st Avenue, Miami, FL 33131 between 8 a.m. and 4:30 p.m., Monday through Friday, except Federal holidays.

FOR FURTHER INFORMATION CONTACT: Mr. Barry Dragon, Bridge Branch, 909 SE 1st Ave, Miami, FL 33131, telephone number 305–415–6743.

SUPPLEMENTARY INFORMATION:

Request for Comments

We encourage you to participate in this rulemaking by submitting comments and related material. If you do so, please include your name and address, identify the docket number for this rulemaking [CGD07–02–091], indicate the specific section of this document to which each comment applies, and give the reason for each comment. Please submit all comments and related material in an unbound format, no larger than 8½ by 11 inches, suitable for copying. If you would like to know they reached us, please enclose a stamped, self-addressed postcard or envelope. We will consider all comments and material received during the comment period. We may change this proposed rule in view of them.

We believe a 30-day comment period for this rulemaking is sufficient based on the pre-rulemaking meetings that have taken place between the bridge owner, Florida Department of Transportation (FDOT), their contractor, Gilbert Southern, and both marine and land-based stakeholders that may be impacted by this rule who have been working together to develop an acceptable schedule. Additionally, this 30-day comment period will allow us to publish a final rule in the **Federal Register** before construction begins.

Public Meeting

We do not now plan to hold a public meeting. But you may submit a request for a meeting by writing to Bridge Branch, Seventh Coast Guard District, 909 SE 1st Ave, Room 432, Miami, FL 33131, explaining why one would be beneficial. If we determine that one would aid this rulemaking, we will hold one at a time and place announced by a later notice in the **Federal Register**.

Background and Purpose

On July 8, 2002, we received a request from Gilbert Southern, the bridge contractor, requesting permission to keep a single-leaf of the new Second Avenue bridge in the closed position for periods of time during the day to allow them to construct the spans. Gilbert Southern informed the Coast Guard that construction in the upright position was not feasible due to the length of each span. Construction is scheduled to begin in October, 2002, and will require single-span closures during certain periods of time until April, 2003. Gilbert Southern estimates that the horizontal clearance of the bridge with a single-span of the bridge in the closed position will be 70 feet. This proposed rule would allow the Second Avenue bridge to keep a single-span of the bridge in the closed position from 4 a.m. until 10 p.m. from October 15, 2002, until April 30, 2003. One span of the bridge will always open on signal and both spans of the bridge will be open from 10 p.m. until 4 a.m. During the initial construction from October through approximately December only one span of the bridge will exist. Once the first span is complete, it will be placed in the open position while construction on the second leaf is completed.

Gilbert Southern held meetings during June, 2001 and July, 2002, with the Florida Department of Transportation (FDOT) project supervisor and industry representatives to attempt to reach an acceptable schedule for single leaf operations. The contractor has stated that they will attempt to accommodate commercial navigation that cannot clear the approximately 70 feet of horizontal clearance provided by a single-span opening by only working 6 days of the week and they will attempt to adjust their daily construction schedule to allow both spans to remain open during at least one high and low tidal period. Moreover, the contractor only anticipates single-span closures between 8 and 14 hours a day.

This proposed rule would also alleviate some of the burden on commercial vessels requiring a full double-leaf opening and certain tidal conditions to navigate the Miami River by allowing tugs and tugs with tows to pass through the other bridges on the Miami River during the morning and evening rush hour bridge closures from 7:30 a.m. to 9 a.m. and from 4:30 p.m. to 6 p.m., Monday through Friday, except Federal holidays. This proposed rule would allow tugs and tugs with tows to navigate the river during favorable tidal and construction conditions by excepting them from the current vehicle rush hour times where the bridges remain closed. Each bridge on the Miami River from the mouth of the River to N.W. 27th Avenue, excluding the new Second Avenue, need open only for public vessels of the United States, tugs and tugs with tows, and vessels in an emergency involving danger to life or property, from 7:30 a.m. to 9 a.m. and from 4:30 p.m. to 6 p.m., Monday through Friday, except Federal holidays.

Discussion of Proposed Rule

The Coast Guard proposes to allow the new Second Avenue bridge to keep a single-span of the bridge in the down position from 4 a.m. until 10 p.m. daily from October15, 2002 until April 30, 2003. At all times, one span of the bridge will be open and both spans of the bridge will be open from 10 p.m. until 4 a.m. from October 15, 2002 until April 30, 2003.

Additionally, in order to meet the reasonable needs of commercial navigation while not unreasonably impacting vehicular traffic during the construction of the new Second Avenue bridge, the Coast Guard proposes to allow tugs and tugs with tows to pass

through the Miami River bridges from the mouth of the Miami River to N.W. 27th Avenue, excluding the new Second Avenue bridge, upon proper signal to the bridge tender, even during the normal rush hour closures from 7:30 a.m. to 9 a.m. and from 4:30 p.m. to 6 p.m., Monday through Friday, except Federal holidays. These bridges need not open for all other vessels, except public vessels of the United States and vessels in an emergency involving danger to life or property, from 7:30 a.m. to 9 a.m. and from 4:30 p.m. to 6 p.m., Monday through Friday, except Federal holidays.

Regulatory Evaluation

This proposed rule is not a ''significant regulatory action'' under section 3(f) of Executive Order 12866, Regulatory Planning and Review, and does not require an assessment of potential costs and benefits under section 6(a)(3) of that Order. The Office of Management and Budget has not reviewed it under that Order. It is not significant under the regulatory policies and procedures of the Department of Transportation (DOT) (44 FR 11040, February 26, 1979) because this proposed rule only makes a slight exception the existing bridge operation schedules during heavy vehicle traffic hours for tugs and tugs with tows and still provides for regular openings. Moreover, a single-leaf of the new Second Avenue bridge will remain open 24 hours a day and single-leaf closures will only impede a small segment of the vessel traffic on the Miami River and the contractor intends to work with the commercial vessels to try to have both spans of the bridge open during at least one high and low tide.

Small Entities

Under the Regulatory Flexibility Act (5 U.S.C. 601–612), we considered whether this proposed rule would have a significant economic impact on a substantial number of small entities. The term ''small entities'' comprises small businesses, not-for-profit organizations that are independently owned and operated and are not dominant in their fields, and governmental jurisdictions with populations of less than 50,000.

This proposed rule may affect the following entities, some of which might be small entities: the owners or operators of vessels and vehicles intending to transit under and over the bridges on the Miami River during the hours of 7:30 a.m. to 9 a.m. and 4:30 p.m. to 6 p.m. as well as some waterfront facility owners on the Miami River. The Coast Guard certifies under 5 U.S.C. 605(b) that this proposed rule would not have a significant economic impact on a substantial number of small entities because this proposed rule only makes a slight exception to the existing bridge operation schedules during heavy vehicle traffic hours for tugs and tugs with tows and still provides for regular openings. Moreover, a single-leaf of the new Second Avenue bridge will remain open 24 hours a day and single-leaf closures will only impede a small segment of the vessel traffic on the Miami River and the contractor intends to work with the commercial vessels to try to have both spans of the bridge open during at least one high and low tide.

If you think that your business, organization, or governmental jurisdiction qualifies as a small entity and that this proposed rule would have a significant economic impact on it, please submit a comment (*see* **ADDRESSES**) explaining why you think it qualifies and how and to what degree this rule would economically affect it.

Assistance for Small Entities

Under section 213(a) of the Small Business Regulatory Enforcement Fairness Act of 1996 (Public Law 104–121), we want to assist small entities in understanding this proposed rule so that they can better evaluate its effects on them and participate in the rulemaking. If the rule would affect your small business, organization, or governmental jurisdiction and you have questions concerning its provisions or options for compliance, please contact the person listed under **FOR FURTHER INFORMATION CONTACT**.

Small businesses may send comments on the actions of Federal employees who enforce, or otherwise determine compliance with, Federal regulations to the Small Business and Agriculture Regulatory Enforcement Ombudsman and the Regional Small Business Regulatory Fairness Boards. The Ombudsman evaluates these actions annually and rates each agency's responsiveness to small business. If you wish to comment on actions by employees of the Coast Guard, call 1–888–REG–FAIR (1–888–734–3247).

Collection of Information

This proposed rule would call for no new collection of information under the Paperwork Reduction Act of 1995 (44 U.S.C. 3501–3520).

Federalism

A rule has implications for federalism under Executive Order 13132, Federalism, if it has a substantial direct effect on State or local governments and would either preempt State law or impose a substantial direct cost of compliance on them. We have analyzed this proposed rule under that Order and have determined that it does not have implications for federalism.

Unfunded Mandates Reform Act

The Unfunded Mandates Reform Act of 1995 (2 U.S.C. 1531–1538) requires Federal agencies to assess the effects of their discretionary regulatory actions. In particular, the Act addresses actions that my result in the expenditure by a State, local, or tribal government, in the aggregate, or by the private sector of $100,000,000 or more in any one year. Although this proposed rule will not result in such an expenditure, we do discuss the effects of this rule elsewhere in this preamble.

Taking of Private Property

This proposed rule would not effect a taking of private property or otherwise have taking implications under Executive Order 12630, Governmental Actions and Interference with Constitutionally Protected Property Rights.

Civil Justice Reform

This proposed rule meets applicable standards in sections 3(a) and 3(b)(2) of Executive Order 12988, Civil Justice Reform, to minimize litigation, eliminate ambiguity, and reduce burden.

Protection of Children

We have analyzed this proposed rule under Executive Order 13045, Protection of Children from Environmental Health Risks and Safety Risks. This proposed rule is not an economically significant rule and does not create an environmental risk to health or risk to safety that may disproportionately affect children.

Environment

We considered the environmental impact of this proposed rule and concluded that, under figure 2–1, paragraph (32)(e) of Commandant Instruction M16475.lD, this proposed rule is categorically excluded from further environmental documentation.

Indian Tribal Governments

This proposed rule does not have tribal implications under Executive Order 13175, Consultation and Coordination with Indian Tribal Governments, because it does not have a substantial direct effect on one or more Indian tribes, on the relationship between the Federal Government and Indian tribes, or on the distribution of

power and responsibilities between the Federal Government and Indian tribes.

To help the Coast Guard establish regular and meaningful consultation and collaboration with Indian and Alaskan Native tribes, we published a notice in the **Federal Register** (66 FR 3361, July 11, 2001) requesting comments on how to best carry out the Order. We invite your comments on how this proposed rule might impact tribal governments, even if that impact may not constitute a ''tribal implication'' under the Order.

Energy Effects

We have analyzed this proposed rule under Executive Order 13211, Actions Concerning Regulations That Significantly Affect Energy Supply, Distribution, or Use. We have determined that it is not a ''significant energy action'' under that order because it is not a ''significant regulatory action'' under Executive Order 12866 and is not likely to have a significant adverse effect on the supply, distribution, or use of energy. It has not been designated by the Administrator of the Office of Information and Regulatory Affairs as a significant energy action. Therefore, it does not require a Statement of Energy Effects under Executive Order 13211.

List of Subjects in 33 CFR Part 117

Bridges.

For the reasons discussed in the preamble, the Coast Guard proposes to amend 33 CFR part 117 as follows:

PART 117—DRAWBRIDGE OPERATION REGULATIONS

1. The authority citation for part 117 continues to read as follows:

Authority: 33 U.S.C. 499; 49 CFR 1.46; 33 CFR 1.05–1(g); section 117.255 also issued under the authority of Pub. L. 102–587, 106 Stat. 5039.

§ 117.305 [Suspended]

2. From October 15, 2002 until April 30, 2003, temporarily suspend § 117.305.

3. From October 15, 2002, until April 30, 2003, add a new § 117.T306 to read as follows:

§ 117.T306 Miami River, Florida.

(a) The draws of each bridge from the mouth of the Miami River to and including N.W. 27th Avenue bridge, mile 3.7 at Miami, but excluding the new Second Avenue bridge, mile 0.5, Miami, Florida, shall open on signal; except that, from 7:30 a.m. to 9 a.m. and 4:30 p.m. to 6 p.m., Monday through Friday except Federal holidays, the draws need not open for the passage of vessels. Public vessels of the United States, tugs and tugs with tows, and vessels in an emergency involving danger to life or property shall be passed at any time.

(b) The new Second Avenue bridge, mile 0.5, Miami, Florida, need open only a single-leaf of the bridge from 4 a.m. until 10 p.m. daily; and the bridge will remain in the fully open to navigation position from 10:01 p.m. to 3:59 a.m. daily.

Dated: July 29, 2002.

John E. Crowley, Jr.,

Captain, U.S. Coast Guard, Acting, Commander, Seventh Coast Guard District.

[FR Doc. 02–19847 Filed 8–5–02; 8:45 am]

BILLING CODE 4910–15–P

DEPARTMENT OF TRANSPORTATION

Coast Guard

33 CFR Part 117

[CGD05–02–020]

RIN 2115–AE47

Drawbridge Operation Regulations; Nanticoke River, Seaford, DE

AGENCY: Coast Guard, DOT.

ACTION: Notice of proposed rulemaking.

SUMMARY: The Coast Guard proposes to change the regulations that govern the operation of the Norfolk Southern Railway Bridge across the Nanticoke River, mile 39.4, in Seaford, Delaware. The proposed rule would allow for increased bridge openings by extending the daytime hours of operation and reducing the required advance notice time for opening the draw. This proposed rule change would reduce delays for navigation by allowing more draw openings.

DATES: Comments and related material must reach the Coast Guard on or before September 5, 2002.

ADDRESSES: You may mail comments and related material to Commander (Aowb), Fifth Coast Guard District, Federal Building, 4th Floor, 431 Crawford Street, Portsmouth, Virginia 23704–5004. The Commander (Aowb), Fifth Coast Guard District maintains the public docket for this rulemaking. Comments and material received from the public, as well as documents indicated in this preamble as being available in the docket, will become part of this docket and will be available for inspection or copying at the above address between 8 a.m. and 4 p.m., Monday through Friday, except Federal holidays.

FOR FURTHER INFORMATION CONTACT: Ann B. Deaton, Bridge Administrator, Fifth Coast Guard District, at (757) 398–6222.

SUPPLEMENTARY INFORMATION:

Request for Comments

We encourage you to participate in this rulemaking by submitting comments and related material. If you do so, please include your name and address, identify the docket number for this rulemaking (CGD05–02–020), indicate the specific section of this document to which each comment applies, and give the reason for each comment. Please submit all comments and related material in an unbound format, no larger than 8½ by 11 inches, suitable for copying. If you would like to know they reached us, please enclose a stamped, self-addressed postcard or envelope. We will consider all comments and material received during the comment period. We may change this proposed rule in view of them.

Public Meeting

We do not now plan to hold a public meeting. But you may submit a request for a meeting by writing to the Commander, Fifth Coast Guard District at the address under **ADDRESSES** explaining why one would be beneficial. If we determine that one would aid this rulemaking, we will hold one at a time and place announced by a later notice in the **Federal Register**.

Background and Purpose

The Nanticoke River Bridge is owned and operated by Norfolk Southern Railway. The regulation in 33 CFR 117.243 requires the railroad bridge over the Nanticoke River, mile 39.4, in Seaford, Delaware to open on signal from May 1 through September 30 from 8 a.m. to 8 p.m. but need not be opened from 8 p.m. to 8 a.m. At all times from October 1 through April 30, the draw shall open on signal if at least four hours notice is given.

The bridge connects The Towns of Blades and Seaford. This bridge is part of one of two railways supplying the southern Delmarva Peninsula. Mariners do not have an alternate route. The Town of Blades has requested permission to increase the number of hours the bridge will be open to marine traffic due to the increased navigation on the waterway. The Town of Blades asserts that the present regulation for this bridge is too restrictive for the increased number of mariners. Blades Economic Development Commission (BEDCO) is just completing an 87-slip marina in the Town of Blades, upstream from the bridge. Once the marina is complete, the drawbridge will need to

be opened more frequently to accommodate the increased flow of maritime traffic in this area. As the flow of vessel traffic increases, the current operating schedule of the bridge may cause vessel back-ups and potential hazardous impacts on navigation.

The Town of Blades requested permission to increase the number of hours the bridge will be open for boats to avoid excessive/hazardous vessel back-ups at the bridge. Norfolk Southern Railway and local mariners developed an inter-modal compromise. The plan allows for an extended amount of time that the draw could be open, while not excessively limiting the rail traffic. This compromise will help to decrease the back-up of mariners at the bridge and thus avoid potentially hazardous/dangerous situations. The Coast Guard believes that this proposed rule change is needed and would not overburden marine traffic.

Due to the fact that the proposed rule will increase the number of hours the bridge will open, and the bridge owner has agreed to these changes, we anticipate only positive impacts on the boating community. Therefore, the time for public comment is shortened.

Discussion of Proposed Rule

This proposed rule will govern the opening schedule of the Norfolk Southern drawbridge on the Nanticoke River, Seaford, Delaware. The proposed rule will allow the draw to open more frequently, extend the summer season and the hours of operation. In the proposed rule, the draw will open on signal from 5 a.m. through 11 p.m. from March 15 through November 15. During the night (11 p.m. to 5 a.m.) from March 15 to November 15, the draw will open after 2½ hours notice is given. At all times during the remainder of the year, the draw will open after 2½ hours notice is given.

Regulatory Evaluation

This proposed rule is not a ''significant regulatory action'' under section 3(f) of Executive Order 12866, Regulatory Planning and Review, and does not require an assessment of potential costs and benefits under section 6(a)(3) of that Order. The Office of Management and Budget has not reviewed it under that Order. It is not ''significant'' under the regulatory policies and procedures of the Department of Transportation (DOT)(44 FR 11040, February 26, 1979).

We expect the economic impact of this proposed rule to be so minimal that a full Regulatory Evaluation under paragraph 10e of the regulatory policies and procedures of DOT is unnecessary.

We reached this conclusion based on the fact that this proposed rule change will not overburden marine traffic but actually improve the quality of navigation on the Nanticoke River.

Small Entities

Under the Regulatory Flexibility Act (5 U.S.C. 601–612), we have considered whether this proposed rule would have a significant economic impact on a substantial number of small entities. The term ''small entities'' comprises small businesses, not-for-profit organizations that are independently owned and operated and are not dominant in their fields, and governmental jurisdictions with populations of less than 50,000.

The Coast Guard certifies under 5 U.S.C. 605(b) that this proposed rule would not have a significant economic impact on a substantial number of small entities.

This proposed rule would not have a significant economic impact on a substantial number of small entities because the regulation removes current restrictions on navigation by allowing for an increased number of draw openings. In addition, maritime advisories will be widely available to users of the river about all proposed regulations and any potential impacts to navigation.

If you think that your business, organization, or governmental jurisdiction qualifies as a small entity and that this rule would have a significant economic impact on it, please submit a comment (see **ADDRESSES**) explaining why you think it qualifies and how and to what degree this rule would economically affect it.

Assistance for Small Entities

Under section 213(a) of the Small Business Regulatory Enforcement Fairness Act of 1996 (Public Law 104–121), we want to assist small entities in understanding this proposed rule so that they can better evaluate its effects on them and participate in the rulemaking. If the rule would affect your small business, organization, or governmental jurisdiction and you have questions concerning its provisions or options for compliance, please contact Ann B. Deaton, Bridge Administrator, Fifth Coast Guard District, (757) 398–6222.

Collection of Information

This proposed rule would call for no new collection of information under the Paperwork Reduction Act of 1995 (44 U.S.C. 3501–3520.).

Federalism

A rule has implications for federalism under Executive Order 13132, Federalism, if it has a substantial direct effect on State or local governments and would either preempt State law or impose a substantial direct cost of compliance on them. We have analyzed this proposed rule under that Order and have determined that it does not have implications for federalism.

Unfunded Mandates Reform Act

The Unfunded Mandates Reform Act of 1995 (2 U.S.C. 1531–1538) requires Federal agencies to assess the effects of their discretionary regulatory actions. In particular, the Act addresses actions that may result in the expenditure by a State, local, or tribal government, in the aggregate, or by the private sector of $100,000,000 or more in any one year. Though this proposed rule would not result in such an expenditure, we do discuss the effects of this rule elsewhere in this preamble.

Taking of Private Property

This proposed rule would not affect a taking of private property or otherwise have taking implications under Executive Order 12630, Governmental Actions and Interference with Constitutionally Protected Property Rights.

Civil Justice Reform

This proposed rule meets applicable standards in sections 3(a) and 3(b)(2) of Executive Order 12988, Civil Justice Reform, to minimize litigation, eliminate ambiguity, and reduce burden.

Protection of Children

We have analyzed this proposed rule under Executive Order 13045, Protection of Children from Environmental Health Risks and Safety Risks. This rule is not an economically significant rule and would not create an environmental risk to health or risk to safety that might disproportionately affect children.

Indian Tribal Governments

This proposed rule does not have tribal implications under Executive Order 13175, Consultation and Coordination with Indian Tribal Governments, because it would not have a substantial direct effect on one or more Indian tribes, on the relationship between the Federal Government and Indian tribes, or on the distribution of power and responsibilities between the Federal Government and Indian tribes.

To help the Coast Guard establish regular and meaningful consultation

and collaboration with Indian and Alaskan Native tribes, we published a notice in the **Federal Register** (66 FR 36361, July 11, 2001) requesting comments on how to best carry out the Order. We invite your comments on how this proposed rule might impact tribal governments, even if that impact may not constitute a ''tribal implication'' under the Order.

Energy Effects

We have analyzed this proposed rule under Executive Order 13211, Actions Concerning Regulations That Significantly Affect Energy Supply, Distribution, or Use. We have determined that it is not a ''significant energy action'' under that order because it is not a ''significant regulatory action'' under Executive Order 12866 and is not likely to have a significant adverse effect on the supply, distribution, or use of energy. It has not been designated by the Administrator of the Office of Information and Regulatory Affairs as a significant energy action. Therefore, it does not require a Statement of Energy Effects under Executive Order 13211.

Environment

We have considered the environmental impact of this proposed rule and concluded that, under figure 2–1, paragraph (32)(e), of Commandant Instruction M16475.lD, this rule is categorically excluded from further environmental documentation. The proposed rule only involves the operation of an existing drawbridge and will not have any impact on the environment.

List of Subjects 33 CFR Part 117

Bridges.

For reasons discussed in the preamble, the Coast Guard proposes to amend 33 CFR part 117 as follows:

PART 117—DRAWBRIDGE OPERATION REGULATIONS

1. The authority citation for part 117 continues to read as follows:

Authority: 33 U.S.C. 499; 49 CFR 1.46; 33 CFR 1.05–1(g); section 117.255 also issued under authority of Pub. L. 102–587, 106 Stat. 5039.

2. Section 117.243 is revised to read as follows:

§ 117.243 Nanticoke River.

(a) The draw of the Norfolk Southern Railway bridge across the Nanticoke River, at mile 39.4, at Seaford, Delaware will operate as follows:

(1) From March 15 through November 15 the draw shall open on signal for all vessels except that, from 11 p.m. to 5 a.m. at least 2½ hours notice shall be required.

(2) At all times from November 16 through March 14 the draw will open on signal if at least 2½ hours notice is given.

(b) When notice is required, the owner operator of the vessel must provide the bridge tender with an estimated time of passage by calling 717–541–2151/2140.

Dated: July 25, 2002.

Arthur E. Brooks,

Captain, U.S. Coast Guard Acting Commander, Fifth Coast Guard District.

[FR Doc. 02–19846 Filed 8–5–02; 8:45 am]

BILLING CODE 4910–15–P

DEPARTMENT OF TRANSPORTATION

Coast Guard

33 CFR Part 165

[CGD01–00–007]

RIN 2115–AA97

Regulated Navigation Area, Boston, MA

AGENCY: Coast Guard, DOT.

ACTION: Notice of proposed rulemaking, withdrawal.

SUMMARY: The Coast Guard is withdrawing the Notice of Proposed Rulemaking (NPRM) which proposed to decrease the safety zone ahead of loaded Liquefied Natural Gas Carrier (LNGC) vessels found at 33 CFR 165.110. In light of the terrorist attacks in New York City and Washington, DC on September 11, 2001, safety and security zones are being established to safeguard the LNGC vessels and LNG facilities in the Captain of the Port Boston, MA zone that conflict with this NPRM and thus necessitate its withdrawal.

DATES: The NPRM proposing to amend 33 CFR 165.110 that was published on May 2, 2000 (65 FR 25458) is withdrawn as of August 6, 2002.

ADDRESSES: Comments and related material received from the public, as well as documents mentioned in this preamble as being available in the docket, are part of docket CGD01–00–007 and are available for copying or inspection at Marine Safety Office Boston, 455 Commercial Street, Boston, MA between the hours of 8 a.m. and 3 p.m., Monday through Friday, except Federal holidays.

FOR FURTHER INFORMATION CONTACT: LT Dave Sherry, Marine Safety Office Boston, Maritime Security Operations Division, at (617) 223–3030.

SUPPLEMENTARY INFORMATION:

Regulatory History

On May 2, 2000 we published a notice of proposed rulemaking (NPRM) entitled ''Regulated Navigation Area, Boston, MA'' in the **Federal Register** (65 FR 25458). We received no comments on the proposed rule. No public hearing was requested and none was held. No final rule was published.

The NPRM proposed to change 33 CFR 165.110(a)(1) by removing the words ''two miles'' and replace them with the words ''one mile'', effectively reducing the size of the safety zone described therein. At this time this reduction was intended to reduce burdens imposed on commercial and recreational mariners by the safety zone.

Withdrawal

In light of the terrorist attacks in New York City and Washington, DC on September 11, 2001, the Captain of the Port Boston, MA has had to reconsider this NPRM. In a post-September 11, 2001 security assessment it was determined that LNGC vessels represent a potential terrorist target. As a result, safety and security zones are being established to increase protective measures around LNGC vessels while in transit, at anchor, and moored at a transfer facility in the COTP Boston, MA zone. These proposed increased measures are intended to protect LNGC vessels, the public, and the surrounding area from sabotage or other subversive acts, accidents, or other events of a similar nature. These safety and security zones have been proposed in an NPRM [Docket # CGD01–02–023] published July 26, 2002 (67 FR 48834). Since the proposal to reduce the size of the safety zone around LNGC vessels in transit published May 2, 2000, at 65 FR 25458, is in conflict with the July 26, 2002 NPRM, which increases protective measures in response to new potential threats, the May 2, 2000 NPRM must be withdrawn.

Dated: July 26, 2002.

B.M. Salerno,

Captain, U.S. Coast Guard, Captain of the Port, Boston, Massachusetts.

[FR Doc. 02–19850 Filed 8–5–02; 8:45 am]

BILLING CODE 4910–15–P

ENVIRONMENTAL PROTECTION AGENCY

40 CFR Part 52

[CA242–0334; FRL–7255–9]

Revisions to the California State Implementation Plan, Imperial County Air Pollution Control District

AGENCY: Environmental Protection Agency (EPA).

ACTION: Proposed rule.

SUMMARY: EPA is proposing a limited approval and limited disapproval of revisions to the Imperial County Air Pollution Control District (ICAPCD) portion of the California State Implementation Plan (SIP). These revisions concern volatile organic compound (VOC) emissions from aerospace manufacturing and rework coating operations. We are proposing action on ICAPCD Rule 425; a rule regulating these emission sources under the Clean Air Act as amended in 1990 (CAA or the Act). We are taking comments on this proposal and plan to follow with a final action.

DATE: Any comments must arrive by September 5, 2002.

ADDRESSES: Mail comments to Andy Steckel, Rulemaking Office Chief (AIR–4), U.S. Environmental Protection Agency, Region IX, 75 Hawthorne Street, San Francisco, CA 94105–3901.

You can inspect copies of the submitted SIP revisions and EPA's technical support document (TSD) at our Region IX office during normal business hours. You may also see copies of the submitted SIP revisions at the following locations:

California Air Resources Board, Stationary Source Division, Rule Evaluation Section, 1001 ''I'' Street, Sacramento, CA 95814;

Imperial County Air Pollution Control District, 150 South 9th Street, El Centro, CA 92243

FOR FURTHER INFORMATION CONTACT: Jerald S. Wamsley, Rulemaking Office (AIR–4), U.S. Environmental Protection Agency, Region IX, (415) 947–4111.

SUPPLEMENTARY INFORMATION: Throughout this document, ''we,'' ''us'' and ''our'' refer to EPA.

Table of Contents

I. The State's Submittal
A. What rule did the State submit?
B. Are there other versions of this rule?
C. What is the purpose of the submitted rule?
II. EPA's Evaluation and Action
A. How is EPA evaluating the rule?
B. Does the rule meet the evaluation criteria?
C. What are the rule's deficiencies?
D. EPA recommendations to further improve the rule
E. Proposed action and public comment
III. Background Information
A. Why was this rule submitted?
IV. Administrative Requirements

I. The State's Submittal

A. What Rule Did the State Submit?

Table 1 lists the rule addressed by this proposal with the dates that it was adopted by the local air agency and submitted by the California Air Resources Board (CARB).

TABLE 1—SUBMITTED RULE

Local agency	Rule #	Rule title	Adopted	Submitted
ICAPCD	425	Aerospace Coating Operations	09/14/99	05/26/00

On October 6, 2000, EPA found that the Rule 425 submittal met the completeness criteria in 40 CFR Part 51 Appendix V. These criteria must be met before formal EPA review begins.

B. Are There Other Versions of This Rule?

There are no previous versions of Rule 425 in the SIP.

C. What is the Purpose of the Submitted Rule?

Imperial County Air Pollution Control District Rule 425, Aerospace Coating Operations, is a rule designed to reduce volatile organic compound (VOC) emissions at industrial sites engaged in coating airplanes, space craft and their component parts. VOCs are emitted during the preparation and coating of the parts, as well as the drying phase of the coating process. Rule 425 establishes general emission limits in units of grams of Reactive Organic Compound (ROC) per litre (gr/l) of coating, less water and exempt compounds as applied. It also allows for the use of add-on emission controls whose combined capture and control efficiency must be 85.5 percent or better and specifies certain operating equipment. The rule also contains provisions for appropriate methods of analysis, exemptions, and record keeping. Rule 425 includes the following provisions:

1. applicability of and exemptions from the rule;
2. emission reduction requirements and prohibitions of the rule;
3. record keeping to demonstrate compliance with the rule; and,
4. test methods for determining compliance with the rule.

The TSD has more information about this rule.

II. EPA's Evaluation and Action

A. How is EPA Evaluating the Rule?

Imperial County is classified as a transitional area for ozone (*see* section 185(A) of the Act). In general, SIP rules in transitional areas must be enforceable (*see* section 110(a) of the Act), must not interfere with any applicable requirement concerning attainment and reasonable further progress (*see* section 110(l)), and must not relax existing requirements (*see* section 193).

Guidance and policy documents that we used to define enforceability and other requirements include the following:

1. Portions of the proposed post-1987 ozone and carbon monoxide policy that concern RACT, 52 FR 45044, November 24, 1987.
2. ''Issues Relating to VOC Regulation Cutpoints, Deficiencies, and Deviations; Clarification to Appendix D of November 24, 1987 **Federal Register** Notice,'' (Blue Book), notice of availability published in the May 25, 1988 **Federal Register**.
3. ''General Preamble for the Implementation of Title I of the Clean Air Act Amendments of 1990,'' 57 FR 13498, April 16, 1992.
4. ''Control of Volatile Organic Emissions from Coating Operations at Aerospace Manufacturing and Rework Operations,'' USEPA, 1997, EPA–453/R–97–004.

B. Does the rule meet the evaluation criteria?

Rule 425 improves the SIP by establishing VOC emissions limitations for certain sources in Imperial County that are not otherwise covered by a SIP rule. Such limitations reduce emissions of a precursor of a pollutant (ozone) for which the county was designated ''transitional'' nonattainment under the Act and for which the county continues to experience NAAQS exceedances. Transitional areas (*see* section 185A of the Act) must ensure, at a minimum, that any deficiencies regarding

enforceability of an existing rule implementing Reasonably Available Control Technology (RACT) (*i.e.,* pre-CAAA enactment RACT rule) are corrected. Transitional areas were exempt from all subpart 2 requirements (of part D, title I of the Act) until December 31, 1991, and this exemption continues until we redesignate the area as attainment or designate the area as nonattainment under section 107(d)(4) of the Act. *See* 57 FR 13498, 13523–13527 (April 16, 1992).

In 1992, EPA determined that Imperial County had not violated the ozone NAAQS from January 1, 1987 through December 31, 1991. (*See* letter from Daniel McGovern, Regional Administrator, U.S. EPA—Region 9, to James Boyd, Executive Director, CARB, dated August 3, 1992.) Our 1992 determination does not constitute a redesignation to attainment, and Imperial County has never been redesignated as an ozone attainment area under section 107(d)(3), nor has it been designated as nonattainment under section 107(d)(4) in light of post-1991 ozone NAAQS violations. Therefore, only the general requirement to correct deficiencies in enforceability of pre-1990 RACT rules applies for ozone planning purposes within Imperial County. Also, ICAPCD rule 425 would not supercede any existing SIP rule; thus, the requirement to correct deficiencies in enforceability in pre-1990 RACT rules does not apply.

However, ICAPCD Rule 425 does contain enforceability deficiencies that preclude our full approval of the rule. However, if finalized, our proposed limited disapproval action would not trigger a sanctions timeclock under Section 179 because the rule does not represent a required submittal under the Act.

Section 110(l) of the Act prohibits EPA from approving any revision of a SIP if the revision would interfere with any applicable requirement concerning attainment and reasonable further progress, or any other applicable requirement of the Act. In nonattainment areas, our evaluation extends beyond the issue of whether the submitted SIP revision is as stringent as the existing SIP provision that it would supercede and considers the submitted SIP revision in light of current ambient air quality and nonattainment planing requirements within the applicable nonattainment area. *See Hall* v. *EPA, 263 F.3d 926 (9th Cir.), amended 273 F.3d 1146 (2001).*

Based on ozone monitoring data in EPA's AIRS database, exceedances of the one-hour ozone NAAQS have been recorded each year since 1991 in Imperial County. However, the issue of classifying Imperial County under subpart B (of part D, title I of the Act) is complicated by its location next to a heavily populated area within Mexico. The population of the entire county is approximately 140,000; far less than the single Mexican city of Mexicali (approximately 660,000), which lies immediately across the border from the Imperial County city of Calexico. Given this situation, we have not determined, under section 185A of the Act, whether or not Imperial County attained the ozone NAAQS by December 31, 1991. Consequently, the planning requirements for Imperial County have not been determined. Also, while the State has not provided a demonstration under section 179B of the Act that Imperial County would have attained the standard by December 31, 1991 but for emissions emanating from outside the United States, we are aware of a CARB study showing that under certain circumstances, Mexicali's emissions do overwhelmingly impact air quality in Calexico. See California Air Resources Board, *Ozone Transport: 2001 Review,* April 2001.

Given the difficulty of establishing the root cause of historic and continuing ozone NAAQS exceedances in Imperial County and the ensuing uncertainty with respect to future ozone planning requirements, we have concluded that approval of ICAPCD Rule 425 will not interfere with any applicable requirement concerning attainment and reasonable further progress or any other applicable requirement of the Act; thus, it will comply with section 110(l). With the proposed approval, we recognize that the VOC emissions limitations and the enforceability provisions in this rule could conceivably be revisited if we were to classify the area under subpart 2 or require preparation of a maintenance plan.

Section 193 of the Act prohibits modifications to pre-1990 SIP control requirements in any nonattainment area for any nonattainment pollutant unless such modification insures equivalent or greater emission reductions of such air pollutant. ICAPCD Rule 425 would not replace pre-1990 SIP control requirements because EPA has not approved a previous version of this rule into the SIP. Consequently, Section 193 does not apply to our proposed action.

C. What Are the Rule's Deficiencies?

The provisions listed below conflict with section 110 and part D of the Act and prevent full approval of the SIP revision. There are two cases of unlimited ''director's discretion'' that are deficiencies under EPA's review criteria.

1. Paragraph A.3.c contains ''director's discretion'' in providing a specialty coatings exemption from the requirements of the rule.

2. Paragraph C.4 contains ''director's discretion'' in providing for an ''alternative recordkeeping plan'' as a means to meet the rule's recordkeeping provisions.

These ''director's discretion'' provisions allow for a variance from SIP requirements, which is not allowed under section 110(i) of the Act and the requirement that SIP provisions may only be modified by SIP revisions approved by EPA.

D. EPA Recommendations To Further Improve the Rule

The TSD describes additional rule revisions that do not affect EPA's current action but are recommended for the next time the local agency modifies the rule.

E. Proposed Action and Public Comment

As authorized in sections 110(k)(3) and 301(a) of the Act, EPA is proposing a limited approval of the submitted rule to improve the SIP. If finalized, this action would incorporate the submitted rule into the SIP, including those provisions identified as deficient. This approval is limited because EPA is simultaneously proposing a limited disapproval of the rule under section 110(k)(3). No Section 179 sanctions are associated with this disapproval action. Given Imperial County's classification as a transitional area, this submittal is not required under the CAA. Sanction clocks are not started for a disapproval of a submittal not mandated by the CAA. Note that the submitted rule has been adopted by the ICAPCD, and EPA's final limited disapproval would not prevent the local agency from enforcing it.

We will accept comments from the public on the proposed limited approval and limited disapproval for the next 30 days.

III. Background Information

A. Why Was This Rule Submitted?

VOCs help produce ground-level ozone and smog, which harm human health and the environment. Section 110(a) of the CAA requires each State to adopt and submit to EPA a plan which provides for implementation, maintenance and enforcement of the NAAQS. With respect to the ozone NAAQS, each State is required to submit regulations that control

emissions of ozone precursors, including VOC, along with other requirements. Table 2 lists some of the national milestones leading to the submittal of this local agency VOC rule.

TABLE 2—OZONE NONATTAINMENT MILESTONES

Date	Event
November 15, 1990.	Clean Air Act Amendments of 1990 were enacted. Pub. L. 101–549, 104 Stat. 2399, codified at 42 U.S.C. 7401–7671q.
April 16, 1992	EPA publishes ''General Preamble for the Implementation of Title I of the Clean Air Act Amendments of 1990'' (57 FR 13498), which provides EPA's interpretation of the requirements under the Act for transitional (ozone) nonattainment areas.

IV. Administrative Requirements

A. Executive Order 12866

The Office of Management and Budget has exempted this regulatory action from Executive Order 12866, Regulatory Planning and Review.

B. Executive Order 13211

This proposed rule is not subject to Executive Order 13211, ''Actions Concerning Regulations That Significantly Affect Energy Supply, Distribution, or Use'' (66 FR 28355 (May 22, 2001)) because it is not a significant regulatory action under Executive Order 12866.

C. Executive Order 13045

Executive Order 13045, entitled Protection of Children from Environmental Health Risks and Safety Risks (62 FR 19885, April 23, 1997), applies to any rule that: (1) Is determined to be ''economically significant'' as defined under Executive Order 12866, and (2) concerns an environmental health or safety risk that EPA has reason to believe may have a disproportionate effect on children. If the regulatory action meets both criteria, the Agency must evaluate the environmental health or safety effects of the planned rule on children, and explain why the planned regulation is preferable to other potentially effective and reasonably feasible alternatives considered by the Agency.

This rule is not subject to Executive Order 13045 because it does not involve decisions intended to mitigate environmental health or safety risks.

D. Executive Order 13132

Executive Order 13132, entitled Federalism (64 FR 43255, August 10, 1999) revokes and replaces Executive Orders 12612, Federalism and 12875, Enhancing the Intergovernmental Partnership. Executive Order 13132 requires EPA to develop an accountable process to ensure ''meaningful and timely input by State and local officials in the development of regulatory policies that have federalism implications.'' ''Policies that have federalism implications'' is defined in the Executive Order to include regulations that have ''substantial direct effects on the States, on the relationship between the national government and the States, or on the distribution of power and responsibilities among the various levels of government.'' Under Executive Order 13132, EPA may not issue a regulation that has federalism implications, that imposes substantial direct compliance costs, and that is not required by statute, unless the Federal government provides the funds necessary to pay the direct compliance costs incurred by State and local governments, or EPA consults with State and local officials early in the process of developing the proposed regulation. EPA also may not issue a regulation that has federalism implications and that preempts State law unless the Agency consults with State and local officials early in the process of developing the proposed regulation.

This proposed rule will not have substantial direct effects on the States, on the relationship between the national government and the States, or on the distribution of power and responsibilities among the various levels of government, as specified in Executive Order 13132, because it merely acts on a state rule implementing a federal standard, and does not alter the relationship or the distribution of power and responsibilities established in the Clean Air Act. Thus, the requirements of section 6 of the Executive Order do not apply to this proposed rule.

E. Executive Order 13175

Executive Order 13175, entitled ''Consultation and Coordination with Indian Tribal Governments'' (65 FR 67249, November 6, 2000), requires EPA to develop an accountable process to ensure ''meaningful and timely input by tribal officials in the development of regulatory policies that have tribal implications.'' ''Policies that have tribal implications'' is defined in the Executive Order to include regulations that have ''substantial direct effects on one or more Indian tribes, on the relationship between the Federal government and the Indian tribes, or on the distribution of power and responsibilities between the Federal government and Indian tribes.''

This proposed rule does not have tribal implications. It will not have substantial direct effects on tribal governments, on the relationship between the Federal government and Indian tribes, or on the distribution of power and responsibilities between the Federal government and Indian tribes, as specified in Executive Order 13175. Thus, Executive Order 13175 does not apply to this rule. In the spirit of Executive Order 13175, and consistent with EPA policy to promote communications between EPA and tribal governments, EPA specifically solicits additional comment on this proposed rule from tribal officials.

F. Regulatory Flexibility Act

The Regulatory Flexibility Act (RFA) generally requires an agency to conduct a regulatory flexibility analysis of any rule subject to notice and comment rulemaking requirements unless the agency certifies that the rule will not have a significant economic impact on a substantial number of small entities. Small entities include small businesses, small not-for-profit enterprises, and small governmental jurisdictions.

This proposed rule will not have a significant impact on a substantial number of small entities because SIP approvals under section 110 and subchapter I, part D of the Clean Air Act do not create any new requirements but simply act on requirements that the State is already imposing. Therefore, because the Federal SIP approval does not create any new requirements, I certify that this action will not have a significant economic impact on a substantial number of small entities.

EPA's proposed disapproval of the state request under section 110 and subchapter I, part D of the Clean Air Act does not affect any existing requirements applicable to small entities. Any pre-existing federal requirements remain in place after this disapproval. Federal disapproval of the state submittal does not affect state enforceability. Moreover, EPA's disapproval of the submittal does not impose any new Federal requirements. Therefore, I certify that this action will not have a significant economic impact on a substantial number of small entities.

Moreover, due to the nature of the Federal-State relationship under the Clean Air Act, preparation of flexibility

analysis would constitute Federal inquiry into the economic reasonableness of state action. The Clean Air Act forbids EPA to base its actions concerning SIPs on such grounds. *Union Electric Co.* v. *U.S. EPA,* 427 U.S. 246, 255–66 (1976); 42 U.S.C. 7410(a)(2).

G. Unfunded Mandates

Under section 202 of the Unfunded Mandates Reform Act of 1995 (''Unfunded Mandates Act''), signed into law on March 22, 1995, EPA must prepare a budgetary impact statement to accompany any proposed or final rule that includes a Federal mandate that may result in estimated costs to State, local, or tribal governments in the aggregate; or to private sector, of $100 million or more. Under section 205, EPA must select the most cost-effective and least burdensome alternative that achieves the objectives of the rule and is consistent with statutory requirements. Section 203 requires EPA to establish a plan for informing and advising any small governments that may be significantly or uniquely impacted by the rule.

EPA has determined that the proposed action does not include a Federal mandate that may result in estimated costs of $100 million or more to either State, local, or tribal governments in the aggregate, or to the private sector. This proposed Federal action acts on pre-existing requirements under State or local law, and imposes no new requirements. Accordingly, no additional costs to State, local, or tribal governments, or to the private sector, result from this action.

H. National Technology Transfer and Advancement Act

Section 12 of the National Technology Transfer and Advancement Act (NTTAA) of 1995 requires Federal agencies to evaluate existing technical standards when developing a new regulation. To comply with NTTAA, EPA must consider and use ''voluntary consensus standards'' (VCS) if available and applicable when developing programs and policies unless doing so would be inconsistent with applicable law or otherwise impractical.

EPA believes that VCS are inapplicable to today's proposed action because it does not require the public to perform activities conducive to the use of VCS.

List of Subjects in 40 CFR Part 52

Environmental protection, Air pollution control, Hydrocarbons, Intergovernmental relations, Ozone, Reporting and recordkeeping requirements, Volatile organic compound.

Authority: 42 U.S.C. 7401 *et seq.*

Dated: July 16, 2002.

Keith Takata,

Associate Regional Administrator, Region IX.

[FR Doc. 02–19794 Filed 8–5–02; 8:45 am]

BILLING CODE 6560–50–P

FEDERAL COMMUNICATIONS COMMISSION

47 CFR Part 73

[DA 02–1620, MB Docket No. 10463, RM–10463]

Radio Broadcasting Services; Balmorhea, TX

AGENCY: Federal Communications Commission.

ACTION: Proposed rule.

SUMMARY: This document requests comments on a petition filed by Linda Crawford proposing the allotment of Channel 283C at Balmorhea, Texas, as that community's first local FM service. The coordinates for Channel 283C at Balmorhea are 31–08–42 and 103–36–54. There is a site restriction 21.7 kilometers (13.5 miles) northeast of the community. Since Balmorhea is located within 320 kilometers of the U.S.-Mexican border, concurrence of the Mexican Government will be requested for the allotment at Balmorhea.

DATES: Comments must be filed on or before September 9, 2002, and reply comments on or before September 24, 2002.

ADDRESSES: Federal Communications Commission, 445 Twelfth Street, SW., Washington, DC. 20554. In addition to filing comments with the FCC, interested parties should serve the petitioner, as follows: Linda Crawford, 3500 Maple Avenue, #1320, Dallas, Texas 75219.

FOR FURTHER INFORMATION CONTACT: Kathleen Scheuerle, Media Bureau, (202) 418–2180.

SUPPLEMENTARY INFORMATION: This is a summary of the Commission's Notice of Proposed Rule Making, MB Docket No. 02–185, adopted July 3, 2002 and released July 19, 2002. The full text of this Commission decision is available for inspection and copying during normal business hours in the Commission's Reference Center 445 Twelfth Street, SW., Washington, DC 20554. The complete text of this decision may also be purchased from the Commission's duplicating contractor, Qualex International Portals II, 445 12th Street, SW., Room CY–B402, Washington, DC, 20554, telephone 202–863–2893, facsimile 202–863–2898, or via e-mail *qualexint@aol.com.*

Provisions of the Regulatory Flexibility Act of 1980 do not apply to this proceeding.

Members of the public should note that from the time a Notice of Proposed Rule Making is issued until the matter is no longer subject to Commission consideration or court review, all *ex parte* contacts are prohibited in Commission proceedings, such as this one, which involve channel allotments. *See* 47 CFR 1.1204(b) for rules governing permissible ex parte contact.

For information regarding proper filing procedures for comments, *see* 47 CFR 1.415 and 1.420.

List of Subjects in 47 CFR Part 73

Radio, Radio broadcasting.

For the reasons discussed in the preamble, the Federal Communications Commission proposes to amend 47 CFR part 73 as follows:

PART 73—RADIO BROADCAST SERVICES

1. The authority citation for part 73 continues to read as follows:

Authority: 47 U.S.C. 154, 303, 334 and 336.

§ 73.202 [Amended]

2. Section 73.202(b), the Table of FM Allotments under Texas, is amended by adding Balmorhea, Channel 283C.

Federal Communications Commission.

John A. Karousos,

Assistant Chief, Audio Division, Media Bureau.

[FR Doc. 02–19731 Filed 8–5–02; 8:45 am]

BILLING CODE 6712–01–P

FEDERAL COMMUNICATIONS COMMISSION

47 CFR Part 73

[DA 02–1730, MB Docket No. 02–192, RM–10507]

Radio Broadcasting Services; Albany, VT

AGENCY: Federal Communications Commission.

ACTION: Proposed rule.

SUMMARY: This document requests comments on a petition filed by Lutterloh Community Broadcasters proposing the allotment of Channel 233A at Albany, Vermont, as that community's first local broadcast service. The coordinates for Channel 233A at Albany are 44–45–26 and 72–

20–09. There is a site restriction 4.6 kilometers (2.8 miles) northeast of the community. Canadian concurrence will be requested for the allotment of Channel 233A at Albany as a specially negotiated short-spaced allotment.

DATES: Comments must be filed on or before September 9, 2002, and reply comments on or before September 24, 2002.

ADDRESSES: Federal Communications Commission, 445 Twelfth Street, SW., Washington, DC 20554. In addition to filing comments with the FCC, interested parties should serve the petitioner's counsel, as follows: Jerrold Miller, Miller & Miller, P.C., P. O. Box 33003, Washington, DC 20033.

FOR FURTHER INFORMATION CONTACT: Kathleen Scheuerle, Media Bureau, (202) 418–2180.

SUPPLEMENTARY INFORMATION: This is a summary of the Commission's Notice of Proposed Rule Making, MB Docket No. 02–192, adopted July 10, 2002, and released July 19, 2002. The full text of this Commission decision is available for inspection and copying during regular business hours at the FCC's Reference Information Center, Portals II, 445 Twelfth Street, SW., Room CY–A257, Washington, DC 20554. The complete text of this decision may also be purchased from the Commission's duplicating contractor, Qualex International, Portals II, 445 12th Street, SW., Room CY–B402, Washington, DC, 20554, telephone 202–863–2893, facsimile 202–863–2898, or via e-mail *qualexint@aol.com*.

Provisions of the Regulatory Flexibility Act of 1980 do not apply to this proceeding.

Members of the public should note that from the time a Notice of Proposed Rule Making is issued until the matter is no longer subject to Commission consideration or court review, all *ex parte* contacts are prohibited in Commission proceedings, such as this one, which involve channel allotments. *See* 47 CFR 1.1204(b) for rules governing permissible *ex parte* contact.

For information regarding proper filing procedures for comments, *see* 47 CFR 1.415 and 1.420.

List of Subjects in 47 CFR Part 73

Radio, Radio broadcasting.

For the reasons discussed in the preamble, the Federal Communications Commission proposes to amend 47 CFR Part 73 as follows:

PART 73—RADIO BROADCAST SERVICES

1. The authority citation for part 73 continues to read as follows:

Authority: 47 U.S.C. 154, 303, 334 and 336.

§ 73.202 [Amended]

2. Section 73.202(b), the Table of FM Allotments under Vermont, is amended by adding Albany, Channel 233A.

Federal Communications Commission.

John A. Karousos,

Assistant Chief, Audio Division, Media Bureau.

[FR Doc. 02–19732 Filed 8–5–02; 8:45 am]

BILLING CODE 6712–01–U

FEDERAL COMMUNICATIONS COMMISSION

47 CFR Part 73

[DA 02–1650, MB Docket No. 02–188, RM–10462]

Radio Broadcasting Services; Encinal, TX

AGENCY: Federal Communications Commission.

ACTION: Proposed rule.

SUMMARY: This document requests comments on a petition filed by Linda Crawford proposing the allotment of Channel 273A at Encinal, Texas, as that community's first local FM service. The coordinates for Channel 273A at Encinal are 28–06–40 and 99–27–15. There is a site restriction 12.5 kilometers (7.8 miles) northwest of the community. Since Encinal is located within 320 kilometers of the U.S.-Mexican border, concurrence of the Mexican Government will be requested for the allotment at Encinal.

DATES: Comments must be filed on or before September 9, 2002, and reply comments on or before September 24, 2002.

ADDRESSES: Federal Communications Commission, 445 Twelfth Street, SW., Washington, DC 20554. In addition to filing comments with the FCC, interested parties should serve the petitioner, as follows: Linda Crawford, 3500 Maple Avenue, #1320, Dallas, Texas 75219.

FOR FURTHER INFORMATION CONTACT: Kathleen Scheuerle, Media Bureau, (202) 418–2180.

SUPPLEMENTARY INFORMATION: This is a summary of the Commission's Notice of Proposed Rule Making, MB Docket No. 02–188, adopted July 3, 2002, and released July 19, 2002. The full text of this Commission decision is available for inspection and copying during normal business hours in the Commission's Reference Center 445 Twelfth Street, SW., Washington, DC 20554. The complete text of this decision may also be purchased from the Commission's duplicating contractor, Qualex International Portals II, 445 12th Street, SW., Room CY–B402, Washington, DC 20554, telephone 202–863–2893, facsimile 202–863–2898, or via e-mail *qualexint@aol.com*.

Provisions of the Regulatory Flexibility Act of l980 do not apply to this proceeding.

Members of the public should note that from the time a Notice of Proposed Rule Making is issued until the matter is no longer subject to Commission consideration or court review, all *ex parte* contacts are prohibited in Commission proceedings, such as this one, which involve channel allotments. *See* 47 CFR 1.1204(b) for rules governing permissible *ex parte* contact.

For information regarding proper filing procedures for comments, *see* 47 CFR 1.415 and 1.420.

List of Subjects in 47 CFR Part 73

Radio, Radio broadcasting.

For the reasons discussed in the preamble, the Federal Communications Commission proposes to amend 47 CFR part 73 as follows:

PART 73—RADIO BROADCAST SERVICES

1. The authority citation for part 73 continues to read as follows:

Authority: 47 U.S.C. 154, 303, 334 and 336.

§ 73.202 [Amended]

2. Section 73.202(b), the Table of FM Allotments under Texas, is amended by adding Encinal, Channel 273A.

Federal Communications Commission.

John A. Karousos,

Assistant Chief, Audio Division, Media Bureau.

[FR Doc. 02–19734 Filed 8–5–02; 8:45 am]

BILLING CODE 6712–01–P

FEDERAL COMMUNICATIONS COMMISSION

47 CFR Part 73

[DA 02–1621; MB Docket No. 02–186; RM–10494]

Radio Broadcasting Services; Los Banos and Planada, CA

AGENCY: Federal Communications Commission.

ACTION: Proposed rule.

SUMMARY: This document requests comments on a petition for rulemaking filed on behalf of Buckley Communications, Inc., licensee of FM Station KHTN, Channel 284B, Los

Banos, California, requesting the reallotment of Channel 284B to Planada, California, as that community's first local aural transmission service, and modification of its authorization accordingly. The petitioner's modification proposal complies with the provisions of Section 1.420(i) of the Commission's Rules and therefore, we will not accept competing expressions of interest in the use of Channel 284B at Planada, or require the petitioner to demonstrate the availability of an additional equivalent class channel. Coordinates used for Channel 284B at Planada are those of the petitioner's currently authorized transmitter site at 37–11–29 NL and 120–32–03 WL.

DATES: Comments must be filed on or before September 9, 2002, and reply comments on or before September 24, 2002.

ADDRESSES: Secretary, Federal Communications Commission, Washington, DC 20554. In addition to filing comments with the FCC, interested parties should serve the petitioner's counsel, as follows: Martin R. Leader, David D. Oxenford and Colette M. Capretz, Esqs., Law Offices of Shaw Pittman, 2300 N Street, NW., Washington, DC 20037–1128.

FOR FURTHER INFORMATION CONTACT: Nancy Joyner, Media Bureau, (202) 418–2180.

SUPPLEMENTARY INFORMATION: This is a synopsis of the Commission's Notice of Proposed Rule Making, MB Docket No. 02–186, adopted July 3, 2002, and released July 19, 2002. The full text of this Commission decision is available for inspection and copying during normal business hours in the FCC's Reference Information Center (Room CY–A257), 445 Twelfth Street, SW., Washington, DC. The complete text of this decision may also be purchased from the Commission's copy contractor, Qualtex International, Portals II, 445 12th Street, SW., Room CY–B402, Washington, DC 20554, telephone (202) 863–2893.

Provisions of the Regulatory Flexibility Act of 1980 do not apply to this proceeding.

Members of the public should note that from the time a Notice of Proposed Rule Making is issued until the matter is no longer subject to Commission consideration or court review, all *ex parte* contacts are prohibited in Commission proceedings, such as this one, which involve channel allotments. *See* 47 CFR 1.1204(b) for rules governing permissible *ex parte* contacts.

For information regarding proper filing procedures for comments, *see* 47 CFR 1.415 and 1.420.

List of Subjects in 47 CFR Part 73

Radio, Radio broadcasting.

For the reasons discussed in the preamble, the Federal Communications Commission proposes to amend 47 CFR part 73 as follows:

PART 73—RADIO BROADCAST SERVICES

1. The authority citation for part 73 continues to read as follows:

Authority: 47 U.S.C. 154, 303, 334 and 336.

§ 73.202 [Amended]

2. Section 73.202(b), the Table of FM Allotments under California, is amended by removing Channel 284B at Los Banos, and by adding Planada, Channel 284B.

Federal Communications Commission.

John A. Karousos,

Assistant Chief, Audio Division, Media Bureau.

[FR Doc. 02–19744 Filed 8–5–02; 8:45 am]

BILLING CODE 6712–01–U

FEDERAL COMMUNICATIONS COMMISSION

47 CFR Part 73

[DA 02–1729; MM Docket No. 01–296; RM–10299]

Radio Broadcasting Services; Roscommon, MI

AGENCY: Federal Communications Commission.

ACTION: Proposed rule; withdrawal.

SUMMARY: This document dismisses a petition for rulemaking filed by Charles Crawford requesting the allotment of Channel 246A at Roscommon, Michigan. *See* 66 FR 54191, October 26, 2001. Charles Crawford withdrew his interest in the allotment of Channel 246A at Roscommon, Michigan. With this action, this proceeding is terminated.

FOR FURTHER INFORMATION CONTACT: Kathleen Scheuerle, Media Bureau, (202) 418–2180.

SUPPLEMENTARY INFORMATION: This is a summary of the Commission's Report and Order, MM Docket No. 01–296, adopted July 10, 2002, and released July 19, 2002. The full text of this Commission decision is available for inspection and copying during regular business hours in the FCC Reference Information Center, Portals II, 445 Twelfth Street, SW., Room CY–A257, Washington, DC, 20554. The complete text of this decision may also be purchased from the Commission's duplicating contractor, Qualex International, Portals II, 445 Twelfth Street, SW., Room CY–B402, Washington, DC, 20554, telephone 202–863–2893, facsimile 202–863–2898, or via e-mail *qualexint@aol.com*.

Federal Communications Commission.

John A. Karousos,

Assistant Chief, Audio Division, Media Bureau.

[FR Doc. 02–19742 Filed 8–5–02; 8:45 am]

BILLING CODE 6712–01–P

Notices

Federal Register

Vol. 67, No. 151

Tuesday, August 6, 2002

This section of the FEDERAL REGISTER contains documents other than rules or proposed rules that are applicable to the public. Notices of hearings and investigations, committee meetings, agency decisions and rulings, delegations of authority, filing of petitions and applications and agency statements of organization and functions are examples of documents appearing in this section.

DEPARTMENT OF AGRICULTURE

Agricultural Marketing Service

7 CFR Chapter I

Grain Inspection, Packers and Stockyards Administration

7 CFR Chapter VIII

Facilitating the Marketing of U.S. Agricultural Products With New Testing and Process Verification Services

AGENCY: Agricultural Marketing Service; Grain Inspection, Packers and Stockyards Administration, USDA.

ACTION: Notice.

SUMMARY: In response to market needs, the U.S. Department of Agriculture's (USDA) Agricultural Marketing Service (AMS) and Grain Inspection, Packers and Stockyards Administration (GIPSA) have developed and are planning to develop additional voluntary testing and process verification programs to facilitate the marketing of agricultural products.

FOR FURTHER INFORMATION CONTACT: Marianne Plaus, Chief, Market Analysis and Standards Branch, Federal Grain Inspection Service, GIPSA, USDA, 1400 Independence Avenue, SW., Room 1641–S, Washington, DC 20250–3630; e-mail: *Marianne.Plaus@usda.gov;* tel: 202–690–3460; fax: 202–720–1015.

SUPPLEMENTARY INFORMATION: The marketing structure of the U.S. food and feed industry is undergoing significant change as it moves from a supply-driven to a consumer-driven market. The emergence of value-enhanced commodities and a niche market for non-biotechnology-derived commodities have created a greater need to differentiate products in the handling system. In light of these changes, USDA sought public comment, through an Advance Notice of Proposed Rulemaking (ANPR), on how USDA can best foster the marketing of grains, oilseeds, and other commodities in this evolving marketplace. The ANPR, which USDA's GIPSA and AMS published on November 30, 2000, in the **Federal Register** (65 FR 71272), closed on April 16, 2001. As a result of that ANPR, many respondents expressed a clear need for USDA to facilitate the marketing of products, not through the traditional grades and standards, but through the exchange of information and services concerning analytical testing and various marketing mechanisms, such as identity preservation and process verification. In response to market needs, USDA's AMS and GIPSA have begun to provide and are planning to develop a variety of programs and services to facilitate the marketing of agricultural products, as discussed below.

Standardizing Testing Methodology

The rising importance of value-enhanced products with specific quality attributes and the emergence of a non-biotech niche market have created a need in the marketplace for additional testing and standardization procedures. USDA's experience in providing testing, weighing, and inspection services provides a strong foundation to enhance the accuracy, standardization, and availability of tests for new value-enhanced products. To this end, USDA's AMS and GIPSA have begun to provide a variety of programs and services to meet market needs.

Sampling Guidelines

Recognizing that sampling is the single largest source of error in the analysis of grains, GIPSA developed and offered sampling guidelines to the grain-handling industry. As industry interest develops, AMS will provide a similar service for seed, fruit, and vegetable markets.

Proficiency Programs

At the Agency's Technical Center in Kansas City, Missouri, GIPSA conducted a Proficiency Study to assess the capability and reliability of DNA-based testing for U.S. commercialized biotechnology events in corn. This study provided evidence of a need for standardization and quality assurance tools in biotechnology analysis. On February 7, 2002, GIPSA began offering a voluntary Proficiency Program for organizations testing for biotechnology-derived grains and oilseeds to help improve the reliability of testing. As industry interest develops, AMS will provide a similar service for seed, fruit, and vegetable markets.

Rapid Test Performance Evaluation Programs

At GIPSA's Technical Center, the Agency also evaluates the performance of rapid tests developed to detect biotechnology-derived grains and oilseeds, and confirms the tests operate in accordance with manufacturers' claims. As industry interest develops, AMS will provide a similar service for seed, fruit, and vegetable markets at its laboratory facility in Gastonia, North Carolina.

Testing Services

AMS and GIPSA intend to provide voluntary testing services using rapid test kits and other testing technology whose performance the Agencies have verified.

Methods Development

AMS and GIPSA continue to develop methods and evaluate commercial test instrumentation to measure end-use value attributes that are meaningful to the marketplace. Examples of such attributes include oil concentration in soybeans and corn and protein concentration in wheat and soybeans.

USDA will continue to monitor market trends and needs and will continue to expand its testing and standardization programs in response to market need. If new regulations are necessary, USDA will propose them when appropriate. At this time, USDA is not proposing any rulemaking or regulatory actions.

Process Verification

Many of the ANPR respondents also described a wide variety of differing identity preservation and marketing systems used in the private sector. Given the growing importance of these marketing systems as more value-enhanced grains enter the commercial market and the non-biotech niche market continues, USDA is exploring options for expanding its process verification programs to include seeds and bulk commodities such as grains and oilseeds. USDA's experience in providing voluntary, audit-based programs for fruits, vegetables, and

livestock products provides a strong foundation upon which to expand.

Voluntary Market-Based Process Verification Program for Seeds

Under the authority of the Agricultural Marketing Act of 1946, 7 U.S.C. 1621–1627, USDA's AMS anticipates that it will propose a voluntary, audit-based system of process verification for the production and labeling of seed. This program would be based on existing seed certification (or equivalent) standards and procedures, and existing AMS process verification programs, with additional quality assurance criteria as needed to substantiate label claims regarding seed quality, including genetic purity. This program will be based on market need and is expected to be of particular benefit to participants who intend to market seeds that have regulatory restrictions or concerns with transgenic event(s) that have been deregulated and commercialized in the United States but not in certain other markets.

Under this program, AMS would verify that minimum criteria for seed production and handling have been followed, thus providing a reasonable assurance that claims regarding seed quality and genetic purity are truthful. AMS will use auditing documentation and onsite monitoring in the process verification program for seeds. AMS will certify that the seed lots produced under this program have met established quality assurance criteria. A statement could be included on a seed label to the effect that USDA-approved quality assurance procedures have been followed. Seed buyers will be assured that appropriate production and handling practices were followed to ensure the accuracy of seed quality claims.

Further, minimum seed certification standards and procedures, as well as labeling requirements, are published in the Federal Seed Act regulations (7 CFR 201). The Federal Seed Act, 7 U.S.C. 1592 *et seq.,* is a truth-in-labeling law that applies to agricultural and vegetable seed in interstate commerce. In addition to labeling requirements of the Federal Seed Act, additional information is allowed on the seed label, provided the claims are truthful. Additional label claims could include information pertaining to identity preservation of the seed lot, specific claims regarding genetic purity or maximum level of occurrence of transgenic material. Under the Federal Seed Act, techniques similar to those under the prospective 1946 Act program, could be used to support any additional claims.

Voluntary Market-Based Process Verification Program for Agricultural Commodities

Under the authority of the Agricultural Marketing Act of 1946, USDA's GIPSA anticipates that it will propose a voluntary, audit-based system of process verification for grains, oilseeds, rice, pulses, and products derived from these products. The proposed system will involve defining minimum requirements for process-based programs to provide assurances through third party process verification services. This program will be based on internationally-recognized quality management system standards. The program will verify existing quality system plans developed by the private sector. It will be flexible enough to incorporate, where appropriate, already existing standards and procedures such as those developed by private organizations. At the same time, the program will have sufficient safeguards to ensure the integrity of its results. This program will be based on market need and is expected to be of particular benefic to participants who intend to market commodities with specific end-use attributes or that have regulatory restrictions or concerns with transgenic event(s) that have been deregulated and commercialized in the United States but not in certain other markets.

Under this prospective program, GIPSA would verify that minimum requirements for commodity production, handling, and processing have been followed. GIPSA will verify compliance with the requirements by reviewing required process documentation plans and auditing the performance adherence to the prescribed plan to ensure the plan is followed. GIPSA will certify as to the market partipants' adherence to their processes, when applicable.

GIPSA and AMS plan to propose process verification service programs in the **Federal Register** in the near future.

Authority: 7 U.S.C. 71 *et seq.* and 7 U.S.C. 1621 *et seq.*

Dated: July 31, 2002.

Donna Reifschneider,

Administrator, Grain Inspection, Packers and Stockyards Administration.

A.J. Yates,

Administrator, Agricultural Marketing Service.

[FR Doc. 02–19668 Filed 8–5–02; 8:45 am]

BILLING CODE 3410–EN–U

DEPARTMENT OF AGRICULTURE

Forest Service

Revision of the Land and Resource Management Plan for the Tonto National Forest located in Gila, Maricopa, Pinal and Yavapai Counties, AZ

AGENCY: Forest Service, USDA.

ACTION: Cancellation Notice.

SUMMARY: On September 30, 1999, a Notice of Intent (NOI) to prepare an environmental impact statement of the revision of the Land and Management Plan for the Tonto National forest was published in the **Federal Register** (64 FR 52765–52766). This 1999 NOI is hereby rescinded.

FOR FURTHER INFORMATION CONTACT: Eddie Alford, Planning Group Leader or Paul Stewart, Acting Team Leader, Tonto National Forest, 2324 E. McDowell Road, Phoenix, AZ 85006, telephone (602) 225–5200.

SUPPLEMENTARY INFORMATION: On November 30, 2001 (66 FR 59775–59777), the Chief of the Forest Service, as required by the Land and Resource Management Planning Rule adopted in November 2000, published in plan revision schedule for National Forest System units that have not completed revisions of their plans. This notice set out the schedule for revisions and an explanation of some of the factors that affected scheduling decisions. This schedule indicates a revision initiation date for the Tonto National Forest of 2005. A new notice of intent to revise will be published with the initiation of the plan revision process.

Dated: July 16, 2002.

Lucia M. Turner,

Regional Forester.

[FR Doc. 02–19451 Filed 8–5–02; 8:45 am]

BILLING CODE 3410–11–M

DEPARTMENT OF AGRICULTURE

Forest Service

Tuolumne County Resource Advisory Committee

AGENCY: Forest Service, USDA.

ACTION: Notice of meeting.

SUMMARY: The Tuolumne County Resource Advisory Committee will meet on August 5, 2002, at the City of Sonora Fire Department, in Sonora, California. The purpose of the meeting is to receive and review final project proposal submissions for 2002 funds.

DATES: The meeting will be held August 5, 2002, from 12:00 p.m. to 3:00 p.m.

ADDRESSES: The meeting will be held at the City of Sonora Fire Department located at 201 South Shepherd Street, in Sonora, California (CA 95370).

FOR FURTHER INFORMATION CONTACT: Pat Kaunert, Committee Coordinator, USDA, Stanislaus National Forest, 19777 Greenley Road, Sonora, CA 95370, (209) 532–3671; e-mail *pkaunert@fs.fed.us.*

SUPPLEMENTARY INFORMATION: Agenda items to be covered include: (1) Continue project proposal review from July 15 meeting; (2) Committee members interview project proponents regarding project specifies (3) Finalize project selection criteria for 2002 funds; (4) Public Comments; (5) Discuss purpose of upcoming August 12, 2002 meeting. This meeting is open to the public.

Dated: July 18, 2002.

Glenn Gottschall,

Acting Forest Supervisor.

[FR Doc. 02–19787 Filed 8–5–02; 8:45 am]

BILLING CODE 3410–EO–M

DEPARTMENT OF AGRICULTURE

Forest Service

Tuolumne County Resource Advisory Committee

AGENCY: Forest Service, USDA.

ACTION: Notice of meeting.

SUMMARY: The Tuolumne County Resource Advisory Committee will meet on August 12, 2002, at the City of Sonora Fire Department, in Sonora, California. The purpose of the meeting is to receive and review final project proposal submissions for 2002 funds.

DATES: The meeting will be held August 12, 2002, from 12 p.m. to 3 p.m.

ADDRESSES: The meeting will be held at the City of Sonora Fire Department located at 201 South Shepherd Street, in Sonora, California (CA 95370).

FOR FURTHER INFORMATION CONTACT: Pat Kaunert, Committee Coordinator, USDA, Stanislaus National Forest, 19777 Greenley Road, Sonora, CA 95370, (209) 532–3671; E-mail *pkaunert@fs.fed.us.*

SUPPLEMENTARY INFORMATION: Agenda items to be covered include: (1) Continue project proposal review focusing on final clarification; (2) Determine agreement on top projects (3) Public comments; (4) Take final vote on projects to recommend for funding; (5) Discuss purpose of upcoming August 19, 2002 meeting. This meeting is open to the public.

Dated: July 22, 2002.

Glenn Gottschall,

Acting Forest Supervisor.

[FR Doc. 02–19788 Filed 8–5–02; 8:45 am]

BILLING CODE 3410–ED–M

DEPARTMENT OF AGRICULTURE

Forest Service

Tuolumne County Resource Advisory Committee

AGENCY: Forest Service, USDA.

ACTION: Notice of meeting.

SUMMARY: The Tuolumne County Resource Advisory Committee will meet on August 19, 2002, at the City of Sonora Fire Department, in Sonora, California. The purpose of the meeting is to receive and review final project proposal submissions for 2002 funds.

DATES: The meeting will be held August 19, 2002, from 12 p.m. to 3 p.m.

ADDRESSES: The meeting will be held at the City of Sonora Fire Department located at 201 South Shepherd Street, in Sonora, California (CA 95370).

FOR FURTHER INFORMATION CONTACT: Pat Kaunert, Committee Coordinator, USDA, Stanislaus National Forest, 19777 Greenley Road, Sonora, CA 95370, (209) 532–3671; EMAIL *pkaunert@fs.fed.us.*

SUPPLEMENTARY INFORMATION: Agenda items to be covered include: (1) Take final vote on any remaining projects to recommend for funding; (2) Public comments; (3) Discuss purpose of upcoming September 9, 2002 meeting. This meeting is open to the public.

Dated: July 22, 2002.

Glenn Gottschall,

Acting Forest Supervisor.

[FR Doc. 02–19789 Filed 8–5–02; 8:45 am]

BILLING CODE 3410–ED–M

COMMISSION ON CIVIL RIGHTS

Agenda and Notice of Public Meeting of the Arizona Advisory Committee

Notice is hereby given, pursuant to the provisions of the rules and regulations of the U.S. Commission on Civil Rights, that a planning meeting with briefing of the Arizona Advisory Committee to the Commission will convene at 9 a.m. and adjourn at 3 p.m. on August 23, 2002, at the Radisson Hotel City Center, 181 W. Broadway, Tucson, Arizona 85701. The purpose of the planning meeting with briefing is to hold new member orientation and discuss the United States-Mexico border crossing fatalities.

Persons desiring additional information, or planning a presentation to the Committee, should contact Philip Montez, Director of the Western Regional Office, 213–894–3437 (TDD 213–894–3435). Hearing-impaired persons who will attend the meeting and require the services of a sign language interpreter should contact the Regional Office at least ten (10) working days before the scheduled date of the meeting.

The meeting will be conducted pursuant to the provisions of the rules and regulations of the Commission.

Dated at Washington, DC, July 31, 2002.

Ivy L. Davis,

Chief, Regional Programs Coordination Unit.

[FR Doc. 02–19778 Filed 8–5–02; 8:45 am]

BILLING CODE 6335–01–P

COMMISSION ON CIVIL RIGHTS

Agenda and Notice of Public Meeting of the Florida Advisory Committee

Notice is hereby given, pursuant to the provisions of the rules and regulations of the U.S. Commission on Civil Rights, that a planning meeting with briefing of the Florida Advisory Committee to the Commission will convene at 1 p.m. and adjourn at 5 p.m. on Thursday, August 29, 2002, at the Omni Hotel Jacksonville, 245 Waters Street, Jacksonville, Florida 32202. The purpose of the planning meeting with briefing is to: (1) Provide new member orientation, (2) be briefed by the mayor and the staff of Jacksonville on city contracts, and (3) be briefed by the Clay County officials on the incarceration of immigrants.

Persons desiring additional information, or planning a presentation to the Committee, should contact Bobby D. Doctor, Director of the Southern Regional Office, 404–562–7000 (TDD 404–562–7004). Hearing-impaired persons who will attend the meeting and require the services of a sign language interpreter should contact the Regional Office at least ten (10) working days before the scheduled date of the meeting.

The meeting will be conducted pursuant to the provisions of the rules and regulations of the Commission.

Dated at Washington, DC, July 26, 2002.

Ivy L. Davis,

Chief, Regional Programs Coordination Unit.

[FR Doc. 02–19777 Filed 8–5–02; 8:45 am]

BILLING CODE 6335–01–P

DEPARTMENT OF COMMERCE

[I.D. 080102B]

Submission for OMB Review; Comment Request

The Department of Commerce has submitted to the Office of Management and Budget (OMB) for clearance the following proposal for collection of information under the provisions of the Paperwork Reduction Act (44 U.S.C. Chapter 35).

Agency: National Oceanic and Atmospheric Administration (NOAA).

Title: Northeast Region Survey of Intent and Capacity to Process Fish and Shellfish.

Form Number(s): None.

OMB Approval Number: 0648–0235.

Type of Request: Regular submission.

Burden Hours: 8.

Number of Respondents: 30.

Average Hours Per Response: 15 minutes.

Needs and Uses: The Fishery Management Plans for Atlantic Mackerel, Squid, and Butterfish include requirements that the National Marine Fisheries Service and/or the Mid-Atlantic Fishery Management Council annually survey domestic processors and joint venture operators to establish industry capacity to utilize the managed species. If US industry is unable to utilize fully the allowed harvest of these species, this information is used in establishing suitable levels of catch for joint ventures and/or direct foreign harvest.

Affected Public: Business or other for-profit organizations, individuals or households.

Frequency: Annually.

Respondent's Obligation: Voluntary.

OMB Desk Officer: David Rostker, (202) 395–3897.

Copies of the above information collection proposal can be obtained by calling or writing Madeleine Clayton, Departmental Paperwork Clearance Officer, (202) 482–3129, Department of Commerce, Room 6608, 14th and Constitution Avenue, NW, Washington, DC 20230 (or via the Internet at MClayton@doc.gov).

Written comments and recommendations for the proposed information collection should be sent within 30 days of publication of this notice to David Rostker, OMB Desk Officer, Room 10202, New Executive Office Building, Washington, DC 20503.

Dated: July 30, 2002.

Madeleine Clayton,

Departmental Paperwork Clearance Officer, Office of the Chief Information Officer.

[FR Doc. 02–19817 Filed 8–5–02; 8:45 am]

BILLING CODE 3510–22–S

DEPARTMENT OF COMMERCE

[I.D. 080102A]

Submission for OMB Review; Comment Request

The Department of Commerce has submitted to the Office of Management and Budget (OMB) for clearance the following proposal for collection of information under the provisions of the Paperwork Reduction Act (44 U.S.C. Chapter 35).

Agency: National Oceanic and Atmospheric Administration (NOAA).

Title: U.S. Fishermen Fishing in Russian Waters.

Form Number(s): None.

OMB Approval Number: 0648–0228.

Type of Request: Regular submission.

Burden Hours: 1.

Number of Respondents: 1.

Average Hours Per Response: 30 minutes.

Needs and Uses: U.S. fishermen who wish to fish in the Russian Federation Economic Zone may apply for a Russian permit by submitting application information to the National Marine Fisheries Service for transmittal to Russian authorities. Permit holders must provide information regarding their permits and must report when entering or leaving the U.S. Exclusive Economic Zone.

Affected Public: Business and other for-profit organizations.

Frequency: On occasion.

Respondent's Obligation: Mandatory.

OMB Desk Officer: David Rostker, (202) 395–3897.

Copies of the above information collection proposal can be obtained by calling or writing Madeleine Clayton, Departmental Paperwork Clearance Officer, (202) 482–3129, Department of Commerce, Room 6608, 14th and Constitution Avenue, NW, Washington, DC 20230 (or via the Internet at MClayton@doc.gov).

Written comments and recommendations for the proposed information collection should be sent within 30 days of publication of this notice to David Rostker, OMB Desk Officer, Room 10202, New Executive Office Building, Washington, DC 20503.

Dated: July 30, 2002.

Madeleine Clayton,

Departmental Paperwork Clearance Officer, Office of the Chief Information Officer.

[FR Doc. 02–19818 Filed 8–5–02; 8:45 am]

BILLING CODE 3510–22–S

DEPARTMENT OF COMMERCE

International Trade Administration

Antidumping or Countervailing Duty Order, Finding, or Suspended Investigation; Opportunity To Request Administrative Review

AGENCY: Import Administration, International Trade Administration, Department of Commerce.

ACTION: Notice of opportunity to request administrative review of antidumping or countervailing duty order, finding, or suspended investigation.

Background

Each year during the anniversary month of the publication of an antidumping or countervailing duty order, finding, or suspension of investigation, an interested party, as defined in section 771(9) of the Tariff Act of 1930, as amended, may request, in accordance with section 351.213 (2001) of the Department of Commerce (the Department) Regulations, that the Department conduct an administrative review of that antidumping or countervailing duty order, finding, or suspended investigation.

Opportunity to Request a Review: Not later than the last day of August 2002, interested parties may request administrative review of the following orders, findings, or suspended investigations, with anniversary dates in August for the following periods:

	Period to be reviewed
Antidumping Duty Proceeding	
Argentina:	
Oil Country Tubular Goods, A–357–810	8/1/01–7/31/02
Seamless Line and Pressure Pipe, A–357–809	8/1/01–7/31/02
Australia: Corrosion-Resistant Carbon Steel Flat Products, A–602–803	8/1/01–7/31/02
Belgium: Cut-to-Length Carbon Steel Plate, A–423–805	8/1/01–7/31/02

	Period to be reviewed
Brazil:	
Cut-to-Length Carbon Steel Plate, A–351–817	8/1/01–7/31/02
Seamless Line and Pressure Pipe, A–351–826	8/1/01–7/31/02
Canada:	
Corrosion-Resistant Carbon Steel Flat Products, A–122–822	8/1/01–7/31/02
Pure Magnesium, A–122–814	8/1/01–7/31/02
Czech Republic: Carbon and Alloy Seamless Standard, Line, and Pressure Pipe (Under 4½ Inches), A–851–802	8/1/01–7/31/02
Finland: Cut-to-Length Carbon Steel Plate, A–405–802	8/1/01–7/31/02
France:	
Corrosion-Resistant Carbon Steel Flat Products, A–427–808	8/1/01–7/31/02
Industrial Nitrocellulose, A–427–009	8/1/01–7/31/02
Germany:	
Corrosion-Resistant Carbon Steel Flat Products, A–428–815	8/1/01–7/31/02
Cut-to-Length Carbon Steel Plate, A–428–816	8/1/01–7/31/02
Seamless Line and Pressure Pipe, A–428–820	8/1/01–7/31/02
Italy:	
Grain Oriented Electrical Steel, A–475–811	8/1/01–7/31/02
Oil Country Tubular Goods, A–475–816	8/1/01–7/31/02
Granular Polytetrafluoroethylene Resin, A–475–703	8/1/01–7/31/02
Japan:	
Brass Sheet & Strip, A–588–704	8/1/01–7/31/02
Corrosion-Resistant Carbon Steel Flat Products, A–588–824	8/1/01–7/31/02
Oil Country Tubular Goods, A–588–835	8/1/01–7/31/02
Granular Polytetrafluoroethylene Resin, A–588–707	8/1/01–7/31/02
Tin Mill Products, A–588–854	8/1/01–7/31/02
Mexico:	
Carbon and Alloy Seamless Standard, Line, and Pressure Pipe (Over 4½ Inches), A–201–827	8/1/01–7/31/02
Gray Portland Cement and Cement Clinker, A–201–802	8/1/01–7/31/02
Cut-to-Length Carbon Steel Plate, A–201–809	8/1/01–7/31/02
Oil Country Tubular Goods, A–201–817	8/1/01–7/31/02
Poland: Cut-to-Length Carbon Steel Plate, A–455–802	8/1/01–7/31/02
Republic of Korea:	
Corrosion-Resistant Carbon Steel Flat Products, A–580–816	8/1/01–7/31/02
Oil Country Tubular Goods, A–580–825	8/1/01–7/31/02
Structural Steel Beams, A–580–841	8/1/01–7/31/02
Romania:	
Carbon and Alloy Seamless Standard, Line, and Pressure Pipe (Under 4½ Inches), A–485–805	8/1/01–7/31/02
Cut-to-Length Carbon Steel Plate, A–485–803	8/1/01–7/31/02
Spain: Cut-to-Length Carbon Steel Plate, A–469–803	8/1/01–7/31/02
Sweden: Cut-to-Length Carbon Steel Plate, A–401–805	8/1/01–7/31/02
The People's Republic of China:	
Petroleum Wax Candles, A–570–504	8/1/01–7/31/02
Sulfanilic Acid, A–570–815	8/1/01–7/31/02
The United Kingdom: Cut-to-Length Carbon Steel Plate, A–412–814	8/1/01–7/31/02
Turkey: Aspirin, A–489–602	8/1/01–7/31/02
Countervailing Duty Proceedings	
Belgium: Cut-to-Length Carbon Steel Plate, C–423–806	1/1/01–12/31/01
Brazil: Cut-to-Length Carbon Steel Plate, C–351–818	1/1/01–12/31/01
Canada:	
Pure Magnesium, C–122–815	1/1/01–12/31/01
Alloy Magnesium, C–122–815	1/1/01–12/31/01
France:	
Corrosion-Resistant Carbon Steel Flat Products, C–427–810	1/1/01–12/31/01
Stainless Steel Sheet and Strip in Coils, C–427–815	1/1/01–12/31/01
Germany:	
Corrosion-Resistant Carbon Steel Flat Products, C–428–817	1/1/01–12/31/01
Cut-to-Length Carbon Steel Plate, C–428–817	1/1/01–12/31/01
Italy:	
Oil Country Tubular Goods, C–475–817	1/1/01–12/31/01
Stainless Steel Sheet and Strip in Coils, C–425–825	1/1/01–12/31/01
Mexico: Cut-to-Length Carbon Steel Plate, C–201–810	1/1/01–12/31/01
Republic of Korea:	
Corrosion-Resistant Carbon Steel Plate, C–580–818	1/1/01–12/31/01
Stainless Steel Sheet and Strip in Coils, C–580–835	1/1/01–12/31/01
Structural Steel Beams, C–580–841	1/1/01–12/31/01
Spain: Cut-to-Length Carbon Steel Plate, C–469–804	1/1/01–12/31/01
Sweden: Cut-to-Length Carbon Steel Plate, C–401–804	1/1/01–12/31/01
United Kingdom: Cut-to-Length Carbon Steel Plate, C–412–815	1/1/01–12/31/01

Suspension Agreements

None.

In accordance with section 351.213(b) of the regulations, an interested party as defined by section 771(9) of the Act may request in writing that the Secretary conduct an administrative review. For both antidumping and countervailing duty reviews, the interested party must specify the individual producers or exporters covered by an antidumping finding or an antidumping or countervailing duty order or suspension agreement for which it is requesting a review, and the requesting party must state why it desires the Secretary to review those particular producers or exporters. If the interested party intends for the Secretary to review sales of merchandise by an exporter (or a producer if that producer also exports merchandise from other suppliers) which were produced in more than one country of origin and each country of origin is subject to a separate order, then the interested party must state specifically, on an order-by-order basis, which exporter(s) the request is intended to cover.

Six copies of the request should be submitted to the Assistant Secretary for Import Administration, International Trade Administration, Room 1870, U.S. Department of Commerce, 14th Street & Constitution Avenue, NW., Washington, DC 20230. The Department also asks parties to serve a copy of their requests to the Office of Antidumping/Countervailing Enforcement, Attention: Sheila Forbes, in room 3065 of the main Commerce Building. Further, in accordance with section 351.303(f)(l)(i) of the regulations, a copy of each request must be served on every party on the Department's service list.

The Department will publish in the **Federal Register** a notice of ''Initiation of Administrative Review of Antidumping or Countervailing Duty Order, Finding, or Suspended Investigation'' for requests received by the last day of August 2002. If the Department does not receive, by the last day of August 2002, a request for review of entries covered by an order, finding, or suspended investigation listed in this notice and for the period identified above, the Department will instruct the Customs Service to assess antidumping or countervailing duties on those entries at a rate equal to the cash deposit of (or bond for) estimated antidumping or countervailing duties required on those entries at the time of entry, or withdrawal from warehouse, for consumption and to continue to collect the cash deposit previously ordered.

This notice is not required by statute but is published as a service to the international trading community.

Dated: July 30, 2002.

Holly A. Kuga,

Senior Office Director, Group II, Office 4, Import Administration.

[FR Doc. 02–19823 Filed 8–5–02; 8:45 am]

BILLING CODE 3510–DS–P

DEPARTMENT OF COMMERCE

International Trade Administration

[A–201–820]

Fresh Tomatoes From Mexico

AGENCY: Import Administration, International Trade Administration, Department of Commerce.

ACTION: Notice of termination of suspension agreement, termination of sunset review, and resumption of antidumping investigation: Fresh Tomatoes from Mexico.

EFFECTIVE DATE : July 30, 2002

SUMMARY: On May 31, 2002, Mexican tomato growers/exporters accounting for a significant percentage of all fresh tomatoes imported into the United States from Mexico provided written notice to the Department of Commerce of their withdrawal from the agreement suspending the antidumping investigation on fresh tomatoes from Mexico. Because the suspension agreement no longer covers substantially all imports of fresh tomatoes from Mexico, the Department of Commerce hereby terminates the suspension agreement, terminates the sunset review of the suspended investigation, and resumes the antidumping investigation.

FOR FURTHER INFORMATION CONTACT: Yang Jin Chun or Mark Ross at (202) 482–5760 or (202) 482–4794, respectively; Office of AD/CVD Enforcement 3, Import Administration, International Trade Administration, U.S. Department of Commerce, 14th Street & Constitution Avenue, NW., Washington, DC 20230.

SUPPLEMENTARY INFORMATION:

Applicable Statute and Regulations

Unless otherwise indicated, all citations to the statute are references to the provisions effective January 1, 1995, the effective date of the amendments made to the Tariff Act of 1930 (the Act) by the Uruguay Round Agreements Act. In addition, unless otherwise indicated, all citations to Department of Commerce (Department) regulations refer to the regulations codified at 19 CFR part 353 (1996).

Background

On April 18, 1996, the Department initiated an antidumping investigation to determine whether imports of fresh tomatoes from Mexico are being, or are likely to be, sold in the United States at less than fair value (LTFV) (61 FR 18377, April 25, 1996). On May 16, 1996, the United States International Trade Commission (ITC) notified the Department of its affirmative preliminary injury determination.

On October 10, 1996, the Department and Mexican tomato growers/exporters initialed a proposed agreement suspending the antidumping investigation, and on October 28, 1996, the Department preliminarily determined that imports of fresh tomatoes from Mexico are being sold at LTFV in the United States. See *Notice of Preliminary Determination of Sales at Less Than Fair Value and Postponement of Final Determination: Fresh Tomatoes from Mexico*, 61 FR 56607 (November 1, 1996) (*Preliminary Determination*). On the same day the *Preliminary Determination* was signed, the Department and certain growers/exporters of fresh tomatoes from Mexico signed the final suspension agreement. See *Suspension of Antidumping Investigation: Fresh Tomatoes from Mexico*, 61 FR 56618 (November 1, 1996).

On May 31, 2002, Mexican tomato growers/exporters accounting for a significant percentage of all fresh tomatoes imported into the United States from Mexico submitted to the Department a notice of their withdrawal from the agreement suspending the antidumping investigation on fresh tomatoes from Mexico. Because the suspension agreement would no longer cover substantially all imports of fresh tomatoes from Mexico when the withdrawals became effective, on June 19, 2002, the Department issued a notice of intent to terminate the suspension agreement, intent to terminate the five-year sunset review of the suspended investigation, and intent to resume the antidumping investigation. The Department also invited interested parties to submit comments on whether it should use updated information to complete the antidumping investigation. See *Notice of Intent to Terminate Suspension Agreement, Intent to Terminate the Five-Year Sunset Review, Intent to Resume Antidumping Investigation, and Request for Comments on the Use of Updated Information*, 67 FR 43278 (June 27, 2002).

Interested parties filed comments and rebuttal comments on the use of

updated information. Upon consideration of these comments, we have determined that, for completion of this particular investigation, we will use the original information submitted by the original respondents for the original period of investigation. See July 30, 2002, memorandum entitled ''Resumed Antidumping Investigation on Fresh Tomatoes from Mexico; Respondent Selection and Period of Investigation.

On July 3, 2002, the California Tomato Commission filed letters of accession from twenty-four Baja California growers/exporters of fresh tomatoes, asserting that these growers/exporters represent new signatories and, when added to the existing Baja California signatories, represent 94.8 percent of exports of fresh tomatoes from Baja California to the United States. The California Tomato Commission suggested that, with the accession of these Baja California growers/exporters, the Department should reevaluate participation in the suspension agreement and determine whether it now covers substantially all imports of fresh tomatoes from Mexico.

Scope of the Investigation

The products covered by this investigation are all fresh or chilled tomatoes (fresh tomatoes) except for cocktail tomatoes and those tomatoes which are for processing. For purposes of this investigation, cocktail tomatoes are greenhouse-grown tomatoes, generally larger than cherry tomatoes and smaller than Roma or common round tomatoes, and are harvested and packaged on-the-vine for retail sale. For purposes of this investigation, processing is defined to include preserving by any commercial process, such as canning, dehydrating, drying or the addition of chemical substances, or converting the tomato product into juices, sauces or purees. Further, imports of fresh tomatoes for processing are accompanied by an ''Importer's Exempt Commodity Form'' (FV–6) (within the meaning of 7 CFR 980.501(a)(2) and 980.212(I)). Fresh tomatoes that are imported for cutting up, not further processed (*e.g.*, tomatoes used in the preparation of fresh salsa or salad bars), and not accompanied by an FV–6 form are covered by the scope of this investigation.

All commercially grown tomatoes sold in the United States, both for the fresh market and for processing, are classified as Lycopersicon esculentum. Important commercial varieties of fresh tomatoes include common round, cherry, plum, and pear tomatoes, all of which, with the exception of cocktail tomatoes, are covered by this investigation. Tomatoes imported from Mexico covered by this investigation are classified under the following subheadings of the Harmonized Tariff Schedules of the United States (HTSUS), according to the season of importation: 0702 and 9906.07.01 through 9906.07.09. Although the HTSUS numbers are provided for convenience and customs purposes, our written description of the scope of this proceeding is dispositive.

Period of Investigation

The period of investigation (POI) is March 1, 1995, through February 29, 1996.

Termination of Suspension Agreement

The agreement suspending the antidumping investigation on fresh tomatoes from Mexico is an agreement to eliminate injury under section 734(c) of the Act. Under this type of suspension agreement the Department may suspend an investigation based upon an agreement with exporters accounting for substantially all of the imports of the subject merchandise. The regulations in turn define ''substantially all'' as exporters (growers and resellers) which have accounted for not less than 85 percent by value or volume of the merchandise during the period for which the Department is measuring dumping in the investigation or such other period that the Secretary considers representative. See 19 CFR 353.18(c).

On May 31, 2002, signatory growers/exporters accounting for a large percentage of all fresh tomatoes imported into the United States from Mexico provided written notice to the Department of their withdrawal from the agreement suspending the antidumping investigation on fresh tomatoes from Mexico. Pursuant to the terms of the suspension agreement, signatory growers/exporters may withdraw from the agreement upon 60 days written notice to the Department. Therefore, these withdrawals from the suspension agreement become effective on July 30, 2002.

On July 3, 2002, the California Tomato Commission filed letters of accession from twenty-four Baja California growers/exporters of fresh tomatoes, asserting that these companies represent new signatories and, when added to the existing Baja California signatories, represent 94.8 percent of the Baja California fresh tomatoes imported into the United States during 2001. With the accession of these Baja California growers/exporters, the California Tomato Commission suggests that the Department reevaluate participation in the suspension agreement and determine whether the suspension agreement covers substantially all imports of fresh tomatoes from Mexico.

To ensure that termination of this suspension agreement is not premature, we have reevaluated participation in the suspension agreement as of July 30, 2002, the date on which the May 31, 2002, withdrawals become effective. Based on our analysis of import data from the U.S. Customs Service (Customs) and given the large percentage of imports which these growers/exporters represent, the signatories remaining in the agreement will not account for substantially all of the imports of the subject merchandise after these withdrawals become effective. See July 30, 2002, memorandum entitled ''Analysis of Whether Signatories Account for Substantially All Imports.''

Because the suspension agreement does not cover substantially all imports of fresh tomatoes from Mexico without the participation of the growers/exporters which provided notice of their withdrawal on May 31, 2002, the Department determines that terminating the suspension agreement effective July 30, 2002, is appropriate.

End of the Five-Year Sunset Review

On October 1, 2001, the Department initiated a five-year sunset review of the suspended antidumping investigation on fresh tomatoes from Mexico pursuant to section 751(c) of the Act (66 FR 49926, October 1, 2001). On January 29, 2002, the Department published its preliminary results of the sunset review (67 FR 4237) (*Preliminary Results*). In the *Preliminary Results*, the Department preliminarily found that termination of the suspended antidumping duty investigation on fresh tomatoes from Mexico would be likely to lead to the continuation or recurrence of dumping. On May 13, 2002, the Department extended the deadline for the final results of sunset review until August 27, 2002 (67 FR 35099, May 17, 2002).

Because the Department is terminating the suspension agreement, there is no longer a suspended investigation for which to perform a sunset review. Therefore, the Department hereby announces its termination of the sunset review of the suspended LTFV investigation on fresh tomatoes from Mexico, effective July 30, 2002.

Resumption of Antidumping Investigation

With the termination of the suspension agreement on July 30, 2002, in accordance with section 734(i)(1)(B) of the Act, the Department hereby

resumes the underlying antidumping investigation. Pursuant to section 734(i)(1)(B) of the Act, the Department resumes the investigation as if it had published the affirmative preliminary determination under section 733(b) of the Act on July 30, 2002.

As explained in the *Preliminary Determination* at 61 FR 56609, the Department postponed the final determination until the 135th day after the date of the preliminary determination. The Department therefore intends to make its final determination in the resumed investigation by December 12, 2002.

Verification

As provided in section 782(i) of the Act, the Department will verify all information determined to be acceptable for use in making the final determination.

Suspension of Liquidation

The Department will instruct Customs to suspend liquidation of entries of fresh tomatoes from Mexico that are entered, or withdrawn from warehouse, for consumption on or after the effective date of the termination of the suspension agreement, which is July 30, 2002. Customs shall require antidumping duty cash deposits or bonds for entries of the subject merchandise based on the preliminary dumping margins, which are as follows:

Grower/Exporter	Weighted-average percentage margin
San Vincente Camalu	4.16
Ernesto Fernando Echavarria Salazar Grupo Solidario	11.89
Arturo Lomeli Villalobas S.A. de C.V.	26.97
Eco-Cultivos S.A. de C.V.	188.45
Ranchos Los Pinos S. de R.L. de C.V.	10.26
Administradora Horticola del Tamazula	28.30
Agricola Yory, S. de P.R. de R.I.	11.95
All Others	17.56

International Trade Commission

The Department will notify the ITC of its termination of the suspension agreement, termination of the sunset review of the suspended investigation, and resumption of the LTFV investigation. If the Department makes a final affirmative determination, the ITC is scheduled to make its final determination concerning injury within 45 days after publication of the Department's final determination. If both the Department's and the ITC's final determinations are affirmative, the Department will issue an antidumping duty order.

Administrative Protective Order Access

Administrative protective orders previously granted in the original investigation will remain in effect. Parties must submit any necessary amendments for changes in staff promptly.

We are issuing and publishing this determination under section 733(f) of the Act and 19 CFR 353.15.

Dated: July 30, 2002.

Faryar Shirzad,

Assistant Secretary for Import Administration.

[FR Doc. 02–19822 Filed 8–5–02; 8:45 am]

BILLING CODE 3510–DS–S

DEPARTMENT OF COMMERCE

International Trade Administration

[A–570–848]

Freshwater Crawfish Tail Meat From the People's Republic of China: Notice of Rescission, in Part, of Antidumping Duty Administrative Review for the Period September 1, 2000, Through August 31, 2001

AGENCY: Import Administration, International Trade Administration, U.S. Department of Commerce.

SUMMARY: In response to timely requests from interested parties, the Department of Commerce (the Department) initiated an administrative review of the antidumping duty order on freshwater crawfish tail meat from the People's Republic of China (PRC) covering the period September 1, 2000, to August 31, 2001. *See Initiation of Antidumping and Countervailing Duty Administrative Reviews and Requests for Revocation in Part,* 66 FR 54195 (October 26, 2001). Because the petitioner has withdrawn its request for an administrative review of certain companies, the Department is rescinding, in part, this review of freshwater crawfish tail meat from the PRC, in accordance with section 351.213(d)(1) of the Department's regulations. In addition, the Department is also rescinding the administrative review with respect to three companies which we have found had no exports of the subject merchandise to the United States during the period of review, in accordance with section 351.213(d)(3) of the Department's regulations.

EFFECTIVE DATE: August 6, 2002.

FOR FURTHER INFORMATION CONTACT: Doug Campau or Maureen Flannery, AD/CVD Enforcement, Import Administration, International Trade Administration, U.S. Department of Commerce, 14th Street and Constitution Avenue, NW., Washington DC 20230; telephone: (202) 482–1395 or (202) 482–3020, respectively.

SUPPLEMENTARY INFORMATION:

Applicable Statute and Regulations

Unless otherwise indicated, all citations to the statute are references to the provisions of the Tariff Act of 1930, as amended (the Act). In addition, unless otherwise indicated, all citations to the Department's regulations are to the provisions codified at 19 CFR part 351 (2001).

Background

On September 4, 2001, the Department published a notice of opportunity to request an administrative review of the antidumping duty order on freshwater crawfish tail meat from the PRC. *See Antidumping or Countervailing Duty Order, Finding, or Suspended Investigation; Opportunity To Request Administrative Review* (66 FR 46257). On September 28, 2001, the Department received a timely request from the Crawfish Processors Alliance, petitioner in this case, and the Louisiana Department of Agriculture & Forestry and Bob Odom, Commissioner, for an administrative review covering the period from September 1, 2000, through August 31, 2001, in accordance with 19 CFR 351.213(b)(1). The petitioner requested a review of the following companies: China Everbright; China Kingdom Import & Export Co., Ltd., aka China Kingdoma Import & Export Co., Ltd., aka Zhongda Import & Export Co., Ltd. (China Kingdom); Coastal (Jiang Su) Foods Co., Ltd. (Coastal Foods); Fujian Pelagic Fishery Group Co. (Fujian Pelagic); Hefei Zhongbao Aquatic Co., Ltd. (Hefei Zhongbao); Huaiyin Foreign Trade Corporation (5), aka Jiangsu Hilong International Trading (Huaiyin 5); Huaiyin Foreign Trade Corporation (30) (Huaiyin 30); Jiangsu Cereals, Oils, & Foodstuffs Import & Export Corp. (Jiangsu Cereals); Nantong Delu Aquatic Food Co., Ltd. (Nantong Delu); Nantong Shengfa Frozen Food Co., Ltd. (Nantong Shengfa); Ningbo Nanlian Frozen Foods Co., Ltd. (Ningbo Nanlian); North Supreme Seafood (Zhejiang) Co., Ltd. (North Supreme); Qingdao Rirong Foodstuff Co., Ltd., aka Qingdao Rirong Foodstuffs (Qingdao Rirong); Qingdao Zhengri Seafood Co., Ltd., aka Qingdao Zhengri Seafoods (Qingdao Zhengri); Rizhao Riyuan Marine and Food Products Co., Ltd. (Rizhao Riyuan); Shanghai Taoen International Trading Co., Ltd. (Shanghai Taoen); Shantou

SEZ Yangfeng Marine Products Co. (Shantou SEZ); Shouzhou Huaxiang Foodstuffs Co., Ltd. (Shouzhou Huaxiang); Suqian Foreign Trade Corp., aka Suqian Foreign Trading (Suqian Foreign Trade); Taizhou Tianhe Aquatic Products Co., Ltd. (Taizhou Tianhe); Weishan Fukang Foodstuffs Co., Ltd. (Weishan Fukang); Yancheng Baolong Biochemical Products Co., Ltd. (Yancheng Baolong); Yancheng Foreign Trade Corp., aka Yancheng Foreign Trading, aka Yang Cheng Foreign Trading (Yancheng Foreign Trade); Yancheng Haiteng Aquatic Products & Foods Co., Ltd. (Yancheng Haiteng); Yancheng Yaou Seafoods (Yancheng Yaou); Yangzhou Lakebest Foods Co., Ltd. (Yangzhou Lakebest); and Yixing Ban Chang Foods Co., Ltd. (Yixing Ban Chang).

On September 28, 2001, China Kingdom and Qingdao Zhengri, which were included in the petitioner's request for review, also requested review of their own shipments. The Department published a notice of initiation of this antidumping duty administrative review on October 26, 2001. *See Initiation of Antidumping and Countervailing Duty Administrative Reviews and Requests for Revocation in Part*, 65 FR 54195 (October 26, 2001).

On December 10, 2001, petitioner withdrew its request for review of the following companies: China Everbright, China Kingdom, Coastal Foods, Huaiyin 30, Hefei Zhongbao, Jiangsu Cereals, North Supreme, Rizhao Riyuan, Shouzhou Huaxiang, Taizhou Tianhe, Yancheng Baolong, Yancheng Yaou, and Yixing Ban Chang. On January 24, 2002, petitioner withdrew its request for review of the following companies: Nantong Delu, Nantong Shengfa, Weishan Fukang, and Yancheng Haiteng.

On November 27, 2001, Huaiyin 5 informed the Department that it did not export the subject merchandise to the United States during the period of review. On November 28, 2001, Ningbo Nanlian informed the Department that it did not export the subject merchandise to the United States during the period of review, and that its affiliated importer, Louisiana Packing Company, did not import the subject merchandise to the United States during the period of review. In addition, on December 27, 2001, Shanghai Taoen informed the Department that it did not produce, sell, or export the subject merchandise to the United States during the period of review. The Department reviewed data on entries under the order during the period of review from the U.S. Customs Service, and requested further information regarding certain entries from Huaiyin 5 and Ningbo Nanlian. Based on the March 18, 2002 responses to its inquiries, the Department is satisfied that those companies had no reportable U.S. entries or exports of subject merchandise during the period of review. The Department's review of U.S. Customs data regarding Shanghai Taoen revealed no reportable U.S. entries or exports of subject merchandise by that company during the period of review.

Rescission, in Part, of the Administrative Review

Pursuant to our regulations, the Department will rescind an administrative review, ''if a party that requested the review withdraws the request within 90 days of the date of publication of notice of initiation of the requested review.'' *See* 19 CFR 351.213(d)(1). Since petitioner submitted timely withdrawals of its request for review of China Everbright, China Kingdom, Coastal Foods, Huaiyin 30, Hefei Zhongbao, Jiangsu Cereals, Nantong Delu, Nantong Shengfa, North Supreme, Rizhao Riyuan, Shouzhou Huaxiang, Taizhou Tianhe, Weishan Fukang, Yancheng Baolong, Yancheng Haiteng, Yancheng Yaou, and Yixing Ban Chang, the Department is rescinding its antidumping administrative review of those companies, with the exception of China Kingdom and Yancheng Yaou, in accordance with 19 CFR 351.213(d)(1). On September 28, 2001, China Kingdom requested review of its own shipments. Therefore, the Department cannot rescind the review of that company. In the previous administrative review, covering the period September 1, 1999, through August 31, 2000, Yancheng Yaou and Qingdao Zhengri were treated as a single entity. In the current review, Qingdao Zhengri and Yancheng Yaou have not reported any changes with respect to their ownership and operations. Therefore, although petitioner withdrew its request for review of Yancheng Yaou, the Department is still considering whether it is appropriate to rescind the review for that company.

In addition, the Department's regulations provide that the Secretary ''may rescind an administrative review, in whole or only with respect to a particular exporter or producer, if the Secretary concludes that, during the period covered by the review, there were no entries, exports, or sales of the subject merchandise, as the case may be.'' *See* 19 CFR 351.213(d)(3). The Department reviewed data on entries under the order during the period of review from the U.S. Customs Service, and, after further inquiries, is satisfied that Huaiyin 5, Ningbo Nanlian, and Shanghai Taoen had no reportable U.S. entries or exports of the subject merchandise during the period of review. Therefore, the Department is rescinding the administrative review with respect to those companies, in accordance with 19 CFR 351.213(d)(3).

On June 3, 2002, the Department issued a memorandum stating our intent to rescind, in part, the administrative review of the antidumping order on freshwater crawfish tail meat from the PRC. *See Memorandum to the File from Adina Teodorescu, Case Analyst, through Barbara E.Tillman, Director, Office of AD/CVD Enforcement VII: Intent to Partially Rescind the Antidumping Administrative Review* (on file in the Department's Central Records Unit in Room B–099). We provided copies of the memorandum to all the parties which had received a questionnaire in this review. *See Memorandum to the File, through Maureen Flannery, from Adina Teodorescu: Partial Rescission Memorandum for the Antidumping Review of Freshwater Crawfish Tail Meat from the People's Republic of China* (June 3, 2002); *Memorandum to the File, through Maureen Flannery, from Adina Teodorescu: Partial Rescission Memorandum for the Administrative Review of Freshwater Crawfish Tail Meat from the People's republic of China* (June 21, 2002); *Memorandum to the File, through Maureen Flannery, from Adina Teodorescu: Attempts to Contact Parties about the Partial Rescission Memorandum for the Administrative Review of Freshwater Crawfish Tail Meat from the People's Republic of China* (July 11, 2002). Since none of the parties commented on our intent to rescind, the Department is rescinding, in part, the administrative review of the antidumping duty order on freshwater crawfish tail meat from the PRC for the period September 1, 2000, through August 31, 2001. The Department will issue appropriate assessment instructions to the Customs Service. Although the Department is rescinding the administrative review of Shouzhou Huaxiang and North Supreme, those companies are still subject to new shipper reviews for the period September 1, 2000, through August 31, 2001.

Based on these rescissions, the administrative review of the antidumping duty order on freshwater crawfish tail meat from the PRC, for the period September 1, 2000, through August 31, 2001, now covers the following companies: China Kingdom,

Fujian Pelagic, Qingdao Rirong, Qingdao Zhengri/Yancheng Yaou, Shantou SEZ, Suqian Foreign Trade, Yancheng Foreign Trade, and Yangzhou Lakebest.

This notice serves as a reminder to parties subject to administrative protective order (APO) of their responsibility concerning the disposition of proprietary information disclosed under APO in accordance with 19 CFR 351.305(a)(3). Timely written notification of the return or destruction of APO materials or conversion to judicial protective order is hereby requested. Failure to comply with the regulations and terms of an APO is a sanctionable violation.

This determination and notice are issued and published in accordance with 19 CFR 351.213(d)(4) and sections 751(a)(1) and 777(i)(1) of the Act.

Dated: July 24, 2002.

Bernard T. Carreau,

Acting Assistant Secretary for Import Administration.

[FR Doc. 02–19826 Filed 8–5–02; 8:45 am]

BILLING CODE 3510–DS–P

DEPARTMENT OF COMMERCE

International Trade Administration

[A–570–863]

Honey from the People's Republic of China: Initiation of New Shipper Antidumping Duty Reviews

AGENCY: Import Administration, International Trade Administration, Department of Commerce.

EFFECTIVE DATE: August 6, 2002.

FOR FURTHER INFORMATION CONTACT: Angelica Mendoza or Donna Kinsella at (202) 482–3019 or (202) 482–0194, respectively; Antidumping and Countervailing Duty Enforcement Group III, Import Administration, International Trade Administration, U.S. Department of Commerce, 14th Street and Constitution Avenue, N.W., Washington, D.C. 20230.

SUPPLEMENTARY INFORMATION:

The Applicable Statute

Unless otherwise indicated, all citations to the statute are references to the provisions effective January 1, 1995, the effective date of the amendments made to the Tariff Act of 1930, as amended (the Act) by the Uruguay Round Agreements Act (URAA). In addition, unless otherwise indicated, all citations to the Department's regulations are references to the provisions codified at 19 CFR Part 351 (2002).

Background

The Department has received timely requests from Chengdu-Dujiangyan Dubao Bee Industrial Co., Ltd (''Dubao'') and Wuhan Bee Healthy Co., Ltd. (''Wuhan Bee''), in accordance with 19 CFR 351.214(c), for new shipper reviews of the antidumping duty order on honey from the People's Republic of China (''PRC''), which has a December annual anniversary month and a June semiannual anniversary month. *See Notice of Amended Final Determination of Sales at Less Than Fair Value and Antidumping Duty Order; Honey from the People's Republic of China*, 66 FR 63670 (December 10, 2001). As required by 19 CFR 351.214(b)(2)(i) and (iii)(A), each of the companies identified above, which are also producers, has certified that it did not export honey to the United States during the period of investigation (''POI''), and that it has never been affiliated with any exporter or producer which did export honey during the POI. Each company has further certified that its export activities are not controlled by the central government of the PRC, satisfying the requirements of 19 CFR 351.214(b)(2)(iii)(B). Pursuant to the Department's regulations at 19 CFR 351.214(b)(2)(iv)(A), Dubao and Wuhan Bee each submitted documentation establishing the date on which it first shipped the subject merchandise to the United States, the volume of that first shipment, and the date of the first sale to an unaffiliated customer in the United States.

In accordance with section 751(a)(2)(B) of the Act, as amended, and 19 CFR 351.214(d)(i), and based on information on the record, we are initiating new shipper reviews for Dubao and Wuhan Bee. It is the Department's usual practice in cases involving non-market economies to require that a company seeking to establish eligibility for an antidumping duty rate separate from the country-wide rate provide de jure and de facto evidence of an absence of government control over the company's export activities. Accordingly we will issue a questionnaire to Dubao and Wuhan Bee, including a separate rates section. If the response from each respondent provides sufficient indication that it is not subject to either de jure or de facto government control with respect to its exports of honey, each review will proceed. If, on the other hand, a respondent does not demonstrate its eligibility for a separate rate, then it will be deemed to be affiliated with other companies that exported during the POI and that it did not establish entitlement to a separate rate, and the review of that respondent will be rescinded.

Initiation of Review

In accordance with section 751(a)(2)(B)(ii) of the Act and 19 CFR 351.214(d)(1), we are initiating new shipper reviews of the antidumping duty order on honey from the PRC. Therefore, we intend to issue the preliminary results of these reviews not later than 180 days after the date on which the reviews are initiated. We intend to issue the final results of these reviews within 90 days after the date on which the preliminary results were issued.

Pursuant to 19 CFR 351.214(g)(1)(i)(B) of the Department's regulations, the period of review (''POR'') for a new shipper review initiated in the month immediately following the semiannual anniversary month will be the six-month period immediately preceding the semiannual anniversary month. Therefore, the POR for this new shipper review is:

Antidumping duty proceeding	Period to be reviewed
Chengdu-Dujiangyan Dubao Bee Industrial Co., Ltd.: ..	12/01/01 - 05/31/02
Wuhan Bee Healthy Co., Ltd..	

We will instruct the Customs Service to allow, at the option of the importer, the posting, until the completion of the review, of a single entry bond or security in lieu of a cash deposit for each entry of the merchandise exported by the above-listed companies. This action is in accordance with 19 CFR 351.214(e). Interested parties that need access to proprietary information in these new shipper reviews should submit applications for disclosure under administrative protective orders in accordance with 19 CFR 351.305 and 351.306. This initiation and notice are in accordance with section 751(a) of the Act (19 U.S.C. 1675(a)) and 19 CFR 351.214(d).

Dated: July 31, 2002.

Faryar Shirzad,

Assistant Secretary for Import Administration.

[FR Doc. 02–19825 Filed 8–5–02; 8:45 am]

BILLING CODE 3510–DS–S

DEPARTMENT OF COMMERCE

International Trade Administration

[A–507–502]

Certain In-Shell Raw Pistachios from Iran: Preliminary Results of Antidumping Duty New Shipper Review

AGENCY: Import Administration, International Trade Administration, Department of Commerce.

ACTION: Notice of Preliminary Results of Antidumping Duty New Shipper Review of Certain In-Shell Raw Pistachios from Iran.

SUMMARY: In response to a request from Tehran Negah Nima Trading Company, Inc., (Nima), the Department of Commerce (Department) is conducting a new shipper review of the antidumping duty order on certain in-shell raw pistachios from Iran. This new shipper review covers imports of subject merchandise from Nima. The period of review is July 1, 2000, through June 30, 2001. The Department preliminarily determines that Nima has made sales of subject merchandise to the United States below normal value. If these preliminary results are adopted in our final results of this new shipper review, we will instruct the U.S. Customs Service to liquidate entries during the period of review. The Department shall determine, and the Customs Service shall assess, antidumping duties on all appropriate entries. The Department will issue appraisement instructions directly to the Customs Service. Interested parties are invited to comment on these preliminary results. *See* Preliminary Results of the Review section, infra. Parties who submit comments are requested to submit with the argument: (1) a statement of the issues and (2) a brief summary of the arguments.

EFFECTIVE DATE: August 6, 2002.

FOR FURTHER INFORMATION CONTACT: Phyllis Hall or Donna Kinsella, Import Administration, International Trade Administration, U.S. Department of Commerce, 1401 Constitution Avenue, NW., Washington, DC 20230; telephone: 202–482–1398 or 202–482–0194, respectively.

SUPPLEMENTARY INFORMATION:

The Applicable Statute

Unless otherwise indicated, all citations to the statute are references to the provisions effective January 1, 1995, the effective date of the amendments made to the Tariff Act of 1930, as amended (the Act) by the Uruguay Round Agreements Act (URAA). In addition, unless otherwise indicated, all citations to the Department's regulations are references to the provisions codified at 19 CFR Part 351 (2001).

Background

On July 17, 1986, the Department published in the Federal Register a notice of the antidumping duty order on certain in-shell pistachios from Iran. *See* Antidumping Duty Order; Certain In-Shell Pistachios from Iran, 51 FR 25922 (July 17, 1986). On July 31, 2001, Tehran Negah Nima Trading Company, Inc., an exporter of subject merchandise during the period of review (POR), requested that the Department conduct a new shipper review of the antidumping duty order. We initiated the review on October 10, 2001 (66 FR 51638). On October 11, 2001, the Department issued the antidumping questionnaire. On November 15, 2001, the respondent submitted section A of the questionnaire. On December 10, 2001, the respondent submitted sections B-C of the questionnaire. On January 25, 2002, the Department issued the first supplemental questionnaire. On March 20, 2002, the Department issued a second supplemental questionnaire. On May 3, 2002, the Department issued a third supplemental questionnaire. On February 22, 2002, the respondent submitted its response to the first supplemental questionnaire. On April 4, 2002 and May 15, 2002, respondent submitted its responses to the second and third supplemental questionnaires. On May 3, 2002, the Department sought information from Fallah Pistachio. On May 6, 2002, the Department issued Section D of its questionnaire to Maghousdi Farm. On June 3, 2002, Fallah Pistachio submitted its response to the Department's request for information. On June 20, 2002, Maghousdi Farm submitted its response to Section D. Under section 751(a)(2)(B)(iv) of the Act, the Department may extend the deadline for completion of a new shipper review if it determines that the case is extraordinarily complicated. On April 2, 2002, the Department fully extended the time limit for the preliminary results of this new shipper review by 120 days until July 29, 2002. *See Certain In-Shell Raw Pistachios From Iran: Extension of Time Limit for Preliminary Results of Antidumping New Shipper Review*, 67 FR 15530 (April 2, 2002).

Period of Review

The POR is July 1, 2000, through June 30, 2001.

Scope of the Review

Imports covered by this review are raw, in-shell pistachio nuts from which the hulls have been removed, leaving the inner hard shells and edible meats, from Iran. The merchandise under review is currently classifiable under item 0802.50.20.00 of the *Harmonized Tariff Schedule of the United States* (HTSUS). Although the HTSUS subheadings are provided for convenience and customs purposes, our written description of the scope of this proceeding is dispositive.

Product Comparisons

In accordance with section 771(16) of the Act, we considered all products produced by the respondents covered by the description in the ''Scope Review'' section above and sold in the comparison market during the POR, to be foreign like products for purposes of determining appropriate product comparisons to U.S. sales. If there were no home market foreign like products to compare to a U.S. sale, we used constructed value (CV).

Export Price/Constructed Export Price

In accordance with section 772(a) of the Act, export price is the price at which the subject merchandise is first sold (or agreed to be sold) before the date of importation by the producer or exporter of the subject merchandise outside of the United States to an unaffiliated purchaser in the United States or to an unaffiliated purchaser for exportation to the United States. In accordance with section 772(b) of the Act, constructed export price is the price at which the subject merchandise is first sold (or agreed to be sold) in the United States before or after the date of importation by or for the account of the producer or exporter of such merchandise or by a seller affiliated with the producer or exporter, to a purchaser not affiliated with the producer or exporter. For purposes of this review, Nima classified its sales as EP sales. *See* Section C response, at 5. Nima identified one channel of distribution for its U.S. sales during the POR. *Id.* at 6. With respect to Nima's sale dated June 25, 2001, based on Nima's description of the sale, the Department preliminarily determines that the goods were sold directly to an unaffiliated purchaser in the United States and as such the transaction constitutes an EP sale. We calculated EP in accordance with section 772(a) of the Act. We based EP on the FOB price to the unaffiliated purchaser in the United States. We made deductions for freight charges (*i.e.*, foreign inland freight) to

the customer in accordance with section 772(c)(2)(A) of the Act.

With respect to Nima's sale dated January 25, 2001, the Department has preliminarily determined to exclude this sale for purposes of this new shipper review. According to information submitted by respondent on the record, this sale was not conducted by Tehran Negah Nima Trading Company, Inc.

Tehran Negah Nima Trading Company, Inc., trading as Nima Trading Company, the requester of this new shipper review, was incorporated and registered as a limited liability company in Iran on January 3, 2001. On February 10, 2001, the sole proprietor of Nima Trading Company, an entity established in November 2000, agreed to transfer all of his interest in Nima Trading Company and to allow Tehran Negah Nima Trading Company, Inc. to trade as ''Nima Trading Company.'' Evidence on the record indicates that the January 25, 2001, U.S. sale reported by Tehran Negah Nima Trading, Inc., was actually concluded by the former sole proprietorship of Nima Trading Company. As of the date of sale, January 25, 2001, the entity requesting this review, Tehran Negah Nima Trading, Inc., did not have the authority to trade as Nima Trading Company. As noted above, that authority was not granted until February 10, 2001.

Since Tehran Negah Nima Trading Company Inc., trading as Nima Trading Company, is the entity which requested the new shipper review, the Department has determined to limit this review to sales made by Tehran Negah Nima Trading Company, Inc. The Department does not have sufficient information available on the record to conduct a successorship analysis to determine whether Tehran Negah Nima Trading Company, Inc., is the successor to the sole proprietorship of Nima Trading Company. Referencing the January 25, 2001, U.S. sale, respondent stated on the record that it ''does not have any objection to have this sale removed from the file.'' *See* February 22, 2002 response at 8. The Department therefore has preliminary determined to exclude the January 25, 2001, sale by Nima Trading Company for purposes of this review.

Normal Value

A. Ordinary Course of Trade

In accordance with section 773(a)(1)(B)(i) of the Act, the normal value shall be the price at which the foreign like product is first sold (or, in the absence of a sales, offered for sale) for consumption in the exporting country, in the usual commercial quantities and in the ordinary course of trade and, to the extent practicable, at the same level of trade as the export price or constructed export price. Nima reported one sale of subject merchandise in the home market during the POR. *See* December 10, 2001, response at 10. Nima reported no sales of subject merchandise to any third country market. *See* November 15, 2001, response at 19. Regarding Nima's home market sale, Nima stated ''the sole purpose of establishing Nima...was to be able to exploit business opportunities in the US market for Iranian pistachios. Therefore, Nima's home market sale to Bakhshie was certainly a deviation from the company's main objective....'' Nima also stated that ''the sale of raw in-shell pistachios in the home market is not part of Nima's ordinary course of business.'' Furthermore, Nima stated that it ''does not have any plans for selling pistachios in the Iranian market in the future.'' *See* April 4, 2002, response at 7. Based on this information, the Department preliminarily finds that Nima's sale in the home market during the POR was not in the ordinary course of trade as defined in the statute and Departmental regulations.

Where sales of the foreign like product sold for consumption in the exporting country are determined not to be in ordinary course of trade, section 773(a)(1)(B)(ii) of the Act directs the Department to employ the price of sales to a third country as the basis for NV. However, as noted above, Nima reported no sales of subject merchandise to any third country markets during the POR. Section 773(a)(4) of the Act states that if the administering authority determines that the normal value of the subject merchandise cannot be determined under paragraph 773(a)(1)(B)(i), and there are no third country sales, the normal value of the subject merchandise may be based on the constructed value of that merchandise. Therefore, the Department determines that the use of constructed value in determining NV is appropriate in this review.

B. Normal Value Based on CV

In accordance with section 773(e)(1) of the Act, we calculated CV based on the COP plus the exporter's SG&A expenses and an amount for profit. For COP, we included the producer's cost of production and the middleman's operational costs. Because the exporter's G&A costs were not separately reported from its selling expenses, and were included as such, we did not include them again in calculating CV.

Because there are no viable home market sales or third country sales made by Nima during the POR, we cannot calculate CV profit under sections 773(e)(2)(A). Section 773(e)(2)(B)(iii) of the Act allows the Department to use amounts incurred and realized for profits, based on any other reasonable method as long as that profit does not exceed the amount normally realized by exporters or producers in connection with the sale, for consumption in the foreign country, of merchandise that is in the same general category of products as the subject merchandise. We based profit on the profit the middleman reported for the sale of subject merchandise to the exporter. We believe that the use of the middleman's profit meets the requirements of section 773(e)(2)(B)(iii) of the Act. First, the profit calculated is based on the middleman's sale of in-shell raw pistachios. Second, the sale took place in Iran. Third, the sale occurred during the POR. Thus, the profit rate is a profit realized in connection with the sale, for consumption in the foreign country, of subject merchandise. Finally, there is no evidence on the record that indicates this profit rate is aberrational or not representative of home market profit rates of subject merchandise. *See* Constructed Value Adjustments for Preliminary Determination, Memorandum from Gina K. Lee through Michael P. Martin to Neal M. Halper dated July 29, 2002. The Department is currently seeking additional information on CV and may adjust its CV calculation for the Final Results. If the CV calculation is substantially altered based on additional information, the Department will allow interested parties an opportunity to comment before the Final Results.

Date of Sale

Section 351.401(i) of the Department's regulations states that the Department will normally use the date of invoice, as recorded in the exporter's or producer's records kept in the ordinary course of business, as the date of sale, but may use a date other than the date of invoice if it better reflects the date on which the material terms of sale are established. Nima stated that, for the U.S. market, date of sale is based on invoice date. *See* February 22, 2002, response at 11. Therefore, the Department is using the date of invoice as the dale of sale.

Currency Conversion

According to the International Monetary Fund's 2001 Annual International Monetary Report, as of March 20, 2000, Iran had a dual exchange rate system. The two

officially-approved rates are:1) the effective Tehran Stock Exchange (TSE) which is applied to all transactions, except for 2) government imports of essential goods, and services of public and publicly guaranteed debt (the exchange rate for which is approximately 1750Rls/$US.) There is a separate TSE rate for ''oil exports'' and ''non-oil exports'', but both are within the first category of official exchange rates for private rather than public transactions.

The Department's preferred source for daily exchange rates is the Federal Reserve Bank. When the Federal Reserve Bank does not provide exchange rates for a certain currency, the Department's practice has been to use exchange rates obtained from the Dow Jones News/Retrieval Service. The Federal Reserve Bank does not provide exchange rates for the Iranian rial. Exchange rates for the Iranian rial published in the Dow Jones News/Retrieval Service appear to be official rates for public rather than private transactions and are not reflective of the actual exchange rates at which Nima converted foreign exchange earnings in the POR. Nima has documented on the record the dual exchange rate system in Iran, utilizing Iranian government reports and bank statements. The record shows clearly that the exchange rates Nima realized during the POR are dramatically different from the rates listed in the Dow Jones. For this reason and because there are no other appropriate exchange rates on the record, the Department used the actual exchange rates at which respondent converted its foreign exchange earnings during the POR.

Preliminary Results of Review

As a result of our review, we preliminarily determine that the following weighted-average dumping margin exists for the period July1, 2000, through June 30, 2001:

Company	Weighted-Average Margin
Nima Trading Company (Nima)	120.04 percent

In accordance with 19 CFR 351.224(b), the Department will disclose to parties to this proceeding the calculations performed in connection with these preliminary results within five days of the date of publication of this notice.

Pursuant to 19 CFR 351.309, interested parties may submit written comments on these preliminary results. Case briefs must be submitted no later than 30 days after the date of publication of this notice. Rebuttal briefs, which must be limited to issues raised in the case briefs, must be submitted no later than five days after the time limit for filing case briefs. Parties submitting arguments in this proceeding are requested to submit with the argument: (1) a statement of the issue, and (2) a brief summary of the argument. Case and rebuttal briefs must be served on interested parties in accordance with 19 CFR 351.303(f). Also, within 30 days of the date of publication of this notice, an interested party may request a public hearing on arguments to be raised in the case and rebuttal briefs. See 19 CFR 351.310(c). Unless the Secretary specifies otherwise, the hearing, if requested, will be held two days after the date for submission of rebuttal briefs, or the first working day thereafter. The Department will issue the final results of this new shipper review, including the results of its analysis of issues raised in any case or rebuttal brief, within 90 days of these preliminary results.

Assessment

The Department shall determine, and the U.S. Customs Service (Customs) shall assess, antidumping duties on all appropriate entries. In accordance with 19 CFR 351.212(b), we have calculated exporter/importer-specific assessment rates. We calculated importer-specific duty assessment rates on a unit value per kilogram basis and then dividing this sum by the entered value for that sale. If these preliminary results are adopted in our final results, we will instruct Customs to assess antidumping duties on the merchandise subject to review. Upon completion of this review, the Department will issue appraisement instructions directly to Customs.

The Department is currently conducting a new shipper review of the countervailing duty order on raw in-shell pistachios from Iran involving Nima. The Department will adjust both the antidumping duty assessment rate and cash deposit rate resulting from this review for any duties imposed to offset export subsidies found at the conclusion of the countervailing new shipper review.

Cash Deposit

The following cash deposit requirements will be effective upon publication of the final results of this new shipper review for all shipments of the subject merchandise entered, or withdrawn from warehouse, for consumption on or after the publication date of the final results of this new shipper review, as provided by section 751(a)(1) of the Act: (1) The cash deposit rate for the reviewed company will be the rate established in the final results of this new shipper review (except that no deposit will be required if the rate is zero or de minimis, *i.e.*, less than 0.5 percent); (2) for previously investigated companies not listed above, the cash deposit rate will continue to be the company-specific rate published for the most recent period; (3) if the exporter is not a firm covered in this review or the original LTFV investigation, but the manufacturer is, the cash deposit rate will be the rate established for the most recent period for the manufacturer of the merchandise; and (4) if neither the exporter nor the manufacturer is a firm covered in this review or the original LTFV investigation, the cash deposit rate will continue to be the ''all others'' rate of 184.28 percent established in the LTFV investigation. This rate reflects the amount of export subsidies found in the final countervailing duty determination in the investigation subtracted from the dumping margin found in the less than fair value determination. *See* 51 FR 8344. These deposit requirements, when imposed, shall remain in effect until publication of the final results of the next review.

Notification to Interested Parties

This notice also serves as a preliminary reminder to importers of their responsibility under 19 CFR 351.402(f)(2) to file a certificate regarding the reimbursement of antidumping duties prior to liquidation of the relevant entries during this review period. Failure to comply with this requirement could result in the Secretary's presumption that reimbursement of antidumping duties occurred and the subsequent assessment of double antidumping duties. This new shipper review and notice are issued and published in accordance with sections 751(a)(2)(B) and 777(i)(1) of the Act.

Dated: July 29, 2002.

Faryar Shirzad,

Assistant Secretary for Import Administration.

[FR Doc. 02–19824 Filed 8–5–02; 8:45 am]

BILLING CODE 3510–DS–S

DEPARTMENT OF COMMERCE

International Trade Administration

[A–570–875]

Non-Malleable Cast Iron Pipe Fittings from the People's Republic of China: Postponement of Preliminary Determination of Antidumping Duty Investigation

AGENCY: Import Administration, International Trade Administration, Department of Commerce.

EFFECTIVE DATE: August 6, 2002.

FOR FURTHER INFORMATION CONTACT: Ronald Trentham or Sam Zengotitabengoa at (202) 482–6320 or (202) 482–4195, respectively; AD/CVD Enforcement, Office 4, Group II, Import Administration, Room 1870, International Trade Administration, U.S. Department of Commerce, 14th Street and Constitution Avenue, NW, Washington, DC 20230.

SUPPLEMENTARY INFORMATION:

Applicable Statute and Regulations

Unless otherwise indicated, all citations to the Tariff Act of 1930, as amended (the Act), are references to the provisions effective January 1, 1995, the effective date of the Uruguay Round Agreements Act. In addition, unless otherwise indicated, all citations to the Department's regulations are to the regulations at 19 CFR part 351 (2002).

Statutory Time Limits

Section 733(b)(1)(A) of the Act, requires the Department of Commerce (the Department) to issue the preliminary determination of an antidumping duty investigation within 140 days after the date of initiation. However, if the petitioner makes a timely request for an extension of the period, section 733(c)(1)(A) of the Act allows the Department to postpone the preliminary determination until not later than 190 days after the date of initiation.

Background

On March 13, 2002, the Department initiated an antidumping duty investigation of non-malleable cast iron pipe fittings from the People's Republic of China. *See Notice of Initiation of Antidumping Investigation*: Non-malleable Cast Iron Pipe Fittings from the People's Republic of China, 67 FR 12966 (March 20, 2002). The notice stated that the Department would issue its preliminary determination no later than 140 days after the date of initiation. The preliminary determination currently is due no later than July 31, 2002.

Extension of Preliminary Determination

On July 5, 2002, the Department received a timely request for postponement of the preliminary determination from Anvil International Inc. and Ward Manufacturing Inc., (hereinafter, the petitioners), in accordance with section 733(c)(1)(A) of the Act and 19 CFR 351.205(e). Petitioners requested an extension to provide themselves and the Department with more time to review respondents' submissions and to allow the Department to request and analyze additional information from respondents, if needed. There are no compelling reasons for the Department to deny the petitioners' request. Therefore, pursuant to section 733(c)(1)(A) of the Act, the Department is postponing the preliminary determination until September 19, 2002.

This notice of postponement is in accordance with section 733(c)(2) of the Act and 19 CFR 351.205(f).

Dated: July 11, 2002.

Faryar Shirzad,

Assistant Secretary for Import Administration.

[FR Doc. 02–19820 Filed 8–5–02; 8:45 am]

BILLING CODE 3510–DS–S

DEPARTMENT OF COMMERCE

International Trade Administration

[A–570–847]

Persulfates From the People's Republic of China: Preliminary Results of Antidumping Duty Administrative Review and Notice of Partial Recission

AGENCY: Import Administration, International Trade Administration, Department of Commerce.

SUMMARY: The Department of Commerce is conducting an administrative review of the antidumping duty order on persulfates from the People's Republic of China in response to a request by the petitioner, FMC Corporation. The period of review is July 1, 2000, through June 30, 2001. In addition, we are rescinding our initiation of an administrative review for an additional exporter because no review was requested for this company.

We have preliminarily determined that U.S. sales have not been made below normal value. If these preliminary results are adopted in our final results, we will instruct the U.S. Customs Service to assess no antidumping duties on the exports subject to this review.

EFFECTIVE DATE: August 6, 2002.

FOR FURTHER INFORMATION CONTACT: Mike Strollo, AD/CVD Enforcement, Group I, Office 2, Import Administration, International Trade Administration, U.S. Department of Commerce, 14th Street and Constitution Avenue, NW., Washington, DC 20230; telephone: (202) 482–0629.

Applicable Statute and Regulations: Unless otherwise indicated, all citations to the Tariff Act of 1930, as amended (the Act), are references to the provisions effective January 1, 1995, the effective date of the amendments made to the Act by the Uruguay Round Agreements Act (URAA). In addition, unless otherwise indicated, all citations to the Department of Commerce's (the Department's) regulations are to 19 CFR part 351 (2001).

SUPPLEMENTARY INFORMATION:

Background

On July 2, 2001, the Department published in the **Federal Register** a notice of ''Opportunity to Request an Administrative Review'' of the antidumping duty order on persulfates from the People's Republic of China (PRC) covering the period July 1, 2000, through June 30, 2001. *See Antidumping or Countervailing Duty Order, Finding, or Suspended Investigation; Opportunity to Request Administrative Review*, 66 FR 34910 (July 2, 2001).

On July 31, 2001, in accordance with 19 CFR 351.213(b), the petitioner, FMC Corporation, requested an administrative review of Shanghai Ai Jian Import & Export Corporation (Ai Jian). We published a notice of initiation of this review on August 20, 2001. *See Initiation of Antidumping and Countervailing Duty Administrative Reviews and Requests for Revocation in Part*, 66 FR 43570 (Aug. 20, 2001) (*Persulfates Initiation*). In this notice, we also initiated an administrative review for an additional company for which no review had been requested by any interested party. For further discussion, *see* the ''Partial Recission of Review'' section of this notice, below.

On August 3, 2001, we issued an antidumping questionnaire to Ai Jian. We received Ai Jian's timely responses to section A of the questionnaire on September 24, 2001, and to sections C and D on October 9, 2001. We issued a supplemental questionnaire to Ai Jian on October 29, 2001. We received Ai Jian's response to this supplemental questionnaire on November 29, 2001.

On November 30, 2001, Ai Jian and the petitioner submitted publicly available information for consideration in valuing the factors of production. On

December 7, 2001, the parties submitted rebuttal comments.

On February 15, 2002, we issued an additional supplemental questionnaire to Ai Jian. Ai Jian submitted a response to this supplemental questionnaire on March 7, 2002.

In June 2002, we conducted verification of the sales and factor information provided by Ai Jian.

Partial Recission of Review

In *Persulfates Initiation,* we inadvertently initiated an administrative review for Sinochem Jiangsu Wuxi Import and Export Corp. (Wuxi). However, no administrative review for this exporter had been requested by any interested party in this proceeding. Therefore, in accordance with 19 CFR 351.213(d)(2), we have rescinded this administrative review with respect to Wuxi.

Scope of Review

The products covered by this review are persulfates, including ammonium, potassium, and sodium persulfates. The chemical formula for these persulfates are, respectively, $(NH_4)_2S_2O_8$, $K_2S_2O_8$, and $Na_2S_2O_8$. Ammonium and potassium persulfates are currently classifiable under subheading 2833.40.60 of the *Harmonized Tariff Schedule of the United States* (HTSUS). Sodium persulfate is classifiable under HTSUS subheading 2833.40.20. Although the HTSUS subheadings are provided for convenience and customs purposes, the written description of the scope of this review is dispositive.

Separate Rates

It is the Department's policy to assign all exporters of the merchandise subject to review in non-market-economy (NME) countries a single rate, unless an exporter can demonstrate an absence of government control, both in law and in fact, with respect to exports. To establish whether an exporter is sufficiently independent of government control to be entitled to a separate rate, the Department analyzes the exporter in light of the criteria established in the *Final Determination of Sales at Less Than Fair Value: Sparklers from the People's Republic of China,* 56 FR 20588 (May 6, 1991) (*Sparklers*), as amplified in the *Final Determination of Sales at Less Than Fair Value: Silicon Carbide from the People's Republic of China,* 59 FR 22585 (May 2, 1994) (*Silicon Carbide*). Evidence supporting, though not requiring, a finding of de jure absence of government control over export activities includes: (1) An absence of restrictive stipulations associated with an individual exporter's business and export licenses; (2) any legislative enactments decentralizing control of companies; and (3) any other formal measures by the government decentralizing control of companies. With respect to evidence of a de facto absence of government control, the Department considers the following four factors: (1) Whether the respondent sets its own export prices independently from the government and other exporters; (2) whether the respondent can retain the proceeds from its export sales; (3) whether the respondent has the authority to negotiate and sign contracts; and (4) whether the respondent has autonomy from the government regarding the selection of management. *See Silicon Carbide*, 59 FR at 22587; *see also Sparklers,* 56 FR at 20589.

With respect to Ai Jian, for purposes of our preliminary results covering the period of review (POR) July 1, 2000, through June 30, 2001, the Department determined that there was an absence of *de jure* and *de facto* government control of its export activities and determined that it warranted a company-specific dumping margin. *See Persulfates From the People's Republic of China: Final Results of Antidumping Duty Administrative Review,* 66 FR 42628 (Aug. 14, 2001) (*Persulfates Third Review Final*). For purposes of this POR, Ai Jian has responded to the Department's request for information regarding separate rates. We have found that the evidence on the record is consistent with the final results in *Persulfates Third Review Final* and continues to demonstrate an absence of government control, both in law and in fact, with respect to Ai Jian's exports, in accordance with the criteria identified in *Sparklers* and *Silicon Carbide.*

Export Price

For Ai Jian, we calculated export price (EP) in accordance with section 772(a) of the Act, because the subject merchandise was sold directly to the first unaffiliated purchaser in the United States prior to importation and constructed export price methodology was not otherwise warranted based on the facts of record. We calculated EP based on packed, cost-insurance-freight (CIF) U.S.-port, or free-on-board, PRC-port prices to unaffiliated purchasers in the United States, as appropriate. We made deductions from the starting price, where appropriate, for ocean freight services which were provided by market economy suppliers. We also deducted from the starting price, where appropriate, an amount for foreign inland freight, foreign brokerage and handling, and marine insurance expenses. As these movement services were provided by NME suppliers, we valued them using Indian rates. For further discussion of our use of surrogate data in an NME proceeding, as well as selection of India as the appropriate surrogate country, see the ''Normal Value'' section of this notice, below.

For foreign inland freight we used price quotes obtained by the Department from Indian truck freight companies in November 1999. These price quotes were used in *Persulfates Third Review Final,* and were also used in the investigation of bulk aspirin from the PRC. *See Notice of Preliminary Determination of Sales at Less Than Fair Value: Bulk Aspirin From the People's Republic of China,* 65 FR 116, 118 (Jan. 3, 2000) (*Bulk Aspirin Prelim*). For foreign brokerage and handling expenses, we used public information reported in the new shipper review of stainless steel wire rod from India. *See Certain Stainless Steel Wire Rod From India; Preliminary Results of Antidumping Duty Administrative and New Shipper Reviews,* 63 FR 48184, 48185 (Sept. 9, 1998). With respect to marine insurance, Ai Jian asserted that it used a market-economy supplier for its shipments of persulfates. However, based on the submitted information, we could not establish that the insurance charges Ai Jian paid reflect prices set by market-economy carriers. Due to the proprietary nature of the facts underlying our analysis, we cannot discuss them in this forum. For further discussion, see the July 31, 2002, memorandum from the team to the file entitled ''U.S. Price and Factors of Production Adjustments for the Preliminary Results.'' Therefore, in accordance with our practice, we based the marine insurance charges on surrogate values. *See, e.g., Persulfates from the People's Republic of China: Preliminary Results of Antidumping Duty Administrative Review,* 66 FR 18439, 18441 (*Persulfates Third Review Prelim*); *Notice of Final Determination of Sales at Less Than Fair Value: Certain Non-Frozen Apple Juice Concentrate from the People's Republic of China,* 65 FR 19873 (Apr. 13, 2000) and accompanying decision memorandum at *Comment 3*; and *Sebacic Acid From the People's Republic of China: Final Results of Antidumping Duty Administrative Review,* 65 FR 49537 (Aug. 14, 2000) and accompanying decision memorandum at *Comment 8.*

Accordingly, we valued marine insurance using price quotes obtained from Roanoke Trade Services, Inc., a provider of marine insurance. *See* the

memorandum to the File from Gregory Kalbaugh entitled ''Marine Insurance Rates,'' in the administrative review of sebacic acid from the PRC, dated July 9, 2002, and the memorandum to the File from Michael Strollo entitled ''Preliminary Valuation of Factors of Production for the Preliminary Results of the 2000–2001 Administrative Review of Persulfates from the People's Republic of China,'' dated July 31, 2002 (*FOP Memo*), which are on file in the Central Records Unit, Room B099 of the main Commerce building (CRU).

Normal Value

Section 773(c)(1) of the Act provides that the Department shall determine the normal value (NV) using a factors-of-production methodology if: (1) The merchandise is exported from an NME country; and (2) the information does not permit the calculation of NV using home-market prices, third-country prices, or constructed value (CV) under section 773(a) of the Act.

The Department has treated the PRC as an NME country in all previous antidumping cases. Furthermore, available information does not permit the calculation of NV using home market prices, third country prices, or CV under section 773(a) of the Act. In accordance with section 771(18)(C)(i) of the Act, any determination that a foreign country is an NME country shall remain in effect until revoked by the administering authority. None of the parties to this proceeding has contested such treatment in this review. Therefore, we treated the PRC as an NME country for purposes of this review and calculated NV by valuing the factors of production in a surrogate country.

Section 773(c)(4) of the Act and 19 CFR 351.408 direct us to select a surrogate country that is at a level of economic development comparable to that of the PRC. On the basis of per capita gross domestic product (GDP), the growth rate in per capita GDP, and the national distribution of labor, we find that India is at a level of economic development comparable to that of the PRC. [1] *See* the Surrogate Country Selection Memorandum from Jeffrey May to Luis Apple Re: Administrative Review of Persulfates from the People's Republic of China, dated September 24, 2001, which is on file in the CRU.

Section 773(c)(4) of the Act also requires that, to the extent possible, the Department use a surrogate country that is a significant producer of merchandise comparable to persulfates. For purposes of the most recent segment of this proceeding, we found that India was a producer of persulfates based on information submitted by the respondent. *See Persulfates Third Review Prelim,* 66 FR at 18442.[2] For purposes of this administrative review, we continue to find that India is a significant producer of persulfates based on information submitted by both the respondent and the petitioner. We find that India fulfills both statutory requirements for use as the surrogate country and continue to use India as the surrogate country in this administrative review. We have used publicly available information relating to India, unless otherwise noted, to value the various factors of production.

For purposes of calculating NV, we valued PRC factors of production in accordance with section 773(c)(1) of the Act. Factors of production include, but are not limited to: (1) Hours of labor required; (2) quantities of raw materials employed; (3) amounts of energy and other utilities consumed; and (4) representative capital cost, including depreciation. In examining surrogate values, we selected, where possible, the publicly available value which was'' (1) An average non-export value; (2) representative of a range of prices within the POR or most contemporaneous with the POR; (3) product-specific; and (4) tax-exclusive. For a more detailed explanation of the methodology used in calculating various surrogate values, see the *FOP Memo*, which is on file in the CRU. In accordance with this methodology, we valued the factors of production as follows:

To value ammonium sulfate, caustic soda, and sulfuric acid, we used public information from the Indian publication *Chemical Weekly,* as provided by both petitioner and the respondent in their November 30, 2001, submissions. For caustic soda and sulfuric acid, because price quotes reported in *Chemical Weekly* are for chemicals with a 100 percent concentration level, we made chemical purity adjustments according to the particular concentration levels of caustic soda and sulfuric acid used by Shanghai Ai Jian Reagent Works (AJ Works), Ai Jian's PRC supplier. Where necessary, we adjusted the values reported in *Chemical Weekly* to exclude sales and excise taxes. For potassium sulfate and an hydrous ammonia, we relied on import prices contained in the January 2001 issue of *Monthly Statistics of the Foreign Trade of India* (*Monthly Statistics*), as provided by the respondent in its November 2001 submission. For those values not contemporaneous with the POR, we adjusted for inflation using the WPI published by the IMF.

During the POR, AJ Works self-produced ammonium persulfates, which is a material input in the production of potassium persulfates and sodium persulfates. In order to value ammonium persulfates, we calculated the sum of the materials, labor, and energy costs based on the usage factors submitted by AJ Works in its questionnaire responses. Consistent with our methodology used in *Persulfates Third Review Final,* we then applied this value to the reported consumption amounts of ammonium persulfates used in the production of potassium and sodium persulfates.

We valued labor based on a regression-based wage rate, in accordance with 19 CFR 351.408(c)(3).

For electricity, we derived a surrogate value based on 1998/1999 electricity price data published by Data Energy Research Institute. These data were used in the antidumping duty administrative review of manganese metal from the PRC. *See Persulfates Third Review Final;* and *Notice of Final Results of Antidumping Duty Administrative Review of Manganese Metal from the People's Republic of China,* 66 FR 15076 (Mar. 15, 2001) and accompanying decision memorandum at *Comment 10.* We adjusted the values to reflect inflation up to the POR using the electricity-specific price index published by the Reserve Bank of India.

To value water, we relied on public information reported in the October 1997 publication of *Second Water Utilities Data Book: Asian and Pacific Region.* To value coal, we relied on import prices contained in the March 2001 annual volume of *Monthly Statistics.* We adjusted the values to reflect inflation up to the POR using the WPI published by the IMF.

For the reported packing materials—polyethylene bags, woven bags, polyethylene sheet/film and liner, fiberboard, and paper bags—we relied upon Indian import data from the March 2001 annual volume of *Monthly Statistics.* For wood pallets, we relied upon Indonesian import data from the 1998 issues of *Indonesian Foreign Trade Statistics,* because the submitted Indian data on this material were unreliable as a surrogate value. *See* the *FOP Memo* at page 5. The data for wood pallets was submitted by the respondent in its November 30, 2001, submission, and used in the previous administrative review of *See Persulfates Third Review*

[1] We also find that Indonesia is at a level of economic development comparable to that of the PRC.

[2] This finding was unchanged in the final results.*See Persulfates Third Review Final.*

Final. We adjusted the Indian rupee values to reflect inflation up to the POR using the WPI published by the IMF. We also adjusted the U.S. dollar value for wood pallets to reflect inflation (or deflation, as appropriate) using the producer price indices published by the IMF.

We made adjustments to account for freight costs between the suppliers and AJ Works' manufacturing facilities for each of the factors of production identified above. In accordance with out practice, for inputs for which we used CIF import values from India or Indonesia, we calculated a surrogate freight cost using the shorter of the reported distances either from the closet PRC ocean port to the factory or from the domestic supplier to the factory. *See Final Determination of Sales at Less Than Fair Value: Certain Cut-to-Length Carbon Steel Plate From the People's Republic of China,* 62 FR 61964, 61977 (Nov. 20, 1997) and the Court of Appeals for the Federal Circuit's decision in *Sigma Corp.* v. *United States.* 7 F.3d 1401 (Fed. Cir. 1997).

For foreign inland freight we used price quotes obtained by the Department from Indian truck freight companies in November 1999. These price quotes were used in *Persulfates Third Review Final,* and were also used in *Bulk Aspirin Prelim. See* the *FOP Memo.*

For factory overhead, selling, general, and administrative expenses (SG&A), and profit, we relied on the experience of two producers of identical merchandise, Gugarat Persalts (P) Lts. (Gujarat) and Calibre Chemicals Pvt., Ltd. (Calibre), as reflected in their fiscal year 2000 financial statements. *See* the *FOP Memo.* Consistent with our practice, we did not rely on the financial statements of an additional producer of comparable merchandise (*i.e.,* National Peroxide Ltd.) because it did not produce persulfates during the POR. *See Persulfates Third Review Final* and accompanying decision memorandum at *Comment 5.*

We note that the financial statements of Gujarat and Calibre indicate that both produce persulfates and both are equally contemporaneous (*i.e.,* these financial statements cover the fiscal period April 1999 through March 2000). We disagree with the petitioner's argument that Gujarat's financial statements are not publicly available because Gujarat is not a public corporation. Gujarat's financial statements were submitted as public information. In addition, we note that these statements were audited. Therefore, for these preliminary results, we have relied upon the financial statements of both Gujarat and Calibre in order to calculate the surrogate factory overhead, SG&A, and profit ratios.

Consistent with the methodology used in *Persulfates Third Review Final,* we calculated factory overhead as a percentage of the total raw material costs for subject merchandise, as opposed to calculating factory overhead as a percentage of total materials, labor, and energy costs for all products. *See* the *FOP Memo* at page 7. We also reclassified certain depreciation expenses from Calibre's financial statements as SG&A expenses. We removed from the profit calculation the excise duties and sales taxes.

Preliminary Results of Review

We preliminarily determine that the following margins exist for the period July 1, 2000, through June 30, 2001:

Manufacturer/exporter	Margin (percent)
Shanghai Ai Jian Import & Export Corporation	0.00

The Department will disclose to parties the calculations performed in connection with these preliminary results within five days of the date of publication of this notice. Interested parties may request a hearing within 30 days of the publication. Any hearing, if requested, will be held 44 days after the publication of this notice, or the first workday thereafter. Interested parties may submit case briefs not later than 30 days after the date of publication of this notice. Rebuttal briefs, limited to issues raised in the case briefs, may be filed not later than 35 days after the date of publication of this notice. The Department will publish a notice of the final results of this administrative review, which will include the results of its analysis of issues raised in any such written briefs, within 120 days of the publication of these preliminary results.

The Department will determine and the Customs Service shall assess antidumping duties on all appropriate entries. The Department will issue appropriate appraisement instructions directly to the Customs Service upon completion of this review. The final results of this review will be the basis for the assessment of antidumping duties on entries of merchandise covered by this review and for future deposits of estimated duties.

For assessment purposes in this case, we do not have the information to calculate entered value. Therefore, we have calculated importer-specific duty assessment rates for the merchandise by aggregating the dumping margins calculated for all U.S. sales and dividing this amount by the total quantity of those sales. To determine whether the duty assessment rates were *de minimis,* in accordance with the requirement set forth in 19 CFR 351.106(c)(2), we calculated importer-specific *ad valorem* ratios based on the EPs.

Furthermore, the following deposit requirements will be effective upon publication of the final results of this administrative review for all shipments of the subject merchandise entered, or withdrawn from warehouse, for consumption on or after the publication date, as provided by section 751(a)(1) of the Act: (1) The cash deposit rate for Ai Jian will be that established in the final results of this administrative review; (2) for any company previously found to be entitled to a separate rate and for which no review was requested, the cash deposit rate will be the rate established in the most recent review of that company; (3) the cash deposit rate for all other PRC exporters will be 119.02 percent, the PRC-wide rate established in the less than fair value investigation; and (4) the cash deposit rate for a non-PRC exporter of subject merchandise from the PRC will be the rate applicable to the PRC supplier of that exporter. These requirements, when imposed, shall remain in effect until publication of the final results of the next administrative review.

Notification of Interested Parties

This notice serves as a preliminary reminder to importers of their responsibility under 19 CFR 351.402(f) to file a certificate regarding the reimbursement of antidumping duties prior to liquidation of the relevant entries during this review period. Failure to comply with this requirement could result in the Department's presumption that reimbursement of antidumping duties occurred and the subsequent assessment of double antidumping duties.

This administrative review is issued and published in accordance with sections 751(a)(1) and 777(i)(1) of the Act.

Dated: July 31, 2002.

Faryar Shirzad,

Assistant Secretary , Import Administration.

[FR Doc. 02–19827 Filed 8–5–02; 8:45 am]

BILLING CODE 3510–DS–P

DEPARTMENT OF COMMERCE

International Trade Administration

[A–570–825]

Sebacic Acid From the People's Republic of China: Preliminary Results of Antidumping Duty Administrative Review and Notice of Intent Not To Revoke

AGENCY: Import Administration, International Trade Administration, Department of Commerce.

SUMMARY: The Department of Commerce is conducting an administrative review of the antidumping duty order on sebacic acid from the People's Republic of China in response to a request by CasChem Inc., a domestic producer of the subject merchandise, and requests by Sinochem Tianjin Import & Export Corporation and Guangdong Chemicals Import & Export Corp., exporters of the subject merchandise. The period of review is July 1, 2000, through June 30, 2001. We have preliminarily found that sales of subject merchandise have been made below normal value for the respondents. If these preliminary results are adopted in our final results of administrative review, we will instruct the Customs Service to assess antidumping duties on entries subject to this review by these exporters.

EFFECTIVE DATE: August 6, 2002.

FOR FURTHER INFORMATION CONTACT: Mike Strollo, AD/CVD Enforcement, Group I, Office 2, Import Administration, International Trade Administration, U.S. Department of Commerce, 14th Street and Constitution Avenue, NW., Washington, DC 20230; telephone: (202) 482–0629.

Applicable Statute and Regulations: Unless otherwise indicated, all citations to the Tariff Act of 1930, as amended (the Act), are references to the provisions effective January 1, 1995, the effective date of the amendments made to the Act by the Uruguay Round Agreements Act (URAA). In addition, unless otherwise indicated, all citations to the Department of Commerce's regulations are to 19 CFR part 351 (2001).

SUPPLEMENTARY INFORMATION:

Background

On July 2, 2001, the Department of Commerce (the Department) published in the **Federal Register** a notice of ''Opportunity to Request an Administrative Review'' of the antidumping duty order on sebacic acid from the People's Republic of China (PRC) covering the period July 1, 2000, through June 30, 2001. *See Antidumping or Countervailing Duty Order, Finding, or Suspended Investigation; Opportunity to Request Administrative Review,* 66 FR 34910 (July 2, 2001).

On July 27, 2001, in accordance with 19 CFR 351.213(b)(2), Guangdong Chemicals Import & Export Corp. (Guangdong) and Sinochem Tianjin Import & Export Corporation (Tianjin), exporters of the subject merchandise, requested an administrative review. On July 31, 2001, in accordance with 19 CFR 351.213(b)(1), CasChem Inc., a U.S. producer of sebacic acid, requested an administrative review of Tianjin and one additional exporter, Sinochem International Chemicals Corp. (Sinochem International).

On July 31, 2001, in accordance with 19 CFR 351.214, Hengshui Dongfeng Chemicals Import & Export Co., Ltd. (Hengshui), a foreign producer of the subject merchandise, requested a new shipper review. On August 9, 2001, Hengshui withdrew this request.

On August 20, 2001, we published a notice of initiation of this administrative review, and we issued antidumping questionnaires to Guangdong, Sinochem International, and Tianjin. *See Initiation of Antidumping and Countervailing Duty Administrative Reviews and Requests for Revocation in Part,* 66 FR 43570 (Aug. 20, 2001).

On October 1, 2001, we received timely responses to sections A, C and D of the questionnaires from Guangdong and Tianjin. Sinochem International did not respond to our request for information. Accordingly, the Department has based the margin for Sinochem International on facts available for purposes of these preliminary results pursuant to section 776 of the Act and 19 CFR 351.308. For further discussion, see the ''Use of Facts Available for Non-Responding Companies'' section of this notice.

On October 3, 2001, the Department invited interested parties to submit publicly available information for consideration in valuing the factors of production. On June 24, 2002, Guangdong and Tianjin submitted data from the *Economic Times of Bombay* newspaper for consideration in valuing castor oil and castor seeds.

We issued supplemental questionnaires to Guangdong and Tianjin in February 2002. We received responses to these supplemental questionnaires in March 2002.

In June 2002, we verified the information submitted by Guangdong and Tianjin.

Scope of Review

The products covered by this review are all grades of sebacic acid, a dicarboxylic acid with the formula $(CH2)_8(COOH)_2$, which include but are not limited to CP Grade (500ppm maximum ash, 25 maximum APHA color), Purified Grade (1000ppm maximum ash, 50 maximum APHA color), and Nylon Grade (500ppm maximum ash, 70 maximum ICV color). The principal difference between the grades is the quantity of ash and color. Sebacic acid contains a minimum of 85 percent dibasic acids of which the predominant species is the C_{10} dibasic acid. Sebacic acid is sold generally as a free-flowing powder/flake. Sebacic acid has numerous industrial uses, including the production of nylon 6/10 (a polymer used for paintbrush and toothbrush bristles and paper machine felts), plasticizers, esters, automotive coolants, polyamides, polyester castings and films, inks and adhesives, lubricants, and polyurethane castings and coatings. Sebacic acid is currently classifiable under subheading 2917.13.00.30 of the *Harmonized Tariff Schedule of the United States* (HTSUS). Although the HTSUS subheading is provided for convenience and customs purposes, the written description of the scope of this proceeding is dispositive.

Notice of Intent Not To Revoke in Part

In its request dated July 27, 2001, Tianjin requested that the Department revoke the antidumping order on sebacic acid with respect to its sales of subject merchandise. Section 351.222(b)(2) of the Department's regulations notes that the Secretary may revoke an antidumping order in part if the Secretary concludes, *inter alia,* that one or more exporters or producers covered by the order have sold the merchandise at not less than normal value (NV) for a period of at least three consecutive years. Thus, in determining whether a requesting party is entitled to a revocation inquiry, the Department must determine that the party received zero or *de minimis* margins for the three years forming the basis for the revocation request. *See Notice of Final Results of Antidumping Duty Administrative Review and Determination Not to Revoke the Antidumping Duty Order: Brass Sheet and Strip From the Netherlands,* 65 FR 742, 743 (Jan. 6, 2000).

Tianjin's request was accompanied by a certification that it had not sold the subject merchandise at less than NV during the current period of review (POR) and would not do so in the future. Tianjin further certified that they

sold the subject merchandise to the United States in commercial quantities for a period of at least three consecutive years. The company also agreed to immediate reinstatement of the antidumping duty order, as long as any exporter or producer is subject to the order, if the Department concludes that, subsequent to the revocation, Tianjin sold the subject merchandise at less than NV.

In this administrative review, we preliminarily find that, as indicated below, a margin of greater than 0.5 percent exists for Tianjin. As such, we preliminarily find that Tianjin does not qualify for revocation.

Separate Rates

It is the Department's policy to assign all exporters of the merchandise subject to review in non-market-economy (NME) countries a single rate, unless an exporter can demonstrate an absence of government control, both in law and in fact, with respect to its exports to the United States. To establish whether an exporter is sufficiently independent of government control to be entitled to a separate rate, the Department analyzes the exporter in light of the criteria established in the *Final Determination of Sales at Less Than Fair Value: Sparklers from the People's Republic of China,* 56 FR 20588 (May 6, 1991) (*Sparklers*), as amplified by *Final Determination of Sales at Less Than Fair Value: Silicon Carbide from the People's Republic of China,* 59 FR 22585 (May 2, 1994) (*Silicon Carbide*). Evidence supporting, though not requiring, a finding of *de jure* absence of government control over export activities includes: (1) An absence of restrictive stipulations associated with an individual exporter's business and export licenses; (2) any legislative enactments decentralizing control of companies; and (3) any other formal measures by the government decentralizing control of companies. With respect to evidence of a *de facto* absence of government control, the Department considers the following four factors: (1) Whether the respondent sets its own export prices independently from the government and other exporters; (2) whether the respondent can retain the proceeds from its export sales; (3) whether the respondent has the authority to negotiate and sign contracts; and (4) whether the respondent has autonomy from the government regarding the selection of management. *See Silicon Carbide,* 59 FR at 22587; *see also Sparklers,* 56 FR at 20589.

With respect to Guangdong and Tianjin, in our final results for the most recently completed review period (*i.e.,* July 1, 1998, through June 30, 1999), the Department determined there was both *de jure* and *de facto* absence of government control of each company's export activities and determined that each company warranted a company-specific dumping margin. *See Sebacic Acid from the People's Republic of China: Final Results of Antidumping Duty Administrative Review,* 65 FR 49537, 49538 (Aug. 14, 2000) (*Sebacic Acid Fifth Review*). For this review, both Guangdong and Tianjin have responded to the Department's request for information regarding separate rates. We have found that the evidence on the record is consistent with the final results in the *Sebacic Acid Fifth Review* and continues to demonstrate an absence of both *de jure* and *de facto* government control with respect to their exports in accordance with the criteria identified in *Sparklers* and *Silicon Carbide.*

With respect to Sinochem International, which did not respond to the Department's questionnaire, we preliminarily determine that this company does not merit a separate rate. The Department assigns a single rate to companies in a non-market economy, unless an exporter demonstrates an absence of government control. We preliminarily determine that Sinochem International is subject to the country-wide rate for this review because it failed to demonstrate an absence of government control.

Use of Facts Available for Non-Responding Companies

On August 20, 2001, we issued an antidumping questionnaire to Sinochem International. Sinochem International did not respond to the questionnaire. Because we have received no response, we determine that the use of facts available is appropriate.

Section 776(a)(2) of the Act provides that ''if an interested party or any other person (A) withholds information that has been requested by the administering authority; (B) fails to provide such information by the deadlines for the submission of the information or in the form and manner requested, subject to subsections (c)(1) and (e) of section 782; (C) significantly impedes a proceeding under this title; or (D) provides such information but the information cannot be verified as provided in section 782(i), the administering authority shall, subject to section 782(d), use the facts otherwise available in reaching the applicable determination under this title.''

Because Sinochem International, which is part of the PRC entity (*see* the ''Separate Rates'' section above), has failed to respond to the original questionnaire and has refused to participate in this administrative review, we find that, in accordance with sections 776(a)(2)(A) and (C) of the Act, the use of facts available is appropriate.

The Department finds that by not providing the necessary responses to the questionnaire issued by the Department, Sinochem International has failed to cooperate to the best of its ability. Therefore, in selecting from the facts available, the Department determines that an adverse inference is warranted.

Section 776(b) of the Act provides that, if the Department finds that an interested party ''has failed to cooperate by not acting to the best of its ability to comply with a request for information,'' the Department may use information that is adverse to the interests of the party as facts otherwise available. Adverse inferences are appropriate ''to ensure that the party does not obtain a more favorable result by failing to cooperate than if it had cooperated fully.'' *See* Statement of Administrative Action (SAA) accompanying the URAA, H.R. Doc. No. 103–316, at 870 (1994). Furthermore, ''an affirmative finding of bad faith on the part of the respondent is not required before the Department may make an adverse inference.'' *See Antidumping Duties; Countervailing Duties: Final Rule,* 62 FR 27296, 27340 (May 19, 1997) (*Final Rule*). Section 776(b) of the Act authorizes the Department to use as adverse facts available information derived from the petition, the final determination from the less than fair value (LTFV) investigation, a previous administrative review, or any other information placed on the record.

Sinochem International never attempted to respond to our questionnaire or explain why it could not respond. Without this information, the Department cannot make a determination of whether this company demonstrates an absence of government control and is therefore entitled to a separate rate. As noted above, section 776(b) of the Act provides that if the Department finds that an interested party has failed to cooperate by not acting to the best of its ability to comply with the Department's request for information, the Department may make an inference that is adverse to the interests of that party in selecting from the facts available, which includes information derived from the petition. In this proceeding, in accordance with Department practice, as adverse facts available we have preliminarily assigned Sinochem International and all other exporters subject to the PRC-wide

rate the petition rate of 243.40 percent, which is the PRC-wide rate established in the LTFV investigation and currently in effect, and the highest dumping margin determined in any segment of this proceeding. *See Notice of Final Determination of Sales at Less Than Fair Value: Sebacic Acid From the People's Republic of China,* 59 FR 28053 (May 31, 1994). The Department's practice when selecting an adverse rate from among the possible sources of information is to ensure that the margin is sufficiently adverse ''as to effectuate the purpose of the facts available role to induce respondents to provide the Department with complete and accurate information in a timely manner.'' *See Static Random Access Memory Semiconductors from Taiwan; Final Determination of Sales at Less than Fair Value,* 63 FR 8909, 8932 (Feb. 23, 1998). The Department also considers the extent to which a party may benefit from its own lack of cooperation in selecting a rate. *See Roller Chain, Other than Bicycle, from Japan; Notice of Final Results and Partial Recision of Antidumping Duty Administrative Review,* 62 FR 60472, 60477 (Nov. 10, 1997). It is reasonable to assume that if Sinochem International could have demonstrated that its actual dumping margins were lower than the PRC-wide rate established in the LTFV investigation, it would have participated in this review and attempted to do so.

Section 776(c) of the Act provides that, where the Department selects from among the facts otherwise available and relies on ''secondary information,'' the Department shall, to the extent practicable, corroborate that information from independent sources reasonably at the Department's disposal. Secondary information is described in the SAA as ''[i]nformation derived from the petition that gave rise to the investigation or review, the final determination concerning the subject merchandise, or any previous review under section 751 concerning the subject merchandise.'' *See* SAA at 870. The SAA states that ''corroborate'' means to determine that the information used has probative value. See id. To corroborate secondary information, the Department will, to the extent practicable, examine the reliability and relevance of the information to be used. Although the petition rate of 243.40 percent constitutes secondary information, the information was corroborated in the most recently completed administrative review of sebacic acid from the PRC. *See See Sebacic Acid From the People's Republic of China: Preliminary Results of Antidumping Duty Administrative Review,* 65 FR 18968, 18970 (April 10, 2000) (unchanged in the final results) (*Sebacic Acid Fifth Review Preliminary Results*). With respect to the relevance aspect of corroboration, the Department will consider information reasonably at its disposal to determine whether a margin continues to have relevance. Where circumstances indicate that the selected margin is not appropriate as adverse facts available, the Department will disregard the margin and determine an appropriate margin. For example, in *Fresh Cut Flowers from Mexico: Final Results of Antidumping Administrative Review,* 61 FR 6812 (Feb. 22, 1996), the Department disregarded the highest margin in that case as adverse best information available (the predecessor to facts available) because the margin was based on another company's uncharacteristic business expense resulting in an unusually high margin. Similarly, the Department does not apply a margin that has been discredited. *See D & L Supply Co.* v. *United States,* 113 F.3d 1220, 1221 (Fed. Cir. 1997) (the Department will not use a margin that has been judicially invalidated); *see also Borden Inc.* v. *United States,* 4 F. Supp. 2d 1221, 1246–48 (CIT 1998) (the Department may not use an uncorroborated petition margin that is high when compared to calculated margins for the POR). None of these unusual circumstances are present here; nor have we any other reason to believe that application of the rate of 243.40 percent as adverse facts available would be inappropriate for the PRC-wide rate. Moreover, the rate used is the currently applicable PRC-wide rate. Thus, the 243.40 percent margin does have relevance. Accordingly, we have used the petition rate from the LTFV investigation, 243.40 percent, because there is no evidence on the record indicating that the selected margin is not appropriate as adverse facts available.

Export Price

For Guangdong and Tianjin, we calculated export price (EP) in accordance with section 772(a) of the Act because the subject merchandise was sold directly to the first unaffiliated purchaser in the United States prior to importation and constructed export price methodology was not otherwise warranted. As appropriate, we calculated EP based on packed, free-on-board, PRC-port prices to unaffiliated purchasers in the United States. We deducted from the starting price amounts for foreign inland truck freight and foreign brokerage and handling. As these movement services were provided by NME suppliers, we valued them using surrogate values from Indian suppliers. For further discussion of our use of surrogate data in a NME proceeding, as well as the selection of India as the appropriate surrogate country, see the ''Normal Value'' section of this notice, below.

For calculating inland truck freight for Guangdong and Tianjin, we used information obtained from the Indian newspaper *Financial Express.* For further discussion, see the Memorandum to the File from Michael Strollo entitled ''Preliminary Valuation of Factors of Production for the Preliminary Results of the 2000–2001 Administrative Review of Sebacic Acid from the People's Republic of China,'' dated July 31, 2002 (*FOP Memo*), which is on file in the Central Records Unit, Room B099 of the main Commerce building (CRU). For brokerage and handling expenses, we used information reported in the new shipper review of stainless steel wire rod from India. *See Certain Stainless Steel Wire Rod From India; Final Results of Antidumping Duty Administrative and New Shipper Reviews,* 64 FR 856 (Jan. 6, 1999).

Normal Value

Section 773(c)(1) of the Act provides that the Department shall determine the NV using a factors-of-production methodology if: (1) The merchandise is exported from a NME country; and (2) the information does not permit the calculation of NV using home-market prices, third-country prices, or constructed value (CV) under section 773(a) of the Act.

The Department has treated the PRC as a NME country in all previous antidumping cases. Furthermore, available information does not permit the calculation of NV using home market prices, third country prices, or CV under section 773(a) of the Act. In accordance with section 771(18)(C)(i) of the Act, any determination that a foreign country is a NME country shall remain in effect until revoked by the administering authority. None of the parties to this proceeding has contested such treatment in this review. Therefore, we treated the PRC as a NME country for purposes of this review and calculated NV by valuing the factors of production in a surrogate country.

Section 773(c)(4) of the Act and 19 CFR 351.408 direct us to select a surrogate country that is at a level of economic development comparable to that of the PRC. On the basis of *per capita* gross domestic product (GDP), the growth rate in *per capita* GDP, and the national distribution of labor, we find that India is at a level of economic development comparable to that of the

PRC. *See* the Surrogate Country Selection Memorandum from Jeffrey May to Louis Apple Re: Administrative Review of Sebacic Acid from the People's Republic of China, dated September 24, 2001, which is on file in the CRU.

Section 773(c)(4) of the Act also requires that, to the extent possible, the Department use a surrogate country that is a significant producer of merchandise comparable to sebacic acid. We determined in prior reviews of this order that India was a significant producer of comparable merchandise (*i.e.,* oxalic acid). *See Sebacic Acid Fifth Review Preliminary Results,* 65 FR at 18970 (unchanged in the final results). For this review, we find that India was a significant producer of oxalic acid during the POR based on the Customs Service import data, and no party to this proceeding has challenged this finding. *See* the memorandum to the File from Gregory Kalbaugh entitled ''Oxalic Acid Production in India During the Period of Review,'' dated July 16, 2002. We find that India fulfills both statutory requirements for use as the surrogate country and have continued to use India as the surrogate country in this administrative review. Unless otherwise noted, we have used publicly available information relating to India to value the various factors of production.

For purposes of calculating NV, we valued PRC factors of production in accordance with section 773(c)(1) of the Act. Factors of production include, but are not limited to: (1) Hours of labor required; (2) quantities of raw materials employed; (3) amounts of energy and other utilities consumed; and (4) representative capital cost, including depreciation. In examining surrogate values, we selected, where possible, the publicly available value which was: (1) An average non-export value; (2) representative of a range of prices within the POR or most contemporaneous with the POR; (3) product-specific; and (4) tax-exclusive. For a more detailed explanation of the methodology used in calculating various surrogate values, see the *FOP Memo.* In accordance with this methodology, we valued the factors of production as follows:

To value caustic soda, cresol, phenol, sulfuric acid, and zinc oxide, we obtained information from the Indian publication *Chemical Weekly.* Where necessary, we adjusted the values reported in *Chemical Weekly* to exclude sales and excise taxes. To value activated carbon and macropore resin, steam coal, inner polyethylene bags, woven plastic bags, jumbo plastic bags, and bag closing thread, we obtained import prices from the March 2001 annual volume of the *Monthly Statistics of the Foreign Trade of India.* To value castor oil and castor seed, we used information from the *Economic Times of Bombay* newspaper.

Consistent with the methodology employed in *Sebacic Acid Fifth Review,* we have determined that fatty acid, glycerine, and castor seed cake (when castor oil is self-produced) are by-products. Because they are by-products, we subtracted the sales revenue of fatty acid, glycerine, and, where applicable, castor seed cake, from the estimated production costs of sebacic acid. This treatment of by-products is also consistent with generally accepted accounting principles. *See Cost Accounting: A Managerial Emphasis* (1991) at pages 539–544. To value fatty acid and glycerine, we used prices published in *Chemical Weekly.* We valued castor seed cake using market prices quoted in the *Economic Times of Bombay* newspaper.

We also allocated a by-product credit for glycerine to the production cost for the co-product capryl alcohol. We deducted a by-product credit for glycerine from sebacic acid based on the ratio of the value of sebacic acid to the total value of both sebacic acid and capryl alcohol.

Consistent with the methodology employed in the previous administrative review, we have determined that capryl alcohol is a co-product and have allocated the factor inputs based on the relative surrogate values for this product and sebacic acid. Additionally, we have used the production times necessary to complete each production stage of sebacic acid as a basis for allocating the amount of labor, energy usage, and factory overhead among the co-product(s). This treatment of co-products is consistent with generally accepted accounting principles. *See Cost Accounting: A Managerial Emphasis* (1991) at pages 528–533. To value capryl alcohol, consistent with our methodology from the previous administrative review, we used POR market prices reported in the *Chemical Weekly* and adjusted the prices for sales and excise taxes.

For electricity, we derived a surrogate value based on 1998/1999 electricity price data published by Tata Energy Research Institute in *The Energy Data Directory and Yearbook 1999/2000.* These data were used in the antidumping duty administrative review of manganese metal from the PRC. *See Notice of Final Results of Antidumping Duty Administrative Review of Manganese Metal from the People's Republic of China,* 66 FR 15076 (Mar. 15, 2001) and accompanying decision memorandum at *Comment 10;* and *Persulfates From the People's Republic of China: Final Results of Antidumping Duty Administrative Review,* 66 FR 42628 (Aug. 14, 2001). We adjusted the values to reflect inflation up to the POR using the electricity-specific price index published by the Reserve Bank of India.

We made adjustments to account for freight costs between the suppliers and the respective manufacturing facilities for each of the factors of production identified above. In accordance with our practice, for inputs for which we used cost-insurance-freight import values from India, we calculated a surrogate freight cost using the shorter of the reported distances either from the closest PRC ocean port to the factory or from the domestic supplier to the factory. *See Final Determination of Sales at Less Than Fair Value: Certain Cut-to-Length Carbon Steel Plate From the People's Republic of China,* 62 FR 61964, 61977 (Nov. 20, 1997); *see also Sigma Corp.* v. *United States,* 117 F.3d 1401 (Fed. Cir. 1997).

For calculating foreign inland truck freight, we used information obtained from the Indian newspaper *Financial Express. See* the *FOP Memo.* To value foreign inland rail freight, we relied upon price quotes obtained from Indian rail freight companies in November 1999. These quotes were used in the investigation of bulk aspirin from the PRC and the 1999–2000 administrative review of tapered roller bearings from the PRC. *See Notice of Preliminary Determination of Sales at Less Than Fair Value: Bulk Aspirin From the People's Republic of China,* 65 FR 116, 119 (Jan. 3, 2000); and *Tapered Roller Bearings and Parts Thereof, Finished and Unfinished, From the People's Republic of China: Preliminary Results of 1999–2000 Administrative Review, Partial Rescission of Review, and Notice of Intent Not To Revoke Order in Part,* 66 FR 35937, 35941 (July 10, 2001). We averaged these quotes, then inflated this average to the POR using the wholesale price index data published in the International Monetary Fund's *International Financial Statistics.*

To value marine insurance, we relied on price quotes obtained from Roanoke Trade Services, Inc., a provider of marine insurance. *See* the memorandum to the File from Gregory Kalbaugh entitled ''Marine Insurance Rates,'' dated July 9, 2002, which is on file in the CRU. To value ocean freight, we relied upon price quotes obtained from Maersk Sealand, a provider of ocean freight services. *See* the memorandum to the File from Gregory Kalbaugh entitled ''Ocean Freight Rates,'' dated

July 9, 2002, which is on file in the CRU.

We valued labor based on a regression-based wage rate, in accordance with 19 CFR 351.408(c)(3). This information is available on the Department's website at *http://ia.ita.doc.gov/wages/9*.

To value factory overhead, selling, general, and administrative expenses, and profit, we obtained data from the January 1997 *Reserve Bank of India Bulletin.*

Preliminary Results of Review

We preliminarily determine that the following margins exist for the period July 1, 2000, through June 30, 2001:

Manufacturer/exporter	Margin (percent)
Guangdong Import and Export Corporation	2.05
Sinochem Tianjin Import and Export Corporation	1.95
PRC-Wide Rate	243.40

The Department will disclose to parties the calculations performed in connection with these preliminary results within five days of the date of publication of this notice. Interested parties may request a hearing within 30 days of the publication. Any hearing, if requested, will be held 44 days after the publication of this notice, or the first workday thereafter. Interested parties may submit case briefs not later than 30 days after the date of publication of this notice. Rebuttal briefs, limited to issues raised in the case briefs, may be filed not later than 35 days after the date of publication of this notice. The Department will publish a notice of the final results of this administrative review, which will include the results of its analysis of issues raised in any such written briefs, within 120 days of the publication of these preliminary results.

The Department will determine and the Customs Service shall assess antidumping duties on all appropriate entries. The Department will issue appropriate appraisement instructions directly to the Customs Service upon completion of this review. The final results of this review shall be the basis for the assessment of antidumping duties on entries of merchandise covered by this review and for future deposits of estimated duties.

For assessment purposes, we do not have the information to calculate an estimated entered value. Accordingly, we have calculated importer-specific duty assessment rates for the merchandise by aggregating the dumping margins calculated for all U.S. sales and dividing this amount by the total quantity of those sales. To determine whether the duty assessment rates were *de minimis,* in accordance with the requirement set forth in 19 CFR 351.106(c)(2), we calculated importer-specific ad valorem ratios based on the EPs.

Furthermore, the following deposit requirements will be effective upon publication of the final results of this administrative review for all shipments of the subject merchandise entered, or withdrawn from warehouse, for consumption on or after the publication date, as provided by section 751(a)(1) of the Act: (1) The cash deposit rate for Guangdong and Tianjin will be that established in the final results of this administrative review; (2) for a company previously found to be entitled to a separate rate and for which no review was requested, the cash deposit rate will be the rate established in the most recent review of that company; (3) the cash deposit rate for all other PRC exporters will be 243.40 percent, the PRC-wide rate established in the LTFV investigation; and (4) the cash deposit rate for a non-PRC exporter of subject merchandise from the PRC will be the rate applicable to the PRC supplier of that exporter. These requirements, when imposed, shall remain in effect until publication of the final results of the next administrative review.

Notification of Interested Parties

This notice serves as a preliminary reminder to importers of their responsibility under 19 CFR 351.402(f) to file a certificate regarding the reimbursement of antidumping duties prior to liquidation of the relevant entries during this review period. Failure to comply with this requirement could result in the Secretary's presumption that reimbursement of antidumping duties occurred and the subsequent assessment of double antidumping duties.

This administrative review is issued and published in accordance with sections 751(a)(1) and 777(i)(1) of the Act.

Dated: July 31, 2002.

Faryar Shirzad,

Assistant Secretary, Import Administration.

[FR Doc. 02–19828 Filed 8–5–02; 8:45 am]

BILLING CODE 3510–DS–P

DEPARTMENT OF COMMERCE

National Oceanic and Atmospheric Administration

[I.D. 072902F]

Marine Mammals; File No. 1245

AGENCY: National Marine Fisheries Service (NMFS), National Oceanic and Atmospheric Administration (NOAA), Commerce.

ACTION: Receipt of application for amendment.

SUMMARY: Notice is hereby given that J. David Whitaker; South Carolina Department of Natural Resources; P.O. Box 12559; Charleston, South Carolina 29422–2559, has requested an amendment to scientific research Permit No. 1245.

DATES: Written or telefaxed comments must be received on or before September 5, 2002.

ADDRESSES: The amendment request and related documents are available for review upon written request or by appointment in the following office(s):

Permits, Conservation and Education Division, Office of Protected Resources, NMFS, 1315 East-West Highway, Room 13705, Silver Spring, MD 20910; phone (301)713–2289; fax (301)713–0376; and

Southeast Region, NMFS, 9721 Executive Center Drive North, St. Petersburg, FL 33702–2432; phone (727)570–5301; fax (727)570–5320.

Written comments or requests for a public hearing on this request should be submitted to the Chief, Permits, Conservation and Education Division, F/PR1, Office of Protected Resources, NMFS, 1315 East-West Highway, Room 13705, Silver Spring, MD 20910. Those individuals requesting a hearing should set forth the specific reasons why a hearing on this particular amendment request would be appropriate.

Comments may also be submitted by facsimile at (301)713–0376, provided the facsimile is confirmed by hard copy submitted by mail and postmarked no later than the closing date of the comment period. Please note that comments will not be accepted by e-mail or other electronic media.

FOR FURTHER INFORMATION CONTACT: Lillian Becker or Ruth Johnson, (301)713–2289.

SUPPLEMENTARY INFORMATION: The subject amendment to Permit No. 1245, issued on May 19, 2000 (65 FR 36666) is requested under the authority of Endangered Species Act of 1973, as amended (16 U.S.C. 1531 *et seq.*).

Permit No. 1245 authorizes the permit holder to capture, handle, flipper and

PIT tag, blood and tissue sample, perform ultrasound, and release 250 loggerhead, 50 Kemp's ridley, 10 green and 1 leatherback turtle. The permit holder requests authorization to extend the permit for two more years, until October 31, 2005, and increase the take of loggerheads to 300 and leatherbacks to 3 due to the increasing numbers of turtles encountered.

In compliance with the National Environmental Policy Act of 1969 (42 U.S.C. 4321 *et seq.*), an initial determination has been made that the activity proposed is categorically excluded from the requirement to prepare an environmental assessment or environmental impact statement.

Concurrent with the publication of this notice in the **Federal Register**, NMFS is forwarding copies of this application to the Marine Mammal Commission and its Committee of Scientific Advisors.

Dated: July 30, 2002.

Eugene T. Nitta,

Acting Chief, Permits, Conservation and Education Division, Office of Protected Resources, National Marine Fisheries Service.

[FR Doc. 02–19819 Filed 8–5–02; 8:45 am]

BILLING CODE 3510–22–S

DEPARTMENT OF EDUCATION

Notice of Proposed Information Collection Requests

AGENCY: Department of Education.

SUMMARY: The Leader, Regulatory Information Management Group, Office of the Chief Information Officer, invites comments on the proposed information collection requests as required by the Paperwork Reduction Act of 1995.

DATES: Interested persons are invited to submit comments on or before October 7, 2002.

SUPPLEMENTARY INFORMATION: Section 3506 of the Paperwork Reduction Act of 1995 (44 U.S.C. chapter 35) requires that the Office of Management and Budget (OMB) provide interested Federal agencies and the public an early opportunity to comment on information collection requests. OMB may amend or waive the requirement for public consultation to the extent that public participation in the approval process would defeat the purpose of the information collection, violate State or Federal law, or substantially interfere with any agency's ability to perform its statutory obligations. The Leader, Regulatory Information Management Group, Office of the Chief Information Officer, publishes that notice containing proposed information collection requests prior to submission of these requests to OMB. Each proposed information collection, grouped by office, contains the following: (1) Type of review requested, e.g. new, revision, extension, existing or reinstatement; (2) Title; (3) Summary of the collection; (4) Description of the need for, and proposed use of, the information; (5) Respondents and frequency of collection; and (6) Reporting and/or Recordkeeping burden. OMB invites public comment.

The Department of Education is especially interested in public comment addressing the following issues: (1) Is this collection necessary to the proper functions of the Department; (2) will this information be processed and used in a timely manner; (3) is the estimate of burden accurate; (4) how might the Department enhance the quality, utility, and clarity of the information to be collected; and (5) how might the Department minimize the burden of this collection on the respondents, including through the use of information technology.

Dated: July 31, 2002.

John Tressler,

Leader, Regulatory Information Management, Office of the Chief Information Officer.

Office of Special Education and Rehabilitative Services

Type of Review: New.

Title: Annual Progress Reporting Form for the American Indian Vocational Rehabilitation Services (AIVRS) Program.

Frequency: Annually.

Affected Public: State, Local, or Tribal Gov't, SEAs or LEAs; Businesses or other for-profit; Not-for-profit institutions.

Reporting and Recordkeeping Hour Burden:

Responses: 66.

Burden Hours: 1,056.

Abstract: This data collection will be conducted annually to obtain program and performance information from the AIVRS grantees on their project activities. The information collected will assist federal Rehabilitation Services Administration (RSA) staff in responding to the Government Performance and Results Act (GPRA). Data will primarily be collected through an Internet form.

Requests for copies of the proposed information collection request may be accessed from *http://edicsweb.ed.gov,* by selecting the ''Browse Pending Collections'' link and by clicking on link number 2064. When you access the information collection, click on ''Download Attachments '' to view. Written requests for information should be addressed to Vivian Reese, Department of Education, 400 Maryland Avenue, SW, Room 4050, Regional Office Building 3, Washington, DC 20202–4651 or to the e-mail address *Vivian.Reese@ed.gov.* Requests may also be electronically mailed to the internet address *OCIO_RIMG@ed.gov* or faxed to 202–708–9346. Please specify the complete title of the information collection when making your request.

Comments regarding burden and/or the collection activity requirements should be directed to Sheila Carey at (202) 708–6287 or via her e-mail address *Sheila.Carey@ed.gov.* Individuals who use a telecommunications device for the deaf (TDD) may call the Federal Information Relay Service (FIRS) at 1–800–877–8339.

[FR Doc. 02–19779 Filed 8–5–02; 8:45 am]

BILLING CODE 4000–01–P

DEPARTMENT OF EDUCATION

Notice of Proposed Information Collection Requests

AGENCY: Department of Education.

ACTION: Correction notice.

SUMMARY: On July 31, 2002, the Department of Education published two 60-day public comment period notices for the information collections, ''Guidance to SEAs Seeking to Use an Alternative Method to Distribute Title I Funds to LEAs with Fewer Than 20,000 Total Residents'' and ''Guidance to SEAs on Procedures for Adjusting ED-determined Title I Allocations to Local Educational Agencies (LEAs).'' These notices were incorrectly published since comment period will be provided with the publication of the Notice of Proposed Rulemaking (NPRM) for Title I—Improving the Academic Achievement of the Disadvantaged. The comment period for these two information collections should coincide with the published NPRM. The Leader, Regulatory Information Management, Office of the Chief Information Officer, hereby issues a correction notice as required by the Paperwork Reduction Act of 1995.

FOR FURTHER INFORMATION CONTACT: Kathy Axt at her internet address *Kathy.Axt@ed.gov.*

Dated: July 31, 2002.

John D. Tressler,

Leader, Regulatory Information Management Group, Office of the Chief Information Officer.

[FR Doc. 02–19780 Filed 8–5–02; 8:45 am]

BILLING CODE 4000–01–P

DEPARTMENT OF ENERGY

Federal Energy Regulatory Commission

[Project No. 184–065, California]

El Dorado Irrigation District; Notice of Public Meetings

July 31, 2002.

The Federal Energy Regulatory Commission (Commission) is reviewing the application for a new license for the El Dorado Project (FERC No. 184), filed on February 22, 2000. The El Dorado Project, licensed to the El Dorado Irrigation District (EID), is located on the South Fork American River, in El Dorado, Alpine, and Amador Counties, California. The project occupies lands of the Eldorado National Forest.

The EID, several state and federal agencies, and several non-governmental agencies have asked the Commission for time to work collaboratively with a facilitator to resolve certain issues relevant to this proceeding. These meetings are a part of that collaborative process.

On Monday, August 12, the Recreation/Socioeconomics workgroup will meet from 10 a.m. until 4 p.m. On Tuesday, August 13 and Wednesday, August 14, the Aquatics/Hydrology workgroup will meet from 9 a.m. until 4 p.m.

The workgroup meetings will focus on reviewing study results and the development of management objectives. We invite the participation of all interested governmental agencies, non-governmental organizations, and the general public in these meetings.

All meetings will be held at the Kirkwood Community Service Building, 33540 Loop Road, Kirkwood, California.

For further information, please contact Elizabeth Molloy at (202) 208–0771 or John Mudre at (202) 219–1208.

Linwood A. Watson, Jr.,

Deputy Secretary.

[FR Doc. 02–19773 Filed 8–5–02; 8:45 am]

BILLING CODE 6717–01–P

DEPARTMENT OF ENERGY

Federal Energy Regulatory Commission

[Docket No. EL02–110–000]

New England Coalition On Nuclear Pollution and Citizens Awareness Network, Complainants, v. Vermont Yankee Nuclear Power Corporation, New England Power Company, Green Mountain Power Company, Central Vermont Public Service Corporation, Central Maine Power Company, Cambridge Electric Light Company, Northeast Utilities (Through Its Affiliates and Operating Companies Western Massachusetts Electric Company, Connecticut Light and Power Company, and Public Service Company of New Hampshire) and Entergy Corporation d/b/a Entergy Nuclear Vermont d/b/a ENVY, Respondents; Notice of Complaint

July 31, 2002.

Take notice that on July 30, 2002, The New England Coalition on Nuclear Pollution, Inc., and The Citizens Awareness Network, Inc., submitted a Complaint seeking a declaratory ruling and Order on an allegation that the July 22, 2002 agreement among Entergy Nuclear Vermont Yankee, Vermont Yankee Nuclear Power Corporation, Central Vermont Public Service Company, Green Mountain Power Company, Connecticut Light & Power, New England Power Company, Western Massachusetts Electric Company, Public Service Company Of New Hampshire, Central Maine Power, and Cambridge Electric Light Company, eliminates the right of non-Vermont ratepayers to a return of any excess Vermont Yankee decommissioning funds, violates 18 CFR 35.32(a)(7), has been placed in effect without filing in violation of 16 U.S.C. Sec. 824d, and is unlawful discrimination in violation of 16 U.S.C. Sec. 824d and Sec. 824e. Complainants request that the Commission give this matter fast-track consideration. Complainants further request that the Commission order Respondents to comply with 16 U.S.C. 824d by filing the July 22, 2002, Agreements in the manner required by 18 CFR part 35, and suspend the effectiveness of the July 22, 2002 Agreements until Respondents have filed them with the FERC and the 60-day suspension period has expired.

Copies of the Complaint were served via e-mail on the FERC listed corporate representatives of respondents.

Any person desiring to be heard or to protest this filing should file with the Federal Energy Regulatory Commission, 888 First Street, NE., Washington, DC 20426, in accordance with rules 211 and 214 of the Commission's rules of practice and procedure (18 CFR 385.211 and 385.214). Protests will be considered by the Commission in determining the appropriate action to be taken, but will not serve to make protestants parties to the proceeding. Any person wishing to become a party must file a motion to intervene. The answer to the complaint and all comments, interventions or protests must be filed on or before August 19, 2002. This filing is available for review at the Commission or may be viewed on the Commission's web site at *http://www.ferc.gov* using the ''RIMS'' link, select ''Docket #'' and follow the instructions (call 202–208–2222 for assistance). The answer to the complaint, comments, protests and interventions may be filed electronically via the Internet in lieu of paper; *see* 18 CFR 385.2001(a)(1)(iii) and the instructions on the Commission's web site under the ''e-Filing'' link. The Commission strongly encourages electronic filings.

Linwood A. Watson, Jr.

Deputy Secretary.

[FR Doc. 02–19771 Filed 8–5–02; 8:45 am]

BILLING CODE 6717–01–P

DEPARTMENT OF ENERGY

Federal Energy Regulatory Commission

Notice of Application Ready for Environmental Analysis and Soliciting Comments, Recommendations, Terms and Conditions, and Prescriptions

July 31, 2002.

Take notice that the following hydroelectric application has been filed with the Commission and is available for public inspection.

a. *Type of Application:* New Major License.

b. *Project No.:* 184–065.

c. *Date filed:* February 22, 2000.

d. *Applicant:* El Dorado Irrigation District.

e. *Name of Project:* El Dorado Project.

f. *Location:* Located on the South Fork of the American River and its tributaries in the counties of El Dorado, Alpine, and Amador, California, partially within the boundaries of the Eldorado National Forest. The project also diverts about 1,900 acre-feet of water from lower Echo Lake in the upper Truckee River Basin.

g. *Filed Pursuant to:* Federal Power Act 16 U.S.C. 791 (a)—825(r).

h. *Applicant Contact:* William Wilkins, General Manager, El Dorado Irrigation District, 2890 Mosquito Road,

Placerville, CA 95667–4700. Telephone (530) 622–4513.

i. *FERC Contact:* Any questions concerning this notice should be addressed to Susan O'Brien, e-mail address *susan.obrien@ferc.gov,* or telephone (202) 502–8849.

j. *Deadline for filing comments, recommendations, terms and conditions, and prescriptions:* October 31, 2002; reply comments due November 30, 2002.

All documents (original and eight copies) should be filed with: Magalie R. Salas, Secretary, Federal Energy Regulatory Commission, 888 First Street, NE., Washington, DC 20426.

The Commission's Rules of Practice require all intervenors filing documents with the Commission to serve a copy of that document on each person on the official service list for the project. Further, if an intervenor files comments or documents with the Commission relating to the merits of an issue that may affect the responsibilities of a particular resource agency, they must also serve a copy of the document on that resource agency.

Comments, recommendations, terms and conditions, and prescriptions may be filed electronically via the Internet in lieu of paper. See 18 CFR 385.2001(a)(1)(iii) and the instructions on the Commission's web site (http://www.ferc.gov) under the ''e-Filing'' link. The Commission strongly encourages electronic filings.

k. This application has been accepted, and is ready for environmental analysis at this time.

l. The project consists of the following existing facilities: (1) A 113-foot-long, 20-foot-high rubble and masonry main dam with a crest elevation of 8,210 feet mean sea level (msl) and 11 auxiliary dams, impounding Lake Aloha, a reservoir that covers 590 acres (at full pond) with a usable storage of 5,179 acre-feet; (2) a 320-foot-long, 14-foot-high roller-compacted concrete dam with a crest elevation of 7,413 feet msl, impounding lower Echo Lake, a reservoir that covers 335 acres (at full pond) with a usable storage of 1,900 acre-feet; (3) a 6,125-foot-long conduit from lower Echo Lake to the South Fork of the American River; (4) a 1,200-foot-long, 84.5-feet-high gunite-core earthfill main dam with a crest elevation of 7,959.5 feet msl and one auxiliary dam, impounding Caples Lake, a reservoir that covers 624 acres (at full pond) with a usable storage of 22,490 acre-feet; (5) a 280-foot-long, 30-foot-high rock and earthfill dam with a crest elevation of 7,261 feet msl, impounding Silver Lake, a reservoir that covers 502 acres (at full pond) with usable storage of 13,280 acre-feet; (6) a 160-foot-long, 15-foot-high rockfill reinforced binwall diversion dam with a crest elevation of 3,910.5 feet msl, impounding 200 acre-feet of the South Fork of the American River; (7) a 22.3-mile-long conveyance from the diversion dam to the forebay; (8) a 70-foot-long, 9.5-foot-high concrete diversion dam with a crest elevation of 4,007 feet msl on Alder Creek; (9) six small creeks that divert into the conveyance—Mill Creek, Bull Creek, Carpenter Creek, Ogilby Creek, Esmeralda Creek and an unnamed creek; (10) a 836-foot-long, 91-foot-high earthfill forebay dam with a crest elevation of 3,804 feet msl, a reservoir that covers 23 acres (at full pond) with a usable storage of 356-acre-feet; (11) a 2.8-mile combination pipeline and penstock conveyance, with surge tank, from the forebay to the powerhouse; (12) a 110-foot-long by 40-foot-wide steel frame powerhouse with reinforced concrete walls and an installed capacity of 21,000 kilowatts, producing about 106 gigawatt-hours annually when operational; and (13) other appurtenances. No transmission lines are included with the project.

m. A copy of the application is on file with the Commission and is available for public inspection. This filing may also be viewed on the web at *http://www.ferc.gov* using the ''RIMS'' link—select ''Docket #'' and follow the instructions (call 202–208–2222 for assistance). A copy is also available for inspection and reproduction at the address in item h above.

n. All filings must (1) bear in all capital letters the title ''COMMENTS'', ''REPLY COMMENTS'', ''RECOMMENDATIONS,'' ''TERMS AND CONDITIONS,'' or ''PRESCRIPTIONS;'' (2) set forth in the heading the name of the applicant and the project number of the application to which the filing responds; (3) furnish the name, address, and telephone number of the person submitting the filing; and (4) otherwise comply with the requirements of 18 CFR 385.2001 through 385.2005. All comments, recommendations, terms and conditions or prescriptions must set forth their evidentiary basis and otherwise comply with the requirements of 18 CFR 4.34(b). Agencies may obtain copies of the application directly from the applicant. Each filing must be accompanied by proof of service on all persons listed on the service list prepared by the Commission in this proceeding, in accordance with 18 CFR 4.34(b), and 385.2010.

o. *Procedural schedule:* The application will be processed according to the following Hydro Licensing Schedule. Revisions to the schedule will be made as appropriate.

Notice of application ready for environmental analysis: July 30, 2002.
Comment due date: October 31, 2002.
Reply comment due date: November 30, 2002.
Notice of the availability of the draft EIS: January 31, 2003.
Comment due date: March 31, 2003.
Notice of the availability of the final EIS: May 15, 2003.

Linwood A. Watson, Jr.,
Deputy Secretary.

[FR Doc. 02–19772 Filed 8–5–02; 8:45 am]

BILLING CODE 6717–01–P

DEPARTMENT OF ENERGY

Federal Energy Regulatory Commission

Notice of Intent To File Application for a New License

Issued: July 31, 2002.

Take notice that the following notice of intent has been filed with the Commission and is available for public inspection:

a. *Type of filing:* Notice of Intent to File an Application for New License.

b. *Project No:* 2101.

c. *Date filed:* July 18, 2002.

d. *Submitted By:* Sacramento Municipal Utility District.

e. *Name of Project:* Upper American River Project.

f. *Location:* Project is located in Sacramento County and EL Dorado County, California, along the Rubicon River, Silver Creek, and South Fork of the American River. Nearby cities include Placerville, South Lake Tahoe, Folsom, and Sacramento, California.

g. *Filed Pursuant to:* Section 15 of the Federal Power Act, 18 CFR 16.6.

h. Pursuant to section 16.19 of the Commission's regulations, the licensee is required to make available the information described in section 16.7 of the regulations. Such information is available from the Sacramento Municipal Utility District, 6301 S. Street, Hydro Relicensing Public Library, Sacramento, CA, 95817–1899, 916–648–1234.

i. *FERC Contact:* James Fargo, 202–219–2848. James.Fargo@Ferc.Gov.

j. *Expiration Date of Current License:* July 31, 2007.

k. *Project Description:* The project's facilities include three dams and storage reservoirs, eight diversion dams and eight powerhouses with a total generating capacity of approximately 68,800 kilowatts.

l. The licensee states its unequivocal intent to submit an application for a

new license for Project No. 2101. Pursuant to 18 CFR 16.9(b)(1) each application for a new license and any competing license applications must be filed with the Commission at least 24 months prior to the expiration of the existing license. All applications for license for this project must be filed by July 31, 2005.

A copy of the Notice of Intent is on file with the Commission and is available for public inspection. This filing may also be viewed on the web at http://www.ferc.gov using the ''RIMS'' link—select ''Docket #'' and follow the instructions (call 202–208–2222 for assistance). A copy is also available for inspection and reproduction at the address in the item above.

Linwood A. Watson, Jr.,

Deputy Secretary.

[FR Doc. 02–19774 Filed 8–5–02; 8:45 am]

BILLING CODE 6717–01–P

DEPARTMENT OF ENERGY

Federal Energy Regulatory Commission

Notice of Application Ready for Environmental Analysis and Soliciting Comments, Recommendations, Terms and Conditions, and Prescriptions

July 31, 2002.

Take notice that the following hydroelectric application has been filed with the Commission and is available for public inspection.

a. *Type of Application:* New Minor License.

b. *Project No.:* 2782–006.

c. *Date filed:* October 30, 2001.

d. *Applicant:* Parowan City.

e. *Name of Project:* Red Creek Hydroelectric Project.

f. *Location:* On Red Creek, near the City of Paragonah, in Iron County, Utah. The project occupies about 19 acres of United States lands administered by the Bureau of Land Management.

g. *Filed Pursuant to:* Federal Power Act 16 U.S.C. 791(a)—825(r).

h. *Applicant Contact:* Alden C. Robinson, Sunrise Engineering, Inc., 25 E. 500 N., Fillmore, Utah 84631–3513; (435) 743–1143.

i. *FERC Contact:* Steve Hocking at *steve.hocking@ferc.gov* or (202) 219–2656.

j. *Cooperating agencies:* We ask Federal, state, local, and tribal agencies with jurisdiction and/or special expertise with respect to environmental issues to cooperate with us in the preparation of an environmental document for this project. Agencies who would like to request cooperating agency status should follow the instructions for filing comments described in item k below.

k. *Deadline for filing comments, recommendations, terms and conditions, prescriptions, and requests for cooperating agency status:* 60 days from the issuance of this notice.

All documents (original and eight copies) should be filed with: Magalie R. Salas, Secretary, Federal Energy Regulatory Commission, 888 First Street, NE., Washington, DC 20426.

The Commission's rules of practice require all intervenors filing documents with the Commission to serve a copy of that document on each person on the official service list for the project. Further, if an intervener files comments or documents with the Commission relating to the merits of an issue that may affect the responsibilities of a particular resource agency, they must also serve a copy of the document on that resource agency.

Comments, recommendations, terms and conditions, prescriptions, and requests for cooperating agency status may be filed electronically via the Internet in lieu of paper. *See* 18 CFR 385.2001(a)(1)(iii) and the instructions on the Commission's web site (*http://www.ferc.gov*) under the ''e-Filing'' link. The Commission strongly encourages electronic filings.

l. This application has been accepted and is ready for environmental analysis at this time.

m. *Description of the Project:* The existing project consists of: (1) The Red Creek diversion dam which is a concrete structure 8 feet high and 48 feet long; an intake with a radial gate and trash rack connected to a 16,098-foot-long, 16 to 18-inch diameter steel penstock, (2) the South Fork diversion dam which is a concrete structure 8 feet high and 29 feet long; an intake with a radial gate and trash rack connected to a 4,263-foot-long, 10-inch diameter steel penstock, (3) a pump station at the junction of the South Fork and Red Creek penstocks housing a 15 horsepower and a 20 horsepower pump with control equipment, (4) a 27-foot by 32-foot concrete block powerhouse with a single 500-kilowatt (kW) generator, (5) two 270-foot-long transmission lines, and (6) appurtenant facilities.

n. A copy of the application is on file with the Commission and is available for public inspection. This filing may also be viewed on the web at *http://www.ferc.gov* using the ''RIMS'' link—select ''Docket #'' and follow the instructions (call 202–208–2222 for assistance). A copy is also available for inspection and reproduction at the address in item h above.

o. The Commission directs, pursuant to Section 4.34(b) of the Regulations (*see* Order No. 533 issued May 8, 1991, 56 FR 23108, May 20, 1991) that all comments, recommendations, terms and conditions and prescriptions concerning the application be filed with the Commission within 60 days from the issuance date of this notice. All reply comments must be filed with the Commission within 105 days from the date of this notice.

Anyone may obtain an extension of time for these deadlines from the Commission only upon a showing of good cause or extraordinary circumstances in accordance with 18 CFR 385.2008.

All filings must: (1) Bear in all capital letters the title ''COMMENTS,'' ''REPLY COMMENTS,'' ''RECOMMENDATIONS,'' ''TERMS AND CONDITIONS,'' or ''PRESCRIPTIONS;'' (2) set forth in the heading the name of the applicant and the project number of the application to which the filing responds; (3) furnish the name, address, and telephone number of the person submitting the filing; and (4) otherwise comply with the requirements of 18 CFR 385.2001 through 385.2005. All comments, recommendations, terms and conditions or prescriptions must set forth their evidentiary basis and otherwise comply with the requirements of 18 CFR 4.34(b). Agencies may obtain copies of the application directly from the applicant. Each filing must be accompanied by proof of service on all persons listed on the service list prepared by the Commission in this proceeding, in accordance with 18 CFR 4.34(b) and 385.2010.

Linwood A. Watson, Jr.,

Deputy Secretary.

[FR Doc. 02–19775 Filed 8–5–02; 8:45 am]

BILLING CODE 6717–01–P

ENVIRONMENTAL PROTECTION AGENCY

[Regional Docket Nos. II–2000–04, 05, 06; FRL–7256–2]

Clean Air Act Operating Permit Program; Petitions for Objection to State Operating Permits for the Rochdale Village Power Plant; Tanagraphics, Inc.; and the North Shore Towers Apartments Total Energy Plant

AGENCY: Environmental Protection Agency (EPA).

ACTION: Notice of final orders on petitions to object to three State operating permits.

SUMMARY: This document announces that the EPA Administrator has responded to three citizen petitions asking EPA to object to operating permits issued to three facilities by the New York State Department of Environmental Conservation (NYSDEC). Specifically, the Administrator has partially granted and partially denied a petition submitted by the New York Public Interest Research Group (NYPIRG) to object to the State operating permit issued to the power plant operated by Rochdale Village, Inc. in Queens, NY. Second, the Administrator has partially granted and partially denied a petition submitted by NYPIRG to object to the State operating permit issued to Tanagraphics, Inc., in New York, NY. Third, the Administrator has partially granted and partially denied a petition submitted by NYPIRG to object to the State operating permit issued to North Shore Towers Apartments Total Energy Plant, in Floral Park, NY.

Pursuant to section 505(b)(2) of the Clean Air Act (Act), petitioner may seek judicial review of those portions of the petitions which EPA denied in the United States Court of Appeals for the appropriate circuit. Any petition for review shall be filed within 60 days from the date this notice appears in the **Federal Register**, pursuant to section 307 of the Act.

ADDRESSES: You may review copies of the final orders, the petitions, and other supporting information at the EPA, Region 2, 290 Broadway, New York, New York 10007–1866. If you wish to examine these documents, you should make an appointment at least 24 hours before visiting day. Each of the final orders is also available electronically at: *http://www.epa.gov/region07/programs/artd/air/title5/petitiondb/petitiondb2000.htm.*

FOR FURTHER INFORMATION CONTACT: Steven Riva, Chief, Permitting Section, Air Programs Branch, Division of Environmental Planning and Protection, EPA, Region 2, 290 Broadway, 25th Floor, New York, New York 10007–1866, telephone (212) 637–4074.

SUPPLEMENTARY INFORMATION: The Act affords EPA a 45-day period to review, and object to as appropriate, operating permits proposed by State permitting authorities. Section 505(b)(2) of the Act authorizes any person to petition the EPA Administrator within 60 days after the expiration of this review period to object to State operating permits if EPA has not done so. Petitions must be based only on objections to the permit that were raised with reasonable specificity during the public comment period provided by the State, unless the petitioner demonstrates that it was impracticable to raise these issues during the comment period or the grounds for the issues arose after this period.

I. Rochdale Village

On June 7, 2000, the EPA received a petition from NYPIRG, requesting that EPA object to the issuance of the title V operating permit to Rochdale Village. The petition raises issues regarding the permit application, the permit issuance process, and the permit itself. NYPIRG asserts that (1) NYSDEC violated the public participation requirements of 40 CFR 70.7(h) by inappropriately denying NYPIRG's request for a public hearing; (2) the permit is based on an incomplete permit application in violation of 40 CFR 70.5(c); (3) the permit lacks a statement of basis as required by 40 CFR 70.7(a)(5); (4) the permit repeatedly violates the 40 CFR 70.6(a)(3)(iii)(A) requirement that the permittee submit reports of any required monitoring at least every six months; (5) the permit distorts the annual compliance certification requirement of CAA section 114(a)(3) and 40 CFR 70.6(c)(5); (6) the permit does not assure compliance with all applicable requirements as mandated by 40 CFR 70.1(b) and 70.6(a)(1) because it illegally sanctions the systematic violation of applicable requirements during startup/shutdown, malfunction, maintenance, and upset conditions; (7) the permit does not require prompt reporting of all deviations from permit requirements as mandated by 40 CFR 70.6(a)(3)(iii)(B); and (8) the permit does not assure compliance with all applicable requirements as mandated by 40 CFR 70.1(b) and 70.6(a)(1) because many individual permit conditions lack adequate periodic monitoring and are not practically enforceable.

NYPIRG raises each of these issues in the petitions on Tanagraphics and North Shore Towers Apartments, as well. In each of these petitions, the eighth issue is subdivided into several detailed points, some which are permit-specific and some which are shared among the other permits.

On July 3, 2002, the Administrator issued an order partially granting and partially denying the petition on Rochdale Village. The order explains the reasons behind EPA's conclusion that the NYSDEC must reopen the permit to: (1) Indicate the facility employs continuous opacity monitors, and to require quarterly reporting of opacity data; (2) require quarterly reporting of natural gas and fuel oil consumption data, as required by the approved plan for complying with the Reasonably Available Control Technology requirements for nitrogen oxides; and (3) remove a condition that improperly applies an inapplicable sulfur requirement to the facility. The order also explains the reasons for denying NYPIRG's remaining claims.

II. Tanagraphics

On July 7, 2000, the EPA received a petition from NYPIRG, requesting that EPA object to the issuance of the title V operating permit to Tanagraphics, on the grounds listed above. On July 3, 2002, the Administrator issued an order partially granting and partially denying the petition. The order explains the reasons behind EPA's conclusion that the NYSDEC must reopen the permit to: (1) Include periodic monitoring to assure compliance with DEC's rules on the use of open containers; (2) require testing of fountain solutions, inks, and coatings more frequently than one time; and (3) include two opacity conditions (with periodic monitoring) that were omitted from the original permit. The order also explains the reasons for denying NYPIRG's remaining claims.

III. North Shore Towers Apartments

On August 1, 2000, the EPA received a petition from NYPIRG, requesting that EPA object to the issuance of the title V operating permit to North Shore Towers Apartments on the grounds listed above. On July 3, 2002, the Administrator issued an order partially granting and partially denying the petition. The order explains the reasons behind EPA's conclusion that the NYSDEC must reopen the permit to: (1) Revise a nitrogen oxides monitoring provision to reference the most recently approved stack test results; and (2) revise a sulfur-in-fuel recordkeeping requirement to retain records on-site for 5-years. The order also explains the reasons for denying NYPIRG's remaining claims.

Dated: July 23, 2002.

Jane M. Kenny,

Regional Administrator, Region 2.

[FR Doc. 02–19795 Filed 8–5–02; 8:45 am]

BILLING CODE 6560–50–U

ENVIRONMENTAL PROTECTION AGENCY

[FRL–7255–2]

Joint USEPA/State Environmental Council of the States (ECOS) Agreement to Pursue Regulatory Innovation: Alternative Treatment Technique for National Primary Drinking Water Lead and Copper Regulations for Certain Non-transient Non-community Water Systems

AGENCY: Environmental Protection Agency.

ACTION: Notice of availability of draft variance for public review and comment.

SUMMARY: USEPA Region 5 is today proposing to issue a variance under section 1415(a)(3) of the Safe Drinking Water Act (SDWA) for certain Non-Transient Non-Community Water Systems (NTNCWSs) in the State of Michigan. The final SDWA variance would be used to implement a project entitled ''Use of Flushing to Meet the Federal Lead/Copper Regulation for Nontransient Noncommunity Public Water Supply Systems.'' This project is being proposed under the Joint USEPA/State Agreement to Pursue Regulatory Innovation between the USEPA and the Environmental Council of the States (ECOS).

DATES: All public comments on this draft variance must be received on or before September 5, 2002.

ADDRESSES: All written comments on the SDWA draft variance should be sent to: Miguel Del Toral, USEPA Region 5, Ground Water and Drinking Water Branch, Mailcode WG–15J, 77 West Jackson Boulevard, Chicago, Illinois, 60604. Comments may also be faxed to Miguel Del Toral at (312) 886–6171, or via electronic mail to: *deltoral.miguel@epa.gov*.

FOR FURTHER INFORMATION CONTACT: To obtain a copy of the SDWA draft variance, and other project documents, contact: Miguel Del Toral, USEPA Region 5, Ground Water and Drinking Water Branch, Mailcode WG–15J, 77 West Jackson Boulevard, Chicago, Illinois 60604. The SDWA draft variance and other project documents are also available on the Internet at the following location: *http://www.epa.gov/region 5/water/notices.htm*. Questions regarding the SDWA draft variance can be directed to Miguel Del Toral at (312) 886–5253.

SUPPLEMENTARY INFORMATION: The National Primary Drinking Water Regulations (NPDWRs) for lead and copper require all Community Water Systems (CWS) and NTNCWSs to optimize corrosion control, to minimize levels of lead and copper at consumers' taps. CWSs and NTNCWSs that exceed either the lead or copper ''action level'' must follow the treatment technique specified in the NPDWRs (i.e., installing corrosion control treatment (CCT)) to minimize lead levels at consumers' taps. The Michigan Department of Environmental Quality (MDEQ), which has primary enforcement responsibility for implementing the NPDWRs for lead and copper in the State of Michigan, believes that an alternative approach to CCT would be just as efficient in lowering the levels of lead and copper at consumers' taps. The alternative approach includes the replacement of fixtures contributing significant levels of lead and/or copper, and the flushing of all taps used for human consumption on a regular basis.

On May 5, 1998, USEPA and ECOS signed the ''Joint EPA/State Agreement to Pursue Regulatory Innovation.'' Under this Agreement, USEPA and State environmental officials agreed to explore innovative ways to implement environmental programs. MDEQ has submitted a Joint Agreement proposal under this Agreement that would allow certain NTNCWSs to use the alternative approach in lieu of complying with the treatment technique specified in the NPDWRs for lead and copper promulgated by USEPA under section 1412 of SDWA (*See* 40 CFR 141.80 through 141.91). USEPA has identified a variance, under Section 1415(a)(3) of SDWA, as the potentially appropriate mechanism for allowing NTNCWSs within Michigan that qualify for the variance and comply with its terms to use an alternative approach. Section 1415(a)(3) of SDWA gives USEPA the authority to issue a variance from a treatment technique ''. . .upon

a showing by any person that an alternative treatment technique not included in such requirement is at least as efficient in lowering the level of the contaminant with respect to which such requirement was prescribed.'' USEPA has preliminarily determined that MDEQ has made a proper showing that the alternative approach will be as efficient in lowering the levels of lead and/or copper and therefore proposes to issue a variance. The SDWA draft variance specifies eligibility and performance criteria that NTNCWSs must satisfy to be eligible for the SDWA variance, and performance criteria that these systems must satisfy to remain eligible for the SDWA variance.

After consideration of public comments received on the SDWA draft variance, USEPA will take final action on the SDWA variance, which would include any necessary modification(s) based on comments received. USEPA and MDEQ have also signed a Memorandum of Understanding (MOU) which also contains the draft eligibility and participation criteria, and outlines the roles and responsibilities of USEPA and MDEQ in implementing this project. A copy of the MOU can also be obtained by contacting Miguel Del Toral at the addresses or phone number above.

Dated: July 19, 2002.

Bharat Mathur,

Acting Regional Administrator, Region V.

[FR Doc. 02–19800 Filed 8–5–02; 8:45 am]

BILLING CODE 6560–50–U

FEDERAL EMERGENCY MANAGEMENT AGENCY

Agency Information Collection Activities: Proposed Collection; Comment Request

ACTION: Notice and request for comments.

SUMMARY: The Federal Emergency Management Agency (FEMA), as part of its continuing effort to reduce paperwork and respondent burden, invites the general public and other Federal agencies to take this opportunity to comment on the proposed information collection. In accordance with the Paperwork Reduction Act of 1995 (44 U.S.C. 3506(c)(2)(A)), this notice seeks comments concerning FEMA and other Federal agencies policies and procedures for providing Federal support for offsite radiological emergency planning and preparedness. It describes the process for providing Federal facilities and resources to the nuclear power plant licensee after an affirmative determination has been made on the licensee's certification of a ''decline or fail'' situation.

SUPPLEMENTARY INFORMATION: Executive Order 12657, dated November 18, 1998, charged FEMA and other Federal agencies with the emergency planning response in cases where State and Local governments have declined or failed to prepare emergency plans. To implement Executive Order 12657, FEMA worked with the Nuclear Regulatory Commission (NRC) and other Federal agencies on the Federal Radiological Preparedness Coordinating Committee (FRPCC) to develop regulation 44 CFR 352, Commercial Nuclear Power Plants: Emergency Preparedness planning. This

regulation establishes policies and procedures for a licensee submission of a certification of ''decline or fail'', and for FEMA's determination concerning Federal assistance to the licensee. It also establishes policies and procedures for providing Federal Support for offsite planning and preparedness.

In accordance with Executive Order 12657, FEMA will need certain information from the licensee in order to form a decision as to whether or not a condition of ''decline or fail'' exists on the part of State or Local governments (44 CFR 352.3–4). This information will be collected by the appropriate FEMA Regional Office or Headquarters. Also, when a licensee requests Federal facilities or resources, FEMA will need information from the NRC as to whether the licensee has made maximum use of its resources and the extent to which the licensee has complied with 10 CFR 50.47(c)(1) and 44 FR 352.5. This information will be collected by the NRC and will be provided to FEMA through consultation between the two agencies.

Collection of Information

Title: Federal Assistance for Offsite Radiological Emergency Planning.

Type of Information Collection: Reinstatement, without change of a previously approved collection for which approval has expired.

OMB Number: 3067–0201.

Form Numbers: None.

Abstract: In accordance with Executive Order 12657 and under regulation 44 CFR 352, FEMA will need certain information from the licensee in order to form a decision as to whether or not a condition of ''decline or fail'' exists on the part of the State or Local government. Also, when a licensee requests Federal facilities or resources, FEMA will need information from the NRC as to whether the licensee has made maximum use of its resources and the extent to which the licensee has complied with 10 CFR 50.47(c)(1).

Affected Public: Business or Other For-Profit and State, Local or Tribal Government.

Estimated Total Annual Burden Hours: 160.

Estimated Cost: 3,323.

Comments: Written comments are solicited to (a) evaluate whether the proposed data collection is necessary for the proper performance of the agency, including whether the information shall have practical utility; (b) evaluate the accuracy of the agency's estimate of the burden of the proposed collection of information, including the validity of the methodology and assumptions used; (c) enhance the quality, utility, and clarity of the information to be collected; and (d) minimize the burden of the collection of information on those who are to respond, including through the use of appropriate automated, electronic, mechanical, or other technological collection techniques or other forms of information technology, e.g., permitting electronic submission of responses. Comments should be received within 60 days of the date of this notice.

ADDRESSES: Interested persons should submit written comments to Muriel B. Anderson, Chief, Records Management Section, Program Services and Systems Branch, Facilities Management and Services Division, Administration and Resource Planning Directorate, Federal Emergency Management Agency, 500 C Street, SW., Room 316, Washington, DC 20472.

FOR FURTHER INFORMATION CONTACT: Contact William McNutt, Program Specialist, Office of National Preparedness and (202) 646–2857 for additional information. You may contact Ms. Anderson for copies of the proposed collection of information at telephone number (202) 646–2625 or facsimile number (202) 646–3347 or email *muriel.Anderson@fema.gov.*

Dated: July 29, 2002.

Reginald Trujillo,

Branch Chief, Program Services and Systems Branch, Facilities Management and Services Division, Administration and Resource Planning Directorate.

[FR Doc. 02–19753 Filed 8–5–02; 8:45 am]

BILLING CODE 6718–01–P

FEDERAL EMERGENCY MANAGEMENT AGENCY

Agency Information Collection Activities: Proposed Collection; Comment Request

ACTION: Notice and request for comments.

SUMMARY: The Federal Emergency Management Agency, as part of its continuing effort to reduce paperwork and respondent burden, invites the general public and other Federal agencies to take this opportunity to comment on proposed continuing information collections. In accordance with the Paperwork Reduction Act of 1995 (44 U.S.C. 3506(c)(2)(A)), this notice seeks comments concerning the collection of information required to implement the Flood Mitigation Assistance program requirements.

SUPPLEMENTARY INFORMATION: The Program was created with the enactment of the National Flood Insurance Reform Act of 1994 (the Act). Section 553 of the Act authorizes a mitigation assistance program which FEMA has designated Flood Mitigation Assistance (FMA). Section 554 establishes the National Flood Mitigation Fund to provide assistance under Section 553. FMA regulations implement requirements of Section 553 and 554 of the Act.

FMA was developed to address concerns regarding repetitively or substantially damaged structures, or both, and the associated claims on the National Flood Insurance Fund. The overall goal of FMA is to fund cost-effective measures that reduce or eliminate the long-term risk of flood damage to buildings, manufactured homes, and other insurable structures.

The purpose of the planning grants is to develop or update a Flood Mitigation Plan that FEMA must approve before approving a project grant. Native American tribes or authorized tribal organizations may submit applications to the State POC or directly to the FEMA Regional Director.

The regulations outline a basic planning process with minimum standards for the Flood Mitigation Plans. Existing plans, such as those credited through the Community Rating System or those prepared in conformance with Section 322 of the Stafford Act, as amended by Section 104 of the Disaster Mitigation Act of 2000, may meet the requirements of FMA with few or no modifications. The plan should summarize the planning process, and should be reviewed periodically by the community in order to remain a viable document. Flood Mitigation Plans must be formally adopted by the legal entity submitting the plan for FEMA approval.

Collection of Information

Title: Flood Mitigation Assistance Program.

Type of Information Collection: Revisions of a currently approved collection.

OMB Number: 3067–0271.

Form Numbers: None.

Abstract: FMA Application Package. The State will use the local government's application for grant assistance to recommend to FEMA its preference for use of limited grant funds. FEMA will use the application to determine for which projects in which communities it will provide funding from among the limited annual appropriation. The application will provide FEMA sufficient information to determine whether the project meets the minimum eligibility criteria and objectively evaluate its merits.

Affected Public: State, Local, Tribal Government.

Estimated Total Annual Burden Hours: 2,069.

Estimated Cost: $36,518.

Comments: Written comments are solicited to (a) evaluate whether the proposed data collection is necessary for the proper performance of the agency, including whether the information shall have practical utility; (b) evaluate the accuracy of the agency's estimate of the burden of the proposed collection of information, including the validity of the methodology and assumptions used; (c) enhance the quality, utility, and clarity of the information to be collected; and (d) minimize the burden of the collection of information on those who are to respond, including through the use of appropriate automated, electronic, mechanical, or other technological collection techniques or other forms of information technology, e.g., permitting electronic submission of responses. Comments should be received within 60 days of the date of this notice.

ADDRESSES: Interested persons should submit written comments to Muriel B. Anderson, FEMA Information Collections Officer, Federal Emergency Management Agency, 500 C Street, SW., Room 311, Washington, DC 20472. Telephone number (202) 646–2625. FAX number (202) 646–3524.

FOR FURTHER INFORMATION CONTACT: Robert F. Shea, Mitigation Directorate, Federal Emergency Management Agency, 500 C Street, SW., Washington, DC 20472, (202) 646–3619, (facsimile) 202–646–3104 for additional information. Contact Ms. Anderson at (202) 646–2625 for copies of the proposed collection of information

Dated: July 29, 2002.

Reginald Trujillo,

Director, Program Services Division, Operations Support Directorate.

[FR Doc. 02–19754 Filed 8–5–02; 8:45 am]

BILLING CODE 6718–01–P

FEDERAL EMERGENCY MANAGEMENT AGENCY

Agency Information Collection Activities: Proposed Collection; Comment Request

ACTION: Notice and request for comments.

SUMMARY: The Federal Emergency Management Agency, as part of its continuing effort to reduce paperwork and respondent burden, invites the general public and other Federal agencies to take this opportunity to comment on proposed continuing information collections. In accordance with the Paperwork Reduction Act of 1995 (44 U.S.C. 3506(c)(2)(A)), this notice seeks comments concerning the application for participation in the National Flood Insurance Program (NFIP).

SUPPLEMENTARY INFORMATION: The NFIP is authorized by Public Law 90–448 (1968) and expanded by Public Law 93–234 (1973). Communities must make application for eligibility in the program by submitting the items listed on the enclosed ''prerequisites for the sale of flood insurance'' which is taken from section 59.22 CFR 44 of the NFIP regulations. Section 201 of the Flood Disaster Protection Act of 1973 requires all flood-prone communities throughout the country to apply for participation one year after their flood prone identification or submit to the prohibition of certain types of Federal and Federally-related financial assistance for use in their floodplains.

Collection of Information

Title: Application for Participation in the National Flood Insurance Program.

Type of Information Collection: Extension of a currently approved collection.

OMB Number: 3067–0020.

Form Number(s): FEMA Form 81–64.

Abstract: The NFIP provides flood insurance to communities that apply for participation and make a commitment to adopt and enforce land use control measures that are designed to protect development from future flood damages. The application form will enable FEMA to continue to rapidly process new community applications and to thereby more quickly provide flood insurance protection to the residents of the communities. Participation in the NFIP is mandatory in order for flood related Presidentially-declared communities to receive Federal disaster assistance.

Affected Public: State, Local or Tribal Governments.

Estimated Total Annual Burden Hours: 400 hours.

Estimated Cost: The estimated annual cost to the government is $21,000 for printing and mailing the forms to regional and state offices.

Comments: Written comments are solicited to (a) evaluate whether the proposed data collection is necessary for the proper performance of the agency, including whether the information shall have practical utility; (b) evaluate the accuracy of the agency's estimate of the burden of the proposed collection of information, including the validity of the methodology and assumptions used; (c) enhance the quality, utility, and clarity of the information to be collected; and (d) minimize the burden of the collection of information on those who are to respond, including through the use of appropriate automated, electronic, mechanical, or other technological collection techniques or other forms of information technology, e.g., permitting electronic submission of responses. Comments should be received within 60 days of the date of this notice.

ADDRESSES: Interested persons should submit written comments to Muriel B. Anderson, Chief, Records Management Section, Program Services and Systems Branch, Facilities Management and Services Division, Administration and Resource Planning Directorate, Federal Emergency Management Agency, 500 C Street, SW., Room 316, Washington, DC 20472.

FOR FURTHER INFORMATION CONTACT: Contact William Lesser, Program Specialist, Federal Insurance and Mitigation Administration, (202) 646–2807 for additional information. You may contact Ms. Anderson for copies of the proposed collection of information at telephone number (202) 646–2625 or facsimile number (202) 646–3347 or e-mail address: *information collections@fema.gov.*

Dated: July 30, 2002.

Reginald Trujillo,

Branch Chief, Program Services and Systems Branch, Facilities Management and Services Division, Administration and Resource Planning Directorate.

[FR Doc. 02–19755 Filed 8–5–02; 8:45 am]

BILLING CODE 6718–01–P

FEDERAL EMERGENCY MANAGEMENT AGENCY

Agency Information Collection Activities: Proposed Collection; Comment Request

ACTION: Notice and request for comments.

SUMMARY: The Federal Emergency Management Agency, as part of its continuing effort to reduce paperwork and respondent burden, invites the general public and other Federal agencies to take this opportunity to comment on a revision of a currently approved information collection. In accordance with the Paperwork Reduction Act of 1995 (44 U.S.C. 3506(c)(2)(A)), this notice seeks comments concerning State Plans for the administration of the Individual and Family Grant Program.

SUPPLEMENTARY INFORMATION: The State Administrative Plan for the Individual and Family Grant Program was established under the Robert T. Stafford Disaster Relief and Emergency Assistance Act, Pub. L. 93–288 as amended, section 411(a), and its implementing federal regulation 44 CFR 206.131. The Governor of a State administers the grant program in a State. The plan forms an agreement between the State and the Federal Emergency Management Agency (FEMA) to administer Individual Family Grants (IFG) according to national criteria, standards, and procedures for determination of disaster victims eligibility. The IFG program is intended to provide funds to individuals or families with disaster-related necessary expenses or serious needs, who are unable to meet such expenses or needs through other means.

Collection of Information

Title: State Administrative Plans for the Individual and Family Grant Program.

Type of Information Collection: Extension of a current approved collection.

OMB Number: 3067–0146.

Form Numbers: None.

Abstract: The Governor is required by law to administer the IFG Program and FEMA is required to publish regulations and procedures. FEMA carries out its role by requiring a State Plan which conforms to the regulations while allowing individual State procedural variations.

Affected Public: State, Local or Tribal Government.

ESTIMATED TOTAL ANNUAL BURDEN HOURS

FEMA forms	Number of respondents (A)	Frequency of response (B)	Hours per response (C)	Annual burden hours (A × B × C)
	56	1	3	168
Total	56	1	3	168

Estimated Cost: The average salary level for a State employee at a GS–9 to update a State Plan is estimated to be $2,773.68

Comments: Written comments are solicited to (a) evaluate whether the proposed data collection is necessary for the proper performance of the agency, including whether the information shall have practical utility; (b) evaluate the accuracy of the agency's estimate of the burden of the proposed collection of information, including the validity of the methodology and assumptions used; (c) enhance the quality, utility, and clarity of the information to be collected; and (d) minimize the burden of the collection of information on those who are to respond, including through the use of appropriate automated, electronic, mechanical, or other technological collection techniques or other forms of information technology, e.g., permitting electronic submission of responses. Comments should be received within 60 days of the date of this notice.

ADDRESSES: Interested persons should submit written comments to Muriel B. Anderson, Chief, Records Management Section, Program Services and Systems Branch, Facilities Management and Services Division, Administration and Resource Planning Directorate, Federal Emergency Management Agency, 500 C Street, SW., Room 316, Washington, DC 20472. Telephone number (202) 646–2625. Fax number (202) 646–3524.

FOR FURTHER INFORMATION CONTACT: Contact Sharon Hordesky, Emergency Management Specialist, Response and Recovery Directorate, Community and Family Services Branch, (202) 646–2778 for additional information. Contact Ms. Anderson at (202) 646–2625 for copies of the proposed collection of information or facsimile number (202) 646–3347 or e-mail address: *information collections@fema.gov.*

Dated: July 30, 2002.

Reginald Trujillo,

Director, Program Services and Systems Branch, Facilities Management and Services Division, Administration and Resource Planning Directorate.

[FR Doc. 02–19756 Filed 8–5–02; 8:45 am]

BILLING CODE 6718–01–P

FEDERAL EMERGENCY MANAGEMENT AGENCY

Agency Information Collection Activities: Proposed Collection; Comment Request

ACTION: Notice and request for comments.

SUMMARY: The Federal Emergency Management Agency (FEMA), as part of its continuing effort to reduce paperwork and respondent burden, invites the general public and other Federal agencies to take this opportunity to comment on an existing information collection in use without OMB approval. In accordance with the Paperwork Reduction Act of 1995 (44 U.S.C. 3506(C)(2)(A), this notice seeks comments on hotels and motels and other places of public accommodations meeting the fire safety requirements as identified in Public Law 101–391, Hotel and Motel Fire Safety Act of 1990.

SUPPLEMENTARY INFORMATION: Public Law 101–391 requires FEMA to establish and maintain a National Master List (NML) of fire safe hotels, motels and other places of public accommodation (property). This public law was enacted as a result of a number of major life-loss fires occurring in the late 1970's and 1980's. The purpose of this public law is to assure the traveling public of fire safe accommodations. Under Public Law 101–391, Federal employees on official travel are required to stay in properties approved and listed on the NML.

Collection of Information

Title: Federal Hotel and Motel Fire Safety Declaration Form.

Type of Information Collection: Existing collection in use without OMB approval.

Form Number: No number issued at this time.

Abstract: Public Law 101–391 requires FEMA to establish and maintain a National Master List (NML) of fire safe places of public accommodation. The information collected will be available electronically to the general public identifying properties meeting the specified level of fire safety equipment as required in the public law. It is also available to Federal employees required by Public Law 101–391 to stay at properties on the NML when on official travel.

Affected Public: Business or other for-Profit, Not-For-Profit Institutions, and the Federal Government.

No. of Respondents: 2,000.

Frequency of Response: On Occasion.

Hours Per Response: 0.25.

Estimated Total Annual Burden Hours: 500.

Estimated Cost: $10,000.00 per year. Rate of first level manager at $20.00 × 0.25 hour × 2,000 respondents.

Comments: Written comments are solicited to (a) evaluate whether the proposed data collection is necessary for the proper performance of the agency, including whether the information shall have practical utility; (b) evaluate the accuracy of the agency's estimate of the burden of the proposed collection of information, including the validity of the methodology and assumptions used; (c) enhance the quality, utility, and clarity of the information to be collected; and (d) minimize the burden of the collection of information on those who are to respond, including through the use of appropriate automated, electronic, mechanical, or other technological collection techniques or other forms of information technology, e.g., permitting electronic submission of responses. Comments should be received within 60 days of the date of this notice.

ADDRESSES: Interested persons should submit written comments to Muriel B. Anderson, Chief, Records Management Section, Program Services Systems Branch, Facilities Management and Services Division, Administration and Resource Planning Directorate, Federal Emergency Management Agency, 500 C Street, SW., Room 316, Washington, DC 20472.

FOR FURTHER INFORMATION CONTACT: Contact Timothy B. Ganley, Fire Program Specialist, United States Fire Administration, Federal Emergency Management Agency at 301–447–1358 for additional information. Contact Ms. Anderson at telephone number (202) 646–2625, facsimile number (202) 646–3347, or e-mail address: *muriel.anderson@fema.gov.* for copies of the proposed collection of information.

Dated: July 30, 2002.

Reginald Trujillo,

Branch Chief, Program Services and Systems Branch, Facilities Management and Services Division, Administration and Resource Planning Directorate.

[FR Doc. 02–19757 Filed 8–5–02; 8:45 am]

BILLING CODE 6718–01–P

FEDERAL EMERGENCY MANAGEMENT AGENCY

Agency Information Collection Activities: Proposed Collection; Comment Request

ACTION: Notice and request for comments.

SUMMARY: The Federal Emergency Management Agency, as part of its continuing effort to reduce paperwork and respondent burden, invites the general public and other Federal agencies to take this opportunity to comment on proposed revision of a currently approved information collection. In accordance with the Paperwork Reduction Act of 1995 (44 U.S.C. 3506(c)(2)(A)), this notice seeks comments concerning the community inspection report, which is the subject of this information collection submission. The community inspection report will be used in the implementation of the inspection procedure in the Monroe County, the City of Marathon, and the Village of Islamorada, Florida and any other community that incorporates in Monroe County on or after January 1, 1999. The inspection procedure has two major purposes: (1) To help the communities of Monroe County, City of Marathon, the Village of Islamorada, Florida, and any other communities in Monroe County that incorporate after January 1, 1999 verify that structures in their communities (those built after the effective date of the Flood Insurance Rate Map (FIRM), referred to as Post-FIRM) comply with the community's floodplain management ordinance; and (2) to ensure that property owners pay flood insurance premiums commensurate with their flood risk.

SUPPLEMENTARY INFORMATION: The community inspection report, which is the subject of this information collection submission, will be used in the implementation of the inspection procedure in the Monroe County, the City of Marathon, and the Village of Islamorada, Florida and any other community that incorporates in Monroe County on or after January 1, 1999. The inspection procedure has two major purposes: (1) To help the communities of Monroe County, City of Marathon, the Village of Islamorada, Florida, and any other communities in Monroe County that incorporate after January 1, 1999 verify that structures in their communities (those built after the effective date of the Flood Insurance Rate Map (FIRM), referred to as Post-FIRM) comply with the community's floodplain management ordinance; and (2) to ensure that property owners pay flood insurance premiums commensurate with their flood risk.

The National Flood Insurance Program (NFIP) was established by the National Flood Insurance Act of 1968 (Public law 90–448), as amended. The Flood Disaster Protection Act of 1973 (Public Law 93–234) and the National Flood Insurance Reform Act of 1994 (Public Law 103–325) made significant changes to the program. The primary purposes of the NFIP are to: (1) Better indemnify individuals for flood losses through insurance; (2) reduce future flood damages through state and community floodplain management regulations; and (3) reduce federal expenditures for disaster assistance and flood control. The NFIP makes Federally-backed flood insurance coverage available only in those communities that adopt and enforce a floodplain management ordinance to regulate new development in flood hazard areas. Over 19,000 communities participate in the NFIP.

The concept behind the program is that the communities would join the NFIP to make their citizens eligible to purchase subsidized flood insurance for existing buildings. It was recognized that insurance for many of these buildings would be prohibitively expensive if the premium were not subsidized. It was also recognized that most of these floodprone buildings were built by individuals that did not have sufficient knowledge of the hazard to make informed decisions.

In exchange for the availability of this subsidized insurance, communities would protect new construction through adoption and enforcement of community floodplain management ordinances. Owners of these new buildings (those built after the Federal Emergency Management Agency (FEMA) had identified flood hazards in the community) would pay actuarial rates for flood insurance that fully reflect the risk to the building.

Community floodplain management regulations require that residential buildings be elevated to or above the elevation of the base flood (the flood that has a 1 percent chance of occurring during any given year, also known as the 100-year flood). Non-residential buildings can either be elevated or floodproofed (made watertight) to the base flood. Without community oversight of building activities and development in the floodplain, the best efforts of some to reduce flood losses could be undermined or destroyed by the careless building of others. Community enforcement of a floodplain management ordinance is critical in

protecting a building from future flood damages, in reducing taxpayer funded disaster assistance, and also in keeping flood insurance rates affordable.

The purpose of the inspection procedures is to require owners of insured buildings (policyholders) to obtain an inspection from community floodplain management officials and submit a community inspection report as a condition of renewing the Standard Flood Insurance Policy (SFIP) on the building. The community inspection report, which is the subject of this information collection submission, will materially assist in reducing the number of buildings at risk to flood losses. The inspection procedure has two major purposes: (1) To help the pilot communities for this inspection procedure, Monroe County, City of Marathon, and the Village of Islamorada, Florida, and any community that incorporates after January 1, 1999 verify that structures in their communities (those built after the effective date of the FIRM, or post-FIRM) comply with the community's floodplain management ordinance; and (2) to ensure that property owners pay flood insurance premiums commensurate with their flood risk. Post-FIRM construction is charged an actuarial rate that must fully reflect the risk of flooding. The community inspection report will be needed to effectively implement the inspection procedure. The community inspection report will be used to document whether the insured building is in compliance with the community's floodplain management ordinance. The inspection report will also assist FEMA to ensure that property owners are paying flood insurance premiums commensurate with their flood risk.

Under the NFIP Floodplain Management Regulations at 44 CFR 60.3, all new construction and substantial improvements of structures in A Zones on the community's FIRM must have any enclosed areas below the lowest floor of an elevated building designed to include openings to equalize hydrostatic flood pressure on exterior walls by allowing for the automatic entry and exit of floodwaters. In V Zones, new construction and substantial improvements must have the space below the lowest floor either free of obstruction or constructed with open wood lattice-work, insect screening, or non-supporting breakaway walls, intended to collapse under wind and water loads without causing collapse, displacement, or other structural damage to the elevated portion of the building or supporting foundation system. In both A and V Zones on the community's FIRM, the area below the lowest floor of an elevated building can only be used for parking of vehicles, building access, or storage.

In addition, owners must build the area below the lowest floor of an elevated building using flood resistant materials and must use construction methods and practices that minimize flood damages. Owners must also build with electrical, ventilation, plumbing, and air conditioning equipment and other service facilities that are designed or located so as to prevent water from entering or accumulating within the components during conditions of flooding.

FEMA conducted a Community Assistance Visit (CAV) in Monroe County, Florida, in 1982, 1987, and in 1995. The purpose of a CAV is to assess an NFIP community's floodplain management program and to provide whatever assistance the community needs to administer its floodplain management ordinance effectively when program deficiencies or violations are identified. One of the more serious problems that FEMA identified through the CAVs was the apparent widespread use of the enclosed area below the lowest floor of elevated buildings for uses other than parking of vehicles, building access, or storage. Follow-up contacts with Monroe County had indicated that it was unable to identify possible violations and remedy violations identified.

There are several factors that have limited Monroe County's ability to determine whether a building with an enclosure complies with the county's floodplain management ordinance: (1) A provision in Florida laws exempts ''owner-occupied family residences'' from the administrative warrant inspection procedure provided under State law for identifying building-safety issues. Under Florida State law, entry by local officials into owner-occupied single family homes without consent of the owner requires a search warrant, which is extremely difficult to obtain. (2) It is often difficult from the street to determine whether the enclosed area below an elevated building contains uses other than parking of vehicles, building access, or storage. Although the County can seek consent and approval of the owner to inspect their property, the community has had limited success in identifying violations using this method. (3) The volume of possible violations is also a contributing factor in the community's ability to address this problem. Monroe County estimated that there are several thousand buildings with illegal enclosures below the lowest floor of an elevated building. Consequently, the community has had little success in identifying possible violations so that it could then require actions to remedy the violations to the maximum extent possible.

Given these circumstances, Monroe County indicated its interest in participating in an inspection procedure. In January 1997, a Monroe County Citizen's Task Force, which was appointed by the Monroe County Board of County Commissioners to address the issue of illegal enclosures below the lowest floor of an elevated building, recommended establishment of a procedure to require an inspection and a compliance report prior to the renewal of a flood insurance policy. On June 11, 1998, the Board of County Commissioners of Monroe County, Florida, passed a resolution that requested FEMA to establish an inspection procedure for the County as a means of verifying that insured buildings in the Special Flood Hazard Area under the NFIP comply with the County's floodplain management ordinance.

The Village of Islamorada incorporated as a separate community within Monroe County in January 1998 and became a separate participating NFIP community on October 1, 1998. The Village of Islamorada encompasses four of the Florida Keys that would have been included as part of the inspection procedure in Monroe County. Because of possible illegal enclosures in the Village of Islamorada, the community indicated its interest in participating in the pilot inspection procedure in a letter dated September 24, 1998, in its application to join the NFIP.

The City of Marathon incorporated as a separate community within Monroe County on November 2, 1999 and became a separate participating NFIP community on October 16, 2000. The City of Marathon encompasses 12 miles of the Florida Keys that would have been included as part of the inspection procedure in Monroe County. Because of possible illegal enclosures in the City of Marathon, the community indicated its interest in participating in the pilot inspection procedure in a resolution titled, ''A Resolution of the City Council of the City of Marathon, Florida, Providing for Approval of the City's Participation in the National Flood Insurance Program's Pilot Inspection Program and Providing for an Effective Date'', which was passed and adopted on September 13, 2000.

An interim final rule was published in the **Federal Register** on March 8, 2002 (67 FR 10631) that amended the NFIP regulations to clarify that areas of Monroe County that incorporate on or

after January 1, 1999, and become eligible for the sale of flood insurance must participate in the inspection procedures as a condition of joining the NFIP. This requirement was specifically stated in the supplementary of the proposed rule (published in the **Federal Register** on May 5, 1999, 64 FR 24256) and in the final rule (published in the **Federal Register** on June 27, 2000, 65 FR 39726) establishing the inspection procedure. However, this requirement was not clearly stated in the Appendices (A)(4), (A)(5), and (A)(6) of 44 CFR part 61, the endorsements to the Standard Flood Insurance Policy. The interim final rule amended 44 CFR 59.30 and the appendices to make clearer that participation in the inspection procedures is a requirement for any area within Monroe County that incorporates on or after January 1, 1999. FEMA will publish notices in the **Federal Register** when communities in Monroe County incorporate, agree to implement the pilot inspection procedure, and become eligible for the sale of flood insurance.

Due to the fact that there has been widespread use of the enclosed area below the lowest floor of elevated buildings for uses other than parking of vehicles, building access or storage, the community inspection report will materially assist the communities in identifying and remedying the violation, thereby reduce the number of buildings exposed to significant flood losses. Furthermore, the collection of information will help FEMA ensure that the policyholders of buildings with illegal enclosures are paying premiums commensurate with their flood risk.

The inspection procedure will be conducted in the communities of Monroe County, City of Marathon, the Village of Islamorada, and any other community in Monroe County that incorporates after January 1, 1999. FEMA would make any decision to implement the inspection procedure in NFIP participating communities outside Monroe County only after completing the pilot inspection procedure within the selected communities and after an evaluation to determine how effective the procedure is in achieving NFIP building compliance. Implementation of the inspection procedure beyond Monroe County would require separate rulemaking and preparation of supporting materials for Paperwork Reduction Act submissions.

Collection of Information

Title: Inspection of Insured Structures by Communities.

Type of Information Collection: Revision of a currently approved collection.

OMB Number: 3067–0275.

Abstract: The purpose of the inspection procedure and need for the community inspection report is to:

(1) To help the communities of Monroe County, City of Marathon, the Village of Islamorada, Florida, and any other community in Monroe County that incorporates after January 1, 1999 verify and document that post-FIRM structures in their communities comply with the community's floodplain management ordinance; and

(2) To ensure that property owners pay flood insurance premiums commensurate with their flood risk due to the increased exposure to flood damages.

The final rule (published in the **Federal Register** on June 27, 2000, 65 FR 39726) and the interim final rule (published in the **Federal Register** on March 8, 2002, 67 FR 10631) established an inspection procedure in Monroe County, City of Marathon, the Village of Islamorada, Florida and any other community in Monroe County that incorporates after January 1, 1999 that would be built around the flood insurance policy renewal process. The requirement that a building be inspected by the community, as a condition of renewing the flood insurance policy on the building, would *only* apply to NFIP insured buildings in Special Flood Hazard Areas that are identified as possible violations by the community in which the property is located. The Special Flood Hazard Areas (SFHA) is an area that is based on a flood that would have a 1-percent chance of being equaled or exceeded in any given year, referred to as the 100-year flood.

Policyholders that have a flood insurance policy with a renewal effective date on and after the implementation date of the pilot inspection procedure would receive, along with their policy renewal notice, an endorsement established in Appendices (A)(4), (A)(5), and (A)(6) of 44 CFR part 61. The endorsement would provide that an inspection by the community may be required before a subsequent renewal of the flood insurance policy. Policies issued as new policies after the effective date for implementing the pilot inspection procedure would also contain the endorsement established in Appendices (A)(4), (A)(5), and (A)(6). The endorsement amended all flood insurance policies (pre-FIRM and post-FIRM) on buildings in Monroe County, City of Marathon, and the Village of Islamorada, Florida (there are approximately 28,771 flood insurance policies in these communities at the time of this submission). Pre-FIRM insured buildings are included for the endorsement since there may be some policies within this category that should be rated post-FIRM because they were misrated or substantially improved after the effective date of the community's FIRM. A notice describing the purpose of the inspection procedure would accompany the new endorsement to the Standard Flood Insurance Policy regarding the inspection procedure.

Monroe County, City of Marathon, and the Village of Islamorada would identify possible violations and forward the list to FEMA. There are an estimated 2,000–4,000 number of insured buildings within the three communities that may be subject to an inspection based on the identification as possible violations. This estimate was reported to FEMA from the communities. Based on FEMA's review of floodplain development in these communities, FEMA is comfortable with this estimate.

Monroe County, City of Marathon, and the Village of Islamorada would identify possible violations through a review of the pre-FIRM and post-FIRM flood insurance policies provided by FEMA and from a visual street inspection of the building, from tax records, and through a review of other documents on file in the community pertaining to the property and through other community procedures. For buildings identified by Monroe County, City of Marathon, and the Village of Islamorada as possible violations, the insurer of the flood insurance policy would send a notice to policyholders approximately 6 months before the policy expiration date. This notice would state that the policyholder must obtain an inspection from the community and submit the results of the property inspection as part of the renewal of the flood insurance policy by the end of the renewal grade period (30 days after date of the policy expiration). The insurer would send a reminder notice to the policyholder with the Renewal Notice about 45 to 60 days before the policy expires.

The policyholder would be responsible for contacting the community to arrange for an inspection. The community would inspect the building to determine whether it complies with the community's floodplain management ordinance and document its findings in an inspection report. The community would provide two copies of the inspection report to the policyholder.

If the policyholder obtained a timely inspection and sent the community's inspection report and the renewal premium payment to the insurer by the end of the renewal grace period, the

insurer would renew the flood insurance policy whether or not the building has been identified as a violation by the community. The insurer would review the insurance policy for rerating upon review of the community inspection report. If the building was not properly rated to reflect the building's risk of flooding, the policy would be rerated to reflect that risk. If the community's inspection found a violation, the community would undertake an enforcement action in accordance with its floodplain management ordinance.

If the policyholder did not obtain an inspection and submit an inspection report with the renewal premium payment by the end of the renewal grace period (30 days after date of expiration), the flood insurance policy would not be renewed. The insurer would send a notice to the insured that the flood insurance policy expired and cannot be re-issued without the community inspection report.

The communities will not be using a FEMA designed form in documenting the inspection of an insured structure. FEMA consulted with local officials from the communities participating in the inspection procedure on the type of existing building inspection reports they use to implement their floodplain management ordinance and we determined that the current community inspection documents could be used for purposes of implementing the inspection procedure and for purposes of determining whether the building's flood insurance policy needs to be rerated by insurer.

The community inspection report is critical to the effective implementation of the inspection procedure. Without the inspection procedure, the Village of Islamorada, City of Marathon, and Monroe County would continue to have limited ability to inspect properties for illegal enclosures that violate their floodplain management ordinance and as a result, both communities would be unable to undertake appropriate actions to remedy the violations. There are several potential serious consequences if these structures continue to be in violation of the community's floodplain management ordinance.

Allowing uses other than parking of vehicles, building access, or storage in the enclosed area below the Base Flood Elevation (elevation of the 100-year flood) significantly increases the flood damage potential to the area below the lowest floor of the elevated building. Improperly constructed enclosure walls and utilities can tear away and damage the upper portions of the elevated building exposing the building to greater damage. Improperly constructed enclosures can also result in flood forces being transferred to the elevated portion of the building with the potential for catastrophic damage. If a flood disaster occurs, the impact will go beyond the building itself. If the ground level enclosure is finished with living spaces, there is an increased risk to lives. Residents who live in these ground level enclosures may not be fully aware of the flood risk.

Furthermore, there is limited coverage in this area for elevated post-FIRM buildings, as provided for in the Standard Flood Insurance Policy (SFIP) under Article 6—Property Not Covered. This provision of the SFIP, effective since October 1, 1983, limits coverage for enclosures, including personal property contained therein. FEMA does not cover such items as finished enclosure walls, floors, ceilings, and personal property such as rugs, carpets, and furniture. In 1983, FEMA limited the coverage for enclosed areas below elevated buildings due to the financial losses experienced in the NFIP when FEMA provided full coverage in these areas. Consequently, property owners and residents that may live in these lower enclosed areas may have significant uninsured losses in the event of a flood for finished items and contents below the lowest floor.

However, in spite of the limited coverage afforded for these enclosed areas, they do affect the rating of the policy. Because of the increase in flood damage potential to the building resulting from flood forces being transferred to the elevated portion of the building, the damage potential must be recognized in the rates by adding rate loadings based on the size of the enclosure. In addition, the rates must also reflect whether the enclosure contains essential building elements which are covered, namely, sump pumps, well water tanks and pumps, electrical junction and circuit breaker boxes, elevators, natural gas tanks, pumps or tanks related to solar energy, cisterns, stairways and staircases attached to the building, and foundation elements that support the building. The collection of information from the policyholder in the inspection procedure will ensure that the policyholders of buildings with enclosures are paying premiums commensurate with their flood risk.

Along with significant flood damages to the building and the potential for loss of life, the community, the State, and the Federal Government will be faced with costly outlays for flood fighting and rescue operations, response, and recovery as well as taxpayer funded disaster assistance.

Under the inspection procedure, the policyholder will be required to obtain an inspection in order to renew the policy. This will be a one-time collection of information during the period of time for which the inspection procedure is to be implemented. Since the primary purpose of the inspection is to provide communities with a mechanism to ensure compliance with the floodplain management ordinance and for FEMA to verify flood insurance rates, less frequent collection of the information through the inspection report is not possible.

Affected Public: Individuals or Households and Business or Other For-Profit.

Estimated Total Annual Burden Hours: We expect a total of 2,000 to 4,000 respondents (policyholders) to obtain an inspection from the community in which the property is located. This is the total estimated number of insured buildings that are possible violations of the community's floodplain management ordinance in Monroe County, City of Marathon, and the Village of Islamorada. The burden hours are calculated based on the maximum number of estimated respondents (4,000 insured buildings). Monroe County, City of Marathon, and the Village of Islamorada will identify which insured buildings are possible violations of the community's floodplain management ordinance. It is anticipated that the inspection procedure will be implemented over a multi-year period in each community in order to inspect several hundred insured buildings identified as possible violations each year.

It is estimated that Monroe County will inspect 500–700 insured buildings per year, the City of Marathon will inspection 200–400 insured buildings per year, and the Village of Islamorada will inspect 200–400 insured buildings per year.

The policyholders of insured buildings identified as possible violations by the community will receive a notice from their insurer approximately 6 months before the policy expiration date. This notice will state that the policyholder must obtain an inspection from the community and submit the results of the inspection as part of the renewal of the flood insurance policy by the end of the renewal grace period (30 days after date of the policy expiration). In addition, for each of the 2,000–4,000 insured buildings identified as a possible violation of the community's floodplain

management ordinance, the following will apply:

• The policyholder will receive a reminder notice from the insurer regarding the inspection with the Renewal Notice about 45 to 60 days before the policy expires.

• The policyholder is responsible for contacting the community to arrange for an inspection by a local official in the community in which the property is located.

• The policyholder will receive two copies of the inspection report from the community and submit one copy of the inspection report as part of the policy renewal process, which includes the payment of the premium.

• If the policyholder did not obtain an inspection and submit an inspection report with the renewal payment by the end of the renewal grade period (30 days after date of expiration), the flood insurance policy would not be renewed. The insurer would send a notice at expiration or shortly thereafter to the policyholder that the flood insurance policy expired and cannot be re-issued without the community inspection report.

The flood insurance renewal notice and flood insurance application have previously been approved by OMB (OMB 3067–0022).

Number of respondents/type of response	Frequency of response	Burden hours	Total burden hours
4,000 policyholders to receive & read a notice that an inspection is required in order for the flood insurance policy to be renewed. These 4,000 policyholders will also receive a reminder notice about 45–60 days before the policy expires.	1	15 minutes (total for both notices).	1,000
4,000 policyholders contact respective community to arrange for an inspection of the property. Local official inspects the property with the policyholder or his/her designee. (Note: in any given year we expect several hundred policyholders to receive the notice and contact their community.) Compliant buildings should take less time to inspect compared to an insured building that is non-compliant.	1	1–2.5 hours**	10,000
4,000 policyholders submit a copy of the inspection report with the renewal premium payment.	1	8 minutes	533
800 estimated no. of respondents that did not obtain an inspection. These respondents will be sent a notice at time of policy expiration that their flood insurance policy expired. (FEMA estimates that less than 20% of the 4,000 respondents will not obtain an inspection and as a result their flood insurance policy will not be renewed.).	1	8 minutes	107
Total number of Burden Hours to implement the inspection procedure over a multi-year period*			11,640
Annual (one-time) total burden hours for each policyholder is approximately			3
Total annual burden for approximately 500–700 inspections per year in Monroe County			2,100
Total annual burden for approximately 200–400 inspections per year in the Village of Islamorada			1,200
Total annual burden for approximately 200–400 inspections per year in the City of Marathon			1,200 hours

* It is estimated that 2,000–4,000 buildings will need to be inspected over a multi-year period. On an annual basis, it is estimated that 900–1,500 buildings will be inspected each year when you combine the estimated annual inspections to be conducted by each community. The total number of inspections would not change with the incorporation of any community within Monroe County that joins the National Flood Insurance Program and agrees to participate in the inspection procedure after January 1, 1999. The estimated total number of inspections (2,000–4,000) remains the same. The addition of any other community only offsets the total number, burden hours, and costs in Monroe County.

** FEMA has estimated that the amount of time to contact the community to arrange for the inspection and for the policyholder or his/her designee to be available to let the community official into the building to conduct the inspection will range from 1 hour to 2.5 hours.

Estimated Cost: Communities generally charge a fee for permits and inspections as part of their administration of their zoning ordinance, building code, and floodplain management ordinance. It is estimated that it will cost the policyholder on average between $35 to $50.00 for each inspection. There may be expenses related to telephone calls and arranging for someone to be available at the property so that local officials can inspect the building. These expenses are estimated to be on average $15.00 per respondent. Therefore, policyholders who are required to obtain an inspection as a condition of renewing the flood insurance policy and who obtain that inspection, it is estimated to cost on average $65.00 per policyholder. For approximately 900 to 1,500 inspections per year, the total annual cost burden to respondents is estimated to be between $58,500 and $97,500.

Comments: Written comments are solicited to (a) evaluate whether the proposed data collection is necessary for the proper performance of the agency, including whether the information shall have practical utility; (b) evaluate the accuracy of the agency's estimate of the burden of the proposed collection of information, including the validity of the methodology and assumptions used; (c) enhance the quality, utility, and clarity of the information to be collected; and (d) minimize the burden of the collection of information on those who are to respond, including through the use of appropriate automated, electronic, mechanical, or other technological collection techniques or other forms of information technology, e.g., permitting electronic submission of responses. Comments should be received within 60 days of the date of this notice.

ADDRESSES: Interested persons should submit written comments to Muriel B. Anderson, Chief, Records Management Section, Program Services and Systems Branch, Facilities Management and Services Division, Administration and Resource Planning Directorate, Federal Emergency Management Agency, 500 C Street, SW., Room 316, Washington, DC 20472.

FOR FURTHER INFORMATION CONTACT: Contact Lois C. Forster, Program Specialist, Federal Insurance and Mitigation Administration, (202) 646–2720 for additional information. You may contact Ms. Anderson for copies of the proposed collection of information at telephone number (202) 646–2625 or facsimile number (202) 646–3347 or e-mail *muriel.Anderson@fema.gov.*

Dated: July 29, 2002.

Reginald Trujillo,

Branch Chief, Program Services and Systems Branch, Facilities Management and Services Division, Administration and Resource Planning Directorate.

[FR Doc. 02–19758 Filed 8–5–02; 8:45 am]

BILLING CODE 6718–01–P

FEDERAL EMERGENCY MANAGEMENT AGENCY

[FEMA–1426–DR]

Guam; Amendment No. 2 to Notice of a Major Disaster Declaration

AGENCY: Federal Emergency Management Agency (FEMA).

ACTION: Notice.

SUMMARY: This notice amends the notice of a major disaster declaration for the Territory of Guam (FEMA–1426–DR), dated July 6, 2002, and related determinations.

EFFECTIVE DATE: July 25, 2002.

FOR FURTHER INFORMATION CONTACT: Rich Robuck, Readiness, Response and Recovery and Directorate, Federal Emergency Management Agency, Washington, DC 20472, (202) 646–2705 or *Rich.Robuck@fema.gov.*

SUPPLEMENTARY INFORMATION: The notice of a major disaster declaration for the Territory of Guam is hereby amended to include Categories C through G under the Public Assistance program for the Territory of Guam determined to have been adversely affected by the catastrophe declared a major disaster by the President in his declaration of July 6, 2002:

The Territory of Guam for Categories C through G under the Public Assistance program (already designated for debris removal and emergency protective measures (Categories A and B), including direct Federal assistance at 75 percent Federal funding and Individual Assistance).

(The following Catalog of Federal Domestic Assistance Numbers (CFDA) are to be used for reporting and drawing funds: 83.537, Community Disaster Loans; 83.538, Cora Brown Fund Program; 83.539, Crisis Counseling; 83.540, Disaster Legal Services Program; 83.541, Disaster Unemployment Assistance (DUA); 83.542, Fire Suppression Assistance; 83.543, Individual and Family Grant (IFG) Program; 83.544, Public Assistance Grants; 83.545, Disaster Housing Program; 83.548, Hazard Mitigation Grant Program.)

Joe M. Allbaugh,

Director.

[FR Doc. 02–19760 Filed 8–5–02; 8:45 am]

BILLING CODE 6718–02–P

FEDERAL EMERGENCY MANAGEMENT AGENCY

[FEMA–1427–DR]

Federated States of Micronesia; Amendment No. 1 to Notice of a Major Disaster Declaration

AGENCY: Federal Emergency Management Agency (FEMA).

ACTION: Notice.

SUMMARY: This notice amends the notice of a major disaster declaration for the Federated States of Micronesia (FEMA–1427–DR), dated July 11, 2002, and related determinations.

EFFECTIVE DATE: July 26, 2002.

FOR FURTHER INFORMATION CONTACT: Rich Robuck, Readiness, Response and Recovery and Directorate, Federal Emergency Management Agency, Washington, DC 20472, (202) 646–2705 or *Rich.Robuck@fema.gov.*

SUPPLEMENTARY INFORMATION: The notice of a major disaster declaration for the Federated States of Micronesia is hereby amended to include Individual Assistance and Categories C through G under the Public Assistance program for Chuuk State determined to have been adversely affected by the catastrophe declared a major disaster by the President in his declaration of July 11, 2002:

Chuuk State for Individual Assistance and Categories C through G under the Public Assistance program (already designated for debris removal and emergency protective measures (Categories A and B), including direct Federal Assistance at 75 percent Federal funding.

(The following Catalog of Federal Domestic Assistance Numbers (CFDA) are to be used for reporting and drawing funds: 83.537, Community Disaster Loans; 83.538, Cora Brown Fund Program; 83.539, Crisis Counseling; 83.540, Disaster Legal Services Program; 83.541, Disaster Unemployment Assistance (DUA); 83.542, Fire Suppression Assistance; 83.543, Individual and Family Grant (IFG) Program; 83.544, Public Assistance Grants; 83.545, Disaster Housing Program; 83.548, Hazard Mitigation Grant Program.)

Joe M. Allbaugh,

Director.

[FR Doc. 02–19761 Filed 8–5–02; 8:45 am]

BILLING CODE 6718–02–P

FEDERAL EMERGENCY MANAGEMENT AGENCY

[FEMA–1425–DR]

Texas; Amendment No. 9 to Notice of a Major Disaster Declaration

AGENCY: Federal Emergency Management Agency (FEMA).

ACTION: Notice.

SUMMARY: This notice amends the notice of a major disaster declaration for the State of Texas (FEMA–1425–DR), dated July 4, 2002, and related determinations.

EFFECTIVE DATE: July 23, 2002.

FOR FURTHER INFORMATION CONTACT: Rich Robuck, Readiness, Response and Recovery and Directorate, Federal Emergency Management Agency, Washington, DC 20472, (202) 646–2705 or *Rich.Robuck@fema.gov.*

SUPPLEMENTARY INFORMATION: The notice of a major disaster declaration for the State of Texas is hereby amended to include the following areas among those areas determined to have been adversely affected by the catastrophe declared a major disaster by the President in his declaration of July 4, 2002:

Frio, Gonzales, Karnes, Live Oak, McMullen, Real, and Zavala Counties for Public Assistance (already designated for Individual Assistance).

San Saba County for Public Assistance.

(The following Catalog of Federal Domestic Assistance Numbers (CFDA) are to be used for reporting and drawing funds: 83.537, Community Disaster Loans; 83.538, Cora Brown Fund Program; 83.539, Crisis Counseling; 83.540, Disaster Legal Services Program; 83.541, Disaster Unemployment Assistance (DUA); 83.542, Fire Suppression Assistance; 83.543, Individual and Family Grant (IFG) Program; 83.544, Public Assistance Grants; 83.545, Disaster Housing Program; 83.548, Hazard Mitigation Grant Program.)

Joe M. Allbaugh,

Director.

[FR Doc. 02–19759 Filed 8–5–02; 8:45 am]

BILLING CODE 6718–02–P

FEDERAL EMERGENCY MANAGEMENT AGENCY

[FEMA–1428–DR]

Vermont; Amendment No. 1 to Notice of a Major Disaster Declaration

AGENCY: Federal Emergency Management Agency (FEMA).

ACTION: Notice.

SUMMARY: This notice amends the notice of a major disaster declaration for the State of Vermont, (FEMA–1428–DR), dated July 12, 2002, and related determinations.

EFFECTIVE DATE: July 26, 2002.

FOR FURTHER INFORMATION CONTACT: Rich Robuck, Readiness, Response and Recovery and Directorate, Federal Emergency Management Agency, Washington, DC 20472, (202) 646–2705 or Rich.Robuck@fema.gov.

SUPPLEMENTARY INFORMATION: The notice of a major disaster declaration for the State of Vermont is hereby amended to include the following area among those areas determined to have been adversely affected by the catastrophe declared a major disaster by the President in his declaration of July 12, 2002:

Lamoille County for Public Assistance (already designated for Individual Assistance).

(The following Catalog of Federal Domestic Assistance Numbers (CFDA) are to be used for reporting and drawing funds: 83.537, Community Disaster Loans; 83.538, Cora Brown Fund Program; 83.539, Crisis Counseling; 83.540, Disaster Legal Services Program; 83.541, Disaster Unemployment Assistance (DUA); 83.542, Fire Suppression Assistance; 83.543, Individual and Family Grant (IFG) Program; 83.544, Public Assistance Grants; 83.545, Disaster Housing Program; 83.548, Hazard Mitigation Grant Program.)

Joe M. Allbaugh,

Director.

[FR Doc. 02–19762 Filed 8–5–02; 8:45 am]

BILLING CODE 6718–02–P

FEDERAL EMERGENCY MANAGEMENT AGENCY

Competitive Pre-Disaster Mitigation Grant Process

AGENCY: Federal Insurance and Mitigation Administration, Federal Emergency Management Agency.

ACTION: Notice and request for comments.

SUMMARY: The President's Fiscal Year (FY) 2003 budget proposal includes $300 million under the National Pre-Disaster Mitigation Fund to initiate a competitive grant program for pre-disaster mitigation. While Congress has not acted on the President's proposal, the Federal Emergency Management Agency (FEMA) is preparing to implement the program competitively if enacted by Congress. As part of a preliminary exploration of the issues, FEMA is soliciting ideas from all interested parties on the process for implementing the grant program on a competitive basis. During the comment period, FEMA also will hold meetings on this subject with invited representatives from the State and local stakeholders and overall emergency management profession for the purpose of obtaining a variety of individual opinions.

DATES: Comments must be received by September 30, 2002.

ADDRESSES: Please send written comments to the Rules Docket Clerk, Office of the General Counsel, Federal Emergency Management Agency, 500 C Street, SW., room 840, Washington DC 20472, (facsimile) 202–646–4536, or (e-mail) *rules@fema.gov.*

FOR FURTHER INFORMATION CONTACT: Terry Baker, Federal Emergency Management Agency, Federal Insurance and Mitigation Administration, 500 C Street, SW., Washington, DC 20472, (202) 646–4648 or e-mail *Terry.Baker@fema.gov.*

SUPPLEMENTARY INFORMATION: The President's FY 2003 budget proposal includes $300 million to initiate a competitive pre-disaster mitigation grant program, which would replace the formula-based Hazard Mitigation Grant Program for FY 2003.

This proposed funding would represent a change in funding source for mitigation (annual funding versus funding linked to disasters), but would continue to support the goals of the Disaster Mitigation Act of 2000. While there are specific mitigation opportunities that occur immediately after a disaster, an annual grant program that provided a consistent source of funding would allow States and communities to develop more comprehensive proposals and projects to reduce their overall risks. Communities would no longer be dependent on a disaster declaration in order to obtain a FEMA mitigation grant. However, FEMA would continue to work with State and local governments to take advantage of post-disaster mitigation opportunities.

The President's budget proposal outlines a program whereby grants would be awarded on a competitive basis to ensure that the most worthwhile, cost-beneficial projects receive funding. Funded activities would reduce the risks of future damage in hazard prone areas, thereby reducing the need for future disaster assistance. Grant awards would be made without reference to State allocations, quotas or other formula-based allocation of funds. Consistent with funding available under the FY 2002 Pre-Disaster Mitigation grant program, authorized by § 203 of the Robert T. Stafford Disaster Assistance and Emergency Relief Act, eligible activities under a competitive grant program would include: risk assessments; State and local mitigation planning; the reinforcement of structures against seismic, wind, and other hazards; elevation, acquisition, or relocation of flood-prone structures; and minor flood control or drainage management projects.

State emergency management authorities currently play an essential role in the implementation of all of FEMA mitigation grant programs. They provide technical assistance to communities, solicit and review applications, and coordinate statewide mitigation activities. FEMA's Pre-Disaster Mitigation implementation strategy will include the States, and we will collaborate with our State and local partners and stakeholders to develop a means for competitive review of grant proposals.

Although FEMA does not know whether this proposal for a competitive pre-disaster mitigation grant program will be included in the FY 2003 appropriations or what our authority will be in implementing such a program, we would like to prepare for the possibility by gathering comments on the proposal from our partners and stakeholders. In preliminary exploration of the issues surrounding design of the President's proposed Competitive Pre-Disaster Mitigation grant program, FEMA is soliciting responses to the following questions:

1. What key factors should FEMA consider in developing a competitive grant program?

2. What role should the States play in a competitive grant process?

3. If FEMA was authorized to set aside funds for States in addition to the competitive process, do you think there should be a set aside that States could depend on annually to maintain a level of capability in mitigation? What types of activities should be eligible for such funding?

4. Should mitigation planning funds be set aside for States in addition to competitive pre-disaster mitigation grants?

5. How could FEMA ensure that funds would be spent to address all hazards?

6. Should activities addressing multi-hazard vs. single hazard be more heavily weighted in a ranking system?

7. What methodologies could FEMA use to distribute funding based on risk?

8. How could the evaluation of applications be designed to ensure that the most worthwhile, cost-beneficial projects receive funding?

9. What should FEMA consider in addition to cost benefit analysis in developing a ranking system to evaluate applications (e.g., repetitive loss, life safety)?

10. What factors does FEMA need to consider in developing a process where agencies such as departments of economic development or natural resources were encouraged to engage in natural hazard risk reduction by applying for a competitive pre-disaster mitigation grant?

11. Should there be a cap on project costs in order to ensure a broader distribution of funds? How would a project cap amount be determined?

Dated: July 31, 2002.

Robert F. Shea,

Deputy Administrator for Mitigation, Federal Insurance and Mitigation Administration.

[FR Doc. 02–19792 Filed 8–5–02; 8:45 am]

BILLING CODE 6718–04–P

BOARD OF GOVERNORS OF THE FEDERAL RESERVE SYSTEM

Sunshine Act Meeting

AGENCY HOLDING THE MEETING: Board of Governors of the Federal Reserve System.

TIME AND DATE: 12:00 p.m., Monday, August 12, 2002.

PLACE: Marriner S. Eccles Federal Reserve Board Building, 20th and C Streets, NW., Washington, DC 20551.

STATUS: Closed.

MATTERS TO BE CONSIDERED:

1. Personnel actions (appointments, promotions, assignments, reassignments, and salary actions) involving individual Federal Reserve System employees.
2. Any items carried forward from a previously announced meeting.

FOR FURTHER INFORMATION CONTACT: Michelle A. Smith, Assistant to the Board; 202–452–2955.

SUPPLEMENTARY INFORMATION: You may call 202–452–3206 beginning at approximately 5 p.m. two business days before the meeting for a recorded announcement of bank and bank holding company applications scheduled for the meeting; or you may contact the Board's Web site at *http://www.federalreserve.gov* for an electronic announcement that not only lists applications, but also indicates procedural and other information about the meeting.

Dated: August 2, 2002.

Jennifer J. Johnson,

Secretary of the Board.

[FR Doc. 02–20015 Filed 8–2–02; 3:43 pm]

BILLING CODE 6210–01–P

DEPARTMENT OF HEALTH AND HUMAN SERVICES

Agency for Toxic Substances and Disease Registry

Community and Tribal Subcommittee of the Board of Scientific Counselors, Agency for Toxic Substances and Disease Registry: Meeting

In accordance with section 10(a)(2) of the Federal Advisory Committee Act (Pub. L. 92–463), the Agency for Toxic Substances and Disease Registry (ATSDR) announces the following subcommittee and committee meetings.

Name: Community and Tribal Subcommittee.

Times and Dates: 9 a.m.–4:30 p.m., August 29, 2002.

8:30 a.m.–2 p.m., August 30, 2002.

Place: Radisson Inn, 2061 N. Druid Hills Road, Atlanta, Georgia 30329.

Status: Open to the public, limited by the available space. The meeting room accommodates approximately 50 people.

Purpose: This subcommittee brings to the Board advice, citizen input, and recommendations on community and tribal programs, practices, and policies of the Agency.

Matters To Be Discussed: Agenda items include an update on Thermal Treatment Technologies; presentation on National Environmental Justice Advisory Council; presentation by the ATSDR's Ombudsman; overview of the Federal Advisory Committee Act; update on the CTS Review Process; discussion on Recommendations from Special Consultants' Caucus; breakout sessions to discuss Cultural Sensitivity Activities, education training and development of Toolbox; evaluation of Public Health Assessments for compliance to Guidelines; review of Action Items; and a report on the nomination of four new Special Consultants.

Written comments are welcomed and should be received by the contact person listed below prior to the opening of the meeting.

Agenda items are subject to change as priorities dictate.

Contact Person for More Information: Ruby L. Palmer, Designated Federal Official, CTS/ATSDR contact, ATSDR, M/S E–54, 1600 Clifton Road, NE., Atlanta, Georgia 30333, telephone 404/498–1749.

The Director, Management Analysis and Services Office, has been delegated the authority to sign **Federal Register** notices pertaining to announcements of meetings and other committee management activities for both the Centers for Disease Control and Prevention and the Agency for Toxic Substances and Disease Registry.

Dated: July 29, 2002.

John C. Burckhardt,

Acting Director, Management Analysis and Services Office, Centers for Disease Control and Prevention.

[FR Doc. 02–19623 Filed 8–5–02; 8:45 am]

BILLING CODE 4163–70–P

DEPARTMENT OF HEALTH AND HUMAN SERVICES

Centers for Disease Control and Prevention

[Program Announcement 02163]

Support for Civil Society of Organizations Responding to HIV/AIDS in Zimbabwe; Notice of Availability of Funds; Amendment II

A notice announcing the availability of Fiscal Year 2002 funds for cooperative agreements for Support for Civil Society of Organizations Responding to HIV/AIDS in Zimbabwe was published in the **Federal Register** on May 23,2002, Volume 67, Number 100, Pages 36194–36196. The notice is amended as follows: On page 36194, column 3, section C, Availability of Funds, should be amended to include, ''Funding priorities for this program have been established by the CDC-Zimbabwe AIDS Program Office, to allow for geographic diversity of grantees as well as diversity in the functions and roles of grantees. These priorities include the following categories:

''(1) *Behavior Change Training:* One or two organizations to lead efforts involving training, workshops, and seminars on behavior change in young persons to prevent HIV/AIDS, incorporating the CDC MARCH strategy and/or other science-based strategies;

''(2) *Ecumenical MARCH Reinforcement Partner:* One multidenominational, faith-based organization that can serve as a lead institution for development of behavior change reinforcement materials and strategies to reach church-based youth groups.

''(3) *Denominations:* Two or three major denominations or faith organizations with commitment and capacity to implement a comprehensive HIV prevention plan for young persons in their denomination or organization.

''(4) *Organization of HIV-positive persons:* One or two organizations that symbolize, represent, and advocate for HIV-positive persons in Zimbabwe.

''(5) *Trainers in HIV/AIDS Medical Care:* One nongovernmental organization that provides training for health care professionals taking care of persons with HIV/AIDS.

''(6) *Multisectoral, district level organizations:* At least one to two (or possibly more) organizations that function principally at the district level, working across multiple sectors, with the capacity to assist in mobilizing multiple sectors for involvement with

the CDC MARCH reinforcement strategy at the district level.

''Applications responsive to this program announcement will be funded in the categories listed above. CDC expects to fund at least one, but no more than the maximum number identified. Additional organizations may be funded based on evaluation criteria and the availability of funds.''

Dated: July 31, 2002.

Sandra R. Manning,

Director, Procurement and Grants Office, Centers for Disease Control and Prevention.

[FR Doc. 02–19766 Filed 8–5–02; 8:45 am]

BILLING CODE 4163–18–P

DEPARTMENT OF HEALTH AND HUMAN SERVICES

Centers for Disease Control and Prevention

Disease, Disability, and Injury Prevention and Control Special Emphasis Panel: Workplace Violence Prevention Research, Announcement Number: OH–02–011

In accordance with section 10(a)(2) of the Federal Advisory Committee Act (Pub. L. 92–463), the Centers for Disease Control and Prevention (CDC) announces the following meeting:

Name: Disease, Disability, and Injury Prevention and Control Special Emphasis Panel (SEP): Workplace Violence Prevention Research, RFA OH–02–011.

Times and Dates:
8:30 a.m.–9 a.m., August 21, 2002 (Open),
9:10 a.m.–5:30 p.m., August 21, 2002 (Closed),
8:30 a.m.–5:30 p.m., August 22, 2002 (Closed).

Place: Harbor Court Hotel, 550 Light Street, Baltimore, MD 21202 phone (1–800–824–0076 or 410–347–9700).

Status: Portions of the meeting will be closed to the public in accordance with provisions set forth in section 552b(c) (4) and (6), Title 5 U.S.C., and the Determination of the Deputy Director for Program Management, CDC, pursuant to Public Law 92–463.

Matters to be Discussed: The meeting will include the review, discussion, and evaluation of applications received in response to RFA OH–02–011.

Contact Person for More Information: Gwendolyn Cattledge, Ph.D., Scientific Review Administrator, National Institute for Occupational Safety and Health, CDC, 1600 Clifton Road NE MS E–74, Atlanta, GA 30330, telephone (404) 498–2508.

The Director, Management Analysis and Services Office has been delegated the authority to sign **Federal Register** notices pertaining to announcements of meetings and other committee management activities, for both the Centers for Disease Control and Prevention and the Agency for Toxic Substances and Disease Registry.

Dated: August 1, 2002.

John Burkchardt,

Acting Director, Management Analysis and Services Office, Centers for Disease Control and Prevention (CDC).

[FR Doc. 02–19898 Filed 8–2–02; 10:57 am]

BILLING CODE 4163–19–P

DEPARTMENT OF HEALTH AND HUMAN SERVICES

Indian Health Service

Proposed Collection; Public Comment Request: Indian Health Service Medical Staff Credentials and Privileges Files

AGENCY: Indian Health Service.

ACTION: Request for Public Comment: 60-day Proposed Information Collection: Indian Health Service Medical Staff Credentials and Privileges Files.

SUMMARY: The Department of Health and Human Services, as part of its continuing effort to reduce paperwork and respondent burden, conducts a pre-clearance consultation program to provide the general public and Federal agencies with an opportunity to comment on proposed and/or continuing collections of information in accordance with the Paperwork Reduction Act of 1995 (PRA95) (44 U.S.C. 3506(c)(2)(A)). This program helps to ensure that requested data can be provided in the desired format, reporting burden (time and financial resources) is minimized, collection instruments are clearly understood, and the impact of collection requirements on respondents can be properly assessed. Currently, the Indian Health Service (IHS) is providing a 60-day advance opportunity for public comment on a proposed extension of current information collection activity to be submitted to the Office of Management and Budget for review.

Proposed Collection: Title: 09–17–0009, ''Indian Health Service Medical Staff Credentials and Privileges Files''. *Type of Information Collection Request:* Extension, without revision, of currently approved information collection, 09–17–0009, ''Indian Health Service Medical Staff Credentials and Privileges Files.'' *Form Number:* Instructions and information collection formats are contained in IHS Circular No. 93–2, ''Credentials and Privileges Review Process for the Medical Staff.'' *Need and Use of Information Collection:* The IHS operates health care facilities that provide health care services to American Indians and Alaska Natives. To provide these services, the IHS employs (directly and under contract) several categories of health care providers including: physicians (M.D. and D.O.), dentists, psychologists, optometrists, podiatrists, audiologists; and in some states, physician assistants, certified registered nurse anesthetists, nurse practitioners, and certified nurse midwives. IHS policy specifically requires physicians and dentists to be members of the health care facility medical staff where they practice. Health care providers become medical staff members, depending on the local health care facility's capabilities and medical staff bylaws. There are three types of IHS medical staff applicants: (1) Health care providers applying for direct employment with IHS; (2) contract health care providers who will not seek to become IHS employees; and (3) employed IHS health care providers who seek to transfer between IHS health care facilities. National health care standards developed by the Centers for Medicare and Medicaid Services, formerly the Health Care Financing Administration and by the Joint Commission on Accreditation of Healthcare Organizations (JCAHO) require health care facilities to review, evaluate and verify the credentials, training and experience of medical staff applicants prior to granting medical staff privileges. To meet these standards, IHS health care facilities require each medical staff applicant to provide information concerning their education, training, licensure, and work experience and any adverse disciplinary actions taken against them. This information is then verified with references supplied by the applicant and may include: former employers, educational institutions, licensure and certification boards, the American Medical Association, the Federation of State Medical Boards, the National Practitioner Data Bank, and the applicants themselves.

In addition to the initial granting of medical staff membership and clinical privileges, JCAHO standards require that a review of the medical staff be conducted not less than every two years. This review evaluates the current competence of the medical staff and verifies whether they are maintaining their licensure and the certification requirements of their specialty. The medical staff credentials and privileges records are maintained at the health care facility where the health care provider is a medical staff member. The establishment of these records at IHS health care facilities is not optional; such records must be established and

maintained at all health care facilities in the United States that are accredited by JCAHO. This information collection activity is used to evaluate individual health care providers applying for medical staff privileges at IHS health care facilities. *Affected Public:* individuals, businesses or other for-profit, not-for-profit institutions and Staff, local or Tribal Government. *Type of Respondents:* health care providers requesting medical staff privileges at IHS health facilities. The table below provides: types of data collection instruments, estimated number of respondents, number of responses per respondent, annual number of responses, average burden hour per response, and total annual burden hour.

Data collection instruction	Estimated No. of respondents	Responses per respondent	Annual No. of responses	Average burden hour per response*	Total annual burden hours
Application to Medical Staff	600	1	600	0.75 (45 mins)	450.0
Reference letter	1,800	1	1,800	0.33 (0 mins)	600.0
Reappointment request	644	1	644	1.00 (60 mins)	644.0
Medical Privileges	387	1	387	1.00 (60 mins)	387.0
Ob-Gyn Privileges	25	1	25	1.00 (60 mins)	25.0
Surgical Privileges	23	1	23	1.00 (60 mins)	23.0
Psychiatric Privileges	18	1	18	1.00 (60 mins)	18.0
Anesthesia Privileges	16	1	16	1.00 (60 mins)	16.0
Dental Privileges	128	1	128	0.33 (0 mins)	42.2
Optometric Privileges	21	1	21	0.33 (0 mins)	6.9
Psychology Privileges	23	1	23	0.17 (0 mins)	3.9
Audiologic Privileges	6	1	6	0.08 (0 mins)	0.5
Podiatric Privileges	6	1	6	0.08 (0 mins)	0.5
Radiology Privileges	9	1	9	0.33 (0 mins)	3.0
Pathology Privileges	3	1	3	0.33 (mins)	1.0
Total	3,709	.....	.....		2,221.0

*For ease of understanding, burden hours are also provided in actual minutes.

There are no Capital Costs, Operating Costs and/or Maintenance Costs to report.

Request for Comments: Your written comments and/or suggestions are invited on one or more of the following points: (a) Whether the information collection activity is necessary to carry out an agency function; (b) whether the agency processes the information collected in a useful and timely fashion; (c) the accuracy of public burden estimate (the estimated amount of time needed for individual respondents to provide the requested information); (d) whether the methodology and assumptions used to determine the estimate are logical; (e) ways to enhance the quality, utility, and clarity of the information being collected; and (f) ways to minimize the public burden through the use of automated, electronic, mechanical, or other technological collection techniques or other forms of information technology.

Send Comments and Requests For Further Information: Send your written comments and requests for more information on the proposed collection or requests to obtain a copy of the data collection instrument(s) and instructions to: Mr. Lance Hadahkwen, Sr., M.P.H., IHS Reports Clearance Officer, 12300 Twinbrook Parkway, Suite 450, Rockville, MD 20852–1601, call non-toll free (301) 443–5938; send via facsimile to (301) 443–2316, or send your e-mail requests, comments, and return address to: *lhodahkw@hqe.ihs.gov.*

Comment Due Date: Your comments regarding this information collection are best assured of having their full effect if received within 60 days of the date of this publication.

Dated: July 31, 2002.

Duane L. Jeanotte,

Acting Deputy Director, Indian Health Service.

[FR Doc. 02–19768 Filed 8–5–02; 8:45 am]

BILLING CODE 4160–16–M

DEPARTMENT OF THE INTERIOR

Office of the Secretary

Exxon Valdez Oil Spill Trustee Council; Invitation for Proposals

AGENCY: Office of the Secretary, Department of the Interior.

ACTION: Notice.

SUMMARY: The *Exxon Valdez* Oil Spill Trustee Council is asking the public, private organizations, and government agencies to submit proposals for implementation of the Gulf Ecosystem Monitoring and Research Program. The Invitation to Submit Restoration Proposals for Federal Fiscal Year 2003: Phase II is available on the Trustee Council Internet site.

DATES: Proposals are due September 4, 2002.

ADDRESSES: *Exxon Valdez* Oil Spill Trustee Council, 441 West 5th Avenue, Suite 500, Anchorage, Alaska 99501.

FOR FURTHER INFORMATION CONTACT: The Trustee Council Office, 907–278–8012 or toll free at 800–478–7745 (in Alaska) or 800–283–7745 (outside Alaska) or via Internet at *www.oilspill.state.ak.us.*

SUPPLEMENTARY INFORMATION: Following the *Exxon Valdez* oil spill in March 1989, a Trustee Council of three state and three federal trustees, including the Secretary of the Interior, was formed. The Trustee Council prepared a restoration plan for the injured resources and services within the oil spill area. The restoration plan called for annual work plans identifying projects to accomplish restoration. An extension of the Restoration Plan, the Gulf Ecosystem Monitoring and Research Program, also requires implementation through annual work plans. Each year proposals for restoration, monitoring, and research projects are solicited from a variety of organizations, including the public.

Dated: July 26, 2002.

Willie R. Taylor,

Director, Office of Environmental Policy and Compliance.

[FR Doc. 02–19791 Filed 8–5–02; 8:45 am]

BILLING CODE 4310–RG–P

DEPARTMENT OF THE INTERIOR

Bureau of Land Management

[AK–933–1430–ET; AA–82862, A–053428]

Public Land Order No. 7531; Withdrawal of Public Land at King Salmon; Partial Revocation of Air Navigation Site No. 169, as Amended; Alaska

AGENCY: Bureau of Land Management, Interior.

ACTION: Public Land Order.

SUMMARY: This order withdraws approximately 1.25 acres of public land from surface entry and mining but not from mineral leasing for a period of 20 years for the United States Air Force to protect the King Salmon Environmental Remediation Project. This action also revokes a Secretarial Order insofar as it affects the same 1.25 acres of public land withdrawn for use by the Federal Aviation Administration as part of Air Navigation Site No. 169.

EFFECTIVE DATE: August 6, 2002.

FOR FURTHER INFORMATION CONTACT: Robbie J. Havens, Bureau of Land Management, Alaska State Office, 222 W. 7th Avenue, No. 13, Anchorage, Alaska 99513–7599, 907–271–5477.

SUPPLEMENTARY INFORMATION: By virtue of the authority vested in the Secretary of the Interior by Section 204 of the Federal Land Policy and Management Act of 1976, 43 U.S.C. 1714 (1994), it is ordered as follows:

1. Subject to valid existing rights, the following described public land is hereby withdrawn from settlement, sale, location, or entry under the public land laws, including the United States mining laws, 30 U.S.C. ch 2 (2000), but not from leasing under the mineral leasing laws, for the United States Air Force to protect the King Salmon Remediation Project (AA–82862):

Seward Meridian

T. 17 S., R. 45 W.,
Sec. 15, N½NE¼SW¼SW¼SE¼.
The area described contains approximately 1.25 acres.

2. The Secretarial Order dated October 15, 1941, as amended, which withdrew public land for Air Navigation Site No. 169 (A–053428), is hereby revoked insofar as it affects the land described in Paragraph 1 containing approximately 1.25 acres.

3. The withdrawal made by this order does not alter the applicability of those public land laws governing the use of the lands under lease, license, or permit, or governing the disposal of its mineral or vegetative resources other than under the mining laws.

4. This withdrawal will expire 20 years from the effective date of this order unless, as a review conducted before the expiration date pursuant to Section 204(f) of the Federal Land Policy and Management Act of 1976, 43 U.S.C. 1714(f) (1994), the Secretary determines that the withdrawal shall be extended.

Dated: July 18, 2002.

Rebecca W. Watson,

Assistant Secretary—Land and Minerals Management.

[FR Doc. 02–19784 Filed 8–5–02; 8:45 am]

BILLING CODE 4310–JA–P

DEPARTMENT OF THE INTERIOR

Bureau of Land Management

[MTM 42163]

Public Land Order No. 7532; Revocation of Secretarial Order Dated May 2, 1908; Montana

AGENCY: Bureau of Land Management, Interior.

ACTION: Public Land Order.

SUMMARY: This order revokes a Secretarial Order in its entirety as to 50.00 acres of National Forest System land withdrawn for a Forest Service administrative site. The land is no longer needed for this purpose and the revocation is needed to facilitate a U.S. Army, Corps of Engineers' wetlands mitigation project. This action will open the land to such forms of disposition as may by law be made of National Forest System lands and to mining. The land has been and will remain open to mineral leasing.

EFFECTIVE DATE: September 5, 2002.

FOR FURTHER INFORMATION CONTACT: Ron Erickson, U.S. Forest Service, Region 1, P.O. Box 7669, Missoula, Montana 59807, (406) 329–3623.

SUPPLEMENTARY INFORMATION: By virtue of the authority vested in the Secretary of the Interior by Section 204 of the Federal Land Policy and Management Act of 1976, 43 U.S.C. 1714 (1994), it is ordered as follows:

1. The Secretarial Order dated May 2, 1908, which withdrew National Forest System land for the Swamp Creek Administrative Site, is hereby revoked in its entirety as to the following described National Forest System land:

Principal Meridian, Montana

Kootenai National Forest

T. 27 N., R. 30 W.,
Sec. 11, NE¼SE¼;
Sec. 12, W½W½NW¼SW¼.

The area described contains 50.00 acres in Lincoln County.

2. At 9 a.m. on September 5, 2002, the land will be opened to such forms of disposition as may by law be made of National Forest System lands, including location and entry under the United States mining laws, subject to valid existing rights, the provisions of existing withdrawals, other segregations of record, and the requirements of applicable law. Appropriation of any land described in this order under the general mining laws prior to the date and time of restoration is unauthorized. Any such attempted appropriation, including attempted adverse possession under 30 U.S.C. 38 (1994), shall vest no rights against the United States. Acts required to establish a location and to initiate a right of possession are governed by State law where not in conflict with Federal law. The Bureau of Land Management will not intervene in disputes between rival locators over possessory rights since Congress has provided for such determinations in local courts.

Dated: July 18, 2002.

Rebecca W. Watson,

Assistant Secretary—Lands and Minerals Management.

[FR Doc. 02–19785 Filed 8–5–02; 8:45 am]

BILLING CODE 3410–11–P

DEPARTMENT OF THE INTERIOR

Bureau of Land Management

[OR–958–1430–ET; GPO–02–0138; WAOR–55695]

Public Land Order No. 7533; Withdrawal of National Forest System Lands for the Holden Mine Reclamation Project; Washington

AGENCY: Bureau of Land Management, Interior.

ACTION: Public land order.

SUMMARY: This order withdraws 1,265 acres of National Forest System lands from location and entry under the United States mining laws for a period of 20 years to protect the Holden Mine Reclamation Project. The lands have been and will remain open to such forms of disposition as may by law be made of National Forest System lands and to mineral leasing.

EFFECTIVE DATE: August 6, 2002.

FOR FURTHER INFORMATION CONTACT: Norman Day, Holden Mine Rehabilitation Project Manager, Wenatchee National Forest, 509–662–4304, or Charles R. Roy, BLM Oregon/Washington State Office, 503–952–6189.

SUPPLEMENTARY INFORMATION: By virtue of the authority vested in the Secretary of the Interior by Section 204 of the Federal Land Policy and Management Act of 1976, 43 U.S.C. 1714 (1994), it is ordered as follows:

1. Subject to valid existing rights, the following described National Forest System lands are hereby withdrawn from location and entry under the United States mining laws (30 U.S.C. Ch. 2 (1994)), to protect the Holden Mine Reclamation Project:

Willamette Meridian

T. 31 N., R. 16 E.,
Protraction Block 37.
T. 31 N., R. 17 E.,
Sec. 8, S½ and S½N½; Protraction Block 37.
The areas described aggregate 1,265 acres in Chelan County.

2. The withdrawal made by this order does not alter the applicability of those public land laws governing the use of the lands under lease, license, or permit, or governing the disposal of their mineral or vegetative resources other than under the mining laws.

3. This withdrawal will expire 20 years from the effective date of this order unless, as a result of a review conducted before the expiration date pursuant to Section 204(f) of the Federal Land Policy and Management Act of 1976, 43 U.S.C. 1714(f)(1994), the Secretary determines that the withdrawal shall be extended.

Dated: July 18, 2002.

Rebecca W. Watson,

Assistant Secretary—Land and Minerals Management.

[FR Doc. 02–19786 Filed 8–5–02; 8:45 am]

BILLING CODE 4310–33–P

DEPARTMENT OF THE INTERIOR

Minerals Management Service

Agency Information Collection Activities: Proposed Collection; Comment Request

AGENCY: Minerals Management Service (MMS), Interior.

ACTION: Notice of extension of an information collection (1010–0072).

SUMMARY: To comply with the Paperwork Reduction Act of 1995 (PRA), we are inviting comments on a collection of information that we will submit to the Office of Management and Budget (OMB) for review and approval. The information collection request (ICR) concerns the paperwork requirements in the regulations under 30 CFR 280, ''Prospecting for Minerals other than Oil, Gas, and Sulphur in the Outer Continental Shelf.''

DATES: Submit written comments by October 7, 2002.

ADDRESSES: Mail or hand-carry comments to the Department of the Interior; Minerals Management Service; Attention: Rules Processing Team; Mail Stop 4024; 381 Elden Street; Herndon, Virginia 20170–4817. If you wish to e-mail comments to MMS, the address is: *rules.comments@MMS.gov.* Reference ''Information Collection—1010–0072'' in your subject line. Include your name and return address in your message and mark it for return receipt.

FOR FURTHER INFORMATION CONTACT: Alexis London, Rules Processing Team, telephone (703) 787–1600. You may also contact Alexis London to obtain a copy at no cost of the regulations that require the subject collection of information.

SUPPLEMENTARY INFORMATION:

Title: 30 CFR 280, Prospecting for Minerals other than Oil, Gas, and Sulphur in the Outer Continental Shelf.

OMB Control Number: 1010–0072.

Abstract: The Outer Continental Shelf (OCS) Lands Act, as amended (43 U.S.C. 1331 *et seq.* and 43 U.S.C. 1801 *et seq.*), authorizes the Secretary of the Interior (Secretary) to prescribe rules and regulations to administer leasing of the OCS. Section 1340 states that ''* * * any person authorized by the Secretary may conduct geological and geophysical explorations in the [O]uter Continental Shelf, which do not interfere with or endanger actual operations under any lease maintained or granted pursuant to this Act, and which are not unduly harmful to aquatic life in such area.'' The section further requires that, permits to conduct such activities may only be issued if it is determined that: the applicant is qualified; the activities are not polluting, hazardous, or unsafe; they do not interfere with other users of the area; and do not disturb a site, structure, or object of historical or archaeological significance.

Section 1352 further requires that certain costs be reimbursed to the parties submitting required G&G information and data. Under the Act, permittees are to be reimbursed for the costs of reproducing any G&G data required to be submitted. Permittees are to be reimbursed also for the reasonable cost of processing geophysical information required to be submitted when processing is in a form or manner required by the Director and is not used in the normal conduct of the business of the permittee.

Regulations implementing these responsibilities are under 30 CFR part 280. On December 8, 1999, MMS published a Notice of Proposed Rulemaking (64 FR 68649) that proposed amendments to, and revised into plain language, the 30 CFR 280 regulations, as well as other amendments. The OMB approved the information collection burden for the proposed rulemaking. On July 17, 2002, MMS published final regulations (67 FR 46855) with an effective date of August 16, 2002. There were no changes from proposed to final that impacted the information collection burden that OMB had approved as part of the proposed rulemaking process. The current OMB approval expires in January 2003. The revised 30 CFR 280 final regulations, as published, are the subject of this notice and the subsequent submission to OMB for approval of the information collection burden.

Responses are mandatory or required to obtain or retain a benefit. No questions of a ''sensitive'' nature are asked. The MMS protects information considered proprietary according to 30 CFR 280.70 and applicable sections of 30 CFR parts 250 and 252, and the Freedom of Information Act (5 U.S.C. 552) and its implementing regulations (43 CFR 2).

MMS OCS Regions collect information required under part 280 to ensure there is no environmental degradation, personal harm or unsafe operations and conditions, damage to historical or archaeological sites, or interference with other uses; to analyze and evaluate preliminary or planned drilling activities; to monitor progress and activities in the OCS; to acquire G&G data and information collected under a Federal permit offshore; and to determine eligibility for reimbursement from the Government for certain costs. Respondents are required to submit form MMS–134 to provide the information necessary to evaluate their qualifications. The information is necessary for MMS to determine if the applicants for permits or filers of notices meet the qualifications specified by the Act. The MMS uses the information collected to understand the G&G characteristics of hard mineral-bearing physiographic regions of the OCS. It aids MMS in obtaining a proper balance among the potentials for environmental damage, the discovery of hard minerals, and adverse impacts on affected coastal states. Information from permittees is necessary to determine the propriety and amount of reimbursement.

Frequency: On occasion, annual; and as required in the permit.

Estimated Number and Description of Respondents: Approximately 1 permittee, 1 notice filer, and 1 adjacent State.

Estimated Reporting and Recordkeeping ''Hour'' Burden: The currently approved annual ''hour'' burden for this information collection is 88 hours. The following chart details the individual components and respective hour burden estimates of this ICR. In calculating the burdens, we assumed that respondents perform certain requirements in the normal course of their activities. We consider these to be usual and customary and took that into account in estimating the burden.

Citation 30 CFR 280	Reporting and recordkeeping requirement	Hour burden
10; 11(a); 12; 13; Permit Forms.	Apply for a permit (form MMS–134) to conduct prospecting or G&G scientific research activities, including prospecting/scientific research plan and environmental assessment or drilling plan as required.	8
11(b); 12(c)	File notice to conduct scientific research activities related to hard minerals, including notice to MMS prior to beginning and after concluding activities.	8
21(a)	Report to MMS if hydrocarbon/other mineral occurrences or environmental hazards are detected or adverse effects occur.	1
22	Request approval to modify operations	1
23(b)	Request reimbursement for expenses for MMS inspection	1
24	Submit status and final reports quarterly or on specified schedule and final report	8
28	Request relinquishment of permit	1
31(b); 73(a) and (b)	Governor(s) of adjacent state(s) submissions to MMS: comments on activities involving an environmental assessment; request for proprietary data, information, and samples; and disclosure agreement.	1
33, 34	Appeal penalty, order, or decision—burden covered under 1010–0121	.....
40; 41; 50; 51; Permit Forms.	Notify MMS and submit G&G data/information collected under a permit and/or processed by permittees or 3rd parties, including.	4
42(b); 52(b)	Advise 3rd party recipient of obligations. Part of licensing agreement between parties; no submission to MMS.	.....
42(c), 42(d); 52(c), 52(d)	Notify MMS of 3rd party transactions	1
60; 61(a)	Request reimbursement for costs of reproducing data/information & certain processing costs	20
72(b)	Submit in not less than 5 days comments on MMS intent to disclose data/information	1
72(d)	Contractor submits written commitment not to sell, trade, license, or disclose data/information	1
1–80	General departure and alternative compliance requests not specifically covered elsewhere in part 280 regulations.	2
Permit Forms	Request extension of permit time period	1
Permit Forms	Retain G&G data/information for 10 years and make available to MMS upon request	1

Estimated Reporting and Recordkeeping ''Non-Hour Cost'' Burden: We have identified no non-hour cost burdens for this collection of information.

Public Disclosure Statement: The PRA (44 U.S.C. 3501, *et seq.*) provides that an agency may not conduct or sponsor a collection of information unless it displays a currently valid OMB control number. Until OMB approves a collection of information, you are not obligated to respond.

Comments: Before submitting an ICR to OMB, PRA section 3506(c)(2)(A) requires each agency ''* * * to provide notice * * * and otherwise consult with members of the public and affected agencies concerning each proposed collection of information * * *''. Agencies must specifically solicit comments to: (a) Evaluate whether the proposed collection of information is necessary for the agency to perform its duties, including whether the information is useful; (b) evaluate the accuracy of the agency's estimate of the burden of the proposed collection of information; (c) enhance the quality, usefulness, and clarity of the information to be collected; and (d) minimize the burden on the respondents, including the use of automated collection techniques or other forms of information technology.

Agencies must also estimate the ''non-hour cost'' burdens to respondents or recordkeepers resulting from the collection of information. Therefore, if you have costs to generate, maintain, and disclose this information, you should comment and provide your total capital and startup cost components or annual operation, maintenance, and purchase of service components. You should describe the methods you use to estimate major cost factors, including system and technology acquisition, expected useful life of capital equipment, discount rate(s), and the period over which you incur costs. Capital and startup costs include, among other items, computers and software you purchase to prepare for collecting information, monitoring, and record storage facilities. You should not include estimates for equipment or services purchased: (i) before October 1, 1995; (ii) to comply with requirements not associated with the information collection; (iii) for reasons other than to provide information or keep records for the Government; or (iv) as part of customary and usual business or private practices.

We will summarize written responses to this notice and address them in our submission for OMB approval. As a result of your comments, we will make any necessary adjustments to the burden in our submission to OMB.

Public Comment Policy: Our practice is to make comments, including names and home addresses of respondents, available for public review during regular business hours. Individual respondents may request that we withhold their home address from the record, which we will honor to the extent allowable by the law. There may be circumstances in which we would withhold from the record a respondent's identity, as allowable by the law. If you wish us to withhold your name and/or address, you must state this prominently at the beginning of your comment. However, we will not consider anonymous comments. We will make all submissions from organizations or businesses, and from individuals identifying themselves as representatives or officials of organizations or businesses, available for public inspection in their entirety.

MMS Information Collection Clearance Officer: Jo Ann Lauterbach, (202) 208–7744.

Dated: July 26, 2002.

John V. Mirabella,

Acting Chief, Engineering and Operations Division.

[FR Doc. 02–19813 Filed 8–5–02; 8:45 am]

BILLING CODE 4310–MR–P

DEPARTMENT OF THE INTERIOR

National Park Service

National Register of Historic Places; Notification of Pending Nominations

Nominations for the following properties being considered for listing in the National Register were received by the National Park Service before July 13, 2002.

Pursuant to section 60.13 of 36 CFR part 60 written comments concerning the significance of these properties under the National Register criteria for evaluation may be forwarded by United States Postal Service, to the National Register Historic Places, National Park Service, 1849 C St. NW., NC400, Washington, DC 20240; by all other carriers, National Register of Historic Places, National Park Service, 800 N. Capitol St., NW., Suite 400, Washington DC 20002; or by fax, 202–343–1836. Written or faxed comments should be submitted by August 21, 2002.

Dated: August 21, 2002

Patrick W. Andrus,

Acting Keeper of the National Register of Historic Places.

Connecticut

Fairfield County

Baldwin, Caleb, Tavern (Rochambeau's Army in Connecticut, 1780–1782 MPS), 32 Main St., Newtown, 02000869

Basset, Daniel, House (Rochambeau's Army in Connecticut, 1780–1782 MPS), 1024 Monroe Turnpike, Monroe, 02000870

Litchfield County

Sherman, David, House (Rochambeau's Army in Connecticut, 1780–1782 MPS), 63 Middle Quarter Rd., Woodbury, 02000868

New Haven County

Strauss, Adler Company Corset Factory, 78–84 Olive St., New Haven, 02000864

New London County

Avery Point Lighthouse, On Long Island Sound at 1084 Shennecossett Rd., Groton, 02000866

Gales Ferry Historic District No. 2 (Ledyard MPS), Roughly along Hurlbutt Rd., from Allyn Rd. to Military Hwy., Ledyard, 02000865

Taintor, Charles M., House (Rochambeau's Army in Connecticut, 1780–1782 MPS), 12 Buckley Hill Rd., Colchester, 02000871

Windham County

Dorrance Inn (Rochambeau's Army in Connecticut, 1780–1782 MPS), 748 Plainfield Pike, Sterling, 02000867

Georgia

Fulton County

Southern Dairies, 593 Glen Iris Dr., Atlanta, 02000872

Hall County

Gainesville Commercial Historic District, Roughly bounded by Broad St., Maple St., Academy St. and Green St., Gainesville, 02000873

Missouri

Jackson County

BMA Tower, 700 Karnes Blvd., Kanssas City, 02000886

Nevada

Washoe County

Barnard, W.E., 950 Joaquin Miller Dr., Reno, 02000874

Greystone Castle, 970 Joaquin Miller Dr., Reno, 02000875

New York

Greene County

Rowena Memorial School, NY 23A, Palenville, 02000879

Orange County

Hays, John R., House, 45 Maple St., Walden, 02000880

Mould, Moses, House, 1743 NY 17K, Montgomery, 02000876

Saratoga County

Marshall House, 136 NY 32N, Schuylerville, 02000878

Steuben County

Younglove, Timothy M., Octagon House, 8329 Pleasant Valley Rd., Urbana, 02000877

Ohio

Cuyahoga County

Ambler Heights Historic District, Roughly bounded by Martin Luther King, Jr. Blvd., Cedar Glen, N. Park, Blvd., and along Harcourt Dr., Cleveland Heights, 02000883

Euclid City Hall, 585 E. 222nd St., Euclid, 02000884

Euclid Golf Allotment, Roughly bounded by Cedar Rd., Coventry Rd., Scarborough Rd., W. St. James Pkwy, and Ardleigh Dr., Cleveland Heights, 02000887

Harrison County

Law, Henry, Farm Historic District, 87675 Reed Rd., Uhrichsville, 02000882

Miami County

Pleasant Hill United Church of Christ, 10 W. Monument St., Pleasant Hill, 02000881

Montgomery County

Bixler, George, Farm, 13213 Providence Pike, Brookville, 02000888

Pennsylvania

Adams County

Cline's Church of the United Brethren in Christ, Cline's Church Rd., 0.5 mi. S of PA 34, Menallen, 02000894

Berks County

Berkley Historic District, Section of Snyder Rd. bet PA 61 and Berkley Rd., Ontelaunee, 02000892

Franklin County

Handycraft Farmstead, 11071 Country Club Rd., Washington, 02000893

Luzerne County

St. Gabriel's Catholic Parish Complex, 122–142 S. Wyoming St., Hazleton, 02000889

Philadelphia County

Warburton House, 1929 Sansom St., Philadelphia, 02000890

Washington County

Stephenson—Campbell House, At the endof Tomahawk Claim Lne. off of Reissing Rd., Cecil, 02000891

Texas

Refugio County

Refugio County Courthouse, 808 Commerce, Refugio, 02000895

Smith County

People's National Bank Building (Tyler, Texas MPS), 102 N. College Ave., Tyler, 02000896

Short-Line Residential Historic District, (Tyler, Texas MPS), Roughly bounded by West Ln., N. Ellis, Short St., and an unnamed alley to the east, Tyler, 02000897

West Virginia

Harrison County

Bassel, Daniel, House, WV 25, S of Jct. of WV 270 and WV 25, Lost Creek, 02000898

Kanawha County

Maple Terrace Court and Walton Apartments, Maple Terrace Court, Charleston, 02000885

Mineral County

Carskadon, Thomas R., House, Carskadon Rd., Keyser, 02000900

Mingo County

Smith, Elven C., House, 210 Little Oak St., Williamson, 02000899

A request for REMOVAL has been made for the following resource:

Puerto Rico

Aguadilla County

Silva-Benejan House 15 Munoz Rivera St., Aguadilla, 87000725

[FR Doc. 02–19765 Filed 8–5–02; 8:45 am]

BILLING CODE 4310–70–P

INTERNATIONAL TRADE COMMISSION

[Investigation Nos. 701–TA–376, 377, and 379 (Final) and Investigations Nos. 731–TA–788–793 (Final) (Remand)]

Certain Stainless Steel Plate from Belgium, Canada, Italy, Korea, South Africa, and Taiwan; Amended Notice and Scheduling of Remand Proceedings

AGENCY: International Trade Commission.

ACTION: Correction notice for the subject investigation.

SUMMARY: On July 29, 2002, the Commission published in the **Federal Register** (67 FR 145) an amended notice of investigation on Certain Stainless Steel Plate from Belgium, Canada, Italy, Korea, South Africa, and Taiwan, Nos. 701–TA–376, 377 and 379 (Final) and 731–TA–788–793 (Final). The document was published incorrectly and this notice replaces the previous published document. The U.S. International Trade Commission (the Commission) hereby gives notice of its amended schedule in the court-ordered remand of its final antidumping and countervailing duty investigations, Certain Stainless Steel Plate from Belgium, Canada, Italy, Korea, South Africa, and Taiwan, Nos. 701–TA–376, 377 and 379 (Final) and 731–TA–788–793 (Final).

EFFECTIVE DATE: July 23, 2002.

FOR FURTHER INFORMATION CONTACT: Woodley Timberlake, Office of Investigations, telephone 202–205–3188 or Neal J. Reynolds, Office of General Counsel, telephone 202–205–3093, U.S. International Trade Commission. Hearing-impaired individuals are advised that information on this matter can be obtained by contacting the Commission's TDD terminal on 202–205–1810. General information concerning the Commission may also be obtained by accessing its Internet server (*http://www.usitc.gov*).

SUPPLEMENTARY INFORMATION:

Background

In May 1998, the Commission determined, by a four-to-two vote, that an industry in the United States was not being materially injured or threatened with material injury by reason of imports of cold-rolled stainless steel plate in coils from Belgium and Canada. On August 28, 2000, the Court of International Trade affirmed this determination as being in accordance with law and supported by substantial evidence. *Allegheny Ludlum Corp.* v. *United States,* 116 F.Supp. 2d 1276 (CIT 2000). On April 19, 2002, the U.S. Court of Appeals for the Federal Circuit vacated the lower court ruling, finding that the Commission's volume and impact findings with respect to cold-rolled stainless steel plate were not in accordance with law and that its pricing finding for cold-rolled plate was unsupported by substantial evidence. *Allegheny Ludlum Corp.* v. *United States,* Appeal No. 01–1223 (April 19, 2002). On June 18, 2002, in accordance with the Federal Circuit's decision, the Court of International Trade vacated its earlier decision and remanded to the Commission its final negative determination with respect to cold-rolled stainless steel plate. In its order, the Court of International Trade remanded the determination to the Commission ''for proceedings not inconsistent with the Federal Circuit's decision in Appeal No. 01–1223.'' It also directed the Commission to issue a remand determination within sixty days of the date of the order, i.e., by August 19, 2002. On July 8, 2002, the Commission published its schedule for the remand proceeding in the **Federal Register**. 67 FR 47147.

On July 10, 2002, the Commission filed a motion with the Court of International Trade requesting an extension of the deadline for filing the remand determination until September 27, 2002. On July 15, 2002, the Court granted the Commission's request. Accordingly, the Commission is amending the schedule of its remand proceeding to reflect the Court's order. Any deadlines not specified below remain unchanged from the Commission's original notice.

Scheduling the Vote

The Commission will vote on the remand determination at a public meeting to be held on Thursday, September 12, 2002. The meeting is tentatively scheduled for 2:00 p.m.

Written Submissions

Each party who is an interested party in this remand proceeding may submit a written brief to the Commission. The brief must be concise and be limited to comments on how the data obtained in this remand proceeding affect the Commission's original determination with respect to cold-rolled stainless steel plate products. Any material in the comments not addressing this limited issue will be stricken from the record. The brief must be double-spaced, single-sided, and on stationary measuring 8½ by 11 inches. The brief will be limited to thirty (30) pages, and must be filed no later than the close of business on August 23, 2002.

Each party who is an interested party may also a submit a rebuttal brief to the Commission. The brief must be concise and limited to rebutting or commenting on the arguments made or facts presented by other parties in their initial brief. Any material in the comments not addressing these issues will be stricken from the record. The brief must be double-spaced, single-sided, and on stationary measuring 8½ by 11 inches. The rebuttal brief will be limited to ten (10) pages, and must be filed no later than the close of business on August 30, 2002.

All written submissions must conform with the provisions of section 201.8 of the Commission's rules; any submissions that contain business proprietary information (BPI) must also conform with the requirements of sections 201.6, 207.3, and 207.7 of the Commission's rules. In accordance with sections 3201.16(c) and 207.3 of the rules, each document filed by a party to the investigation must be served on all other parties to the investigation (as identified by either the public or BPI service list), and a certificate of service must be timely filed. The Secretary will not accept a document for filing without a certificate of service.

Authority: This action is taken under the authority of the Tariff Act of 1930, title VII.

By order of the Commission.

Issued: August 2, 2002.

Marilyn R. Abbott,

Secretary to the Commission.

[FR Doc. 02–19973 Filed 8–5–02; 8:45 am]

BILLING CODE 7020–02–P

DEPARTMENT OF JUSTICE

Antitrust Division

Notice Pursuant to the National Cooperative Research and Production Act of 1993—Financial Services Technology Consortium, Inc.

Notice is hereby given that, on June 28, 2002, pursuant to section 6(a) of the National Cooperative Research and Production Act of 1993, 15 U.S.C. 4301 *et seq.* (''the Act''), Financial Services Technology Consortium, Inc. has filed written notifications simultaneously with the Attorney General and the Federal Trade Commission disclosing changes in its membership status. The notifications were filed for the purpose of extending the Act's provisions limiting the recovery of antitrust plaintiffs to actual damages under specified circumstances. Specifically, National City Corporation, Cleveland, OH; Comerica Bank, Detroit, MI; and Canadian Payments Association, Ottawa, Ontario, Canada have been added as parties to this venture. Also, ESI International, Woodland Hills, CA; CUNA & Affiliates, Washington, DC; Data Treasury Corp., Melville, NY; ValiCert, Mountain View, CA; Experian, Orange, CA; and CashEdge, New York, NY have been dropped as parties to this venture.

No other changes have been made in either the membership or planned activity of the group research project.

Membership in this group research project remains open, and Financial Services Technology Consortium, Inc. intends to file additional written notification disclosing all changes in membership.

On October 21, 1993, Financial Services Technology Consortium, Inc. filed its original notification pursuant to section 6(a) of the Act. The Department of Justice published a notice in the **Federal Register** pursuant to section 6(b) of the Act on December 14, 1993 (58 FR 65399).

The last notification was filed with the Department on March 29, 2002. A notice was published in the **Federal Register** pursuant to Section 6(b) of the Act of April 30, 2002 (67 FR 21271).

Constance K. Robinson,

Director of Operations, Antitrust Division.

[FR Doc. 02–19749 Filed 8–5–02; 8:45 am]

BILLING CODE 4410–11–M

DEPARTMENT OF JUSTICE

Antitrust Division

Notice Pursuant to the National Cooperative Research and Production Act of 1993—Southwest Research Institute: Effect of Emission Control Technologies on the Chemical and Physical Characteristics of Particulate Matter

Notice is hereby given that, on June 25, 2002, pursuant to section 6(a) of the National Cooperative Research and Production Act of 1993, 15 U.S.C. 4301 *et seq.* (''the Act''), Southwest Research Institute: Effect of Emission Control Technologies on the Chemical and Physical Characteristics of Particulate Matter has filed written notifications simultaneously with the Attorney General and the federal Trade Commission disclosing (1) the identities of the parties and (2) the nature and objectives of the venture. The notifications were filed for the purpose of invoking the Act's provisions limiting the recovery of antitrust plaintiffs to actual damages under specified circumstances. Pursuant to Section 6(b) of the Act, the identities of the parties are Caterpillar, Inc., Peoria, IL; INTEVEP, Cartacas, Venezuela; and Lubrizol Corporation, Wickliff, OH. The nature and objectives of the venture are to research the impact of various modern and novel NO_X and PM control technologies on the chemical and physical characteristics of particles emitted from diesels. For NO_X reduction, NO_X adsorber technology and its control will be developed. For particulate matter control, diesel oxidation catalysts in combination with diesel particulate filters will be included.

Membership in this research group remains open, and the participants intend to file additional written notification disclosing all changes in membership or planned activities.

Constance K. Robinson,

Director of Operations, Antitrust Division.

[FR Doc. 02–19750 Filed 8–5–02; 8:45 am]

BILLING CODE 4410–11–M

DEPARTMENT OF JUSTICE

Drug Enforcement Administration

Manufacturer of Controlled Substances; Notice of Application

Pursuant to Section 1301.33(a) of Title 21 of the Code of Federal Regulations (CFR), this is notice that on February 22, 2002, Penick Corporation, 158 Mount Olivet Avenue, Newark, New Jersey 07114, made application by renewal to the Drug Enforcement Administration (DEA) for registration as a bulk manufacturer of the basic classes of controlled substances listed below:

Drug	Schedule
Codeine (9050)	II
Dihydrocodeine (9120)	II
Oxycodone (9143)	II
Hydromorphone (9150)	II
Hydrocodone (9193)	II
Morphine (9300)	II
Thebaine (9333)	II
Oxymorphone (9652)	II

The firm plans to manufacture the listed controlled substances for distribution as bulk pharmaceutical products to its customers.

Any other such applicant and any person who is presently registered with DEA to manufacture such substances may file comments or objections to the issuance of the proposed registration.

Any such comments or objections may be addressed, in quintuplicate, to the Deputy Assistant Administrator, Office of Diversion Control, Drug Enforcement Administration, United States Department of Justice, Washington, DC 20537, Attention: DEA Federal Register Representative (CCR), and must be filed no later than October 7, 2002.

Dated: July 9, 2002.

Laura M. Nagel,

Deputy Assistant Administrator, Office of Diversion Control, Drug Enforcement Administration.

[FR Doc. 02–19830 Filed 8–5–02; 8:45 am]

BILLING CODE 4410–09–M

DEPARTMENT OF JUSTICE

Drug Enforcement Administration

Importer of Controlled Substances; Notice of Registration

By Notice dated March 7, 2002, and published in the **Federal Register** on March 18, 2002, (67 FR 12050), Roxane Laboratories, Inc., 1809 Wilson Road, P.O. Box 16532, Columbus, Ohio 43216–6532, made application by renewal to the Drug Enforcement Administration to be registered as an importer of cocaine (9041), a basic class of controlled substance listed in Schedule II.

The firm plans to import cocaine to manufacture topical solutions for distribution to customers.

No comments or objections have been received. DEA has considered the factors in Title 21, United States Code, section 823(a) and determined that the registration of Roxane Laboratories, Inc. to import cocaine is consistent with the public interest and with United States obligations under international treaties, conventions, or protocols in effect on May 1, 1971, at this time. DEA has investigated Roxane Laboratories, Inc. on a regular basis to ensure that the company's continued registration is consistent with the public interest. These investigations have included inspection and testing of the company's physical security systems, audits of the company's records, verification of the company's compliance with state and local laws, and a review of the company's background and history. Therefore, pursuant to section 1008(a) of the Controlled Substances Import and Export Act and in accordance with Title 21, Code of Federal Regulations, Section 1301.34, the above firm is granted registration as an importer of the basic class of controlled substance listed above.

Dated: June 28, 2002.

Laura M. Nagel,

Deputy Assistant Administrator, Office of Diversion Control, Drug Enforcement Administration.

[FR Doc. 02–19832 Filed 8–5–02; 8:45 am]

BILLING CODE 4410–09–M

DEPARTMENT OF JUSTICE

Drug Enforcement Administration

Importation of Controlled Substances; Notice of Application

Pursuant to section 1008 of the Controlled Substances Import and Export Act (21 U.S.C. 958(I)), the Attorney General shall, prior to issuing

a registration under this section to a bulk manufacturer of a controlled substance in Schedule I or II and prior to issuing a regulation under Section 1002(a) authorizing the importation of such a substance, provide manufacturers holding registrations for the bulk manufacture of the substance an opportunity for a hearing.

Therefore, in accordance with section 1301.34 of Title 21, Code of Federal Regulations (CFR), notice is hereby given that on February 19, 2002, Stepan Company, Natural Products Department, 100 W. Hunter Avenue, Maywood, New Jersey 07607, made application by renewal to the Drug Enforcement Administration to be registered as an importer of coca leaves (9040), a basic class of controlled substance listed in Schedule II.

The firm plans to import the coca leaves to manufacture bulk controlled substances.

Any manufacturer holding, or applying for, registration as a bulk manufacturer of this basic class of controlled substance may file written comments on or objections to the application described above and may, at the same time, file a written request for a hearing on such application in accordance with 21 CFR 1301.43 in such form as prescribed by 21 CFR 1316.47.

Any such comments, objections or requests for a hearing may be addressed, in quintuplicate, to the Deputy Assistant Administrator, Office of Diversion Control, Drug Enforcement Administration, United States Department of Justice, Washington, DC 20537, Attention: DEA Federal Register Representative (CCR), and must be filed no later than September 5, 2002.

This procedure is to be conducted simultaneously with and independent of the procedures described in 21 CFR 1301.34(b), (c), (d), (e), and (f). As noted in a previous notice at 40 FR 43745–46 (September 23, 1975), all applicants for registration to import a basic class of any controlled substance in Schedule I or II are and will continue to be required to demonstrate to the Deputy Assistant Administrator, Office of Diversion Control, Drug Enforcement Administration that the requirements for such registration pursuant to 21 U.S.C. 958(a), 21 U.S.C. 823(a), and 21 CFR 1301.34(a), (b), (c), (d), (e), and (f) are satisfied.

Dated: July 12, 2002.

Laura M. Nagel,

Deputy Assistant Administrator, Office of Diversion Control, Drug Enforcement Administration.

[FR Doc. 02–19831 Filed 8–5–02; 8:45 am]

BILLING CODE 4410–09–M

DEPARTMENT OF JUSTICE

Immigration and Naturalization Service

Agency Information Collection Activities: Proposed Collection; Comment Request

ACTION: 30-Day notice of information collection under review: Application for waiver of grounds of excludability; Form I–690.

The Department of Justice, Immigration and Naturalization Service (INS) has submitted the following information collection request to the Office of Management and Budget (OMB) for review and clearance in accordance with the Paperwork Reduction Act of 1995. The information collection was previously published in the **Federal Register** on August 8, 2001 at 66 FR 41608, allowing for a 60-day public comment period. No public comment was received on this information collection.

The purpose of this notice is to allow an additional 30 days for public comments. Comments are encouraged and will be accepted until September 5, 2002. This process is conducted in accordance with 5 CFR 1320.10.

Written comments and/or suggestions regarding the items contained in this notice, especially regarding the estimated public burden and associated response time, should be directed to the Office of Management and Budget, Office of Information and Regulatory Affairs, Attention: Department of Justice Desk Officer, 725–17th Street, NW., Room 10235, Washington, DC 20530.

Written comments and suggestions from the public and affected agencies concerning the proposed collection of information should address one or more of the following four points:

(1) Evaluate whether the proposed collection of information is necessary for the proper performance of the functions of the agency, including whether the information will be practical utility;

(2) Evaluate the accuracy of the agency's estimate of the burden of the proposed collection of information, including the validity of the methodology and assumptions used;

(3) Enhance the quality, utility, and clarity of the information to be collected; and

(4) Minimize the burden of the collection of information on those who are to respond, including through the use of appropriate automated, electronic, mechanical, or other technological collection techniques or other forms of information technology, *e.g.,* permitting electronic submission of responses.

Overview of This Information Collection

(1) *Type of Information Collection:* Revision of a currently approved information collection.

(2) *Title of Form/Collection:* Application of Waiver of Grounds of Excludability.

(3) *Agency form number, if any, and the applicable component of the Department of Justice sponsoring the collection:* Form I–690, Adjudications Division, Immigration and Naturalization Service.

(4) *Affected public who will be asked or required to respond, as well as a brief abstract:* Primary: Individuals or Households. This information on the application will be used by the Service in considering eligibility for legalization under sections 210 and 245A of the Immigration and Nationality Act.

(5) *An estimate of the total number of respondents and the amount of time estimated for an average respondent to respond:* 85 responses at 15 minutes (.25 hours) per response.

(6) *An estimate of the total public burden (in hours) associated with the collection:* 21 annual burden hours.

If you have additional comments, suggestions, or need a copy of the proposed information collection instrument with instructions, or additional information, please contact Richard A. Sloan 202–514–3291, Director, Regulations and Forms Services Division, Immigration and Naturalization Service, U.S. Department of Justice, 425 I Street, NW., Room 4034, Washington, DC 20536. Additionally, comments and/or suggestions regarding the item(s) contained in this notice, especially regarding the estimated public burden and associated response time may also be directed to Mr. Richard A. Sloan.

If additional information is required contact: Mr. Robert B. Briggs, Clearance Officer, United States Department of Justice, Information Management and Security Staff, Justice Management Division, Patrick Henry Building, 601 D Street, NW., Ste. 1600, Washington, DC 20530.

Dated: July 26, 2002.

Richard A. Sloan,

Department Clearance Officer, United States Department of Justice, Immigration and Naturalization Service.

[FR Doc. 02–19821 Filed 8–5–02; 8:45 am]

BILLING CODE 4410–10–M

DEPARTMENT OF LABOR

Office of the Secretary

Submission for OMB Review; Comment Request

July 30, 2002.

The Department of Labor (DOL) has submitted the following public information collection request (ICR) to the Office of Management and Budget (OMB) for review and approval in accordance with the Paperwork Reduction Act of 1995 (Pub. L. 104–13, 44 U.S.C. chapter 35). A copy of this ICR, with applicable supporting documentation, may be obtained by calling the Department of Labor. To obtain documentation contact Darrin King on (202) 693–4129 or E-Mail: *King-Darrin@dol.gov.*

Comments should be sent to Office of Information and Regulatory Affairs, Attn: OMB Desk Officer for OSHA, Office of Management and Budget, Room 10235, Washington, DC 20503 ((202) 395–7316), within 30 days from the date of this publication in the **Federal Register**.

The OMB is particularly interested in comments which:

- Evaluate whether the proposed collection of information is necessary for the proper performance of the functions of the agency, including whether the information will have practical utility;
- Evaluate the accuracy of the agency's estimate of the burden of the proposed collection of information, including the validity of the methodology and assumptions used;
- Enhance the quality, utility, and clarity of the information to be collected; and
- Minimize the burden of the collection of information on those who are to respond, including through the use of appropriate automated, electronic, mechanical, or other technological collection technological collection techniques or other forms of information technology, *e.g.,* permitting electronic submission of responses.

Agency: Occupational Safety and Health Administration (OSHA).

Type of Review: Extension of a currently approved collection

Title: Hazard Communication—29 CFR 1910.1200; Parts 1915, 1917, 1918, 1926, 1928.

OMB Number: 1218–0072.

Affected Public: Business or other for-profit; Farms; Federal Government; and State, Local, or Tribal Government.

Frequency: On occasion.

Type of Response: Recordkeeping and Third-party disclosure.

Number of Respondents: 6,035,925.

Requirement	Annual responses	Average response time (hours)	Estimated annual burden hours
1. Written Hazard Communication Program—New Establishments:			
Manufacturing	5,258	5.00	26,290
Non-Manufacturing	61,465	2.50	153,663
2. Written Hazard Communication Program—Existing Establishments:			
Manufacturing	154,644	1.00	154,644
Non-Manufacturing	2,259,726	0.50	1,129,863
3. Hazardous Determination	30,248	8	241,984
4. Existing Establishments Sending of MSDSs for New Hazardous:			
Manufacturing	1,014,462	0.14	142,025
Non-Manufacturing	3,434,784	0.14	480,870
5. New Establishments Sending of MSDSs for All Hazardous Chemicals:			
Manufacturing	465,648	0.14	65,191
Non-Manufacturing	1,261,262	0.14	176,577
6. Obtaining & Maintaining MSDSs—Existing Establishments:			
Manufacturing	154,644	1.00	154,644
Non-Manufacturing	2,259,726	1.00	2,259,726
7. Obtaining & Maintaining MSDSs—New Establishments:			
Manufacturing	465,648	0.14	65,191
Non-Manufacturing	1,261,262	0.14	176,577
8. Labeling Shipping Containers	0	0.00	0
9. Labeling In-Plant Containers	443,636,930	0.0033	1,464,002
10. Access to Trade Secrets	62,870	4.00	251,480
Employee Access	3,621,555	0.17	603,351
Federal Access	92,351	0.08	7,388
Total	460,242,484	.....	7,553,465

Total Annualized Capital/Startup Costs: $0.

Total Annual Costs (operating/maintaining systems or purchasing services): $494,078.

Description: 29 CFR 1910.1200; Parts 1915, 1917, 1918, 1926, and 1928 require all employers to establish hazard communication programs and to transmit information on the hazards of chemicals to their employees by means of container labels, material safety data sheets and training programs. These actions reduce the incidents of chemical-related illnesses and injury in the workplace.

Ira L. Mills,

Departmental Clearance Officer.

[FR Doc. 02–19855 Filed 8–5–02; 8:45 am]

BILLING CODE 4510–26–M

DEPARTMENT OF LABOR

Office of the Secretary

A China Labor Rule of Law Program

AGENCY: Bureau of International Labor Affairs, Department of Labor.

ACTION: Notice of Availability of Funds and Solicitation for Cooperative Agreement Applications (SGA 02–18).

This notice contains all of the necessary information and forms needed to apply for cooperative agreement funding.

SUMMARY: The U.S. Department of Labor (USDOL), Bureau of International Labor Affairs (ILAB), will award up to US $4.5 million through one or more cooperative agreements to an organization or organizations (''the applicant'') to develop and implement a program that focuses on the promotion of labor rule of law in the People's Republic of China (''China''). USDOL is seeking applications from qualified applicants for the development of a strategy for the enhancement of labor rule of law and for the implementation of such a program through collaboration with central and local government agencies, academic institutions, and NGOs. Each applicant will submit one proposal for the entire program. USDOL, however, reserves the right to award more than one cooperative agreement for the implementation of the projects.

DATES: The closing date for receipt of applications is September 4th, 2002. As described in Section III, A and B, applications must be received by 4:45 p.m. (Eastern Daylight Savings Time) at the address below. No exceptions to the mailing, delivery, and hand-delivery conditions set forth in this notice will be granted. Applications that do not meet the conditions set forth in this notice will not be honored.

ADDRESSES: Application forms will not be mailed. They are published in this **Federal Register** Notice, and in the **Federal Register** which may be obtained from your nearest U.S. Government office, public library or on-line at *http://www.archives.gov/federal_register/index.* Applications must be delivered to: U.S. Department of Labor, Procurement Services Center, 200 Constitution Avenue, NW, Room N–5416, Attention: Lisa Harvey, Reference: SGA 02–18, Washington, DC 20210. Applications sent by e-mail, telegram, or facsimile (FAX) will not be accepted. Applications sent by other delivery services, such as Federal Express, UPS, *etc.,* will be accepted; however, the applicant bears the responsibility for timely submission.

FOR FURTHER INFORMATION CONTACT: Lisa Harvey: e-mail address: *harvey-lisa@dol.gov.* All applicants are advised that U.S. mail delivery in the Washington, DC area has been slow and erratic due to the recent enhanced security measures. All applicants must take this into consideration when preparing to meet the application deadline. It is recommended that you confirm receipt of your application by contacting Lisa Harvey, U.S. Department of Labor, Procurement Services Center, telephone (202) 693–4570, prior to the closing deadline. All inquiries should reference SGA 02–18. See Section III.B for further information.

SUPPLEMENTARY INFORMATION: ILAB announces the availability of funds to be granted by cooperative agreement(s) to one or more qualifying organization to achieve the following program objectives: (1) Enhance the Chinese government's capacity to develop laws and regulations to implement internationally recognized workers rights; (2) promote greater awareness of labor law among Chinese workers and employers; (3) improve industrial relations and develop a national system to educate government officials, employers, workers and academics on worker rights, collective bargaining, and labor dispute prevention and resolution; and (4) enhance legal aid services to workers and migrant laborers, providing services through government and non-governmental organizations. The cooperative agreement(s) will be carried out through project(s) with China's national government in Beijing and through pilot projects in one or more of the following cities: Shenyang, Chengdu, Shanghai, and Guangzhou. Proposals of pilot projects in other cities will also be considered, provided that the cities are located within a reasonable distance from a U.S. Consulate General. In each city, the pilot project should focus on one or more of the above-mentioned objectives, depending on the specific needs of each city. In choosing cities for pilot project(s), applicants are encouraged to engage financial and human resources in the city or cities where the pilot project(s) is most likely to produce demonstrable results and success. It is neither necessary nor desirable to propose pilot projects in all these cities, unless the applicant can demonstrate that there are adequate financial and human resources to ensure project success. In addition, any successful pilot project should address the specific challenges in each locality but should also be mindful of the needs of national policymakers in China. Each pilot project should be relevant to the local labor conditions and problems and should supplement the overall program objectives. Finally, the designs of these pilot projects should reflect the understanding of and appropriate strategy to deal with China's current central-local relations, *i.e.,* proposals should be sensitive to the needs and conditions of municipal and provincial governments while also respecting national laws, procedures and policies.

Applicants are advised that USDOL is also currently soliciting grant applications under a separate SGA, SGA 02–17, to implement a program to improve mine safety in China.

The cooperative agreement(s) is to be actively managed by ILAB to assure the achievement of the stated objectives. Applicants are encouraged to be creative in proposing an innovative and cost-effective program that will have a demonstrable impact on achieving the overall objectives. Applicants are strongly encouraged to form partnerships with other national, international, or Chinese organizations to submit a joint proposal.

Limitation: Technical assistance under the proposed program may not be provided to the All-China Federation of Trade Unions. For additional information, *see* 22 U.S.C. 6981 (b)(3).

I. Background and Program Scope

A. Background: Labor Rule of Law

In China, several government agencies are responsible for administrating labor law at the national, provincial and municipal levels. At the national level, the Ministry of Labor and Social Security (MOLSS) is the principal policy-making institution.

The enforcement of national labor law and regulations is carried out by provincial and municipal bureaus of labor and social security, which are under the jurisdiction of the municipal or provincial government; they receive policy and technical guidance from MOLSS. Provincial and municipal governments also establish local regulations and policies for the implementation of national laws and policies.

(i) Labor Law Enforcement: Implementing of National Laws

Over the past decade, China has taken steps toward establishing laws and regulations and creating institutions in the labor area.[1] However, the enforcement of these laws and regulations remains problematic at both the national level as well as the local level. China's 1994 Labor Law establishes fundamental legal principles in the following nine areas:

- Promotion of employment

[1] See, for example, Chang Kai, Li Qi, and Bama Athreya, *A Comparison between International Labor Standards and Chinese Labor Standards,* August 2001, unpublished manuscript: available from the US-China Business Council or the International Labor Rights Fund; *CLB Analysis of the New Trade Union Law,* in *China Labor Bulletin, http://iso.china-labour.org.hk,* online February 28, 2002.

- Labor contracts and collective contracts
- Working hours, rest, and leave
- Wages
- Labor safety and sanitation
- Special protection for female staff and workers and juvenile workers
- Professional training
- Social insurance and welfare treatment
- Labor disputes

In each of these areas, the law provides the basic legal framework and guidelines but does not provide sufficient detail to implement these basic principles. The MOLSS formulates regulations and directions in each of the areas. Without adequate regulations, the government cannot protect the rights of workers as provided by the 1994 Labor Law. Enforcement is a major challenge in small and medium enterprises where violations (most often non-payment of wages and overtime and unsafe working conditions) reportedly occur most frequently.

Moreover, inspectors are not well trained as a result of the government's limited budget for training and the lack of modern training methods and materials. Many of the available training resources were developed in the 1960s and the training system is in dire need of modernization. Finally, traditional labor inspection techniques were developed for use in state-owned-enterprises (SOEs) under China's planned economy. China now needs a modern and capable inspection staff that can work to promote and enforce the law with privately owned enterprises, foreign invested enterprises, small to medium-sized SOEs, and township and village enterprises.

(ii) Worker Education: Promoting Awareness of Labor Laws

As China continues the transition toward a market-oriented economy, fear of unemployment often inhibits workers from exercising their rights at work. China's economic reforms have displaced about 150 million rural workers who seek employment in urban areas. Competition for jobs often leads workers to accept jobs that do not pay the legal minimum wage, over-time wages, holiday pay, maternity leave, or provide a safe and healthy working environment. It also leads to unscrupulous management practices and abuse by employers.

Most of the labor-intensive, low paying jobs in urban areas are filled by migrant workers, often young women, who have little education or employment experience. These workers have the greatest need to learn about their rights and responsibilities granted by national labor law.

Workers' lack of awareness and understanding of China's labor laws and regulations often prevents them from exercising their rights. The government and a very small number of NGOs are making some effort to educate workers about labor law. For example, several cities, including Shanghai, Guangzhou, and Shenzhen, initiated ad hoc workshops for job-seekers and migrant laborers to explain to them rules and regulations regarding work permits, wages and overtime payments, and other rights and obligations. A few NGOs in Guangzhou also provide information to migrant workers who seek guidance on employment laws regarding workplace disputes. However, these efforts cover only a small portion of the workforce and the services provided tend to be sporadic.

(iii) Industrial Relations: Training and Education on Rights, Collective Bargaining and Dispute Prevention and Resolution

Industrial relations in China are changing profoundly, but the legal and regulatory framework for industrial relations has not kept pace with these changes. There is no effective national structure for the promotion and education of negotiations among government, employers and workers.

An increasing number of workers are taking disputes to formal arbitration mechanisms. These mechanisms are not fully developed and are perceived as not always being staffed with well-trained neutral arbitrators. Chinese officials and analysts have spoken publicly about the need to adopt a new style of labor relations. Lawyers and workers, in small but potentially significant numbers, have begun to utilize the courts to adjudicate disputes and protect the rights of workers following the arbitration process.[2]

China currently has a small but growing corps of young lawyers, but few have expertise on labor issues. China has seen a sharp increase in labor disputes in recent years. According to official MOLSS statistics, arbitration committees nationwide handled over 135,000 labor disputes in 2000, an increase of 12.5 percent over the previous year.[3] Given China's evolving industrial relations, the need for legal and managerial professionals in the labor area is growing steadily.

The international community is lending technical assistance to China to address industrial relations issues. The International Labor Organization (ILO) is implementing a technical assistance project to improve human resource management and labor management relations in three cities in China.[4] The ILO project seeks to address three topics: (1) the development of high quality human resource practices; (2) the promotion of sound labor-management relations; and (3) the upgrading of working conditions and productivity in small and medium enterprises. Other international donors, such as the Ford Foundation and the government of the Netherlands, are supporting a number of small pilot projects that focus on legal aid to workers in Guangdong, Shanghai, and Beijing.[5]

(iv) Legal Aid: Improving Services to Workers

Women and migrants are China's most vulnerable workers.[6] Many workers do not seek effective protection from labor abuse because they are not aware of their rights and obligations under the law. While in recent years the Chinese government has enhanced its efforts to provide improved benefits and protections for workers, workers are frequently ignorant of these changes.

Local governments provide some legal assistance in all areas of law (criminal, civil and labor) to eligible citizens, including workers, through legal aid centers, but such assistance is extremely limited in both the number of citizens it serves and the quality of service provided. The legal aid centers are typically run by the local bureaus of justice, and are often under-staffed and under-budgeted. For example, in a district in Shanghai, where the legal aid services are supposedly the best in the country, the legal aid center is staffed by two lawyers who offer consulting services to qualified citizens on a walk-in basis and four additional law professionals who staff legal telephone hotlines. According to city officials, the center was visited by nearly 7,000 persons in the past year and received over 11,000 telephone inquiries. Such high levels of demand for such a small

[2] U.S. Department of State Cable, Unclas Beijing 2001, 011990, December 12, 2001.

[3] U.S. Department of State, *China: Country Reports on Human Rights Practices, 2001,* March 4, 2002.

[4] For more information, see ILO project CPR/00/MO1/SW1, available from ILO Washington DC branch office, 202–653–7652.

[5] It is advisable that the applicants contact these organizations directly to obtain further information about these projects. Ford Foundation Beijing Office, telephone 8610–6532–6668; Royal Netherlands Embassy in Beijing, telephone 8610–6532–1131.

[6] Asia Foundation working paper, *Migrant Women Workers and Emerging Civil Society in China,* Zhang Ye, October 22, 2001.

staff put the quality of service at risk, and limit the number of persons who can be assisted.

Some NGOs are beginning to provide legal aid services as a part of their overall mission. A handful of NGOs in Guangzhou and Shenzhen provide legal aid services to migrant workers, particularly to women. However, such NGOs are extremely limited in number and most lack the human and financial resources to expand their services beyond the several dozen cases they work on each year.

B. Program Scope

For any proposal to be considered responsive to this solicitation, it must contain proposed projects that cover all of the following four aspects, with each corresponding to issues identified in section A.

(i) Labor Legislation and Labor Law Administration

Applicants should seek to propose project(s) that (1) assist the government in developing laws and regulations, emphasizing employment promotion, labor contracts and labor inspection, to protect workers' rights as provided in China's 1994 Labor Law, taking into consideration ILO international labor standards; (2) develop a national system for the training of government officials concerned with implementation and enforcement of national labor laws and regulations; (3) provide the government with technical expertise and other resources for the training of officials at all levels, and; (4) develop training materials and techniques and provide training for labor inspectors to enhance their abilities and effectiveness. Applicants are encouraged to design pilot projects in localities and to engage local and central government agencies, as well as national universities, where appropriate.

(ii) Labor Law Awareness

All applications should include a means to develop an educational infrastructure on labor law to educate workers and employers about their legal rights, protections and responsibilities under national labor laws and regulations. Particular attention should be directed to reaching socially and economically disadvantaged groups, such as women and migrant workers; and privately owned enterprises. Applicants are encouraged to develop innovative forms of cooperative relationships with national organizations, including non-governmental organizations.

(iii) Industrial Relations

Applicants should include a project to (1) promote innovative forms of labor-management cooperation in the workplace; (2) develop practical and effective ways to improve the existing labor dispute prevention and resolution system; and (3) develop a national, sustainable system for the diffusion of knowledge and best international practices in the areas of worker rights, collective bargaining, and dispute prevention and resolution among key government officials, employers, workers, and academics.

(i) Legal Aid

All applicants should include a project to (1) work with appropriate organizations to provide legal services in the labor area to workers; (2) provide training both in the area of legal knowledge as well as effective methods of providing legal service to workers, especially migrant and women workers; (3) develop sustainable institutional capacities in China for the continuation of legal services to workers beyond the program period; and (4) develop a labor and social security legal information consultation system to provide a network platform for western provinces and finally establish a national network to provide legal consultation services in the labor area. Applicants are encouraged to form partnerships with NGOs, including universities and research institutes, which are already providing legal aid to workers. Applicants are strongly encouraged to form new partnerships in China for the same purpose.

II. Authority

ILAB is authorized to award and administer this program by the Departments of Labor, Health and Human Services, and Education and Related Agencies Appropriations Act, 2002, Pub. L. No. 107–116, 115 Stat. 2177 (2002).

III. Application Process

A. Eligible Applicants

Any commercial, international, or non-profit organization, which may include faith-based organizations, capable of successfully implementing a labor rule of law program in China, and successfully working with MOLSS, local labor bureaus, local work safety bureaus, courts, NGOs, Chinese legal professionals, Chinese universities and other appropriate agencies or organizations in China to meet the stated program objectives is eligible to apply for this cooperative agreement. An applicant may, and indeed is encouraged, to collaborate with other organizations in submitting a joint proposal, although in such a case a lead organization must be identified. The capability of an applicant and collaborating organizations to perform necessary aspects of this solicitation will be determined under Section V. B Rating Criteria and Selection.

Please note that eligible cooperative agreement applicants must not be classified under the Internal Revenue Code as a Section 501(c)(4) entity. See 26 U.S.C. 501(c)(4). According to the Lobbying Disclosure Act of 1995, as amended, 2 U.S.C. 1611, an organization, as described in section 501(c)(4) of the Internal Revenue Code of 1986, that engages in lobbying activities will not be eligible for the receipt of federal funds constituting an award, grant, or loan.

B. Submission of Applications

One (1) ink-signed original, complete application plus two (2) copies must be submitted to the U.S. Department of Labor, Procurement Services Center, 200 Constitution Avenue, NW., Room N–5416, Washington, DC 20210, not later than 4:45 p.m. EDST, September 4th, 2002.

The application must consist of two (2) separate parts. Part I of the application must contain the Standard Form (SF) 424, ''Application for Federal Assistance'' (Appendix A) (The entry on SF 424 for the Catalog of Federal Domestic Assistance Number (CFDA) is 17.700) and sections A–F of the Budget Information Form SF 424A (Appendix B). Part II must contain a technical proposal that demonstrates capabilities in accordance with the Statement of Work (Section IV.A) and the selection criteria (Section V.B).

To be considered responsive to this solicitation, the application must consist of the above-mentioned separate sections not to exceed 40 single-sided (8½″ x 11″), double-spaced, 10 to 12 pitch typed pages. Any applications that do not conform to these standards may be deemed non-responsive to this solicitation and may not be evaluated. Standard forms and attachments are not included in the page limit. The application must include a table of contents and an abstract summarizing the application in not more than two (2) pages. These pages are also *not* included in the page limits.

Upon completion of negotiations, the individual signing the SF 424 on behalf of the applicant must be authorized to bind the applicant.

C. Acceptable Methods of Submission

The grant application package must be received at the designated place by the date and time specified or it will not be considered. Any application received at the Procurement Services Center after 4:45 p.m. EDST, September 4, 2002, will not be considered unless it is received before the award is made and:

1. it was sent by registered or certified mail not later than the fifth calendar day before September 4, 2002;
2. it is determined by the Government that the late receipt was due solely to mishandling by the Government after receipt at the U.S. Department of Labor at the address indicated; or
3. it was sent by U.S. Postal Service Express Mail Next Day Service-Post Office to Addressee, not later than 5 p.m. at the place of mailing two (2) working days, excluding weekends and Federal holidays, prior to September 4, 2002.

The only acceptable evidence to establish the date of mailing of a late application sent by registered or certified mail is the U.S. Postal Service postmark on the envelope or wrapper and on the original receipt from the U.S. Postal Service. If the postmark is not legible, an application received after the above closing time and date shall be processed as if mailed late. ''Postmark'' means a printed, stamped or otherwise placed impression (not a postage meter machine impression) that is readily identifiable without further action as having been applied and affixed by an employee of the U.S. Postal Service on the date of mailing. Therefore applicants should request that the postal clerk place a legible hand cancellation ''bull's eye'' postmark on both the receipt and the envelope or wrapper.

The only acceptable evidence to establish the date of mailing of a late application sent by U.S. Postal Service Express Mail Next Day Service-Post Office to Addressee is the date entered by the Post Office receiving clerk on the ''Express Mail Next Day Service-Post Office to Addressee'' label and the postmark on the envelope or wrapper and on the original receipt from the U.S. Postal Service. ''Postmark'' has the same meaning as defined above. Therefore, applicants should request that the postal clerk place a legible hand cancellation ''bull's-eye'' postmark on both the receipt and the envelope or wrapper.

The only acceptable evidence to establish the time of receipt at the U.S. Department of Labor is the date/time stamp of the Procurement Services Center on the application wrapper or other documentary evidence or receipt maintained by that office.

Applications sent by e-mail, telegram, or facsimile (FAX) will not be accepted. Applications sent by other delivery services, such as Federal Express, UPS, *etc.,* will be accepted, however, the applicant bears the responsibility for timely submission. Because of delay in the receipt of mail in the Washington, DC area, it is recommended that you confirm receipt of your application by contacting Lisa Harvey, U.S. Department of Labor, Procurement Services Center, telephone (202) 693–4570 (this is not a toll-free number), prior to the closing deadline. All inquires should reference SGA 02–18.

D. Funding Levels

Approximately US$4.5 million is budgeted to fund this program. Although USDOL reserves the right to award more than one cooperative agreement, joint applications, consisting of more than one organization may apply to implement the program. Applicants will submit one application for the implementation of all projects (including pilot projects in localities) and are encouraged to utilize local organizations to implement portions of the program in order to institutionalize and sustain project improvements and reduce costs.

The award of any sub-contract to a local organization will be subject to USDOL approval. *See* Section IV.D Administrative Requirements.

E. Program Duration

The duration of the program is four (4) years. The start date of project activities will be negotiated upon the awarding of the cooperative agreements.

IV. Requirements

A. Statement or Work

In developing their proposals, applicants should develop a strategy for implementation of the project objectives as stated in the section **SUPPLEMENTARY INFORMATION.** The strategy should take into account the implementing environment in China as well as that of the specific cities selected for pilot projects. For the labor law administration component of the proposal (*see* Section I.B.(i)), the proposed strategy should clearly identify areas in which laws and regulations are to be developed under this program. The strategy should also identify the major components, methods and approaches of the proposed ''national system'' for the training of Chinese officials in the administration of labor law. Further, the strategy should identify cities for pilot projects and should clearly demonstrate how the pilot projects serve to achieve the overall program objectives. Finally, the strategy should clearly identify key organizations or universities with which the applicant proposes to form partnerships. For the labor law awareness component (*see* Section I.B.(ii)), the strategy should clearly identify the organization(s) or other venues through which workers and employers can be reached. For the industrial relations component (*see* Section I.B.(iii)), the strategy should identify partners and effective ways of providing education and training at the national level to prevent and resolve labor disputes. For the legal aid component (*see* section I.B.(iv)), the strategy should include both the identification of organizations to provide such services as well as plans to expand and sustain such services beyond the program period.

The strategy should also demonstrate how the applicant proposes to build upon the success of existing or past projects supported by other international donors, and coordinate activities among them at the local and national level. Further, the applicant should draft a strategy demonstrating how it will meet the project objectives by the end of the grant period, and how sustainability will be an integral element of the overall program.

The applicant must present a strategy to demonstrate that at least

- 80% of the target groups (targeted for training or education of labor law) exhibit an increased awareness of workers' and employers' rights as provided under national laws;
- 50% of the target groups (targeted for legal aid assistance) receive adequate legal assistance or counseling;
- 50% of targeted employers develop and implement workplace policies or programs aimed at improving employer-employee relations; and
- 80% of government inspectors of general labor law demonstrate greater skill in carrying out their functions.

The applicant should include a basis on which the target groups will be established (i.e., target industries, regions or disadvantaged groups), outline the information, education, and communication (IEC) materials that will be used as well as a strategy for translating education and capacity building efforts into concrete and demonstrable results. In addition, the applicant should develop sustainable innovative strategies for involving government and employers organizations, and nongovernmental organizations, as appropriate, in the development, implementation and enforcement of appropriate workplace

policies at the national and enterprise levels aimed at ensuring workers' and employers' rights under the law.

The applicant awarded the cooperative agreement (''grantee'') will be required to work cooperatively with stakeholders in China, including but not limited to, MOLSS, local bureaus of labor and social security, local bureaus of work safety, provincial and city governments, NGOs, universities, research institutions, and other national or international organizations that work in similar areas. In addition, the grantee is expected to identify one or more key national or regional organizations that are capable of ensuring the sustainability of the program beyond the grant period.

B. Deliverables

Following the award of the cooperative agreement(s), unless otherwise indicated, the grantee must submit copies of all required reports to USDOL by the specified due dates. Other documents, such as project designs, are to be submitted by mutually agreed-upon deadlines.

1. Project Designs

Grantee(s) will travel to cities in China with USDOL officials on a project design mission trip, draft the design, and submit a project document in the format established by USDOL, to include a background/justification section, project strategy (objectives, outputs, activities, indicators), project implementation timetable, project management organizational chart, project budget, logical framework and performance monitoring plan to systematically monitor project results. The document will also include sections, which cover coordination strategies, project management, and sustainability of project improvements involving government, employers' and workers' organizations as well as other nongovernmental organizations as appropriate. The project design will be drawn, in part, from the proposal written in response to this solicitation.

2. Technical Progress Reports

The grantee(s) must furnish a typed technical report to USDOL on a quarterly basis, no later than 15 days from the last date of each quarter, *i.e.*, 31 March, 30 June, 30 September and 31 December of each year. The 30 June (2nd quarter) and 31 December (4th quarter) reports are abbreviated and need only indicate whether the work plan was fully implemented and if not, explain why not and attach the amended work plan. The grantee(s) must also furnish a separate financial report (SF 272) to USDOL on the same quarterly basis. The format for the technical progress report will be the standard format developed by USDOL and must contain the following information:

a. For each project objective, an accurate account of activities carried out under that objective during the reporting period as it relates to the work plan;

b. Major trends in the project that note particular success with a particular activity or trends that indicate a need to readjust or expand the work plan;

c. An account of problems, proposed solutions, actions taken or required regarding implementation of the project;

d. New proposals for activities, staffing, funding, etc.;

e. Lessons learned in project implementation;

f. Future actions planned in support of each project objective;

g. An accounting of staff and any sub-contractor hours expended; and

h. Aggregate amount of costs incurred during the reporting period, including estimated expenditures vs. budget.

3. Annual Work Plan

An annual work plan for each project will be submitted within 45 days after the approval of the project design by USDOL. Subsequent annual work plans, when revised, will be delivered to reflect modifications in implementation, no later than one year following submission of the previous work plan; or to reflect revisions based on recommendations made during mid-term evaluations, no later than 30 days following the mid-term evaluation.

4. Monitoring and Evaluation

A performance monitoring plan will be developed in collaboration with USDOL, including beginning and ending dates for projects, planned and actual dates for mid-term and final project evaluations, and will be included as part of the submission of the project document for USDOL approval. The plan will include performance indicators and instruments to collect and report on performance data on a semi-annual basis.

5. Evaluation Reports

The Grant Officer's Technical Representative (GOTR) will determine whether a mid-term evaluation will be conducted by an internal or external evaluation team. The final evaluation will be external in nature. In all cases, evaluations will be objective and carried out by independent evaluators. The grantee(s) must respond to any comments and recommendations resulting from the review of the mid-term report and will submit a work plan for implementing the recommendations of the mid-term report within 15 days following formal submission of the report to the grantee(s) by USDOL. Applicants need to allocate funds for these activities in the proposed budget.

C. Production of Deliverables

1. Materials Prepared and Purchased Under the Cooperative Agreement.

The grantee(s) must submit to USDOL all media-related and educational materials developed by it or its sub-contractor under this cooperative agreement(s), including relevant press releases, for use in this project(s) before they are reproduced, published, or used. The grantee(s) must consult with USDOL to ensure that materials are compatible with USDOL materials relating to the program, *i.e.*, public relations material such as video and web site. USDOL considers brochures, pamphlets, videotapes, slide-tape shows, curricula, and any other training materials used in the program, educational materials. USDOL will review materials for technical accuracy. USDOL will also review training curricula and purchased training materials for accuracy before they are used. The grantee(s) must obtain prior approval from the Grant Officer for all materials developed or purchased under this cooperative agreement. All materials produced by grantee(s) must be provided to USDOL in a digital format for possible publication on the Internet by USDOL.

2. Acknowledgment of USDOL Funding

In all circumstances, the following must be displayed on printed materials:

Preparation of this item was funded by the United States Department of Labor under Cooperative Agreement No. [insert the appropriate cooperative agreement number].

When issuing statements, press releases, requests for proposals, bid solicitations, and other documents describing projects or programs funded in whole or in part with Federal money, all grantees receiving Federal funds, including State and local governments and recipients of research grants, must clearly state:

a. The percentage of the total costs of the program or project that will be financed with Federal money;

b. The dollar amount of Federal funds for the project or program; and

c. The percentage and dollar amount of the total costs of the project or program that will be financed by non-governmental sources.

In consultation with USDOL, USDOL's role will be acknowledged in one of the following ways:

a. The USDOL logo may be applied to USDOL-funded material prepared for world-wide distribution, including posters, videos, pamphlets, research documents, national survey results, impact evaluations, best practice reports, and other publications of global interest. The grantee(s) will consult with USDOL on whether the logo should be used on any such items prior to final draft or final preparation for distribution. In no event shall the USDOL logo be placed on any item until USDOL has given the grantee written permission to use the logo, after obtaining appropriate internal USDOL approval for use of the logo on the item.

b. If the USDOL determines the logo is not appropriate and does not give written permission, the following notice must appear on the document:

This document does not necessarily reflect the views or policies of the U.S. Department of Labor, nor does mention of trade names, commercial products, or organizations imply endorsement by the U.S. Government.

D. Administrative Requirements

1. General

Grantee organizations will be subject to applicable Federal laws (including provisions of appropriations law) and the applicable Office of Management and Budget (OMB) Circulars. Determinations of allowable costs will be made in accordance with the applicable Federal cost principles, *i.e.,* Non-Profit Organizations—OMB Circular A–122. The cooperative agreement(s) awarded under this SGA will be subject to the following administrative standards and provisions, if applicable:

29 CFR part 36—Federal Standards for Nondiscrimination on the Basis of Sex in Education Programs or Activities Receiving Federal Financial Assistance.

29 CFR part 93—New Restrictions on Lobbying.

29 CFR part 95—Uniform Administrative Requirements for Grants and Agreements with Institutions of Higher Education, Hospitals and Other Non-Profit Organizations, and with Commercial Organizations, Foreign Governments, Organizations Under the Jurisdiction of Foreign Governments and International Organizations.

29 CFR part 96—Federal Standards for Audit of Federally Funded Grants, Contracts and Agreements.

29 CFR part 98—Federal Standards for Government-wide Debarment and Suspension (Nonprocurement) and Government-wide Requirements for Drug-Free Workplace (Grants).

29 CFR part 99—Federal Standards for Audits of States, Local Governments, and Non-Profit Organizations.

2. Sub-Contracts

Sub-contracts must be awarded in accordance with 29 CFR 95.40–48. In compliance with Executive Orders 12876 as amended, 13230, 12928, and 13021 as amended, the grantee(s) is strongly encouraged to provide subcontracting opportunities to Historically Black Colleges and Universities, Hispanic-Serving Institutions and Tribal Colleges and Universities.

3. Key Personnel

The applicant must list the individual(s) who has been designated as having primary responsibility for the conduct and completion of all work in project(s) it proposes. The grantee(s) agrees to inform the GOTR whenever it appears impossible for one or more of these individual(s) to continue work on the project as planned. The grantee(s) may nominate substitute personnel for approval of the GOTR; however, the grantee(s) must obtain prior approval from the Grant Officer for all key personnel. If the Grant Officer determines not to approve the personnel change, he/she reserves the right to terminate the cooperative agreement.

4. Encumbrance of Cooperative Agreement Funds

Cooperative agreement funds may not be encumbered/obligated by the grantee(s) before or after the cooperative agreement period of performance. Encumbrances/obligations outstanding as of the end of the cooperative agreement period may be liquidated (paid out) after the end of the cooperative agreement period. Such encumbrances/obligations may involve only commitments for which a need existed during the cooperative agreement period and which are supported by approved contracts, purchase orders, requisitions, invoices, bills, or other evidence of liability consistent with the grantee(s)'s purchasing procedures and incurred within the cooperative agreement period. All encumbrances/obligations incurred during the cooperative agreement period must be liquidated within 90 days after the end of the cooperative agreement period, if practicable.

5. Site Visits

USDOL, through its authorized representatives, has the right, at all reasonable times, to make site visits to review project accomplishments and management control systems and to provide such technical assistance as may be required. If USDOL makes any site visit on the premises of the grantee(s) or a sub-contractor(s) under this cooperative agreement(s), the grantee(s) must provide and must require its sub-contractors to provide all reasonable facilities and assistance for the safety and convenience of the Government representatives in the performance of their duties. All site visits and evaluations must be performed in such a manner as will not unduly delay the work.

V. Review and Selection of Applications for Cooperative Agreement Award

A. The Review Process

USDOL will screen all applications to determine whether all required elements are present and clearly identifiable. A technical panel will objectively rate each complete application against the criteria described in this announcement. The panel recommendations to the Grant Officer are advisory in nature. The Grant Officer may elect to select one or more grantee/s on the basis of the initial proposal submission; or, the Grant Officer may establish a competitive or technically acceptable range for the purpose of selecting qualified applicants. If deemed appropriate, following the Grant Officer's call for the preparation and receipt of final revisions of proposals, the evaluation process described above will be repeated to consider such revisions. The Grant Officer will make a final selection determination based on what is most advantageous to the Government, considering factors such as panel findings, geographic presence of the applicants, the best value to the Government, cost, and other factors. The Grant Officer's determination for award under this SGA 02–18 is final.

Notice: Selection of an organization as a cooperative agreement recipient does not constitute approval of the cooperative agreement application as submitted. Before the actual cooperative agreement is awarded, the Grant Officer may enter into negotiations concerning such items as program components, funding levels, and administrative systems. If the negotiations do not result in an acceptable submission, the Grant Officer reserves the right to terminate the negotiation and decline to fund the application.

B. Rating Criteria and Selection

The technical panel will review grant applicants against the criteria listed below on the basis of 100 points.

The criteria are presented in the order of emphasis that they will receive.

1. Approach, Understanding of the Issue, and Program Plans (40 points)

a. *Overview.* This section of the proposal must explain the strategy employed by the applicant to achieve the following results:

(1) At least 80% of the target group (targeted for training or education of labor law) exhibits an increased awareness of workers' and employers' rights as provided under the laws;

(2) At least 50% of the target group (targeted for legal aid assistance) receive adequate legal assistance or counseling;

(3) At least 50% of targeted employers have developed and implemented workplace policies or programs aimed at improving employer-employee relations; and

(4) At least 80% of targeted government labor law inspectors acquire increased skills to carry out their functions.

The applicant must describe in detail the proposed approach to comply with each requirement in Section IV.A of this solicitation, including all tasks and methods to be utilized to implement the project. Also, the applicant must propose projects that would address issues discussed in Section I.(A) and (B).

b. *Logical Framework.* The strategy should include an outline of the objectives, activities and indicators envisioned for implementation of the program.

c. *Implementation Plan.* The applicant must submit an implementation plan for the entire program, preferably with a visual such as a Gantt chart. The implementation plan should outline the approach that will be used to implement the program. The plan should list the activities envisioned for the life of the program as well as scheduling of activities by objective, starting with the execution of the cooperative agreement and ending with the final report. In describing the implementation plan, the applicant must address the following points:

(1) Describe the use of existing or potential infrastructure and use of qualified personnel, including qualified nationals, to implement the projects in Beijing as well as in selected pilot project cities. The applicant also must include a project organizational chart, demonstrating management structure, key personnel positions and indicating proposed links with the relevant government ministries, local government agencies/bureaus, NGOs, universities and other significant local actors.

(2) Develop a list of activities and explain how each relates to the overall development objectives as stated in Section I.

(3) Explain how appropriate IEC materials and training curriculum will be developed.

(4) Explain the strategy for coordinating activities conducted at the central government level with those conducted at the local (provincial/city) level.

(5) Demonstrate how the program will strengthen national government's capacity and enhance policies to protect the rights of workers as prescribed by national law.

(6) Demonstrate how the grantee would systematically monitor and report on project performance to measure the achievement of the project objective(s).

(7) Demonstrate how the grantee would build national and local capacity to ensure that project efforts to enhance the implementation and enforcement of national labor laws would be sustained after completion of the project.

d. *Management and Staff Loading Plan.* The management plan must also include a management and staff loading plan. The management plan should include the following:

(1) If two organizations are applying for the award in collaboration, they must demonstrate an approach to ensure successful collaboration including clear delineation of respective roles and responsibilities. The applicants must also identify the lead organization and submit the collaboration agreement.

(2) A project organization chart and accompanying narrative which differentiates between elements of the applicant's staff and subcontractors or consultants who will be retained;

(3) A description of the functional relationship between elements of the project's organization; and

(4) The identity of the individual(s) responsible for project management and the lines of authority between this/these individual(s) and other elements of the project.

The staff loading plan must identify all key tasks and the person-days required to complete each task. Labor estimates for each task must be broken down by individuals assigned to the task, including sub-contractors and consultants. All key tasks must be charted to show time required to perform them by months or weeks.

2. Experience and Qualifications of the Applicant (25 points)

The evaluation criteria in this category are as follows:

a. The applicant organization and collaborating organizations applying for the award must demonstrate experience of working on developmental projects in China or in countries with similar political, economic and social constraints.

b. The applicant must demonstrate prior experience of working directly with government ministries, local government organizations, employers, workers, NGOs and academic institutions, as well as with U.S. Missions, in the area of labor law.

c. The applicant must also demonstrate that it can negotiate and implement developmental projects in China and that it has the appropriate international experience and expertise to carry out program responsibilities in China.

d. The applicant must demonstrate that it has staff or is able to recruit staff that can communicate effectively with Chinese employers, workers, migrant workers, and Chinese officials. Preference will be given to applicant organizations with staff that have Chinese language skills.

e. The proposal must include information regarding previous grants, contracts or cooperative agreements relevant to this solicitation. This information must include:

(1) The organization for whom the work was done;

(2) A contact person in that organization with his/her current phone number;

(3) The dollar value of the grant, contract or cooperative agreement for the project(s);

(4) The time frame and administrative and programmatic effort involved in the project(s);

(5) A brief summary of the work performed; and

(6) A brief summary of accomplishments.

This information on previous grants and contracts shall be provided in appendices and will *not* count toward the 40-page maximum page requirement.

3. Experience and Qualifications of Key Personnel (25 points)

This section of the application must include sufficient information for judging the quality and the competence of key staff proposed to be assigned to the project(s) proposed to assure that they meet the required qualifications. Successful performance of the proposed

work depends heavily on the qualifications of the individuals committed to the project. Accordingly, in its evaluation of each application, USDOL will place emphasis on the applicant's commitment of key personnel qualified for the work involved in accomplishing the assigned tasks. Information provided on the experience and educational background of personnel must indicate the following:

(a) The identity of key personnel assigned to the project. ''Key personnel'' are staff who are essential to the successful operation of the project and completion of the proposed work and, therefore, may not be replaced or have their hours reduced without the approval of the Grant Officer.

(b) The educational background, Chinese language skills, and experience of key personnel.

(c) The special capabilities of key personnel that demonstrate prior experience in organizing, managing and performing similar efforts.

(d) The current employment status of key personnel and availability for this project. The applicant must also indicate whether the proposed work will be performed by persons currently employed or is dependent upon planned recruitment or sub-contracting.

Note that management and professional technical staff members comprising the applicant's proposed team should be individuals who have prior experience with organizations working in similar efforts, and are fully qualified to perform work specified in the Statement of Work. Where sub-contractors or outside assistance is proposed, organizational control should be clearly delineated to ensure responsiveness to the needs of USDOL. Key personnel must sign letters of agreement to serve on the project, and indicate availability to commence work within three weeks of grant award.

The following information must be furnished:

(a) The applicant must designate a Program Director and other key personnel to oversee the program. The Program Director must have a minimum of three years of professional experience in a leadership role in implementation of complex labor programs in developing countries. He or she must demonstrate sufficient knowledge of and understanding of China's political and economic development, its government, and the complexity of China's current state-local relations. Chinese language (Mandarin) proficiency is highly desirable.

(b) The applicant should specify other key personnel proposed to carry out the requirements of this solicitation.

(c) An organization chart showing the applicant's proposed organizational structure for performing task requirements for the project(s) proposed, along with a description of the roles and responsibilities of all key personnel proposed for this project(s). The chart should also differentiate between elements of the applicant's staff and sub-contractors or consultants who will be retained.

(d) Identify all key tasks and the person-days required to complete each task. Labor estimates for each task must be broken down by individuals assigned to the task, including sub-contractors and consultants. All key tasks must be charted to show time required to perform them by months or weeks.

(e) A resume for each of the key personnel to be assigned to the program. At a minimum, each resume must include: The individual's current employment status and previous work experience, including position title, duties performed, dates in position, employing organizations and educational background, including Chinese language skills (if any). Duties must be clearly defined in terms of role performed, i.e., manager, team leader, consultant, *etc.* (Resumes must be included as attachments, which do not count toward the page limitation.)

(f) The special capabilities of staff that demonstrate prior experience in organization, managing and performing similar efforts.

(g) The current employment status of key personnel proposed for work under the cooperative agreement, *i.e.*, whether personnel are currently employed by the organization or whether their employment depends upon planned recruitment or sub-contracting.

4. Budget Plan (10 points)

The applicant must develop one proposed budget for the implementation of the entire program, including pilot projects in localities. This section of the application must explain the costs for performing all of the requirements presented in this solicitation and for producing all required reports and other deliverables presented in this solicitation; costs must include labor, training, material production and dissemination, equipment, travel and other related costs. The budget plan will be evaluated solely for the purpose of determining the efficient and effective allocation of funding for proposed program implementation. Preference may be given to applicants with low administrative costs. Administrative costs shall be reflected separately on the budget plan from programmatic costs.

The budget must comply with Federal cost principles (which can be found in the applicable OMB Circulars) and with ILAB budget requirements contained in the application instructions in Section III of this solicitation.

This stated commitment will be incorporated into the text of the cooperative agreement with the selected applicant(s).

Signed in Washington, DC, on this 31 day of July, 2002.

Daniel P. Murphy,

Director, Procurement Services Center.

BILLING CODE 4510–28–P

APPLICATION FOR FEDERAL ASSISTANCE

OMB Approval No. 0348-0043

2. DATE SUBMITTED	Applicant Identifier	
3. DATE RECEIVED BY STATE	State Application Identifier	
4. DATE RECEIVED BY FEDERAL AGENCY	Federal Identifier	

1. TYPE OF SUBMISSION:

Application: ☐ Construction ☐ Non-Construction

Preapplication: ☐ Construction ☐ Non-Construction

5. APPLICANT INFORMATION

Legal Name:

Organizational Unit:

Address *(give city, county, State, and zip code)*:

Name and telephone number of person to be contacted on matters involving this application *(give area code)*

6. EMPLOYER IDENTIFICATION NUMBER *(EIN)*:

☐☐ — ☐☐☐☐☐☐☐

7. TYPE OF APPLICANT: *(enter appropriate letter in box)* ☐

A. State
B. County
C. Municipal
D. Township
E. Interstate
F. Intermunicipal
G. Special District
H. Independent School Dist.
I. State Controlled Institution of Higher Learning
J. Private University
K. Indian Tribe
L. Individual
M. Profit Organization
N. Other (Specify) _____

8. TYPE OF APPLICATION:

☐ New ☐ Continuation ☐ Revision

If Revision, enter appropriate letter(s) in box(es) ☐ ☐

A. Increase Award B. Decrease Award C. Increase Duration
D. Decrease Duration Other*(specify)*:

_____

9. NAME OF FEDERAL AGENCY:

10. CATALOG OF FEDERAL DOMESTIC ASSISTANCE NUMBER:

☐☐ — ☐☐☐

TITLE:

11. DESCRIPTIVE TITLE OF APPLICANT'S PROJECT:

12. AREAS AFFECTED BY PROJECT *(Cities, Counties, States, etc.)*:

13. PROPOSED PROJECT

Start Date	Ending Date

14. CONGRESSIONAL DISTRICTS OF:

a. Applicant

b. Project

15. ESTIMATED FUNDING:

a. Federal	$ .00
b. Applicant	$ .00
c. State	$ .00
d. Local	$ .00
e. Other	$ .00
f. Program Income	$ .00
g. TOTAL	$ 0.00

16. IS APPLICATION SUBJECT TO REVIEW BY STATE EXECUTIVE ORDER 12372 PROCESS?

a. YES. THIS PREAPPLICATION/APPLICATION WAS MADE AVAILABLE TO THE STATE EXECUTIVE ORDER 12372 PROCESS FOR REVIEW ON:

DATE _____

b. No. ☐ PROGRAM IS NOT COVERED BY E. O. 12372
☐ OR PROGRAM HAS NOT BEEN SELECTED BY STATE FOR REVIEW

17. IS THE APPLICANT DELINQUENT ON ANY FEDERAL DEBT?

☐ Yes If "Yes," attach an explanation. ☐ No

18. TO THE BEST OF MY KNOWLEDGE AND BELIEF, ALL DATA IN THIS APPLICATION/PREAPPLICATION ARE TRUE AND CORRECT, THE DOCUMENT HAS BEEN DULY AUTHORIZED BY THE GOVERNING BODY OF THE APPLICANT AND THE APPLICANT WILL COMPLY WITH THE ATTACHED ASSURANCES IF THE ASSISTANCE IS AWARDED.

a. Type Name of Authorized Representative	b. Title	c. Telephone Number
d. Signature of Authorized Representative		e. Date Signed

Previous Edition Usable
Authorized for Local Reproduction

Standard Form 424 (Rev. 7-97)
Prescribed by OMB Circular A-102

INSTRUCTIONS FOR THE SF-424

Public reporting burden for this collection of information is estimated to average 45 minutes per response, including time for reviewing instructions, searching existing data sources, gathering and maintaining the data needed, and completing and reviewing the collection of information. Send comments regarding the burden estimate or any other aspect of this collection of information, including suggestions for reducing this burden, to the Office of Management and Budget, Paperwork Reduction Project (0348-0043), Washington, DC 20503.

PLEASE DO NOT RETURN YOUR COMPLETED FORM TO THE OFFICE OF MANAGEMENT AND BUDGET. SEND IT TO THE ADDRESS PROVIDED BY THE SPONSORING AGENCY.

This is a standard form used by applicants as a required facesheet for preapplications and applications submitted for Federal assistance. It will be used by Federal agencies to obtain applicant certification that States which have established a review and comment procedure in response to Executive Order 12372 and have selected the program to be included in their process, have been given an opportunity to review the applicant's submission.

Item:	Entry:
1.	Self-explanatory.
2.	Date application submitted to Federal agency (or State if applicable) and applicant's control number (if applicable).
3.	State use only (if applicable).
4.	If this application is to continue or revise an existing award, enter present Federal identifier number. If for a new project, leave blank.
5.	Legal name of applicant, name of primary organizational unit which will undertake the assistance activity, complete address of the applicant, and name and telephone number of the person to contact on matters related to this application.
6.	Enter Employer Identification Number (EIN) as assigned by the Internal Revenue Service.
7.	Enter the appropriate letter in the space provided.
8.	Check appropriate box and enter appropriate letter(s) in the space(s) provided: -- "New" means a new assistance award. -- "Continuation" means an extension for an additional funding/budget period for a project with a projected completion date. -- "Revision" means any change in the Federal Government's financial obligation or contingent liability from an existing obligation.
9.	Name of Federal agency from which assistance is being requested with this application.
10.	Use the Catalog of Federal Domestic Assistance number and title of the program under which assistance is requested.
11.	Enter a brief descriptive title of the project. If more than one program is involved, you should append an explanation on a separate sheet. If appropriate (e.g., construction or real property projects), attach a map showing project location. For preapplications, use a separate sheet to provide a summary description of this project.
12.	List only the largest political entities affected (e.g., State, counties, cities).
13.	Self-explanatory.
14.	List the applicant's Congressional District and any District(s) affected by the program or project.
15.	Amount requested or to be contributed during the first funding/budget period by each contributor. Value of in-kind contributions should be included on appropriate lines as applicable. If the action will result in a dollar change to an existing award, indicate *only* the amount of the change. For decreases, enclose the amounts in parentheses. If both basic and supplemental amounts are included, show breakdown on an attached sheet. For multiple program funding, use totals and show breakdown using same categories as item 15.
16.	Applicants should contact the State Single Point of Contact (SPOC) for Federal Executive Order 12372 to determine whether the application is subject to the State intergovernmental review process.
17.	This question applies to the applicant organization, not the person who signs as the authorized representative. Categories of debt include delinquent audit disallowances, loans and taxes.
18.	To be signed by the authorized representative of the applicant. A copy of the governing body's authorization for you to sign this application as official representative must be on file in the applicant's office. (Certain Federal agencies may require that this authorization be submitted as part of the application.)

SF-424 (Rev. 7-97) Back

BUDGET INFORMATION - Non-Construction Programs

OMB Approval No. 0348-0044

SECTION A - BUDGET SUMMARY

Grant Program Function or Activity (a)	Catalog of Federal Domestic Assistance Number (b)	Estimated Unobligated Funds		New or Revised Budget		
		Federal (c)	Non-Federal (d)	Federal (e)	Non-Federal (f)	Total (g)
1.		$	$	$	$	$ 0.00
2.						0.00
3.						0.00
4.						0.00
5. Totals		$ 0.00	$ 0.00	$ 0.00	$ 0.00	$ 0.00

SECTION B - BUDGET CATEGORIES

6. Object Class Categories	GRANT PROGRAM, FUNCTION OR ACTIVITY				Total
	(1)	(2)	(3)	(4)	(5)
a. Personnel	$	$	$	$	$ 0.00
b. Fringe Benefits					0.00
c. Travel					0.00
d. Equipment					0.00
e. Supplies					0.00
f. Contractual					0.00
g. Construction					0.00
h. Other					0.00
i. Total Direct Charges *(sum of 6a-6h)*	0.00	0.00	0.00	0.00	0.00
j. Indirect Charges					0.00
k. TOTALS *(sum of 6i and 6j)*	$ 0.00	$ 0.00	$ 0.00	$ 0.00	$ 0.00
7. Program Income	$	$	$	$	$ 0.00

Authorized for Local Reproduction

Standard Form 424A (Rev. 7-97)
Prescribed by OMB Circular A-102

Previous Edition Usable

SECTION C - NON-FEDERAL RESOURCES				
(a) Grant Program	(b) Applicant	(c) State	(d) Other Sources	(e) TOTALS
8.	$	$	$	$ 0.00
9.				0.00
10.				0.00
11.				0.00
12. TOTAL *(sum of lines 8-11)*	$ 0.00	$ 0.00	$ 0.00	$ 0.00

SECTION D - FORECASTED CASH NEEDS					
	Total for 1st Year	1st Quarter	2nd Quarter	3rd Quarter	4th Quarter
13. Federal	$ 0.00	$	$	$	$
14. Non-Federal	0.00				
15. TOTAL *(sum of lines 13 and 14)*	$ 0.00	$ 0.00	$ 0.00	$ 0.00	$ 0.00

SECTION E - BUDGET ESTIMATES OF FEDERAL FUNDS NEEDED FOR BALANCE OF THE PROJECT				
(a) Grant Program	FUTURE FUNDING PERIODS (Years)			
	(b) First	(c) Second	(d) Third	(e) Fourth
16.	$	$	$	$
17.				
18.				
19.				
20. TOTAL *(sum of lines 16-19)*	$ 0.00	$ 0.00	$ 0.00	$ 0.00

SECTION F - OTHER BUDGET INFORMATION	
21. Direct Charges:	22. Indirect Charges:
23. Remarks:	

Authorized for Local Reproduction

Standard Form 424A (Rev. 7-97) Page 2

INSTRUCTIONS FOR THE SF-424A

Public reporting burden for this collection of information is estimated to average 180 minutes per response, including time for reviewing instructions, searching existing data sources, gathering and maintaining the data needed, and completing and reviewing the collection of information. Send comments regarding the burden estimate or any other aspect of this collection of information, including suggestions for reducing this burden, to the Office of Management and Budget, Paperwork Reduction Project (0348-0044), Washington, DC 20503.

PLEASE DO NOT RETURN YOUR COMPLETED FORM TO THE OFFICE OF MANAGEMENT AND BUDGET. SEND IT TO THE ADDRESS PROVIDED BY THE SPONSORING AGENCY.

General Instructions

This form is designed so that application can be made for funds from one or more grant programs. In preparing the budget, adhere to any existing Federal grantor agency guidelines which prescribe how and whether budgeted amounts should be separately shown for different functions or activities within the program. For some programs, grantor agencies may require budgets to be separately shown by function or activity. For other programs, grantor agencies may require a breakdown by function or activity. Sections A, B, C, and D should include budget estimates for the whole project except when applying for assistance which requires Federal authorization in annual or other funding period increments. In the latter case, Sections A, B, C, and D should provide the budget for the first budget period (usually a year) and Section E should present the need for Federal assistance in the subsequent budget periods. All applications should contain a breakdown by the object class categories shown in Lines a-k of Section B.

Section A. Budget Summary Lines 1-4 Columns (a) and (b)

For applications pertaining to a *single* Federal grant program (Federal Domestic Assistance Catalog number) and *not requiring* a functional or activity breakdown, enter on Line 1 under Column (a) the Catalog program title and the Catalog number in Column (b).

For applications pertaining to a *single* program *requiring* budget amounts by multiple functions or activities, enter the name of each activity or function on each line in Column (a), and enter the Catalog number in Column (b). For applications pertaining to multiple programs where none of the programs require a breakdown by function or activity, enter the Catalog program title on each line in *Column* (a) and the respective Catalog number on each line in Column (b).

For applications pertaining to *multiple* programs where one or more programs *require* a breakdown by function or activity, prepare a separate sheet for each program requiring the breakdown. Additional sheets should be used when one form does not provide adequate space for all breakdown of data required. However, when more than one sheet is used, the first page should provide the summary totals by programs.

Lines 1-4, Columns (c) through (g)

For new applications, leave Column (c) and (d) blank. For each line entry in Columns (a) and (b), enter in Columns (e), (f), and (g) the appropriate amounts of funds needed to support the project for the first funding period (usually a year).

For continuing grant program applications, submit these forms before the end of each funding period as required by the grantor agency. Enter in Columns (c) and (d) the estimated amounts of funds which will remain unobligated at the end of the grant funding period only if the Federal grantor agency instructions provide for this. Otherwise, leave these columns blank. Enter in columns (e) and (f) the amounts of funds needed for the upcoming period. The amount(s) in Column (g) should be the sum of amounts in Columns (e) and (f).

For supplemental grants and changes to existing grants, do not use Columns (c) and (d). Enter in Column (e) the amount of the increase or decrease of Federal funds and enter in Column (f) the amount of the increase or decrease of non-Federal funds. In Column (g) enter the new total budgeted amount (Federal and non-Federal) which includes the total previous authorized budgeted amounts plus or minus, as appropriate, the amounts shown in Columns (e) and (f). The amount(s) in Column (g) should not equal the sum of amounts in Columns (e) and (f).

Line 5 - Show the totals for all columns used.

Section B Budget Categories

In the column headings (1) through (4), enter the titles of the same programs, functions, and activities shown on Lines 1-4, Column (a), Section A. When additional sheets are prepared for Section A, provide similar column headings on each sheet. For each program, function or activity, fill in the total requirements for funds (both Federal and non-Federal) by object class categories.

Line 6a-i - Show the totals of Lines 6a to 6h in each column.

Line 6j - Show the amount of indirect cost.

Line 6k - Enter the total of amounts on Lines 6i and 6j. For all applications for new grants and continuation grants the total amount in column (5), Line 6k, should be the same as the total amount shown in Section A, Column (g), Line 5. For supplemental grants and changes to grants, the total amount of the increase or decrease as shown in Columns (1)-(4), Line 6k should be the same as the sum of the amounts in Section A, Columns (e) and (f) on Line 5.

Line 7 - Enter the estimated amount of income, if any, expected to be generated from this project. Do not add or subtract this amount from the total project amount, Show under the program

INSTRUCTIONS FOR THE SF-424A (continued)

narrative statement the nature and source of income. The estimated amount of program income may be considered by the Federal grantor agency in determining the total amount of the grant.

Section C. Non-Federal Resources

Lines 8-11 Enter amounts of non-Federal resources that will be used on the grant. If in-kind contributions are included, provide a brief explanation on a separate sheet.

Column (a) - Enter the program titles identical to Column (a), Section A. A breakdown by function or activity is not necessary.

Column (b) - Enter the contribution to be made by the applicant.

Column (c) - Enter the amount of the State's cash and in-kind contribution if the applicant is not a State or State agency. Applicants which are a State or State agencies should leave this column blank.

Column (d) - Enter the amount of cash and in-kind contributions to be made from all other sources.

Column (e) - Enter totals of Columns (b), (c), and (d).

Line 12 - Enter the total for each of Columns (b)-(e). The amount in Column (e) should be equal to the amount on Line 5, Column (f), Section A.

Section D. Forecasted Cash Needs

Line 13 - Enter the amount of cash needed by quarter from the grantor agency during the first year.

Line 14 - Enter the amount of cash from all other sources needed by quarter during the first year.

Line 15 - Enter the totals of amounts on Lines 13 and 14.

Section E. Budget Estimates of Federal Funds Needed for Balance of the Project

Lines 16-19 - Enter in Column (a) the same grant program titles shown in Column (a), Section A. A breakdown by function or activity is not necessary. For new applications and continuation grant applications, enter in the proper columns amounts of Federal funds which will be needed to complete the program or project over the succeeding funding periods (usually in years). This section need not be completed for revisions (amendments, changes, or supplements) to funds for the current year of existing grants.

If more than four lines are needed to list the program titles, submit additional schedules as necessary.

Line 20 - Enter the total for each of the Columns (b)-(e). When additional schedules are prepared for this Section, annotate accordingly and show the overall totals on this line.

Section F. Other Budget Information

Line 21 - Use this space to explain amounts for individual direct object class cost categories that may appear to be out of the ordinary or to explain the details as required by the Federal grantor agency.

Line 22 - Enter the type of indirect rate (provisional, predetermined, final or fixed) that will be in effect during the funding period, the estimated amount of the base to which the rate is applied, and the total indirect expense.

Line 23 - Provide any other explanations or comments deemed necessary.

[FR Doc. 02–19857 Filed 8–5–02; 8:45 am]
BILLING CODE 4510–28–C

DEPARTMENT OF LABOR

Office of the Secretary

A Program To Improve Mine Safety in China

AGENCY: Bureau of International Labor Affairs, Department of Labor.

ACTION: Notice of Availability of Funds and Solicitation for Cooperative Agreement Applications (SGA 02–17).

This notice contains all of the necessary information and forms needed to apply for cooperative agreement funding.

SUMMARY: The U.S. Department of Labor (USDOL), Bureau of International Labor Affairs (ILAB), will award up to US$2.5 million through one or more cooperative agreements to an organization or organizations (''the applicant'') to develop and implement a program to improve mine safety in the People's Republic of China (''China''). USDOL is seeking applications from qualified applicants for the development of a strategy to improve mine safety, and for the implementation of such a program through collaboration with central and local government agencies, enterprises, and NGOs. Each applicant will submit one proposal for the entire program. USDOL, however, reserves the right to award more than one cooperative agreement for the implementation of distinct projects as part of the program.

DATES: The closing date for receipt of applications is September 4, 2002. As described in Section III.B and C, applications must be received by 4:45 p.m. (Eastern Daylight Savings Time) at the address below. No exceptions to the mailing, delivery, and hand-delivery conditions set forth in this notice will be granted. Applications that do not meet the conditions set forth in this notice will not be honored.

ADDRESSES: Application forms will not be mailed. They are published in this **Federal Register** Notice, and in the **Federal Register** which may be obtained from your nearest U.S. Government office, public library or on-line at *http://www.archives.gov/federal_register/index.* Applications must be delivered to: U.S. Department of Labor, Procurement Services Center, 200 Constitution Avenue, NW., Room N–5416, Attention: Lisa Harvey, Reference: SGA 02–17, Washington, DC 20210. Applications sent by e-mail, telegram, or facsimile (FAX) will not be accepted. Applications sent by other delivery services, such as Federal Express, UPS, etc., will be accepted; however, the applicant bears the responsibility for timely submission.

FOR FURTHER INFORMATION CONTACT: Lisa Harvey: e-mail address: *harvey-lisa@dol.gov.* All applicants are advised that U.S. mail delivery in the Washington, DC area has been slow and erratic due to the recent enhanced security measures. All applicants must take this into consideration when preparing to meet the application deadline. It is recommended that you confirm receipt of your application by contacting Lisa Harvey, U.S. Department of Labor, Procurement Services Center, telephone (202) 693–4570, prior to the closing deadline. All inquiries should reference SGA 02–17. See Section III.B for further information.

SUPPLEMENTARY INFORMATION: ILAB announces the availability of funds to be granted by cooperative agreement to one or more qualifying organization to achieve the following program objective: Improve work safety by reducing accidents and injuries in Chinese mines. The cooperative agreement(s) will be carried out through project(s) with China's national government in Beijing and through pilot projects in one or more mining areas provided that the selected mines are located within a reasonable distance from a U.S. Consulate General. (U.S. Consulate Generals are located in Shanghai, Guangzhou, Chengdu, and Shenyang.) In each location, the pilot project should focus on the above-mentioned objective. In choosing the location for pilot project(s), applicants are encouraged to engage financial and human resources in areas where the pilot project(s) is most likely to produce demonstrable results and success. It is neither necessary nor desirable to propose pilot projects in all mining areas in China, unless the applicant can demonstrate that there are adequate financial and human resources to ensure project success. In addition, any successful pilot project should address the specific challenges in each locality but should also be mindful of the needs of national policymakers in China. Each pilot project should be relevant to the local labor conditions and problems and should supplement the overall program objective. Finally, the designs of these pilot projects should reflect the understanding of and appropriate strategy to deal with China's current central-local relations, *i.e.*, proposals should be sensitive to the needs and conditions of municipal and provincial governments while also respecting national laws, procedures and policies.

Applicants are advised that ILAB is also currently soliciting grant applications under a separate SGA, SGA 02–18, to implement a program to enhance China's labor rule of law. The cooperative agreement(s) is to be actively managed by ILAB to assure the achievement of the stated objectives. Applicants are encouraged to be creative in proposing an innovative and cost-effective program that will have a demonstrable impact on achieving the overall objectives. Applicants are strongly encouraged to form partnerships with other national, international, or Chinese organizations to submit a joint proposal.

Limitation: Technical assistance under the proposed program may not be provided to the All-China Federation of Trade Unions. *See* 22 U.S.C. 6981(b)(3).

I. Background and Program Scope

A. Background: Mine Safety in China

In China, labor issues, including mine safety, are dealt with by several government agencies at the national, provincial, and municipal levels. At the national level, the State Administration for Work Safety (SAWS) is responsible for the development of policy and legislation on work safety and inspections.

The enforcement of mine safety law is carried out at the provincial and municipal level by the local bureaus of coal mine safety supervision, which report to the provincial government but take policy guidance from the SAWS. The local bureaus of work safety are under the jurisdictions of the provincial/municipal commissions on economics and trade but must uphold national laws and policies set by SAWS. Provincial and municipal governments also establish local regulations and policies for the implementation of national laws and policies.

China has one of the world's largest mining industries both in terms of number of workers and production. Chinese mines also have one of the highest fatality rates in the world. Coal mining is the most dangerous sector for workers in China and resulted in approximately 6,000 deaths in 2001.[1] Some sources claim an even higher fatality rate in the mining industry: Disaster Relief, an organization affiliated with the American Red Cross, reports that ''many disasters take place in illegally run mines * * * leaving some to believe that annual mining deaths in China exceed the 10,000 mark.''[2] The high rate and severity of coal mining accidents has highlighted serious labor law enforcement problems. Despite the

[1] U.S. Department of State, China: County Reports on Human Rights Practices, 2001, March 4, 2002.

[2] Disaster Relief, China's Coal Mines: A Working Graveyard. Post April 11, 2002, at *http://www.disasterrelief.org.*

recent government efforts to close tens of thousands of small coal mines with the worst safety problems, the enforcement of mine safety laws at the local level remains weak. The central government announced in 2001 tougher mine inspection and closure standards.[3]

China faces many challenges in improving mine safety. Recent discussions with officials of SAWS provide some insights into the actions required to improve conditions in the mines. First, China needs to improve its capacity to train mine rescue personnel. Chinese officials emphasized the need to establish a national safety training center for coal mines for this purpose. Second, the government needs to enhance its capacity to enforce mine safety laws and regulations at the local level. Finally, the government needs to educate workers and mine operators about workplace safety and safety management.

B. Program Scope

To be considered responsive to this solicitation, an applicant should propose projects that (1) work with the relevant government bodies to develop mine rescue techniques and institutionalize, with the appropriate government agencies, the systematic training of government and mine personnel in such techniques; (2) strengthen the capacity of government personnel to promote workplace safety and health in Chinese mines; (3) train miners and mine operators in mine safety methods and practices; (4) improve the enforcement of work safety laws and regulations, including the sharing of education and training material; and, (5) develop pilot projects with selected coal mines or other related enterprises in technical aspects of safety supervision.

II. Authority

ILAB is authorized to award and administer this program by the Departments of Labor, Health and Human Services, and Education and Related Agencies Appropriations Act, 2002, Pub.L. No. 107–116, 115 Stat. 2177 (2002).

III. Application Process

A. Eligible Applicants

Any commercial, international, or non-profit organization capable of successfully implementing a mine safety program in China, and successfully working with SAWS, local mine safety bureaus, Chinese mines, NGOs, and other appropriate agencies or organizations in China to meet the stated program objective is eligible to apply for this cooperative agreement(s). Joint applications, consisting of more than one organization are also eligible, and indeed are encouraged, although in such a case a lead organization must be identified. The capability of an applicant and collaborating organizations to perform necessary aspects of this solicitation will be determined under Section V.B Rating Criteria and Selection.

Please note that eligible cooperative agreement applicants must not be classified under the Internal Revenue Code as a Section 501(c)(4) entity. See 26 U.S.C. 501(c)(4). According to the Lobbying Disclosure Act of 1995 as amended, 2 U.S.C. 1611, an organization, as described in section 501(c)(4) of the Internal Revenue Code of 1986, that engages in lobbying activities will not be eligible for the receipt of federal funds constituting an award, grant, or loan.

B. Submission of Applications

One (1) ink-signed original, complete application plus two (2) copies must be submitted to the U.S. Department of Labor, Procurement Services Center, 200 Constitution Avenue, NW., Room N–5416, Washington, DC 20210, not later than 4:45 p.m. ESDT, September 4, 2002.

The application must consist of two (2) separate parts. Part I of the application must contain the Standard Form (SF) 424, ''Application for Federal Assistance'' (Appendix A) (The entry on SF 424 for the Catalog of Federal Domestic Assistance Number (CFDA) is 17.700) and sections A–F of the Budget Information Form SF 424A (Appendix B). Part II must contain a technical proposal that demonstrates capabilities in accordance with the Statement of Work (Section IV.A) and the selection criteria (Section V.B).

To be considered *responsive* to this solicitation, the application must consist of the above-mentioned separate sections not to exceed 30 single-sided (8½″ x 11″), double-spaced, 10 to 12 pitch typed pages. *Any applications that do not conform to these standards may be deemed non-responsive to this solicitation and may not be evaluated.* Standard forms and attachments are not included in the page limit. The application must include a table of contents and an abstract summarizing the application in not more than two (2) pages. These pages are also *not* included in the page limits.

Upon completion of negotiations, the individual signing the SF 424 on behalf of the applicant must be authorized to bind the applicant.

C. Acceptable Methods of Submission

The grant application package must be received at the designated place by the date and time specified or it will not be considered. Any application received at the Procurement Services Center after 4:45 p.m. EDST September 4, 2002, will not be considered unless it is received before the award is made and:

1. It was sent by registered or certified mail not later than the fifth calendar day before September 4, 2002;
2. It is determined by the Government that the late receipt was due solely to mishandling by the Government after receipt at the U.S. Department of Labor at the address indicated; or
3. It was sent by U.S. Postal Service Express Mail Next Day Service-Post Office to Addressee, not later than 5 p.m. at the place of mailing two (2) working days, excluding weekends and Federal holidays, prior to September 4, 2002.

The only acceptable evidence to establish the date of mailing of a late application sent by registered or certified mail is the U.S. Postal Service postmark on the envelope or wrapper and on the original receipt from the U.S. Postal Service. If the postmark is not legible, an application received after the above closing time and date shall be processed as if mailed late. ''Postmark'' means a printed, stamped or otherwise placed impression (not a postage meter machine impression) that is readily identifiable without further action as having been applied and affixed by an employee of the U.S. Postal Service on the date of mailing. Therefore applicants should request that the postal clerk place a legible hand cancellation ''bull's eye'' postmark on both the receipt and the envelope or wrapper.

The only acceptable evidence to establish the date of mailing of a late application sent by U.S. Postal Service Express Mail Next Day Service-Post Office to Addressee is the date entered by the Post Office receiving clerk on the ''Express Mail Next Day Service-Post Office to Addressee'' label and the postmark on the envelope or wrapper and on the original receipt from the U.S. Postal Service. ''Postmark'' has the same meaning as defined above. Therefore, applicants should request that the postal clerk place a legible hand cancellation ''bull's-eye'' postmark on both the receipt and the envelope or wrapper.

The only acceptable evidence to establish the time of receipt at the U.S. Department of Labor is the date/time stamp of the Procurement Services Center on the application wrapper or

[3] U.S. Department of State, China: Country Reports on Human Rights Practices, 2001, March 4, 2002.

other documentary evidence or receipt maintained by that office.

Applications sent by e-mail, telegram, or facsimile (FAX) will not be accepted. Applications sent by other delivery services, such as Federal Express, UPS, etc., will be accepted, however, the applicant bears the responsibility for timely submission. Because of delay in the receipt of mail in the Washington, DC area, it is recommended that you confirm receipt of your application by contacting Lisa Harvey, U.S. Department of Labor, Procurement Services Center, telephone (202) 693–4570 (this is not a toll-free number), prior to the closing deadline. All inquires should reference SGA 02–xx.

D. Funding Levels

Approximately US $2.5 million is budgeted to fund this program.

Although USDOL reserves the right to award more than one cooperative agreement, joint applicants consisting of more than one organization may apply to implement the program. Applicants will submit one application for the implementation of all projects (including pilot projects in localities) and are encouraged to utilize local organizations to implement portions of the program in order to institutionalize and sustain project improvements and reduce costs. The award of any sub-contract will be subject to USDOL approval. *See* Section IV.D Administrative Requirements.

E. Program Duration

The duration of the program is four (4) years. The start date of project activities will be negotiated upon the awarding of the cooperative agreement(s).

IV. Requirements

A. Statement of Work

In developing their proposals, applicants should develop a strategy for implementation of the project objective as stated in the section **SUPPLEMENTARY INFORMATION**. The strategy should take into account the implementing environment in China as well as that of the specific cities selected for pilot projects. The strategy should identify key mines and personnel for the program to successfully reduce mine accidents and improve the government's inspection and rescue functions (*see* Section I.B.).

The strategy should demonstrate how the applicant proposes to build upon the success of existing or past projects supported by other international donors, and coordinate activities among them at the local and national level. Further, the applicant should draft a strategy demonstrating how it will meet the project objectives by the end of the grant period, and how sustainability will be an integral element of the overall program.

The applicant must present a strategy to demonstrate that at least

- 50% of targeted mines improve work safety conditions for workers; and
- 80% of government inspectors of mine safety law demonstrate greater skill in carrying out their functions.

The applicant should include a basis on which the target groups will be established (*i.e.,* target mines or regions), outline the information, education, and communication (IEC) materials that will be used as well as a strategy for translating education and capacity building efforts into concrete and demonstrable results. In addition, the applicant should develop sustainable innovative strategies for involving government and employers organizations, and nongovernmental organizations, as appropriate, in the development, implementation and enforcement of appropriate workplace policies at the national and enterprise levels aimed at ensuring workers' and employers' rights under the law. The applicant awarded the cooperative agreement (''grantee'') will be required to work cooperatively with stakeholders in China, including but not limited to, MOLSS, SAWS, local bureaus of work safety, provincial and city governments, local mine bureaus, mines, NGOs, and other national or international organizations that work in similar areas. In addition, the grantee is expected to identify one or more key national or regional organizations that are capable of ensuring the sustainability of the program beyond the grant period.

B. Deliverables

Following the award of the cooperative agreement(s), unless otherwise indicated, the grantee must submit copies of all required reports to USDOL by the specified due dates. Other documents, such as project designs, are to be submitted by mutually agreed-upon deadlines.

1. Project Designs

The grantee(s) will travel to cities in China with USDOL officials on a project design mission trip, draft the design, and submit a project document in the format established by USDOL, to include a background/justification section, project strategy (objectives, outputs, activities, indicators), project implementation timetable, project management organizational chart, project budget, logical framework and performance monitoring plan to systematically monitor project results. The document will also include sections, which cover coordination strategies, project management, and sustainability of project improvements involving government, employers' and workers' organizations as well as other nongovernmental organizations as appropriate. The project design will be drawn, in part, from the proposal written in response to this solicitation.

2. Technical Progress Reports

The grantee(s) must furnish a typed technical report to USDOL on a quarterly basis, no later than 15 days from the last date of each quarter, *i.e.,* 31 March, 30 June, 30 September and 31 December of each year. The 30 June (2nd quarter) and 31 December (4th quarter) reports are abbreviated and need only indicate whether the work plan was fully implemented and if not, explain why not and attach the amended work plan. The grantee(s) must also furnish a separate financial report (SF 272) to USDOL on the same quarterly basis. The format for the technical progress report will be the standard format developed by USDOL and must contain the following information:

a. For each project objective, an accurate account of activities carried out under that objective during the reporting period as it relates to the work plan;

b. Major trends in the project that note particular success with a particular activity or trends that indicate a need to readjust or expand the work plan;

c. An account of problems, proposed solutions, actions taken or required regarding implementation of the project;

d. New proposals for activities, staffing, funding, etc.;

e. Lessons learned in project implementation;

f. Future actions planned in support of each project objective;

g. An accounting of staff and any sub-contractor hours expended;

h. Aggregate amount of costs incurred during the reporting period, including estimated expenditures vs. budget; and

i. An accounting of travel performed under the cooperative agreement during the reporting period, including purpose of trip, persons or organizations contacted, and benefits derived.

3. Annual Work Plan

An annual work plan for each project will be submitted within 45 days after the approval of the project design by USDOL. Subsequent annual work plans, when revised, will be delivered to reflect modifications in implementation,

no later than one year following submission of the previous work plan; or to reflect revisions based on recommendations made during mid-term evaluations, no later than 30 days following the mid-term evaluation.

4. Monitoring and Evaluation

A performance monitoring plan will be developed in collaboration with USDOL, including beginning and ending dates for projects, planned and actual dates for mid-term and final project evaluations, and will be included as part of the submission of the project document for USDOL approval. The plan will include performance indicators and instruments to collect and report on performance data on a semi-annual basis.

5. Evaluation Reports

The Grant Officer's Technical Representative (GOTR) will determine whether a mid-term evaluation will be conducted by an internal or external evaluation team. The final evaluation will be external in nature. In all cases, evaluations will be objective and carried out by independent evaluators. The grantee(s) must respond to any comments and recommendations resulting from the review of the mid-term report and will submit a work plan for implementing the recommendations of the mid-term report within 15 days following formal submission of the report to the grantee(s) by USDOL. Applicants need to allocate funds for these activities in the proposed budget.

C. Production of Deliverables

1. Materials Prepared and Purchased Under the Cooperative Agreement

The grantee(s) must submit to USDOL all media-related and educational materials developed by it or its sub-contractors under this cooperative agreement(s), including relevant press releases, for use in this project(s) before they are reproduced, published, or used. The grantee(s) must consult with USDOL to ensure that materials are compatible with USDOL materials relating to the program, *i.e.,* public relations material such as video and web site. USDOL considers brochures, pamphlets, videotapes, slide-tape shows, curricula, and any other training materials used in the program, educational materials. USDOL will review materials for technical accuracy. USDOL will also review training curricula and purchased training materials for accuracy before they are used. The grantee(s) must obtain prior approval from the Grant Officer for all materials developed or purchased under this cooperative agreement. All materials produced by grantee(s) must be provided to USDOL in a digital format for possible publication on the Internet by USDOL.

2. Acknowledgment of USDOL Funding

In all circumstances, the following must be displayed on printed materials:

Preparation of this item was funded by the United States Department of Labor under Cooperative Agreement No. [insert the appropriate cooperative agreement number].

When issuing statements, press releases, requests for proposals, bid solicitations, and other documents describing projects or programs funded in whole or in part with Federal money, all grantees receiving Federal funds, including State and local governments and recipients of research grants, must clearly state:

a. The percentage of the total costs of the program or project that will be financed with Federal money;

b. The dollar amount of Federal funds for the project or program; and

c. The percentage and dollar amount of the total costs of the project or program that will be financed by non-governmental sources.

In consultation with USDOL, USDOL's role will be acknowledged in one of the following ways:

a. The USDOL logo may be applied to USDOL-funded material prepared for world-wide distribution, including posters, videos, pamphlets, research documents, national survey results, impact evaluations, best practice reports, and other publications of global interest. The grantee(s) will consult with USDOL on whether the logo should be used on any such items prior to final draft or final preparation for distribution. In no event shall the USDOL logo be placed on any item until USDOL has given the grantee written permission to use the logo, after obtaining appropriate internal USDOL approval for use of the logo on the item.

b. If the USDOL determines the logo is not appropriate and does not give written permission, the following notice must appear on the document:

This document does not necessarily reflect the views or policies of the U.S. Department of Labor, nor does mention of trade names, commercial products, or organizations imply endorsement by the U.S. Government.

D. Administrative Requirements

1. General

Grantee organizations will be subject to applicable Federal laws (including provisions of appropriations law) and the applicable Office of Management and Budget (OMB) Circulars. Determinations of allowable costs will be made in accordance with the applicable Federal cost principles, *i.e.,* Non-Profit Organizations—OMB Circular A–122. The cooperative agreement(s) awarded under this SGA will be subject to the following administrative standards and provisions, if applicable:

29 CFR part 36—Federal Standards for Nondiscrimination on the Basis of Sex in Education Programs or Activities Receiving Federal Financial Assistance.

29 CFR part 93—New Restrictions on Lobbying.

29 CFR part 95—Uniform Administrative Requirements for Grants and Agreements with Institutions of Higher Education, Hospitals and Other Non-Profit Organizations, and with Commercial Organizations, Foreign Governments, Organizations Under the Jurisdiction of Foreign Governments and International Organizations.

29 CFR part 96—Federal Standards for Audit of Federally Funded Grants, Contracts and Agreements.

29 CFR part 98—Federal Standards for Government-wide Debarment and Suspension (Nonprocurement) and Government-wide Requirements for Drug-Free Workplace (Grants).

29 CFR part 99—Federal Standards for Audits of States, Local Governments, and Non-Profit Organizations.

2. Sub-Contracts

Sub-contracts must be awarded in accordance with 29 CFR 95.40–48. In compliance with Executive Orders 12876 as amended, 1323 0, 12928, and 13021 as amended, the grantee(s) is strongly encouraged to provide subcontracting opportunities to Historically Black Colleges and Universities, Hispanic-Serving Institutions and Tribal Colleges and Universities.

3. Key Personnel

The applicant must list the individual(s) who has been designated as having primary responsibility for the conduct and completion of all work in project(s) it proposes. The grantee(s) agrees to inform the GOTR whenever it appears impossible for one or more of these individual(s) to continue work on the project as planned. The grantee(s) may nominate substitute personnel for approval of the GOTR; however, the grantee(s) must obtain prior approval from the Grant Officer for all key personnel. If the Grant Officer determines not to approve the personnel change, he/she reserves the right to terminate the cooperative agreement.

4. Encumbrance of Cooperative Agreement Funds

Cooperative agreement funds may not be encumbered/obligated by the grantee(s) before or after the cooperative agreement period of performance. Encumbrances/obligations outstanding as of the end of the cooperative agreement period may be liquidated (paid out) after the end of the cooperative agreement period. Such encumbrances/obligations may involve only commitments for which a need existed during the cooperative agreement period and which are supported by approved contracts, purchase orders, requisitions, invoices, bills, or other evidence of liability consistent with the grantee(s)'s purchasing procedures and incurred within the cooperative agreement period. All encumbrances/obligations incurred during the cooperative agreement period must be liquidated within 90 days after the end of the cooperative agreement period, if practicable.

5. Site Visits

USDOL, through its authorized representatives, has the right, at all reasonable times, to make site visits to review project accomplishments and management control systems and to provide such technical assistance as may be required. If USDOL makes any site visit on the premises of the grantee(s) or a sub-contractor(s) under this cooperative agreement(s), the grantee(s) must provide and must require its sub-contractors to provide all reasonable facilities and assistance for the safety and convenience of the Government representatives in the performance of their duties. All site visits and evaluations must be performed in such a manner as will not unduly delay the work.

V. Review and Selection of Applications for Cooperative Agreement Award

A. The Review Process

USDOL will screen all applications to determine whether all required elements are present and clearly identifiable. A technical panel will objectively rate each complete application against the criteria described in this announcement. The panel recommendations to the Grant Officer are advisory in nature. The Grant Officer may elect to select one or more grantee on the basis of the initial proposal submission; or, the Grant Officer may establish a competitive or technically acceptable range for the purpose of selecting qualified applicants. If deemed appropriate, following the Grant Officer's call for the preparation and receipt of final revisions of proposals, the evaluation process described above will be repeated to consider such revisions. The Grant Officer will make a final selection determination based on what is most advantageous to the Government, considering factors such as panel findings, geographic presence of the applicants, the best value to the Government, cost and other factors. The Grant Officer's determination for award under this SGA is final.

Notice: Selection of an organization as a cooperative agreement recipient does not constitute approval of the cooperative agreement application as submitted. Before the actual cooperative agreement is awarded, the Grant Officer may enter into negotiations concerning such items as program components, funding levels, and administrative systems. If the negotiations do not result in an acceptable submission, the Grant Officer reserves the right to terminate the negotiation and decline to fund the application.

B. Rating Criteria and Selection

The technical panel will review grant applicants against the criteria listed below on the basis of 100 points.

The criteria are presented in the order of emphasis that they will receive.

1. Approach, Understanding of the Issue, and Program Plans (40 points)

a. *Overview.* This section of the proposal must explain the strategy employed by the applicant to achieve the following results:

(1) At least 50% of targeted mines have improved safety and health conditions for workers; and

(2) At least 80% of targeted government mine safety inspectors acquire increased skills to carry out their functions.

The applicant must propose a set of indicators to measure these stated program results and describe in detail the proposed approach to comply with each requirement in Section IV.A of this solicitation, including all tasks and methods to be utilized to implement the project. Also, the applicant must propose projects that would address issues discussed in Section I.A and B.

b. *Logical Framework.* The strategy should include an outline of the objectives, activities and indicators envisioned for implementation of the program.

c. *Implementation Plan.* The applicant must submit an implementation plan for the entire program, preferably with a visual such as a Gantt chart. The implementation plan should outline the approach that will be used to implement the program. The plan should list the activities envisioned for the life of the program as well as scheduling of activities by objective, starting with the execution of the cooperative agreement and ending with the final report. In describing the implementation plan, the applicant must address the following points:

(1) Describe the use of existing or potential infrastructure and use of qualified personnel, including qualified nationals, to implement the projects in Beijing as well as in selected pilot project cities. The applicant also must include a project organizational chart, demonstrating management structure, key personnel positions and indicating proposed links with the relevant government ministries, local government agencies/bureaus, NGOs, and other significant local actors.

(2) Develop a list of activities and explain how each relates to the overall development objective as stated in Section I.

(3) Explain how appropriate IEC materials and training curriculum will be developed.

(4) Explain the strategy for coordinating activities conducted at the central government level with those conducted at the local (provincial/city) level.

(5) Explain how the project(s) on mine safety will effectively engage government inspectors, mineworkers, and mine owners.

(6) Demonstrate how the program will strengthen national government's capacity and enhance policies to protect the rights of workers as prescribed by national law.

(7) Demonstrate how the grantee would systematically monitor and report on project performance to measure the achievement of the project objective(s).

(8) Demonstrate how the grantee would build national and local capacity to ensure that project efforts to increase mine safety would be sustained after completion of the project.

d. *Management and Staff Loading Plan.* The management plan must also include a management and staff loading plan. The management plan should include the following:

a. If two organizations are applying for the award in collaboration, they must demonstrate an approach to ensure successful collaboration including clear delineation of respective roles and responsibilities. The applicants must also identify the lead organization and submit the collaboration agreement.

b. A project organization chart and accompanying narrative which differentiates between elements of the applicant's staff and sub-contractors or consultants who will be retained;

(3) A description of the functional relationship between elements of the project's organization; and

(4) The identity of the individual(s) responsible for project management and the lines of authority between this/these individual(s) and other elements of the project.

The staff loading plan must identify all key tasks and the person-days required to complete each task. Labor estimates for each task must be broken down by individuals assigned to the task, including subcontractors and consultants. All key tasks must be charted to show time required to perform them by months or weeks.

2. Experience and Qualifications of the Applicant (25 points)

The evaluation criteria in this category are as follows:

a. The applicant organization and collaborating organizations applying for the award must demonstrate experience working on developmental projects in China or in countries with similar political, economic and social constraints.

b. The applicant must demonstrate prior experience of working directly with government ministries, local government organizations, employers, workers, NGOs and academic institutions, as well as with U.S. Missions, in the area of mine safety.

c. The applicant must also demonstrate that it can negotiate and implement developmental projects in China and that it has the appropriate international experience and expertise to carry out program responsibilities in China.

d. The applicant must demonstrate that it has staff or is able to recruit staff that can communicate effectively with Chinese miners, workers, migrant workers, and Chinese officials. Preference will be given to applicant organizations with staff that have Chinese language skills.

e. The proposal must include information regarding previous grants, contracts or cooperative agreements relevant to this solicitation. This information must include:

(1) The organization for whom the work was done;

(2) A contact person in that organization with his/her current phone number;

(3) The dollar value of the grant, contract or cooperative agreement for the project(s);

(4) The time frame and administrative and programmatic effort involved in the project(s);

(5) A brief summary of the work performed; and

(6) A brief summary of accomplishments.

This information on previous grants and contracts shall be provided in appendices and will *not* count toward the 30-page maximum page requirement.

3. Experience and Qualifications of Key Personnel (25 points)

This section of the application must include sufficient information for judging the quality and the competence of key staff proposed to be assigned to the project(s) proposed to assure that they meet the required qualifications. Successful performance of the proposed work depends heavily on the qualifications of the individuals committed to the project. Accordingly, in its evaluation of each application, USDOL will place emphasis on the applicant's commitment of key personnel qualified for the work involved in accomplishing the assigned tasks. Information provided on the experience and educational background of personnel must indicate the following:

(a) The identity of key personnel assigned to the project. ''Key personnel'' are staff who are essential to the successful operation of the project and completion of the proposed work and, therefore, may not be replaced or have their hours reduced without the approval of the Grant Officer.

(b) The educational background, Chinese language skills, and experience of key personnel.

(c) The special capabilities of key personnel that demonstrate prior experience in organizing, managing and performing similar efforts.

(d) The current employment status of key personnel and availability for this project. The applicant must also indicate whether the proposed work will be performed by persons currently employed or is dependent upon planned recruitment or sub-contracting.

Note that management and professional technical staff members comprising the applicant's proposed team should be individuals who have prior experience with organizations working in similar efforts, and are fully qualified to perform work specified in the Statement of Work. Where sub-contractors or outside assistance is proposed, organizational control should be clearly delineated to ensure responsiveness to the needs of USDOL. Key personnel must sign letters of agreement to serve on the project, and indicate availability to commence work within three weeks of grant award.

The following information must be furnished:

(a) The applicant must designate a Program Director and other key personnel to oversee the program. The Program Director must have a minimum of three years of professional experience in a leadership role in implementation of complex labor programs in developing countries. He or she must demonstrate sufficient knowledge of and understanding of China's political and economic development, its government, and the complexity of China's current state-local relations. Chinese language (Mandarin) proficiency is highly desirable.

(b) The applicant should specify other key personnel proposed to carry out the requirements of this solicitation.

(c) An organization chart showing the applicant's proposed organizational structure for performing task requirements for the project(s) proposed, along with a description of the roles and responsibilities of all key personnel proposed for this project(s). The chart should also differentiate between elements of the applicant's staff and sub-contractors or consultants who will be retained.

(d) Identify all key tasks and the person-days required to complete each task. Labor estimates for each task must be broken down by individuals assigned to the task, including sub-contractors and consultants. All key tasks must be charted to show time required to perform them by months or weeks.

(e) A resume for each of the key personnel to be assigned to the program. At a minimum, each resume must include: the individual's current employment status and previous work experience, including position title, duties performed, dates in position, employing organizations and educational background, including Chinese language skills (if any). Duties must be clearly defined in terms of role performed, i.e., manager, team leader, consultant, etc. (Resumes must be included as attachments, which do not count toward the page limitation.)

(f) The special capabilities of staff that demonstrate prior experience in organization, managing and performing similar efforts.

(g) The current employment status of key personnel proposed for work under the cooperative agreement, *i.e.*, whether personnel are currently employed by the organization or whether their employment depends upon planned recruitment or sub-contracting.

4. Budget Plan (10 points)

The applicant must develop one proposed budget for the implementation of the entire program, including pilot projects in localities. This section of the application must explain the costs for performing all of the requirements presented in this solicitation and for producing all required reports and other deliverables presented in this solicitation; costs must include labor, training, material production and dissemination, equipment, travel and other related costs. The budget plan will be evaluated solely for the purpose of determining the efficient and effective allocation of funding for proposed program implementation. Preference may be given to applicants with low administrative costs. Administrative costs shall be reflected separately on the budget plan from programmatic costs.

The budget must comply with Federal cost principles (which can be found in the applicable OMB Circulars) and with ILAB budget requirements contained in the application instructions in Section III of this solicitation.

This stated commitment will be incorporated into the text of the cooperative agreement with the selected applicant(s).

Signed in Washington, DC, on this 31 day of July, 2002.

Daniel P. Murphy,

Director, Procurement Services Center.

BILLING CODE 4510–28–P

APPLICATION FOR FEDERAL ASSISTANCE

OMB Approval No. 0348-0043

2. DATE SUBMITTED	Applicant Identifier	
3. DATE RECEIVED BY STATE	State Application Identifier	
4. DATE RECEIVED BY FEDERAL AGENCY	Federal Identifier	

1. TYPE OF SUBMISSION:

Application: ☐ Construction ☐ Non-Construction

Preapplication: ☐ Construction ☐ Non-Construction

5. APPLICANT INFORMATION

Legal Name:

Organizational Unit:

Address *(give city, county, State, and zip code)*:

Name and telephone number of person to be contacted on matters involving this application *(give area code)*

6. EMPLOYER IDENTIFICATION NUMBER *(EIN)*:

☐☐ — ☐☐☐☐☐☐☐

7. TYPE OF APPLICANT: *(enter appropriate letter in box)* ☐

A. State
B. County
C. Municipal
D. Township
E. Interstate
F. Intermunicipal
G. Special District
H. Independent School Dist.
I. State Controlled Institution of Higher Learning
J. Private University
K. Indian Tribe
L. Individual
M. Profit Organization
N. Other (Specify) _____

8. TYPE OF APPLICATION:

☐ New ☐ Continuation ☐ Revision

If Revision, enter appropriate letter(s) in box(es) ☐ ☐

A. Increase Award B. Decrease Award C. Increase Duration
D. Decrease Duration Other*(specify)*:

_____

9. NAME OF FEDERAL AGENCY:

10. CATALOG OF FEDERAL DOMESTIC ASSISTANCE NUMBER:

☐☐ — ☐☐☐

TITLE:

11. DESCRIPTIVE TITLE OF APPLICANT'S PROJECT:

12. AREAS AFFECTED BY PROJECT *(Cities, Counties, States, etc.)*:

13. PROPOSED PROJECT

Start Date	Ending Date

14. CONGRESSIONAL DISTRICTS OF:

a. Applicant

b. Project

15. ESTIMATED FUNDING:

a. Federal	$ .00
b. Applicant	$ .00
c. State	$ .00
d. Local	$ .00
e. Other	$ .00
f. Program Income	$ .00
g. TOTAL	$ 0.00

16. IS APPLICATION SUBJECT TO REVIEW BY STATE EXECUTIVE ORDER 12372 PROCESS?

a. YES. THIS PREAPPLICATION/APPLICATION WAS MADE AVAILABLE TO THE STATE EXECUTIVE ORDER 12372 PROCESS FOR REVIEW ON:

DATE _____

b. No. ☐ PROGRAM IS NOT COVERED BY E. O. 12372
☐ OR PROGRAM HAS NOT BEEN SELECTED BY STATE FOR REVIEW

17. IS THE APPLICANT DELINQUENT ON ANY FEDERAL DEBT?

☐ Yes If "Yes," attach an explanation. ☐ No

18. TO THE BEST OF MY KNOWLEDGE AND BELIEF, ALL DATA IN THIS APPLICATION/PREAPPLICATION ARE TRUE AND CORRECT, THE DOCUMENT HAS BEEN DULY AUTHORIZED BY THE GOVERNING BODY OF THE APPLICANT AND THE APPLICANT WILL COMPLY WITH THE ATTACHED ASSURANCES IF THE ASSISTANCE IS AWARDED.

a. Type Name of Authorized Representative	b. Title	c. Telephone Number
d. Signature of Authorized Representative		e. Date Signed

Previous Edition Usable
Authorized for Local Reproduction

Standard Form 424 (Rev. 7-97)
Prescribed by OMB Circular A-102

INSTRUCTIONS FOR THE SF-424

Public reporting burden for this collection of information is estimated to average 45 minutes per response, including time for reviewing instructions, searching existing data sources, gathering and maintaining the data needed, and completing and reviewing the collection of information. Send comments regarding the burden estimate or any other aspect of this collection of information, including suggestions for reducing this burden, to the Office of Management and Budget, Paperwork Reduction Project (0348-0043), Washington, DC 20503.

PLEASE DO NOT RETURN YOUR COMPLETED FORM TO THE OFFICE OF MANAGEMENT AND BUDGET. SEND IT TO THE ADDRESS PROVIDED BY THE SPONSORING AGENCY.

This is a standard form used by applicants as a required facesheet for preapplications and applications submitted for Federal assistance. It will be used by Federal agencies to obtain applicant certification that States which have established a review and comment procedure in response to Executive Order 12372 and have selected the program to be included in their process, have been given an opportunity to review the applicant's submission.

Item:	Entry:
1.	Self-explanatory.
2.	Date application submitted to Federal agency (or State if applicable) and applicant's control number (if applicable).
3.	State use only (if applicable).
4.	If this application is to continue or revise an existing award, enter present Federal identifier number. If for a new project, leave blank.
5.	Legal name of applicant, name of primary organizational unit which will undertake the assistance activity, complete address of the applicant, and name and telephone number of the person to contact on matters related to this application.
6.	Enter Employer Identification Number (EIN) as assigned by the Internal Revenue Service.
7.	Enter the appropriate letter in the space provided.
8.	Check appropriate box and enter appropriate letter(s) in the space(s) provided: -- "New" means a new assistance award. -- "Continuation" means an extension for an additional funding/budget period for a project with a projected completion date. -- "Revision" means any change in the Federal Government's financial obligation or contingent liability from an existing obligation.
9.	Name of Federal agency from which assistance is being requested with this application.
10.	Use the Catalog of Federal Domestic Assistance number and title of the program under which assistance is requested.
11.	Enter a brief descriptive title of the project. If more than one program is involved, you should append an explanation on a separate sheet. If appropriate (e.g., construction or real property projects), attach a map showing project location. For preapplications, use a separate sheet to provide a summary description of this project.

Item:	Entry:
12.	List only the largest political entities affected (e.g., State, counties, cities).
13.	Self-explanatory.
14.	List the applicant's Congressional District and any District(s) affected by the program or project.
15.	Amount requested or to be contributed during the first funding/budget period by each contributor. Value of in-kind contributions should be included on appropriate lines as applicable. If the action will result in a dollar change to an existing award, indicate *only* the amount of the change. For decreases, enclose the amounts in parentheses. If both basic and supplemental amounts are included, show breakdown on an attached sheet. For multiple program funding, use totals and show breakdown using same categories as item 15.
16.	Applicants should contact the State Single Point of Contact (SPOC) for Federal Executive Order 12372 to determine whether the application is subject to the State intergovernmental review process.
17.	This question applies to the applicant organization, not the person who signs as the authorized representative. Categories of debt include delinquent audit disallowances, loans and taxes.
18.	To be signed by the authorized representative of the applicant. A copy of the governing body's authorization for you to sign this application as official representative must be on file in the applicant's office. (Certain Federal agencies may require that this authorization be submitted as part of the application.)

SF-424 (Rev. 7-97) Back

BUDGET INFORMATION - Non-Construction Programs

OMB Approval No. 0348-0044

SECTION A - BUDGET SUMMARY

Grant Program Function or Activity (a)	Catalog of Federal Domestic Assistance Number (b)	Estimated Unobligated Funds		New or Revised Budget		
		Federal (c)	Non-Federal (d)	Federal (e)	Non-Federal (f)	Total (g)
1.		$	$	$	$	$ 0.00
2.						0.00
3.						0.00
4.						0.00
5. Totals		$ 0.00	$ 0.00	$ 0.00	$ 0.00	$ 0.00

SECTION B - BUDGET CATEGORIES

6. Object Class Categories	GRANT PROGRAM, FUNCTION OR ACTIVITY				Total
	(1)	(2)	(3)	(4)	(5)
a. Personnel	$	$	$	$	$ 0.00
b. Fringe Benefits					0.00
c. Travel					0.00
d. Equipment					0.00
e. Supplies					0.00
f. Contractual					0.00
g. Construction					0.00
h. Other					0.00
i. Total Direct Charges *(sum of 6a-6h)*	0.00	0.00	0.00	0.00	0.00
j. Indirect Charges					0.00
k. TOTALS *(sum of 6i and 6j)*	$ 0.00	$ 0.00	$ 0.00	$ 0.00	$ 0.00
7. Program Income	$	$	$	$	$ 0.00

Authorized for Local Reproduction

Standard Form 424A (Rev. 7-97)
Prescribed by OMB Circular A-102

Previous Edition Usable

SECTION C - NON-FEDERAL RESOURCES				
(a) Grant Program	(b) Applicant	(c) State	(d) Other Sources	(e) TOTALS
8.	$	$	$	$ 0.00
9.				0.00
10.				0.00
11.				0.00
12. TOTAL *(sum of lines 8-11)*	$ 0.00	$ 0.00	$ 0.00	$ 0.00

SECTION D - FORECASTED CASH NEEDS					
	Total for 1st Year	1st Quarter	2nd Quarter	3rd Quarter	4th Quarter
13. Federal	$ 0.00	$	$	$	$
14. Non-Federal	0.00				
15. TOTAL *(sum of lines 13 and 14)*	$ 0.00	$ 0.00	$ 0.00	$ 0.00	$ 0.00

SECTION E - BUDGET ESTIMATES OF FEDERAL FUNDS NEEDED FOR BALANCE OF THE PROJECT				
(a) Grant Program	FUTURE FUNDING PERIODS (Years)			
	(b) First	(c) Second	(d) Third	(e) Fourth
16.	$	$	$	$
17.				
18.				
19.				
20. TOTAL *(sum of lines 16-19)*	$ 0.00	$ 0.00	$ 0.00	$ 0.00

SECTION F - OTHER BUDGET INFORMATION	
21. Direct Charges:	22. Indirect Charges:
23. Remarks:	

Authorized for Local Reproduction

Standard Form 424A (Rev. 7-97) Page 2

INSTRUCTIONS FOR THE SF-424A

Public reporting burden for this collection of information is estimated to average 180 minutes per response, including time for reviewing instructions, searching existing data sources, gathering and maintaining the data needed, and completing and reviewing the collection of information. Send comments regarding the burden estimate or any other aspect of this collection of information, including suggestions for reducing this burden, to the Office of Management and Budget, Paperwork Reduction Project (0348-0044), Washington, DC 20503.

PLEASE DO NOT RETURN YOUR COMPLETED FORM TO THE OFFICE OF MANAGEMENT AND BUDGET. SEND IT TO THE ADDRESS PROVIDED BY THE SPONSORING AGENCY.

General Instructions

This form is designed so that application can be made for funds from one or more grant programs. In preparing the budget, adhere to any existing Federal grantor agency guidelines which prescribe how and whether budgeted amounts should be separately shown for different functions or activities within the program. For some programs, grantor agencies may require budgets to be separately shown by function or activity. For other programs, grantor agencies may require a breakdown by function or activity. Sections A, B, C, and D should include budget estimates for the whole project except when applying for assistance which requires Federal authorization in annual or other funding period increments. In the latter case, Sections A, B, C, and D should provide the budget for the first budget period (usually a year) and Section E should present the need for Federal assistance in the subsequent budget periods. All applications should contain a breakdown by the object class categories shown in Lines a-k of Section B.

Section A. Budget Summary Lines 1-4 Columns (a) and (b)

For applications pertaining to a *single* Federal grant program (Federal Domestic Assistance Catalog number) and *not requiring* a functional or activity breakdown, enter on Line 1 under Column (a) the Catalog program title and the Catalog number in Column (b).

For applications pertaining to a *single* program *requiring* budget amounts by multiple functions or activities, enter the name of each activity or function on each line in Column (a), and enter the Catalog number in Column (b). For applications pertaining to multiple programs where none of the programs require a breakdown by function or activity, enter the Catalog program title on each line in *Column* (a) and the respective Catalog number on each line in Column (b).

For applications pertaining to *multiple* programs where one or more programs *require* a breakdown by function or activity, prepare a separate sheet for each program requiring the breakdown. Additional sheets should be used when one form does not provide adequate space for all breakdown of data required. However, when more than one sheet is used, the first page should provide the summary totals by programs.

Lines 1-4, Columns (c) through (g)

For new applications, leave Column (c) and (d) blank. For each line entry in Columns (a) and (b), enter in Columns (e), (f), and (g) the appropriate amounts of funds needed to support the project for the first funding period (usually a year).

For continuing grant program applications, submit these forms before the end of each funding period as required by the grantor agency. Enter in Columns (c) and (d) the estimated amounts of funds which will remain unobligated at the end of the grant funding period only if the Federal grantor agency instructions provide for this. Otherwise, leave these columns blank. Enter in columns (e) and (f) the amounts of funds needed for the upcoming period. The amount(s) in Column (g) should be the sum of amounts in Columns (e) and (f).

For supplemental grants and changes to existing grants, do not use Columns (c) and (d). Enter in Column (e) the amount of the increase or decrease of Federal funds and enter in Column (f) the amount of the increase or decrease of non-Federal funds. In Column (g) enter the new total budgeted amount (Federal and non-Federal) which includes the total previous authorized budgeted amounts plus or minus, as appropriate, the amounts shown in Columns (e) and (f). The amount(s) in Column (g) should not equal the sum of amounts in Columns (e) and (f).

Line 5 - Show the totals for all columns used.

Section B Budget Categories

In the column headings (1) through (4), enter the titles of the same programs, functions, and activities shown on Lines 1-4, Column (a), Section A. When additional sheets are prepared for Section A, provide similar column headings on each sheet. For each program, function or activity, fill in the total requirements for funds (both Federal and non-Federal) by object class categories.

Line 6a-i - Show the totals of Lines 6a to 6h in each column.

Line 6j - Show the amount of indirect cost.

Line 6k - Enter the total of amounts on Lines 6i and 6j. For all applications for new grants and continuation grants the total amount in column (5), Line 6k, should be the same as the total amount shown in Section A, Column (g), Line 5. For supplemental grants and changes to grants, the total amount of the increase or decrease as shown in Columns (1)-(4), Line 6k should be the same as the sum of the amounts in Section A, Columns (e) and (f) on Line 5.

Line 7 - Enter the estimated amount of income, if any, expected to be generated from this project. Do not add or subtract this amount from the total project amount, Show under the program

INSTRUCTIONS FOR THE SF-424A (continued)

narrative statement the nature and source of income. The estimated amount of program income may be considered by the Federal grantor agency in determining the total amount of the grant.

Section C. Non-Federal Resources

Lines 8-11 Enter amounts of non-Federal resources that will be used on the grant. If in-kind contributions are included, provide a brief explanation on a separate sheet.

Column (a) - Enter the program titles identical to Column (a), Section A. A breakdown by function or activity is not necessary.

Column (b) - Enter the contribution to be made by the applicant.

Column (c) - Enter the amount of the State's cash and in-kind contribution if the applicant is not a State or State agency. Applicants which are a State or State agencies should leave this column blank.

Column (d) - Enter the amount of cash and in-kind contributions to be made from all other sources.

Column (e) - Enter totals of Columns (b), (c), and (d).

Line 12 - Enter the total for each of Columns (b)-(e). The amount in Column (e) should be equal to the amount on Line 5, Column (f), Section A.

Section D. Forecasted Cash Needs

Line 13 - Enter the amount of cash needed by quarter from the grantor agency during the first year.

Line 14 - Enter the amount of cash from all other sources needed by quarter during the first year.

Line 15 - Enter the totals of amounts on Lines 13 and 14.

Section E. Budget Estimates of Federal Funds Needed for Balance of the Project

Lines 16-19 - Enter in Column (a) the same grant program titles shown in Column (a), Section A. A breakdown by function or activity is not necessary. For new applications and continuation grant applications, enter in the proper columns amounts of Federal funds which will be needed to complete the program or project over the succeeding funding periods (usually in years). This section need not be completed for revisions (amendments, changes, or supplements) to funds for the current year of existing grants.

If more than four lines are needed to list the program titles, submit additional schedules as necessary.

Line 20 - Enter the total for each of the Columns (b)-(e). When additional schedules are prepared for this Section, annotate accordingly and show the overall totals on this line.

Section F. Other Budget Information

Line 21 - Use this space to explain amounts for individual direct object class cost categories that may appear to be out of the ordinary or to explain the details as required by the Federal grantor agency.

Line 22 - Enter the type of indirect rate (provisional, predetermined, final or fixed) that will be in effect during the funding period, the estimated amount of the base to which the rate is applied, and the total indirect expense.

Line 23 - Provide any other explanations or comments deemed necessary.

[FR Doc. 02–19858 Filed 8–5–02; 8:45 am]
BILLING CODE 4510–28–C

DEPARTMENT OF LABOR

Office of the Secretary

Expanding Economic Opportunity and Income Security Through Workforce Education, Skills Training, Employment Creation, and Local Economic Development

AGENCY: Bureau of International Labor Affairs, Department of Labor.

ACTION: Notice of Availability of Funds and Solicitation for Cooperative Agreement Applications (SGA 02–19).

This notice contains all of the necessary information and forms needed to apply for cooperative agreement funding.

SUMMARY: The U.S. Department of Labor (USDOL), Bureau of International Labor Affairs (ILAB), will award up to US $4 million through one or more cooperative agreement to an organization or organizations to develop and implement a project to expand economic opportunity and improve income security for targeted populations of current workers and workforce entrants in the Philippines and Pakistan. USDOL is seeking applicants from qualified organizations for the implementation of workforce education, skills training, employment creation, and local economic development that will lead directly to new or improved employment and income opportunities for current or future workers. Applicants will submit one application with separate proposals for each country and include outreach to one or more targeted populations including women, disenfranchised young adults, religious and ethnic minorities, people with disabilities, and rural or economically disadvantaged communities.

DATES: The closing date for receipt of applications is Wednesday, September 4, 2002. Applications must be received by 4:45 p.m. (Eastern Daylight Savings Time) at the address below. No exceptions to the mailing, delivery, and hand-delivery conditions set forth in this notice will be granted.

ADDRESSES: Application forms will not be mailed. They are published in this **Federal Register** Notice, and in the **Federal Register** which may be obtained from your nearest U.S. Government office, public library, or on-line at *http://www.archives.gov/federal_register/index.html.* Applications must be delivered to: U.S. Department of Labor, Procurement Services Center, 200 Constitution Avenue, NW, Room N–5416, Attention: Lisa Harvey, Reference: SGA 02–19, Washington, DC 20210. Applications sent by e-mail, telegram, or facsimile (FAX) will not be accepted. Applications sent by other delivery services, such as Federal Express, UPS, etc., will be accepted, however, the applicant bears the responsibility for timely submission.

FOR FURTHER INFORMATION CONTACT: Lisa Harvey: E-mail address: *harvey-lisa@dol.gov.* All applicants are advised that U.S. mail delivery in the Washington, DC area has been slow and erratic due to the recent concerns involving anthrax contamination. All applicants must take this into consideration when preparing to meet the application deadline. It is recommended that you confirm receipt of your application by contacting Lisa Harvey, U.S. Department of Labor, Procurement Services Center, telephone (202) 693–4570 (this is not a toll-free number) prior to the closing deadline. All inquiries should reference SGA 02–19. See Section III.B for further information.

SUPPLEMENTARY INFORMATION: ILAB's Office of Foreign Relations (OFR) carries out a worldwide international technical assistance program in support of three objectives: (1) Expanding Economic Opportunity and Income Security for Workers; (2) Protecting the Basic Rights of Workers; and (3) Reducing the Prevalence of HIV/AIDS through Workplace Education. As a means to develop and implement projects to expand economic opportunity and income security for workers, ILAB announces the availability of funds to be granted by cooperative agreement to one or more qualifying organizations to achieve the USDOL program objectives to implement a program of workforce education (possibly including literacy), skills training, employment creation (possibly including self-employment opportunities), and local economic development in Pakistan and the Philippines. These objectives are part of a broader USDOL program to address social safety net needs. The process of globalization and economic liberalization have often led to high expectations of the population to foster social progress after achieving a more stable and solid economy and democratic government. National, regional, and local social safety nets are viewed as an important element in efforts to garner support for economic reform and trade liberalization as they provide a modicum of security in a highly dynamic labor market. The cooperative agreement(s) will focus on providing skills training to one or more targeted populations including women, disenfranchised young adults, religious and ethnic minorities, people with disabilities, and rural or economically disadvantaged communities that are directly linked to real jobs and increased earned income. Program elements may also include the provision of training in self-employment and business development, community-based local economic development, and job-related tools and equipment to individual participants or service providers as needed to ensure the success of the program.

The cooperative agreement(s) will be actively managed by ILAB to assure achievement of the stated objectives. Applicants are encouraged to be creative in proposing innovative and cost-effective interventions that will have a demonstrable impact on unemployment rates and earnings for project participants and their communities.

I. Background and Program Scope

A. Problem Identification: Islamic Republic of Pakistan

The country is divided into four provinces (Balochistan, North-West Frontier, Punjab, and Sindh), one territory (Federally Administered Tribal Areas), and one capitol territory (Islamabad Capitol Territory). Although the military is the primary political force, the religious clergy, landowners, industrialists, and small business owners have significant influence over domestic and international politics.

Pakistan has a total population estimated at 140 million and a national literacy rate of 33% (55.3% for males and 29% for females). There is no national law mandating compulsory education nor are sufficient public resources dedicated to education. As a result many children reach legal working age without basic education, literacy, or workforce preparedness skills.

Nearly 56% of the population is of working age but the actual labor force is only 40 million (44% in agriculture, 39% in services, and 17% in industry). There is also extensive export of labor, primarily to the Middle East. The official unemployment rate is 6% although it is generally agreed that real unemployment is much higher, especially for youth, women, and ethnic minorities.

Although 97% of the population is Muslim, there is ethnic tension between the Sunnis, who comprise 77% of the total Muslim population, and the Shi'as, who are 20% of the total Muslim population. There is reportedly frequent discrimination in both public and private sector employment and education for all religious minorities but primarily Christians. Despite a legal

requirement that employers either hire qualified persons with disabilities for at least 2% of their positions or pay a fee to a government fund for persons with disabilities, this is rarely enforced.

Women, particularly in the rural areas where female literacy rates are 2% or less, are also subject to discrimination in education and employment opportunities. The National Institute of Psychology conducted a survey in the rural areas and reported that 42% of parents cited ''no financial benefit'' as the reason they did not send their daughters for formal education. Other surveys have found that girls are also not sent to school so that they can assist with household duties. Discrimination in college acceptance rates of qualified applicants between boys (83%) and girls (28%) further discourages investment in girls' education.

Forty percent (40%) of the population lives below the poverty line and foreign investment is limited. Per capita GDP is estimated at about US$441 and is tied closely to agricultural yields that are adversely affected due to current and persistent drought conditions. Pakistan's largest exports are textiles (garments, cotton cloth, and yarn), rice, and other agricultural products. The U.S. is the largest recipient of exported goods, receiving nearly one quarter of Pakistan's exports.

B. Problem Identification: Republic of the Philippines

The Philippines has a total population of nearly 83 million of which 48.1 million are in the labor force, primarily in agriculture, government, and services, and to a lesser extent in assembly manufacturing. Primary education is compulsory and the national literacy rate is 94.6%, 95% for males and 94.3% for females. Secondary school dropout rates are high, however, with a total graduation rate of 50%; among the poor the rate is even lower due to the cost of school uniforms, supplies, and transportation.

Forty one percent (41%) of the population lives below the poverty line with higher rates among Muslims and those living in rural areas. The economy has had a difficult time recovering from the Asian financial crisis of the late 1990s and the country's political instability since the overthrow of the Marcos regime. Exports, reaching US$38 billion in 2000, are concentrated in electronic equipment, machinery, garments, and coconut products.

Employment opportunities for youth, women, people with disabilities, rural residents, indigenous people, and Muslims (primarily those residing in the Autonomous Region of Muslim Mindinao) are especially limited. With regard to the latter, religious leaders from both the Muslim and the Christian communities contend that the economic disparities are the basis for the violence and armed aggression, not religious intolerance. Workplace sexual harassment, particularly in the special economic zones, is thought to be significant although underreported due to fear of job loss in retaliation. In addition, women are traditionally hired under short term and part time work contracts. Although there are legal protections against these forms of discrimination, they are not enforced.

C. Program Scope

Given the magnitude of the need for skills training and the size of the potential beneficiary population, applicants are encouraged to focus their responses in ways that target a specific community or target population, support U.S. foreign policy objectives within the country, and leverage other donor-funded or host government activities. Furthermore, applicants should emphasize the interconnectedness of the proposed training with real employment opportunities and benefits to a broader community.

Applicants may wish to consider the following programs as illustrative examples of the types of projects that might be considered for USDOL funding. In the Philippines, with the support of an international NGO, young adults are trained in the repair and maintenance of hospital equipment. Subsequent to the receipt of the training, graduates are provided with a personal set of the hardware needed to perform the job and are linked to hospitals willing to hire them. This program also has the developmental benefit of improving healthcare services for disadvantaged populations. In Pakistan, the government has developed a partnership with the Chambers of Commerce to increase the involvement of the private sector in the identification of skills needed for employment and the successful transfer of those skills by the public sector education system.

II. Authority

ILAB is authorized to award and administer this program by the Departments of Labor, Health and Human Services, and Education, and Related Agencies Appropriations Act, 2002, Pub. L. No.107–116, 115 Stat. 2177 (2002).

III. Application Process

A. Eligible Applicants

Any commercial, international, or not-for-profit organization capable of successfully implementing workforce education and skill training (including literacy), employment creation, and local economic development, and working with foreign national government ministries, regional and local government entities, employers, non-governmental and community-based organizations, and labor groups to improve workforce preparedness skills (possibly including literacy education), employment creation (possibly including self-employment opportunities), and local economic development is eligible for this cooperative agreement(s). Government ministries likely to be involved include those for labor, education, social affairs, commerce, finance, and those for special targeted populations such as youth, women, or minorities. Partnerships of more than one organization are also eligible although in such a case a lead organization must be identified. The capability of an applicant, partners, and co-applicants to perform necessary aspects of this solicitation will be determined under Section V.B Rating Criteria.

Please note that eligible cooperative agreement applicants must not be classified under the Internal Revenue Code as a section 501(c)(4) entity. *See* 26 U.S.C. 501(c)(4). According to the Lobbying Disclosure Act of 1995, as amended, 2 U.S.C. 1611, an organization, as described in section 501(c)(4) of the Internal Revenue Code of 1986, that engages in lobbying activities will not be eligible for the receipt of federal funds constituting an award, grant, or loan.

B. Submission of Applications

One (1) ink-signed original, complete application plus two (2) copies of the proposal must be submitted to the U.S. Department of Labor, Procurement Services Center, 200 Constitution Avenue, NW, Room N–5416, Washington, DC 20210, not later than 4:45 p.m. EDST, September 4, 2002.

The application must consist of two (2) separate parts. Part I of the application must contain the Standard Form (SF) 424, ''Application for Federal Assistance'' (Appendix A) (The entry on SF 424 for the Catalog of Federal Domestic Assistance Number (CFDA) is 17.700) and sections A–F of the Budget Information Form SF 424A (Appendix B). Part II must contain a technical proposal that demonstrates capabilities in accordance with the Statement of

Work (Section IV.A) and the selection criteria (Section V.B).

To be considered *responsive* to this solicitation, the application must consist of the above-mentioned separate sections not to exceed 60 single-sided (8½″ x 11″), double-spaced, 10 to 12 pitch typed pages for which a response is submitted. *Any applications that do not conform to these standards may be deemed non-responsive to this solicitation and may not be evaluated.*

Standard forms and attachments are not included in the page limit. The application must include a table of contents and an abstract summarizing the application in not more than two (2) pages. These pages are also *not* included in the page limits.

Upon completion of negotiations, the individual signing the SF 424 on behalf of the applicant must be authorized to bind the applicant.

C. Acceptable Methods of Submission

The grant application package must be received at the designated place by the date and time specified or it will not be considered. Any application received at the Office of Procurement Services after 4:45 pm EDST on September 4, 2002 will not be considered unless it is received before the award is made and:

1. It was sent by registered or certified mail not later than the fifth calendar day before August 6, 2002;

2. It is determined by the Government that the late receipt was due solely to mishandling by the Government after receipt at the U.S. Department of Labor at the address indicated; or

3. It was sent by U.S. Postal Service Express Mail Next Day Service-Post Office to Addressee, not later than 5 pm at the place of mailing two (2) working days, excluding weekends and Federal holidays, prior to August 6, 2002.

The only acceptable evidence to establish the date of mailing of a late application sent by registered or certified mail is the U.S. Postal Service postmark on the envelope or wrapper and on the original receipt from the U.S. Postal Service. If the postmark is not legible, an application received after the above closing time and date shall be processed as if mailed late. ''Postmark'' means a printed, stamped or otherwise placed impression (not a postage meter machine impression) that is readily identifiable without further action as having been applied and affixed by an employee of the U.S. Postal Service on the date of mailing. Therefore applicants should request that the postal clerk place a legible hand cancellation ''bull's eye'' postmark on both the receipt and the envelope or wrapper.

The only acceptable evidence to establish the date of mailing of a late application sent by U.S. Postal Service Express Mail Next Day Service-Post Office to Addressee is the date entered by the Post Office receiving clerk on the ''Express Mail Next Day Service-Post Office to Addressee'' label and the postmark on the envelope or wrapper and on the original receipt from the U.S. Postal Service. ''Postmark'' has the same meaning as defined above. Therefore, applicants should request that the postal clerk place a legible hand cancellation ''bull's-eye'' postmark on both the receipt and the envelope or wrapper.

The only acceptable evidence to establish the time of receipt at the U.S. Department of Labor is the date/time stamp of the Procurement Services Center on the application wrapper or other documentary evidence or receipt maintained by that office.

Applications sent by e-mail, telegram, or facsimile (FAX) will not be accepted. Applications sent by other delivery services, such as Federal Express, UPS, etc., will be accepted, however, the applicant bears the responsibility for timely submission. Because of delay in the receipt of mail in the Washington, DC area, it is recommended that you confirm receipt of your application by contacting Lisa Harvey, U.S. Department of Labor, Procurement Services Center, telephone (202) 693–4570 (this is not a toll-free number), prior to the closing deadline. All inquires should reference SGA 02–19.

D. Funding Levels

Approximately US $4 million is budgeted for this project to fund activities in Pakistan and the Philippines. Although USDOL reserves the right to award more than one cooperative agreement, a partnership of more than one organization may apply to implement the project. Applicants will submit one application with separate proposals for each country, for the implementation of projects in both countries and are encouraged to utilize locally-based entities and personnel to implement much of the project in order to institutionalize and sustain project improvements and reduce costs. The award of any sub-contract will be subject to USDOL approval (Section IV.D).

E. Program Duration

The duration of the project funded by this SGA is three (3) years. The start date of project activities will be negotiated upon the awarding of the cooperative agreement(s).

IV. Requirements

A. Statement of Work

In developing their proposals, applicants should develop a strategy for the implementation of the project that will achieve the stated objectives to expand economic opportunity and income security through workforce education, skills training, employment creation, and local economic development for one or more targeted populations including women, disenfranchised young adults, religious and ethnic minorities, people with disabilities, and rural or economically disadvantaged communities.

The strategy should take into account the implementing environment in Pakistan and the Philippines and incorporate innovative methodologies for identifying participants, selecting project partners, engaging local employers and education and training service providers, and, if possible, leveraging other investments or activities. The strategy should also demonstrate how the applicant proposes to involve employer, labor, non-governmental and community-based organizations and local, regional, and national government officials in the implementation of the project. The applicant should draft a strategy demonstrating how it will meet the project objectives by the end of the grant period and how the issue of sustainability will be integral to project implementation. The applicant should present a strategy that also includes indicators of successful implementation with specific and realistic numerical goals such as employment placement rates, literacy improvements, self-employment starts, and the monetary value of local economic development activities.

The applicant should include a rationale for the selection of the participants (i.e., industries, regions, gender, ethnicity, age groups, or U.S. government policy interests), outline the training materials, individual assessment tools, business development approaches, other materials that will be used as well as a strategy for ensuring that the project activities will lead directly to employment and improved earned income for participants. In addition, the applicant should develop sustainable innovative strategies for involving government, employers' and workers' organizations, community-based entities, and non-governmental organizations, as appropriate, in the development, implementation, evaluation, and management of project activities.

B. Deliverables

Following the award of the cooperative agreement(s), unless otherwise indicated, the applicant must submit copies of all required reports to USDOL by the specified due dates. Other documents, such as project designs, are to be submitted by mutually agreed-upon deadlines.

1. *Project Designs.* The organization(s) awarded the cooperative agreement (grantee) will, draft the design, and submit a project document in the format established by USDOL, to include a background and justification section, project strategy (objectives, outputs, activities, indicators), project implementation timetable, project management organizational chart, project budget, logical framework and performance monitoring plan to systematically monitor project results. The document will also include sections, which cover coordination strategies, project management, and sustainability of project improvements involving government, employers' and workers' organizations as well as other non-governmental organizations as appropriate. Each project design will be drawn, in part, from the proposal written in response to this solicitation. Based upon the responses to this solicitation and subsequent to the award, it may be determined by USDOL that in order to finalize a project design, the grantee(s) will need to travel to both countries with a USDOL official for a project design mission trip.

2. *Technical Progress Reports.* The grantee(s) must furnish a typed technical report to USDOL on a quarterly basis, no later than 15 days from the last date of each quarter, i.e., 31 March, 30 June, 30 September and 31 December of each year. The 30 June (2nd quarter) and 31 December (4th quarter) reports are abbreviated and need only indicate whether the work plan was fully implemented and if not, explain why not and attach the amended work plan. The grantee(s) must also furnish a separate financial report (SF 272) to USDOL on the same quarterly basis. The format for the technical progress report will be the standard format developed by USDOL and must contain the following information:

a. For each project objective, an accurate account of activities carried out under that objective during the reporting period as it relates to the work plan;

b. Major trends in the project that note particular success with a particular activity or trends that indicate a need to readjust or expand the work plan (after a sufficient period of implementation, to be determined by USDOL in consultation with the grantee(s), this ought to include the development of individual vignettes of how specific individuals' lives and their communities were improved as a result of their participation in this project);

c. An account of problems, proposed solutions, actions taken or required regarding implementation of the project;

d. New proposals for activities, staffing, funding, etc.;

e. Lessons learned in project implementation;

f. Future actions planned in support of each project objective;

g. An accounting of staff and any sub-contractor hours expended; and

h. Aggregate amount of costs incurred during the reporting period, tracking expenditures vs. budget.

4. *Annual Work Plan.* An annual work plan for the project as implemented in each country will be submitted within 45 days after the approval of the project design by USDOL. Subsequent annual work plans will be delivered as amended to reflect modifications in implementation, no later than one year following submission of previous work plan, or to reflect amendments based on recommendations made during mid-term evaluations, no later than 30 days following the mid-term evaluation.

5. *Monitoring and Evaluation.* A performance monitoring plan will be developed in collaboration with USDOL, including beginning and ending dates for projects and planned and actual dates for mid-term and final project evaluations, and included as part of the submission of the project document for USDOL approval. The monitoring plan will be prepared after analysis of existing baseline data, including revision of indicators provided in project documents. The plan will include performance indicators and instruments to collect and report on performance data on a semi-annual basis.

6. *Evaluation Reports.* The Grant Officer's Technical Representative (GOTR) will determine on a case-by-case basis whether mid-term evaluations will be conducted by an internal or external evaluation team. All final evaluations will be external in nature. The grantee(s) must respond to any comments and recommendations resulting from the review of the mid-term report and will submit a work plan for implementing the recommendations of the mid-term report within 15 days following formal submission of the report to the grantee(s) by USDOL.

C. Production of Deliverables

1. *Materials Prepared and Purchased Under the Cooperative Agreement.* The grantee(s) must submit to USDOL all media-related and educational materials developed by it or its sub-contractors under this cooperative agreement(s), including relevant press releases, for use in this project before they are reproduced, published, or used. The grantee(s) must consult with USDOL to ensure that materials are compatible with USDOL materials relating to its overall technical assistance program, i.e., public relations material such as video and web site. USDOL considers brochures, pamphlets, videotapes, slide-tape shows, curricula, and any other training materials used in the project, educational materials. USDOL will review materials for technical accuracy. USDOL will also review training curricula and purchased training materials for accuracy before they are used. The grantee(s) must obtain prior approval from the Grant Officer for all materials developed or purchased under this cooperative agreement. All materials produced by grantee(s) must be provided to USDOL in a digital format for possible publication on the Internet by USDOL.

2. *Acknowledgment of USDOL Funding.* In all circumstances, the following must be displayed on printed materials:

Preparation of this item was funded by the United States Department of Labor under Cooperative Agreement No. [insert the appropriate cooperative agreement number].

When issuing statements, press releases, requests for proposals, bid solicitations, and other documents describing projects or programs funded in whole or in part with Federal money, all grantees receiving Federal funds, including State and local governments and recipients of research grants, must clearly state:

a. The percentage of the total costs of the program or project, which will be financed with Federal money;

b. The dollar amount of Federal funds for the project or program; and

c. The percentage and dollar amount of the total costs of the project or program that will be financed by non-governmental sources.

In consultation with USDOL, identification of USDOL's role will be determined to be one of the following:

a. The USDOL logo may be applied to USDOL-funded material prepared for world-wide distribution, including posters, videos, pamphlets, research documents, national survey results, impact evaluations, best practice

reports, and other publications of global interest. The grantee(s) will consult with USDOL on whether the logo should be used on any such items prior to final draft or final preparation for distribution. In no event shall the USDOL logo be placed on any item until USDOL has given the grantee written permission to use the logo, after obtaining appropriate internal USDOL approval for use of the logo on the item.

b. If the USDOL determines the logo is not appropriate and does not give written permission, the following notice must appear on the document:

This document does not necessarily reflect the views or policies of the U.S. Department of Labor, nor does mention of trade names, commercial products, or organizations imply endorsement by the U.S. Government.

D. Administrative Requirements

1. *General.* Grantee organizations, which may include faith-based organizations, will be subject to applicable Federal laws (including provisions of appropriations law) and the applicable Office of Management and Budget (OMB) Circulars. Determinations of allowable costs will be made in accordance with the applicable Federal cost principles, *i.e.*, Non-Profit Organizations—OMB Circular A–122. The cooperative agreement(s) awarded under this SGA will be subject to the following administrative standards and provisions, if applicable:

29 CFR part 36—Federal Standards for Nondiscrimination on the Basis of Sex in Education Programs or Activities Receiving Federal Financial Assistance.

29 CFR part 93—New Restrictions on Lobbying.

29 CFR part 95—Uniform Administrative Requirements for Grants and Agreements with Institutions of Higher Education, Hospitals and Other Non-Profit Organizations, and with Commercial Organizations, Foreign Governments, Organizations Under the Jurisdiction of Foreign Governments and International Organizations.

29 CFR part 96—Federal Standards for Audit of Federally Funded Grants, Contracts and Agreements.

29 CFR part 98—Federal Standards for Government wide Debarment and Suspension (Nonprocurement) and Government-wide Requirements for Drug-Free Workplace (Grants).

29 CRF part 99—Federal Standards for Audits of States, Local Governments, and Non-Profit Organizations.

2. *Sub-contracts.* Sub-contracts must be awarded in accordance with 29 CFR 95.40–48. In compliance with Executive Orders 12876 as amended, 13230, 12928, and 13021 as amended, the grantee(s) is strongly encouraged to provide subcontracting opportunities to Historically Black Colleges and Universities, Hispanic-Serving Institutions and Tribal Colleges and Universities.

3. *Key Personnel.* The applicant must list the individual(s) who has been designated as having primary responsibility for the conduct and completion of all work in the project it proposes. The grantee(s) agrees to inform the GOTR whenever it appears impossible for one or more of these individual(s) to continue work on the project as planned. The grantee(s) may nominate substitute personnel for approval of the GOTR, however, the grantee(s) must obtain prior approval from the Grant Officer for all key personnel. If the Grant Officer determines not to approve the personnel change, he/she reserves the right to terminate the cooperative agreement.

4. *Encumbrance of Cooperative Agreement Funds.* Cooperative agreement funds may not be encumbered/obligated by the grantee(s) before or after the cooperative agreement period of performance. Encumbrances/obligations outstanding as of the end of the cooperative agreement period may be liquidated (paid out) after the end of the cooperative agreement period. Such encumbrances/obligations may involve only commitments for which a need existed during the cooperative agreement period and which are supported by approved contracts, purchase orders, requisitions, invoices, bills, or other evidence of liability consistent with the grantee(s)'s purchasing procedures and incurred within the cooperative agreement period. All encumbrances/obligations incurred during the cooperative agreement period must be liquidated within 90 days after the end of the cooperative agreement period, if practicable.

5. *Site Visits.* USDOL, through its authorized representatives, has the right, at all reasonable times, to make site visits to review project accomplishments and management control systems and to provide such technical assistance as may be required. If USDOL makes any site visit on the premises of the grantee(s) or a sub-contractor(s) under this cooperative agreement(s), the grantee(s) must provide and must require its sub-contractors to provide all reasonable facilities and assistance for the safety and convenience of the Government representatives in the performance of their duties. All site visits and evaluations must be performed in such a manner as will not unduly delay the work.

V. Review and Selection of Applications for Cooperative Agreement Award

A. The Review Process

USDOL will screen all applications to determine whether all required elements are present and clearly identifiable. A technical panel will objectively rate each complete application against the criteria described in this announcement. The panel recommendations to the Grant Officer are advisory in nature. The Grant Officer may elect to select one or more grantees on the basis of the initial proposal submission; or, the Grant Officer may establish a competitive or technically acceptable range for the purpose of selecting qualified applicants. If deemed appropriate, following the Grant Officer's call for the preparation and receipt of final revisions of proposals, the evaluation process described above will be repeated to consider such revisions. The Grant Officer will make a final selection determination based on what is most advantageous to the Government, considering factors such as panel findings, geographic presence of the applicants, the best value to the government, cost and other factors. The Grant Officer's determination for award under this SGA is final.

Notice: Selection of an organization as a cooperative agreement recipient does not constitute approval of the cooperative agreement application as submitted. Before the actual cooperative agreement is awarded, the Grant Officer may enter into negotiations concerning such items as program components, funding levels, and administrative systems. If the negotiations do not result in an acceptable submission, the Grant Officer reserves the right to terminate the negotiation and decline to fund the application.

B. Rating Criteria and Selection

The technical panel will review grant applicants against the criteria listed below on the basis of 100 points with up to additional five points available for non-federal or leveraged resources. The criteria are presented in the order of emphasis that they will receive.

1. Approach, Understanding of the Programmatic Area and Specific Country Context, and Management Plan (40 points)

a. *Overview.* This section of the proposal must provide the following:

(1) A summary of the applicant's general strategy for each country in addressing the needs as identified in Section I of this SGA;

(2) The applicant's rationale for selection of the target population(s), which demonstrates an understanding of the in-country situation with regards to specific populations and communities and the delivery of workforce and economic development services;

(3) The applicant's identification of specific, challenging, but realistic numerical goals for project success;

(4) Indicators for assessing attainment of the goals; and

(5) The other expected outcomes over the period of performance for each task.

The applicant must describe in detail the proposed approach to comply with each requirement in Section IV.A of this solicitation, including all tasks and methods to be utilized to implement the project. Also, the applicant must explain the rationale for using this approach. In addition, this section of the proposal must demonstrate the applicant's thorough knowledge and understanding of the education and employment needs of the target populations in each of the specific country contexts, best-practice approaches for meeting these needs, working with the tripartite partners, and work that has been done and is being done in the field as applied to each country.

b. *Logical Framework.* The strategy should include an outline of the objectives, activities, outputs, assumptions, and indicators envisioned for implementation of the project.

c. *Implementation Plan.* The applicant must submit an implementation plan for the entire project, preferably with a visual aid such as a Gantt chart. The implementation plan should outline the approach that will be used to implement the project including a list of activities and an explanation of how each relates to the overall development objective of expanding employment opportunities and increasing income security for the project participants and their communities. The plan should list the activities envisioned for the life of the project as well as scheduling of activities by objective, starting with the execution of the cooperative agreement and ending with the final report. In describing the implementation plan, the applicant must address the following points:

(1) Describe the use of existing or potential infrastructure and the use of qualified personnel, including qualified foreign nationals, to implement the project in each country. One chart for the entire project is acceptable if the approach will be uniform in both countries. Describe existing education, training, and personal assessment materials, if any, that will be used and explain how other materials and training curriculum will be developed.

(2) Explain the strategy for delivering the education and training services including where, when, and how the services will be delivered and whether any supportive services, such as child care, food allocation, and transportation, will be provided. Outline how the local partners will be involved in the implementation.

(3) Demonstrate how the project will strengthen national, local, public, and private institutions and policies on meeting the education, training, employment, and economic development needs of the target population(s) and their communities.

(4) Demonstrate how the organization would systematically monitor and report on project performance to measure the achievement of the project objective(s).

(5) Demonstrate how the organization would build the national, regional, and local capacity to ensure that project activities are sustained after completion of the project.

d. *Management and Staff Loading Plan.* The management plan for each country must also include a management and staff loading plan. The management plan should include the following:

(1) A project organizational chart, demonstrating management structure, key personnel positions, and indicating proposed links with the relevant national, regional, and local government entities, employer, worker, non-governmental, and community-based organizations, and other significant local actors.

(2) A description of the functional relationship between elements of the project's organization; and

(3) The identity of the individual responsible for project management and the lines of authority between this individual and other elements of the project.

The staff loading plan must identify all key tasks and the person-days required to complete each task. Labor estimates for each task must be broken down by individuals assigned to the task, including sub-contractors and consultants. All key tasks must be charted to show time required to perform them by months or weeks.

2. Experience and Qualifications of the Organization (25 points)

The evaluation criteria in this category are as follows:

a. The applicant, either individually or together with its partners or co-applicants, in applying for the award must demonstrate experience with workforce education, skills training, literacy, employment creation, self-employment assessment and promotion, and local economic development; working directly with government ministries, employers' and worker's organizations, non-governmental and community-based organizations, and local government officials; analyzing relevant national and provincial laws relating to discrimination in education, training, and employment; and implementing a project in both countries.

Organizations applying in partnership or as co-applicants must identify the lead organization, demonstrate an approach to ensure successful collaboration including clear delineation of respective roles and responsibilities, and submit a signed letter of agreement between the parties verifying the commitment of the parties to work together to implement the program. The partnership agreement must include a designation for the lead organization. (Please note that points will be neither awarded nor deducted for partnership formation as long as a collaborative capability can be shown.)

b. The organization(s) must also demonstrate that it has an effective system of operations in each designated country. These contacts must enable the organization(s) to demonstrate that they can perform successfully in both countries.

c. The proposal must include information regarding previous grants, contracts, or cooperative agreements, including all of the following:

(1) The organization for which the work was done;

(2) A contact person in that organization with his/her current phone number;

(3) The dollar value of the grant, contract, or cooperative agreement for the project(s);

(4) The time frame and professional effort, either directly by key personnel, by consultants, or under contractual arrangements involved in the project(s);

(5) A brief summary of the work performed; and

(6) A brief summary of accomplishments.

This information on previous grants and contracts shall be provided in appendices and will *not* count in the 40-page maximum page requirement.

3. Experience and Qualifications of Key Personnel (25 points)

This section of the application must include sufficient information for judging the quality and the competence of key staff proposed to be assigned to the project(s) proposed to assure that they meet the required qualifications. Successful performance of the proposed work depends heavily on the qualifications of the individuals committed to the project. Accordingly, in its evaluation of each application, USDOL will place emphasis on the applicant's commitment of key personnel qualified for the work involved in accomplishing the assigned tasks. Information provided on the experience and educational background of personnel must indicate the following:

(a) The identity of key personnel assigned to the project. ''Key personnel'' are staff who are essential to the successful operation of the project and completion of the proposed work and, therefore, may not be replaced or have their hours reduced without the approval of the Grant Officer.

(b) The educational background and experience of all staff to be assigned to the project.

(c) The special capabilities of staff that demonstrate prior experience in organizing, managing and performing similar efforts.

(d) The current employment status of staff and their availability for this project. The applicant must also indicate whether the proposed work will be performed by persons currently employed or is dependent upon planned recruitment or sub-contracting.

Note that management and professional technical staff members comprising the applicant's proposed team should be individuals who have prior experience with organizations working in similar efforts, and are fully qualified to perform work specified in the Statement of Work. Where sub-contractors or outside assistance is proposed, organizational control should be clearly delineated to ensure responsiveness to the needs of USDOL. Key personnel must sign letters of agreement to serve on the project and indicate availability to commence work within three weeks of grant award.

The following information must be furnished:

(a) The applicant must designate a Project Director to oversee the project and other key personnel to perform the requirements necessary for success in both countries. The Project Director must have a minimum of three years of professional experience in a leadership role in the implementation of workforce education and training programs and local economic development in a developing country, including project design, management, monitoring, and evaluation, participant selection, stakeholder identification and inclusion, and the development and effective use of outreach, education, training, and assessment materials.

(b) The applicant should specify other personnel proposed to carry out the requirements of this solicitation.

(c) A resume should be provided for each of the key personnel to be assigned to the project. At a minimum, each resume must include: the individual's current employment status and previous work experience, including position title, duties performed, dates in position, employing organizations, and educational background. Duties must be clearly defined in terms of role performed, i.e., manager, team leader, consultant, etc. (Resumes must be included as attachments, which do not count against the page limitation.)

(d) The special capabilities of staff that demonstrate prior experience in organization, managing, and performing similar efforts.

(e) The current employment status of key personnel proposed for work under the cooperative agreement, i.e., whether personnel are currently employed by the organization or whether their employment depends upon planned recruitment or sub-contracting.

4. Budget Plan (10 points)

The applicant must develop two proposed budgets, one each for implementation of the project in each country. This section of the application must explain the costs for performing all of the requirements presented in this solicitation and for producing all required reports and other deliverables presented in this solicitation; costs must include labor, training, material production and dissemination, equipment, travel, and other related costs. The budget plans will be evaluated solely for the purpose of determining the efficient and effective allocation of funding for proposed program implementation. Preference may be given to applicants with low administrative costs. Administrative costs shall be reflected separately on the budget plan from programmatic costs.

(e) The current employment status of key personnel proposed for work under the cooperative agreement, i.e., whether personnel are currently employed by the organization or whether their employment depends upon planned recruitment or sub-contracting.

5. Leveraging of Funding (5 points)

USDOL will give up to five (5) additional rating points to applications that include non-Federal resources that significantly expand the dollar amount, non-monetary resources, size and scope of the proposal, or capitalize upon previous U.S. government or private investments. The applicant may include any leveraging or co-funding anticipated. To be eligible for additional points under this criterion, the applicant must list the source(s) of funds, the nature, and activities anticipated with these funds under this cooperative agreement, and any partnerships, linkages or coordination of activities, and/or cooperative funding.

This stated commitment will be incorporated into the text of the cooperative agreement with the selected applicant(s).

Signed at Washington, DC, this 31 day of July, 2002.

Daniel P. Murphy,

Director, Procurement Services Center.

BILLING CODE 4510–28–P

APPLICATION FOR FEDERAL ASSISTANCE

OMB Approval No. 0348-0043

2. DATE SUBMITTED	Applicant Identifier	
3. DATE RECEIVED BY STATE	State Application Identifier	
4. DATE RECEIVED BY FEDERAL AGENCY	Federal Identifier	

1. TYPE OF SUBMISSION:

Application: ☐ Construction ☐ Non-Construction

Preapplication: ☐ Construction ☐ Non-Construction

5. APPLICANT INFORMATION

Legal Name:

Organizational Unit:

Address *(give city, county, State, and zip code)*:

Name and telephone number of person to be contacted on matters involving this application *(give area code)*

6. EMPLOYER IDENTIFICATION NUMBER *(EIN)*:

☐☐ — ☐☐☐☐☐☐☐

7. TYPE OF APPLICANT: *(enter appropriate letter in box)* ☐

A. State
B. County
C. Municipal
D. Township
E. Interstate
F. Intermunicipal
G. Special District
H. Independent School Dist.
I. State Controlled Institution of Higher Learning
J. Private University
K. Indian Tribe
L. Individual
M. Profit Organization
N. Other (Specify) _____

8. TYPE OF APPLICATION:

☐ New ☐ Continuation ☐ Revision

If Revision, enter appropriate letter(s) in box(es) ☐ ☐

A. Increase Award B. Decrease Award C. Increase Duration
D. Decrease Duration Other*(specify)*:

_____

9. NAME OF FEDERAL AGENCY:

10. CATALOG OF FEDERAL DOMESTIC ASSISTANCE NUMBER:

☐☐ — ☐☐☐

TITLE:

11. DESCRIPTIVE TITLE OF APPLICANT'S PROJECT:

12. AREAS AFFECTED BY PROJECT *(Cities, Counties, States, etc.)*:

13. PROPOSED PROJECT

Start Date	Ending Date

14. CONGRESSIONAL DISTRICTS OF:

a. Applicant

b. Project

15. ESTIMATED FUNDING:

a. Federal	$ .00
b. Applicant	$ .00
c. State	$ .00
d. Local	$ .00
e. Other	$ .00
f. Program Income	$ .00
g. TOTAL	$ 0.00

16. IS APPLICATION SUBJECT TO REVIEW BY STATE EXECUTIVE ORDER 12372 PROCESS?

a. YES. THIS PREAPPLICATION/APPLICATION WAS MADE AVAILABLE TO THE STATE EXECUTIVE ORDER 12372 PROCESS FOR REVIEW ON:

DATE _____

b. No. ☐ PROGRAM IS NOT COVERED BY E. O. 12372
☐ OR PROGRAM HAS NOT BEEN SELECTED BY STATE FOR REVIEW

17. IS THE APPLICANT DELINQUENT ON ANY FEDERAL DEBT?

☐ Yes If "Yes," attach an explanation. ☐ No

18. TO THE BEST OF MY KNOWLEDGE AND BELIEF, ALL DATA IN THIS APPLICATION/PREAPPLICATION ARE TRUE AND CORRECT, THE DOCUMENT HAS BEEN DULY AUTHORIZED BY THE GOVERNING BODY OF THE APPLICANT AND THE APPLICANT WILL COMPLY WITH THE ATTACHED ASSURANCES IF THE ASSISTANCE IS AWARDED.

a. Type Name of Authorized Representative	b. Title	c. Telephone Number
d. Signature of Authorized Representative		e. Date Signed

Previous Edition Usable
Authorized for Local Reproduction

Standard Form 424 (Rev. 7-97)
Prescribed by OMB Circular A-102

INSTRUCTIONS FOR THE SF-424

Public reporting burden for this collection of information is estimated to average 45 minutes per response, including time for reviewing instructions, searching existing data sources, gathering and maintaining the data needed, and completing and reviewing the collection of information. Send comments regarding the burden estimate or any other aspect of this collection of information, including suggestions for reducing this burden, to the Office of Management and Budget, Paperwork Reduction Project (0348-0043), Washington, DC 20503.

PLEASE DO NOT RETURN YOUR COMPLETED FORM TO THE OFFICE OF MANAGEMENT AND BUDGET. SEND IT TO THE ADDRESS PROVIDED BY THE SPONSORING AGENCY.

This is a standard form used by applicants as a required facesheet for preapplications and applications submitted for Federal assistance. It will be used by Federal agencies to obtain applicant certification that States which have established a review and comment procedure in response to Executive Order 12372 and have selected the program to be included in their process, have been given an opportunity to review the applicant's submission.

Item:	Entry:
1.	Self-explanatory.
2.	Date application submitted to Federal agency (or State if applicable) and applicant's control number (if applicable).
3.	State use only (if applicable).
4.	If this application is to continue or revise an existing award, enter present Federal identifier number. If for a new project, leave blank.
5.	Legal name of applicant, name of primary organizational unit which will undertake the assistance activity, complete address of the applicant, and name and telephone number of the person to contact on matters related to this application.
6.	Enter Employer Identification Number (EIN) as assigned by the Internal Revenue Service.
7.	Enter the appropriate letter in the space provided.
8.	Check appropriate box and enter appropriate letter(s) in the space(s) provided: -- "New" means a new assistance award. -- "Continuation" means an extension for an additional funding/budget period for a project with a projected completion date. -- "Revision" means any change in the Federal Government's financial obligation or contingent liability from an existing obligation.
9.	Name of Federal agency from which assistance is being requested with this application.
10.	Use the Catalog of Federal Domestic Assistance number and title of the program under which assistance is requested.
11.	Enter a brief descriptive title of the project. If more than one program is involved, you should append an explanation on a separate sheet. If appropriate (e.g., construction or real property projects), attach a map showing project location. For preapplications, use a separate sheet to provide a summary description of this project.

Item:	Entry:
12.	List only the largest political entities affected (e.g., State, counties, cities).
13.	Self-explanatory.
14.	List the applicant's Congressional District and any District(s) affected by the program or project.
15.	Amount requested or to be contributed during the first funding/budget period by each contributor. Value of in-kind contributions should be included on appropriate lines as applicable. If the action will result in a dollar change to an existing award, indicate *only* the amount of the change. For decreases, enclose the amounts in parentheses. If both basic and supplemental amounts are included, show breakdown on an attached sheet. For multiple program funding, use totals and show breakdown using same categories as item 15.
16.	Applicants should contact the State Single Point of Contact (SPOC) for Federal Executive Order 12372 to determine whether the application is subject to the State intergovernmental review process.
17.	This question applies to the applicant organization, not the person who signs as the authorized representative. Categories of debt include delinquent audit disallowances, loans and taxes.
18.	To be signed by the authorized representative of the applicant. A copy of the governing body's authorization for you to sign this application as official representative must be on file in the applicant's office. (Certain Federal agencies may require that this authorization be submitted as part of the application.)

SF-424 (Rev. 7-97) Back

BUDGET INFORMATION - Non-Construction Programs

OMB Approval No. 0348-0044

SECTION A - BUDGET SUMMARY

Grant Program Function or Activity (a)	Catalog of Federal Domestic Assistance Number (b)	Estimated Unobligated Funds		New or Revised Budget		
		Federal (c)	Non-Federal (d)	Federal (e)	Non-Federal (f)	Total (g)
1.		$	$	$	$	$ 0.00
2.						0.00
3.						0.00
4.						0.00
5. Totals		$ 0.00	$ 0.00	$ 0.00	$ 0.00	$ 0.00

SECTION B - BUDGET CATEGORIES

6. Object Class Categories	GRANT PROGRAM, FUNCTION OR ACTIVITY				Total
	(1)	(2)	(3)	(4)	(5)
a. Personnel	$	$	$	$	$ 0.00
b. Fringe Benefits					0.00
c. Travel					0.00
d. Equipment					0.00
e. Supplies					0.00
f. Contractual					0.00
g. Construction					0.00
h. Other					0.00
i. Total Direct Charges *(sum of 6a-6h)*	0.00	0.00	0.00	0.00	0.00
j. Indirect Charges					0.00
k. TOTALS *(sum of 6i and 6j)*	$ 0.00	$ 0.00	$ 0.00	$ 0.00	$ 0.00
7. Program Income	$	$	$	$	$ 0.00

Authorized for Local Reproduction

Standard Form 424A (Rev. 7-97)
Prescribed by OMB Circular A-102

Previous Edition Usable

SECTION C - NON-FEDERAL RESOURCES

(a) Grant Program	(b) Applicant	(c) State	(d) Other Sources	(e) TOTALS
8.	$	$	$	$ 0.00
9.				0.00
10.				0.00
11.				0.00
12. TOTAL *(sum of lines 8-11)*	$ 0.00	$ 0.00	$ 0.00	$ 0.00

SECTION D - FORECASTED CASH NEEDS

	Total for 1st Year	1st Quarter	2nd Quarter	3rd Quarter	4th Quarter
13. Federal	$ 0.00	$	$	$	$
14. Non-Federal	0.00				
15. TOTAL *(sum of lines 13 and 14)*	$ 0.00	$ 0.00	$ 0.00	$ 0.00	$ 0.00

SECTION E - BUDGET ESTIMATES OF FEDERAL FUNDS NEEDED FOR BALANCE OF THE PROJECT

(a) Grant Program	FUTURE FUNDING PERIODS (Years)			
	(b) First	(c) Second	(d) Third	(e) Fourth
16.	$	$	$	$
17.				
18.				
19.				
20. TOTAL *(sum of lines 16-19)*	$ 0.00	$ 0.00	$ 0.00	$ 0.00

SECTION F - OTHER BUDGET INFORMATION

21. Direct Charges:	22. Indirect Charges:
23. Remarks:	

Authorized for Local Reproduction

Standard Form 424A (Rev. 7-97) Page 2

INSTRUCTIONS FOR THE SF-424A

Public reporting burden for this collection of information is estimated to average 180 minutes per response, including time for reviewing instructions, searching existing data sources, gathering and maintaining the data needed, and completing and reviewing the collection of information. Send comments regarding the burden estimate or any other aspect of this collection of information, including suggestions for reducing this burden, to the Office of Management and Budget, Paperwork Reduction Project (0348-0044), Washington, DC 20503.

PLEASE DO NOT RETURN YOUR COMPLETED FORM TO THE OFFICE OF MANAGEMENT AND BUDGET. SEND IT TO THE ADDRESS PROVIDED BY THE SPONSORING AGENCY.

General Instructions

This form is designed so that application can be made for funds from one or more grant programs. In preparing the budget, adhere to any existing Federal grantor agency guidelines which prescribe how and whether budgeted amounts should be separately shown for different functions or activities within the program. For some programs, grantor agencies may require budgets to be separately shown by function or activity. For other programs, grantor agencies may require a breakdown by function or activity. Sections A, B, C, and D should include budget estimates for the whole project except when applying for assistance which requires Federal authorization in annual or other funding period increments. In the latter case, Sections A, B, C, and D should provide the budget for the first budget period (usually a year) and Section E should present the need for Federal assistance in the subsequent budget periods. All applications should contain a breakdown by the object class categories shown in Lines a-k of Section B.

Section A. Budget Summary Lines 1-4 Columns (a) and (b)

For applications pertaining to a *single* Federal grant program (Federal Domestic Assistance Catalog number) and *not requiring* a functional or activity breakdown, enter on Line 1 under Column (a) the Catalog program title and the Catalog number in Column (b).

For applications pertaining to a *single* program *requiring* budget amounts by multiple functions or activities, enter the name of each activity or function on each line in Column (a), and enter the Catalog number in Column (b). For applications pertaining to multiple programs where none of the programs require a breakdown by function or activity, enter the Catalog program title on each line in *Column* (a) and the respective Catalog number on each line in Column (b).

For applications pertaining to *multiple* programs where one or more programs *require* a breakdown by function or activity, prepare a separate sheet for each program requiring the breakdown. Additional sheets should be used when one form does not provide adequate space for all breakdown of data required. However, when more than one sheet is used, the first page should provide the summary totals by programs.

Lines 1-4, Columns (c) through (g)

For new applications, leave Column (c) and (d) blank. For each line entry in Columns (a) and (b), enter in Columns (e), (f), and (g) the appropriate amounts of funds needed to support the project for the first funding period (usually a year).

For continuing grant program applications, submit these forms before the end of each funding period as required by the grantor agency. Enter in Columns (c) and (d) the estimated amounts of funds which will remain unobligated at the end of the grant funding period only if the Federal grantor agency instructions provide for this. Otherwise, leave these columns blank. Enter in columns (e) and (f) the amounts of funds needed for the upcoming period. The amount(s) in Column (g) should be the sum of amounts in Columns (e) and (f).

For supplemental grants and changes to existing grants, do not use Columns (c) and (d). Enter in Column (e) the amount of the increase or decrease of Federal funds and enter in Column (f) the amount of the increase or decrease of non-Federal funds. In Column (g) enter the new total budgeted amount (Federal and non-Federal) which includes the total previous authorized budgeted amounts plus or minus, as appropriate, the amounts shown in Columns (e) and (f). The amount(s) in Column (g) should not equal the sum of amounts in Columns (e) and (f).

Line 5 - Show the totals for all columns used.

Section B Budget Categories

In the column headings (1) through (4), enter the titles of the same programs, functions, and activities shown on Lines 1-4, Column (a), Section A. When additional sheets are prepared for Section A, provide similar column headings on each sheet. For each program, function or activity, fill in the total requirements for funds (both Federal and non-Federal) by object class categories.

Line 6a-i - Show the totals of Lines 6a to 6h in each column.

Line 6j - Show the amount of indirect cost.

Line 6k - Enter the total of amounts on Lines 6i and 6j. For all applications for new grants and continuation grants the total amount in column (5), Line 6k, should be the same as the total amount shown in Section A, Column (g), Line 5. For supplemental grants and changes to grants, the total amount of the increase or decrease as shown in Columns (1)-(4), Line 6k should be the same as the sum of the amounts in Section A, Columns (e) and (f) on Line 5.

Line 7 - Enter the estimated amount of income, if any, expected to be generated from this project. Do not add or subtract this amount from the total project amount, Show under the program

INSTRUCTIONS FOR THE SF-424A (continued)

narrative statement the nature and source of income. The estimated amount of program income may be considered by the Federal grantor agency in determining the total amount of the grant.

Section C. Non-Federal Resources

Lines 8-11 Enter amounts of non-Federal resources that will be used on the grant. If in-kind contributions are included, provide a brief explanation on a separate sheet.

Column (a) - Enter the program titles identical to Column (a), Section A. A breakdown by function or activity is not necessary.

Column (b) - Enter the contribution to be made by the applicant.

Column (c) - Enter the amount of the State's cash and in-kind contribution if the applicant is not a State or State agency. Applicants which are a State or State agencies should leave this column blank.

Column (d) - Enter the amount of cash and in-kind contributions to be made from all other sources.

Column (e) - Enter totals of Columns (b), (c), and (d).

Line 12 - Enter the total for each of Columns (b)-(e). The amount in Column (e) should be equal to the amount on Line 5, Column (f), Section A.

Section D. Forecasted Cash Needs

Line 13 - Enter the amount of cash needed by quarter from the grantor agency during the first year.

Line 14 - Enter the amount of cash from all other sources needed by quarter during the first year.

Line 15 - Enter the totals of amounts on Lines 13 and 14.

Section E. Budget Estimates of Federal Funds Needed for Balance of the Project

Lines 16-19 - Enter in Column (a) the same grant program titles shown in Column (a), Section A. A breakdown by function or activity is not necessary. For new applications and continuation grant applications, enter in the proper columns amounts of Federal funds which will be needed to complete the program or project over the succeeding funding periods (usually in years). This section need not be completed for revisions (amendments, changes, or supplements) to funds for the current year of existing grants.

If more than four lines are needed to list the program titles, submit additional schedules as necessary.

Line 20 - Enter the total for each of the Columns (b)-(e). When additional schedules are prepared for this Section, annotate accordingly and show the overall totals on this line.

Section F. Other Budget Information

Line 21 - Use this space to explain amounts for individual direct object class cost categories that may appear to be out of the ordinary or to explain the details as required by the Federal grantor agency.

Line 22 - Enter the type of indirect rate (provisional, predetermined, final or fixed) that will be in effect during the funding period, the estimated amount of the base to which the rate is applied, and the total indirect expense.

Line 23 - Provide any other explanations or comments deemed necessary.

[FR Doc. 02–19856 Filed 8–5–02; 8:45 am]
BILLING CODE 4510–28–C

DEPARTMENT OF LABOR

Employment and Training Administration

Investigations Regarding Certifications of Eligibility To Apply for Worker Adjustment Assistance

Petitions have been filed with the Secretary of Labor under section 221(a) of the Trade Act of 1974 (''the Act'') and are identified in the Appendix to this notice. Upon receipt of these petitions, the Director of the Division of Trade Adjustment Assistance, Employment and Training Administration, has instituted investigations pursuant to section 221(a) of the Act.

The purpose of each of the investigations is to determine whether the workers are eligible to apply for adjustment assistance under Title II, Chapter 2, of the Act. The investigations will further relate, as appropriate, to the determination of the date on which total or partial separations began or threatened to begin and the subdivision of the firm involved.

The petitioners or any other persons showing a substantial interest in the subject matter of the investigations may request a public hearing, provided such request is filed in writing with the Director, Division of Trade Adjustment Assistance, at the address shown below, not later than August 16, 2002.

Interested persons are invited to submit written comments regarding the subject matter of the investigations to the Director, Division of Trade Adjustment Assistance, at the address shown below, not later than August 16, 2002.

The petitions filed in this case are available for inspection at the Office of the Director, Division of Trade Adjustment Assistance, Employment and Training Administration, U.S. Department of Labor, Room C–5311, 200 Constitution Avenue, NW., Washington, DC 20210.

Signed at Washington, DC, this 24th day of June, 2002.

Edward A. Tomchick,

Director, Division of Trade Adjustment Assistance.

Appendix

Petitions Instituted on 06/24/2002

TA–W	Subject firm (petitioners)	Location	Date of petition	Product(s)
41,689	Voluneer Knit Apparel (Comp).	Rutledge, TN	06/11/2002	Cotton Knits
41,690	Peterson-Kruse Inc. (Comp).	Rockford, IL	06/04/2002	Electrician Hard Tools
41,691	Montgomery Production (Comp).	Montgomery, IL	06/11/2002	Lipton Rice, Noodles, and Sauce
41,692	SMS Sutton (IAMAW)	Bellefonte, PA	05/24/2002	Heavy Equipment
41,693	Great Lakes Fleet, Inc. (USWA).	Duluth, MN	05/20/2002	Bulk Cargo Transport
41,694	Joy Mining Machinery (IBB).	Mt. Vernon, IL	06/03/2002	Chains
41,695	P.C.C. Airfoils (MWA)	Minerva, OH	06/05/2002	Metal Castings
41,696	eMag Solutions LLC (Wrks).	Graham, TX	06/05/2002	Magnetic Computer Tape
41,697	Silver Furniture (Comp)	Knoxville, TN	06/06/2002	Tables
41,698	Volant Ski Co., LLC (Wrks).	Wheatridge, CO	06/05/2002	Alpine Skis
41,699	Jean Michael's Inc. (UNITE).	Willimgboro, NJ	06/03/2002	Womens Apparel
41,700	Flextronics International (Wrks).	Longmont, CO	05/31/2002	PCB Boards
41,701	FCI Electronics (Wrks)	Etters, PA	06/03/2002	Fiber Optic Cables
41,702	Farmland Industries, Inc (Comp).	Pollock, LA	05/14/2002	Nitrogen Fertilizer/ Androus Ammonia
41,703	E.I. DuPont (Comp)	Orange, TX	06/04/2002	Polyethylene/Plastics
41,704	LTV Steel Tubular (USWA).	Marion, OH	05/30/2002	Flat Steel
41,705	Cooper Crouse-Hinds (Wrks).	Roanoke, VA	06/03/2002	Compression Fittings
41,706	Henry's Cutting Service (Wrks).	Hialeah, FL	05/10/2002	Cutting Services
41,707	Jarvis East (Wrks)	Palmer, MA	05/31/2002	Casters and Wheels
41,708	Rosemont Analytical (Comp).	Orrville, OH	05/27/2002	Combustibles
41,709	Elbeco, Inc. (Wrks)	Meyersdale, PA	05/29/2002	Uniform Shirts
41,710	Lander Co., Inc. (Comp)	Camarillo, CA	05/30/2002	Bath and Body Products
41,711	A.O. Smith (Wrks)	McMinnville, TN	05/14/2002	Engineering Services
41,712	Denim Processing Inc. (Comp).	Oneida, TN	05/31/2002	Jeans
41,713	Wiegand Appliance	Vernon, AL	06/10/2002	Electronic Heating Elements
41,714	J.R. Simplot Co (Comp)	Pocatello, ID	06/07/2002	Nitrogen & Phosphate
41,715	Superior Essex (IUE)	Elizabethtown, KY	05/17/2002	Telephone Cable
41,716	Motorola (Wrks)	Ft. Woth, TX	05/21/2002	Cell Phone Equipment
41,717	IMI Cornelius (Wrks)	Anoka, MN	06/04/2002	Beverage Dispensers
41,718	Grafx Packaging (Wrks)	Canal Wincheste, OH	06/05/2002	Folding Carton
41,719	State of the Art, Inc. (Comp).	State College, PA	06/14/2002	Film Resistors
41,720	New Boston Coke Corp (USWA).	New Boston, OH	06/13/2002	Coke

TA–W	Subject firm (petitioners)	Location	Date of petition	Product(s)
41,721	Collins and Aikman (Wrks).	Marshall, MI	05/22/2002	Ribbon Mixers
41,722	Maurice Silvera, Inc. (Wrks).	New York, NY	05/28/2002	Children's Clothing
41,723	Snorkel Manufacturing (Comp).	Elwood, KS	06/05/2002	Telescopic Boom
41,724	Lake City Manufacturing (Wrks).	Lake City, SC	05/29/2002	Shirts, Pants, Swimsuits etc
41,725	Nu-Gro Technologies (UNITE).	Gloversville, NY	05/31/2002	Fertilizer
41,726	Parker Dayco (Wrks)	Eldora, IA	05/31/2002	Shell Production Machine
41,727	Solectron of Oregon (Wrks).	Hillsboro, OR	06/06/2002	Auto Electronic Safety Components
41,728	Wesbar Corp (Comp)	Peru, IN	05/29/2002	Lights for Trailers
41,729	Sirena Apparel Group (Wrks).	Los Angeles, CA	05/29/2002	Women and Children Swimwear
41,730	Motorola, RFI (Wrks)	Phoenix, AZ	03/18/2002	Semiconductors
41,731	ABB, Inc (Wrks)	Columbus, OH	05/30/2002	Process Control Equipment
41,732	APL Logistics (Wrks)	Socorro, TX	05/13/2002	Electonics

[FR Doc. 02–19763 Filed 8–5–02; 8:45 am]

BILLING CODE 4510–30–M

DEPARTMENT OF LABOR

Employment and Training Administration

Investigations Regarding Certifications of Eligibility To Apply for NAFTA Transitional Adjustment Assistance

Petitions for transitional adjustment assistance under the North American Free Trade Agreement-Transitional Adjustment Assistance Implementation Act (Pub. L. 103–182), hereinafter called (NAFTA–TAA), have been filed with State governors under section 250 (b)(1) of Subchapter D, Chapter 2, Title II, of the Trade Act of 1974, as amended, are identified in the Appendix to this Notice. Upon notice from a Governor that a NAFTA–TAA petition has been received, the Director of the Division of Trade Adjustment Assistance (DTAA), Employment and Training Administration (ETA), Department of Labor (DOL), announces the filing of the petition and takes action pursuant to paragraphs (c) and (e) of section 250 of the Trade Act.

The purpose of the Governor's actions and the Labor Department's investigations are to determine whether the workers separated from employment on or after December 8, 1993 (date of enactment of Pub. L. 103–182) are eligible to apply for NAFTA–TAA under Subchapter D of the Trade Act because of increased imports from or the shift in production to Mexico or Canada.

The petitioners or any other persons showing a substantial interest in the subject matter of the investigations may request a public hearing with the Director of DTAA at the U.S. Department of Labor (DOL) in Washington, DC, provided such request if filed in writing with the Director of DTAA not later than August 16, 2002.

Also, interested persons are invited to submit written comments regarding the subject matter of the petitions to the Director of DTAA at the address shown below not later than August 16, 2002.

Petitions filed with the Governors are available for inspection at the Office of the Director, DTAA, ETA, DOL, Room C–5311, 200 Constitution Avenue, NW., Washington, DC 20210.

Signed at Washington, DC, this 25th day of July, 2002.

Edward A. Tomchick,

Director, Division of Trade Adjustment Assistance.

APPENDIX

Subject firm	Location	Date Received at Governor's office	Petition No.	Articles produced
Topsoil Electronics (Comp)	Wendell, NC	05/16/2002	NAFTA–6,201	Hard File Assemblies.
Pacific Northwest Sugar Co (Comp)	Moses Lake, WA	05/13/2002	NAFTA–6,202	Sugar.
Specialty Minerals, Inc (Wrks)	Plainwell, MI	05/15/2002	NAFTA–6,203	Precipitated Calcium Carbonate.
Victor Forstmann, Inc. (Wrks)	East Dublin, GA	05/08/2002	NAFTA–6,204	Wool Cloth.
ZF Meritor (Wrks)	Maxton, NC	05/17/2002	NAFTA–6,205	Heavy Duty Truck Clutches.
IEC Electronics Corp. (Wrks)	Newark, NY	05/14/2002	NAFTA–6,206	Scanning & Telecommunication Equipment.
Cains Pickles, Inc. (Co.)	South Deerfield, MA	05/20/2002	NAFTA–6,207	Pickles.
Clements Manufacturing, LLC (Comp).	Harbor Beach, MI	05/16/2002	NAFTA–6,208	Wire Harnesses.

APPENDIX—Continued

Subject firm	Location	Date Received at Governor's office	Petition No.	Articles produced
Schlumberger Oilfield Sonices (Wrks).	Webster, TX	05/16/2002	NAFTA–6,209	Oil.
Smith Aerospace (Comp.)	Malvern, PA	05/22/2002	NAFTA–6,210	Display Units & Fuel Systems.
General Electric Transportation (UE)	Erie, PA	05/23/2002	NAFTA–6,211	Locomotive Components.
Aaron Automotive (Wrks)	Joplin, MO	05/22/2002	NAFTA–6,212	Remanufacture Transmissions.
Diversified Tool Corp. (Comp.)	Cambridge Springs, PA	05/22/2002	NAFTA–6,213	
Farley's and Sathers Candy Co. (Wrks).	Pittston, PA	05/23/2002	NAFTA–6,214	Hard Candy, Chewy Candy.
J.R. Simplot Co (BCTW)	Heyburn, ID	05/20/2002	NAFTA–6,215	Fries, Hashbrowns.
Textron Golf, Turfcare (UAW)	Racine, WI	04/26/2002	NAFTA–6,216	Lawnmowers.
Protel, Inc (Wrks)	Lakeland, FL	12/03/2001	NAFTA–6,217	Pay phones.
LnSystems Technologies (Wrks)	Roanoke, VA	05/14/2002	NAFTA–6,218	Electronic Document Automation.
Pillowtex Corporation (Co.)	Phenix City, AL	05/24/2002	NAFTA–6,219	Hand towels and washclothes.
Thermal Engineering International ( ).	Wauwatosa, WI	05/24/2002	NAFTA–6,220	Heat exchangers and pressure vessels.
Collins and Aikman ( )	Marshall, MI	05/28/2002	NAFTA–6,221	Sheet form sound deadener.
Dean Pickle and Specialty Products Co ( ).	Atkins, AR	05/28/2002	NAFTA–6,222	
Gold Toe Brands, Inc ( )	Burlington, NC	05/23/2002	NAFTA–6,223	Socks.
Metokote Corporation ( )	Loudon, TN	05/07/2002	NAFTA–6,224	E-coat paint.
Breeze Industrial Products Corporation ( ).	Saltsburg, PA	05/22/2002	NAFTA–6,225	Hose clamps.
Fender Musical Instruments Corporation ( ).	Corona, CA	05/23/2002	NAFTA–6,226	Amplifiers.
ADC Telecommunications ( )	Shakopee, MN	05/30/2002	NAFTA–6,227	Optical connector.
Decrane Aircraft Seating Co. ( )	Peshtigo, WI	05/30/2002	NAFTA–6,228	X-ray and oncology medical equipment.
Insilco Technologies, Inc. (CO)	Hiddenite, NC	05/30/2002	NAFTA–6,229	Custom cable assemblies.
Premier Machining Industries, LLC ( ).	Concord, NC	05/31/2002	NAFTA–6,230	Components for MRI machines.
Thomson Consumer Electronic ( )	Socomo, TX	05/31/2002	NAFTA–6,231	Television.
West Penn Hat & Cap Corporation ( ).	Creighton, PA	05/31/2002	NAFTA–6,232	Caps, visors, and constructed men's hats.
Moltrup Steel Products Company ( )	Beaver Falls, PA	05/31/2002	NAFTA–6,233	Cold drawn bar steel products.
Scotty's Fashions of Lehighton, Inc. ( ).	Lehighton, PA	05/31/2002	NAFTA–6,234	Garments, basketliners and chair covers.
Mechanical Products ( )	Jackson, MI	05/30/2002	NAFTA–6,235	Circuit breakers for airospace.
Burlington Industries, Inc. ( )	Greensboro, NC	05/31/2002	NAFTA–6,236	Upholstery fab., bedding & windows fash.
Buehler Motor, Inc. (Co.)	Kinston, NC	05/31/2002	NAFTA–6,237	Permanent magnet DC motors.
Siemens Energy & Automation Inc. ( ).	Belle Fontaine, OH	05/20/2002	NAFTA–6,238	Distribution.
Square D Company ( )	Oxford, OH	05/20/2002	NAFTA–6,239	Wireway.
Price Pfister ( )	Pacoima, CA	05/23/2002	NAFTA–6,240	Fabrication and machine shops.
Henry's Cutting Service ( )	Hialeah, FL	06/07/2002	NAFTA–6,241	
Nu-Gro Technologies, Inc. ( )	Gloversville, NY	06/07/2002	NAFTA–6,242	Fertilizer.
VMV Enterprises ( )	Paducah, KY	05/24/2002	NAFTA–6,243	Rebuilds component parts for locomotives.
Specialty Machine Company, Inc. ( )	Gastonia, NC	05/22/2002	NAFTA–6,244	Tool and die parts.

APPENDIX—Continued

Subject firm	Location	Date Received at Governor's office	Petition No.	Articles produced
Oxord Industries, Inc. ( )	Walhalla, SC	06/03/2002	NAFTA–6,245	Women's apparel.
JD Holding Company & Subsidiaries, Inc. ( ).	Springport, MI	06/03/2002	NAFTA–6,246	Automatic brake systems.
DuPont Company ( )	Niagara Falls, NY	06/03/2002	NAFTA–6,247	Terathane-polyethylene glycol.
Lear Corporation Marlette ( )	Marlette, MI	06/03/2002	NAFTA–6,248	Automative & Truck headliner & sunvisor.
Standex Corp. ( )	Palmer, MA	06/04/2002	NAFTA–6,249	Casters, bolts, stems.
Florsheim Distribution Center ( )	Jefferson City, MO	05/23/2002	NAFTA–6,250	Footwear.
Kimble Glass ( )	Lenoir, NC	06/05/2002	NAFTA–6,251	Deco printers, pipet machines.
Nichirin Coupler ( )	El Paso, TX	06/05/2002	NAFTA–6,252	Alum. pipe & flanges.
Calumet Steet Company	Chicago Heights, IL	06/06/2002	NAFTA–6,253	Steel.
Denim Processing, Inc	Oneida, TN	06/05/2002	NAFTA–6,254	Menswear dockers.
Chevron Phillips Chemical ( )	Orange, TX	06/07/2002	NAFTA–6,255	High density polyethylene.
Alexander Garments (Wrks)	Hialeah, FL	05/24/2002	NAFTA–6,256	Boys' Pants.
Associated Garments, LLP ( )	Miami, FL	06/04/2002	NAFTA–6,257	Jeans.
Jones Apparel Group ( )	Rural Hall, NC	06/05/2002	NAFTA–6,258	Raw material for clothing.
Stream International ( )	Memphis, TN	06/06/2002	NAFTA–6,259	Technical phone support.
GretagMacbeth ( )		05/14/2002	NAFTA–6,260	
Pepperell Paper Company ( )	Pepperell, MA	05/15/2002	NAFTA–6,261	Colored kraft paper.
Taconite Engineering & Mfg. Co. ( )	Hibbing, MN	06/03/2002	NAFTA–6,262	Roll screen used to size pellets (metal).
Harry J. Price Textiles, Inc. ( )	Lowell, NC	05/22/2002	NAFTA–6,263	Textiles.
Washington Garment Company, Inc. ( ).	Washington, NC	06/11/2002	NAFTA–6,264	Children's dresses.
Ark-Les Corp. (Comp)	Raleigh, NC	06/12/2002	NAFTA–6,265	Clutch and flow switches.
Landers Co., Inc. (Comp)	Camarillo, CA	06/05/2002	NAFTA–6,266	Mouthwash, gels, creams.
Wesbar Corp. (Comp)	Peru, IN	06/12/2002	NAFTA–6,267	Trailer lights and wire harnesses.
Ilsco Corp. (Comp)	Glasgow, KY	05/21/2002	NAFTA–6,268	Electrical connectors.
Kraft Foods, Inc. (Comp)	Chicago, IL	06/12/2002	NAFTA–6,269	Powered soft drinks, barbeque sauce.
Sovereign Specialty Chemicals (IBT)	Ewing, NJ	05/21/2002	NAFTA–6,270	Adhesives, laminations, sealants.
Industrial Coils (Comp)	Baraboo, WI	06/12/2002	NAFTA–6,271	Magnetic windings.

[FR Doc. 02–19764 Filed 8–5–02; 8:45 am]

BILLING CODE 4510–30M

NATIONAL ARCHIVES AND RECORDS ADMINISTRATION

Proposal for a Redesign of Federal Records Management; Request for Comment.

AGENCY: National Archives and Records Administration (NARA).

ACTION: Notice of availability of document; request for comment.

SUMMARY: NARA is seeking public comment on the Proposal for a Redesign of Federal Records Management. This proposal is part of NARA's series of records management initiatives to examine and redesign, as necessary, its records management policies and procedures. The Proposal is available on the NARA Records Management web page at: *http://www.archives.gov/records_management/pdf/rm_redesign.pdf.* For a paper copy of the report, contact the person listed in **FOR FURTHER INFORMATION CONTACT**.

DATES: Comments must be received by September 15, 2002.

ADDRESS: Please send your comments to Susan Cummings (NPOL) by email to *susan.cummings@nara.gov* or by fax to 301–837–0319 or by mail to NPOL, National Archives at College Park, Room 4100, 8601 Adelphi Rd, College Park, MD 20740–6001.

FOR FURTHER INFORMATION CONTACT: Susan Cummings at 301–837–1636.

SUPPLEMENTARY INFORMATION: The Strategic Plan of the National Archives and Records Administration (NARA) states that NARA will ensure ready access to essential evidence that documents the rights of American citizens, the actions of Federal officials, and the national experience. In support of the NARA Strategic Plan, this Proposal for a Redesign of Federal Records Management lays out a strategy for a redesigned records management program at NARA. The strategy calls for NARA to partner with stakeholders to ensure that:

- Federal agencies can economically and effectively create and manage records necessary to meet business needs,
- Records are kept long enough to protect rights, assure accountability, and document the national experience, and
- Records are destroyed when they are no longer needed and it is practical to do so.

Dated: August 2, 2002.

Nancy Allard,

Federal Register Liaison.

[FR Doc. 02–19909 Filed 8–5–02; 8:45 am]

BILLING CODE 7515–01–P

NATIONAL SCIENCE FOUNDATION

National Science Board; Sunshine Act Meeting

DATE AND TIME: August 14, 2002: 10 a.m.–10:30 a.m., Closed Session; August 15, 2002: 1 p.m.–3 p.m., Closed Session; August 15, 2002: 3 p.m.–4:30 p.m., Open Session.

PLACE: The National Science Foundation, Room 1235, 4201 Wilson Boulevard, Arlington, VA 22230, *http://www.nsf.gov/nsb.*

STATUS: Part of this meeting will be closed to the public, Part of this meeting will be open to the public.

MATTERS TO BE CONSIDERED:

Wednesday, August 14, 2002

Closed Session (10 a.m.–10:30 a.m.)

—Closed Session Minutes, May, 2002.
—Election for one member of the Executive Committee.
—NSB Member Proposal.

Thursday, August 15, 2002

Closed Session (1 p.m.–3 p.m.)

—Awards and Agreements.
—NSF FY 04 Budget.

Open Session (3 p.m.–4:30 p.m.)

—Open Session Minutes, May, 2002.
—Closed Session Items for October, 2002.
—Chair's Report.
—Director's Report.
—Committee Reports.
—Other Business.

Gerard Glaser,

Executive Officer.

[FR Doc. 02–19938 Filed 8–2–02; 11:32 am]

BILLING CODE 7555–01–M

NUCLEAR REGULATORY COMMISSION

[Docket Nos. 50–282 and 50–306]

Nuclear Management Company, LLC; Notice of Issuance of Amendment to Facility Operating License

The U.S. Nuclear Regulatory Commission (Commission) has issued Amendment No. 158 to Facility Operating License No. DPR–42 and Amendment No. 149 to Facility Operating License DPR–60, issued to Nuclear Management Company, LLC (the licensee), which revised the Operating Licenses and Technical Specifications (TSs) for operation of the Prairie Island Nuclear Generating Plant, Units 1 and 2, respectively, located in Goodhue County, Minnesota. The amendments are effective as of the date of issuance.

The amendments replace the current TSs (CTS) in their entirety with a set of improved TSs (ITS) based on NUREG–1431, ''Standard Technical Specifications for Westinghouse Plants,'' Revision 1, dated April 1995, and on guidance provided in the Commission's ''Final Policy Statement on Technical Specifications Improvements for Nuclear Power Reactors,'' published on July 22, 1993 (58 FR 39132). In addition, the amendments add new conditions to the Operating Licenses regarding (1) the schedule for the first performance of new and revised surveillance requirements (four conditions), (2) the relocation of CTS requirements into licensee-controlled documents as part of the implementation of the ITS, and (3) the schedule for completion of actions associated with verifying the maximum test face velocity for the ventilation systems included in ITS Section 5.5.9.

The application for the amendment complies with the standards and requirements of the Atomic Energy Act of 1954, as amended (the Act), and the Commission's rules and regulations. The Commission has made appropriate findings as required by the Act and the Commission's rules and regulations in 10 CFR Chapter I, which are set forth in the license amendment.

Notice of Consideration of Issuance of Amendment to Facility Operating License and Opportunity for a Hearing in connection with this action was published in the **Federal Register** on June 25, 2002 (67 FR 42808). No request for a hearing or petition for leave to intervene was filed following this notice.

The Commission has prepared an Environmental Assessment related to the action and has determined not to prepare an environmental impact statement. Based upon the environmental assessment, the Commission has concluded that the issuance of the amendment will not have a significant effect on the quality of the human environment (67 FR 47868).

For further details with respect to the action see (1) the application for amendment dated December 11, 2000, as supplemented by letters dated March 6, June 5, July 3, August 13, August 29, October 15, November 12, and December 12, 2001, and January 25, January 31, February 14, February 15, February 16, March 6, April 11, May 10, May 30, June 7, June 25, and June 28, 2002 (2) Amendment No. 158 to License No. DPR–42 and Amendment No. 149 to License No. DPR–60, (3) the Commission's related Safety Evaluation, and (4) the Commission's Environmental Assessment. Documents may be examined, and/or copied for a fee, at the NRC's Public Document Room, located at One White Flint North, 11555 Rockville Pike (first floor), Rockville, Maryland. Publicly available records will be accessible electronically from the Agencywide Documents Access and Management Systems (ADAMS) Public Electronic Reading Room on the internet at the NRC Web site, *http://www.nrc.gov/NRC/ADAMS/index.html.* Persons who do not have access to ADAMS or who encounter problems in accessing the documents located in ADAMS, should contact the NRC Public Document Room Reference staff by telephone at 1–800–397–4209, 301–415–4737 or by email to *pdr@nrc.gov.*

Dated at Rockville, Maryland, this 26th day of July 2002.

For the Nuclear Regulatory Commission.

Tae Kim,

Senior Project Manager, Section 1, Project Directorate III, Division of Licensing Project Management, Office of Nuclear Reactor Regulation.

[FR Doc. 02–19776 Filed 8–5–02; 8:45 am]

BILLING CODE 7590–01–P

NUCLEAR REGULATORY COMMISSION

Sunshine Act Meeting Notice

DATE: Weeks of August 5, 12, 19, 26, September 2, 9, 2002.

PLACE: Commissioners' Conference Room, 11555 Rockville Pike, Rockville, Maryland.

STATUS: Public and Closed.

MATTER TO BE CONSIDERED:

Week of August 5, 2002

There are no meetings scheduled for the Week of August 5, 2002.

Week of August 12, 2002—Tentative

Tuesday, August 13, 2002

9:25 a.m. Affirmation Session (Public Meeting) (if needed).

9:30 a.m. Briefing on Special Review Group Response to the Differing Professional Opinion/Differing Professional View (DPO/DPV) Review (Public Meeting) (Contact: John Craig, 301–415–1703.

This meeting will be webcast live at the Web address—*www.nrc.gov.*

Week of August 19, 2002—Tentative

Wednesday, August 21, 2002

9:30 a.m. Briefing on NRC International Activities (Public Meeting) (Contact: Janice Dunn Lee, 301–415–1780).

This meeting will be web cast live at the Web address—*www.nrc.gov.*

1:55 p.m. Affirmation Session (Public Meeting) (if needed).

2 p.m. Meeting with Organization of Agreement States (OAS) and Conference of Radiation Control Program Directors (CRCPD) (Public Meeting) (Contact: John Zabko, 301–415–2308).

This meeting will be webcast live at the Web address—*www.nrc.gov.*

Week of August 26, 2002—Tentative

There are no meetings scheduled for the Week of August 26, 2002.

Week of September 2, 2002—Tentative

There are no meetings scheduled for the Week of September 2, 2002.

Week of September 9, 2002—Tentative

There are no meetings scheduled for the Week of September 9, 2002.

*The schedule for Commission meetings is subject to change on short notice. To verify the status of meetings call (recording)—(301) 415–1292. Contact person for more information: David Louis Gamberoni (301) 415–1651.

* * * * *

ADDITIONAL INFORMATION: By vote of 4–0 on July 31, the Commission determined pursuant to U.S.C. 552b(e) and § 9,107(a) of the Commission's rules that ''Affirmation of Pacific Gas & Electric Co. (Diablo Canyon Power Plant, Units, 1 and 2); Multiple Petitions to intervene'' be held on August 1, and on less than one week's notice to the public.

* * * * *

The NRC Commission Meeting Schedule can be found on the internet at: *www.nrc.gov/what-we-do/policy-making/schedule.html.*

This notice is distributed by mail to several hundred subscribers; if you no longer wish to receive it, or would like to be added to the distribution, please contact the Office of the Secretary, Washington, DC 20555 (301–415–1969). In addition, distribution of this meeting notice over the Internet system is available. If you are interested in receiving this Commission meeting schedule electronically, please send an electronic message to *dkw@nrc.gov.*

Dated: August 1, 2002.

David Louis Gamberoni,

Technical Coordinator, Office of the Secretary.

[FR Doc. 02–19913 Filed 8–2–02; 11:13 am]

BILLING CODE 7590–01–M

NUCLEAR REGULATORY COMMISSION

Biweekly Notice; Applications and Amendments to Facility Operating Licenses Involving No Significant Hazards Considerations

I. Background

Pursuant to Public Law 97–415, the U.S. Nuclear Regulatory Commission (the Commission or NRC staff) is publishing this regular biweekly notice. Public Law 97–415 revised section 189 of the Atomic Energy Act of 1954, as amended (the Act), to require the Commission to publish notice of any amendments issued, or proposed to be issued, under a new provision of section 189 of the Act. This provision grants the Commission the authority to issue and make immediately effective any amendment to an operating license upon a determination by the Commission that such amendment involves no significant hazards consideration, notwithstanding the pendency before the Commission of a request for a hearing from any person.

This biweekly notice includes all notices of amendments issued, or proposed to be issued from, July 12, 2002, through July 25, 2002. The last biweekly notice was published on July 23, 2002 (67 FR 48213).

Notice of Consideration of Issuance of Amendments to Facility Operating Licenses, Proposed No Significant Hazards Consideration Determination and Opportunity for a Hearing

The Commission has made a proposed determination that the following amendment requests involve no significant hazards consideration. Under the Commission's regulations in 10 CFR 50.92, this means that operation of the facility in accordance with the proposed amendment would not (1) involve a significant increase in the probability or consequences of an accident previously evaluated; or (2) create the possibility of a new or different kind of accident from any accident previously evaluated; or (3) involve a significant reduction in a margin of safety. The basis for this proposed determination for each amendment request is shown below.

The Commission is seeking public comments on this proposed determination. Any comments received within 30 days after the date of publication of this notice will be considered in making any final determination.

Normally, the Commission will not issue the amendment until the expiration of the 30-day notice period. However, should circumstances change during the notice period such that failure to act in a timely way would result, for example, in derating or shutdown of the facility, the Commission may issue the license amendment before the expiration of the 30-day notice period, provided that its final determination is that the amendment involves no significant hazards consideration. The final determination will consider all public and State comments received before action is taken. Should the Commission take this action, it will publish in the **Federal Register** a notice of issuance and provide for opportunity for a hearing after issuance. The Commission expects that the need to take this action will occur very infrequently.

Written comments may be submitted by mail to the Chief, Rules and Directives Branch, Division of Administrative Services, Office of Administration, U.S. Nuclear Regulatory Commission, Washington, DC 20555–0001, and should cite the publication date and page number of this **Federal Register** notice. Written comments may also be delivered to Room 6D22, Two White Flint North, 11545 Rockville Pike, Rockville, Maryland, from 7:30 a.m. to 4:15 p.m. Federal workdays. Copies of written comments received may be examined at the Commission's

Public Document Room (PDR), located at One White Flint North, 11555 Rockville Pike (first floor), Rockville, Maryland. The filing of requests for a hearing and petitions for leave to intervene is discussed below.

By September 5, 2002, the licensee may file a request for a hearing with respect to issuance of the amendment to the subject facility operating license and any person whose interest may be affected by this proceeding and who wishes to participate as a party in the proceeding must file a written request for a hearing and a petition for leave to intervene. Requests for a hearing and a petition for leave to intervene shall be filed in accordance with the Commission's ''Rules of Practice for Domestic Licensing Proceedings'' in 10 CFR part 2. Interested persons should consult a current copy of 10 CFR 2.714,[1] which is available at the Commission's PDR, located at One White Flint North, 11555 Rockville Pike (first floor), Rockville, Maryland. Publicly available records will be accessible from the Agencywide Documents Access and Management System's (ADAMS) Public Electronic Reading Room on the Internet at the NRC web site, *http://www.nrc.gov/reading-rm/doc-collections/cfr/.* If a request for a hearing or petition for leave to intervene is filed by the above date, the Commission or an Atomic Safety and Licensing Board, designated by the Commission or by the Chairman of the Atomic Safety and Licensing Board Panel, will rule on the request and/or petition; and the Secretary or the designated Atomic Safety and Licensing Board will issue a notice of a hearing or an appropriate order.

As required by 10 CFR 2.714, a petition for leave to intervene shall set forth with particularity the interest of the petitioner in the proceeding, and how that interest may be affected by the results of the proceeding. The petition should specifically explain the reasons why intervention should be permitted with particular reference to the following factors: (1) The nature of the petitioner's right under the Act to be made a party to the proceeding; (2) the nature and extent of the petitioner's property, financial, or other interest in the proceeding; and (3) the possible effect of any order which may be entered in the proceeding on the petitioner's interest. The petition should also identify the specific aspect(s) of the subject matter of the proceeding as to which petitioner wishes to intervene. Any person who has filed a petition for leave to intervene or who has been admitted as a party may amend the petition without requesting leave of the Board up to 15 days prior to the first prehearing conference scheduled in the proceeding, but such an amended petition must satisfy the specificity requirements described above.

Not later than 15 days prior to the first prehearing conference scheduled in the proceeding, a petitioner shall file a supplement to the petition to intervene which must include a list of the contentions which are sought to be litigated in the matter. Each contention must consist of a specific statement of the issue of law or fact to be raised or controverted. In addition, the petitioner shall provide a brief explanation of the bases of the contention and a concise statement of the alleged facts or expert opinion which support the contention and on which the petitioner intends to rely in proving the contention at the hearing. The petitioner must also provide references to those specific sources and documents of which the petitioner is aware and on which the petitioner intends to rely to establish those facts or expert opinion. Petitioner must provide sufficient information to show that a genuine dispute exists with the applicant on a material issue of law or fact. Contentions shall be limited to matters within the scope of the amendment under consideration. The contention must be one which, if proven, would entitle the petitioner to relief. A petitioner who fails to file such a supplement which satisfies these requirements with respect to at least one contention will not be permitted to participate as a party.

Those permitted to intervene become parties to the proceeding, subject to any limitations in the order granting leave to intervene, and have the opportunity to participate fully in the conduct of the hearing, including the opportunity to present evidence and cross-examine witnesses.

If a hearing is requested, the Commission will make a final determination on the issue of no significant hazards consideration. The final determination will serve to decide when the hearing is held.

If the final determination is that the amendment request involves no significant hazards consideration, the Commission may issue the amendment and make it immediately effective, notwithstanding the request for a hearing. Any hearing held would take place after issuance of the amendment.

If the final determination is that the amendment request involves a significant hazards consideration, any hearing held would take place before the issuance of any amendment.

A request for a hearing or a petition for leave to intervene must be filed with the Secretary of the Commission, U.S. Nuclear Regulatory Commission, Washington, DC 20555–0001, Attention: Rulemaking and Adjudications Staff, or may be delivered to the Commission's PDR, located at One White Flint North, 11555 Rockville Pike (first floor), Rockville, Maryland, by the above date. Because of continuing disruptions in delivery of mail to United States Government offices, it is requested that petitions for leave to intervene and requests for hearing be transmitted to the Secretary of the Commission either by means of facsimile transmission to 301–415–1101 or by e-mail to *hearingdocket@nrc.gov.* A copy of the request for hearing and petition for leave to intervene should also be sent to the Office of the General Counsel, U.S. Nuclear Regulatory Commission, Washington, DC 20555–0001, and because of continuing disruptions in delivery of mail to United States Government offices, it is requested that copies be transmitted either by means of facsimile transmission to 301–415–3725 or by e-mail to *OGCMailCenter@nrc.gov.* A copy of the request for hearing and petition for leave to intervene should also be sent to the attorney for the licensee.

Nontimely filings of petitions for leave to intervene, amended petitions, supplemental petitions and/or requests for a hearing will not be entertained absent a determination by the Commission, the presiding officer or the Atomic Safety and Licensing Board that the petition and/or request should be granted based upon a balancing of factors specified in 10 CFR 2.714(a)(1)(i)–(v) and 2.714(d).

[1] The most recent version of Title 10 of the Code of Federal Regulations, published January 1, 2002, inadvertently omitted the last sentence of 10 CFR 2.714(d) and subparagraphs (d)(1) and (2), regarding petitions to intervene and contentions. Those provisions are extant and still applicable to petitions to intervene. Those provisions are as follows: ''In all other circumstances, such ruling body or officer shall, in ruling on—

(1) A petition for leave to intervene or a request for hearing, consider the following factors, among other things:

(i) The nature of the petitioner's right under the Act to be made a party to the proceeding.

(ii) The nature and extent of the petitioner's property, financial, or other interest in the proceeding.

(iii) The possible effect of any order that may be entered in the proceeding on the petitioner's interest .

(2) The admissibility of a contention, refuse to admit a contention if:

(i) The contention and supporting material fail to satisfy the requirements of paragraph (b)(2) of this section; or

(ii) The contention, if proven, would be of no consequence in the proceeding because it would not entitle petitioner to relief.''

For further details with respect to this action, see the application for amendment which is available for public inspection at the Commission's PDR, located at One White Flint North, 11555 Rockville Pike (first floor), Rockville, Maryland. Publicly available records will be accessible from the Agencywide Documents Access and Management System's (ADAMS) Public Electronic Reading Room on the Internet at the NRC Web site, *http://www.nrc.gov/reading-rm/adams.html.* If you do not have access to ADAMS or if there are problems in accessing the documents located in ADAMS, contact the NRC PDR Reference staff at 1–800–397–4209, 304–415–4737 or by e-mail to *pdr@nrc.gov.*

AmerGen Energy Company, LLC, Docket No. 50–219, Oyster Creek Nuclear Generating Station, Ocean County, New York

Date of amendment request: June 26, 2002.

Description of amendment request: The licensee proposed to amend the Oyster Creek Nuclear Generating Station (OCNGS) Technical Specifications (TSs) regarding the safety limit minimum critical power ratio (SLMCPR) to reflect the results of cycle-specific calculations performed for the next fuel cycle (i.e., Cycle 19), using Nuclear Regulatory Commission (NRC)-approved methodology for determining SLMCPR values. Specifically, the licensee proposed to revise TS 2.1.A, changing the SLMCPR from 1.09 to 1.12 for three-recirculation-loop operation, and to 1.11 for four-or five-recirculation-loop operation. The proposed amendment would also editorially revise references to topical reports which document the approved methodology, and make editorial corrections to the TSs.

Basis for proposed no significant hazards consideration determination: As required by 10 CFR 50.91(a), the licensee has provided its analysis of the issue of no significant hazards consideration. The NRC staff has reviewed the licensee's analysis against the standards of 10 CFR 50.92(c). The NRC staff's analysis is presented below:

1. Does the proposed change involve a significant increase in the probability or consequences of an accident previously evaluated?

The licensee used NRC-approved methods and procedures in Topical Report NEDE–24011–P–A–14, ''General Electric Standard Application for Reactor Fuel'' (GESTAR II) and U.S. Supplement, NEDE–24011–P–A–14–US, dated June 2000, to derive the SLMCPR values for OCNGS, Cycle 19. The analysis methodology incorporates cycle-specific parameters. These calculations do not change the operating procedures of OCNGS and have no effect on the probability of an accident initiating event or transient. The basis of the SLMCPR is to ensure no mechanistic fuel damage is calculated to occur if the limit is not violated. The new SLMCPR values preserve the existing margin to transition boiling and the probability of fuel damage is not increased (*i.e.,* in the event of an accident or transient, the amount of fuel damaged would not be increased as a result of the new SLMCPR values). Furthermore, the proposed new SLMCPR values do not lead to, nor do they arise as a result of, plant design or procedural changes. The balance of the changes is purely administrative. Therefore, the proposed changes do not involve a significant increase in the probability or consequences of an accident previously evaluated.

2. Does the proposed change create the possibility of a new or different kind of accident from any accident previously evaluated?

The new SLMCPR values for OCNGS Cycle 19 core have been calculated in accordance with the methods and procedures described in NRC-approved topical reports. The proposed new SLMCPR values do not lead to, nor do they arise as a result of, plant design or procedural changes. The balance of the changes is purely administrative. The changes do not involve any new method for operating the facility and do not involve any facility modifications. As a result, no new initiating events or transients could develop from the proposed changes. Therefore, the proposed TS changes do not create the possibility of a new or different kind of accident from any accident previously evaluated.

3. Does the proposed change involve a significant reduction in a margin of safety?

The margin of safety as defined in OCNGS's licensing basis will remain the same. The new, cycle-specific SLMCPR values are calculated using NRC-approved methods and procedures that are in accordance with the current fuel design and licensing criteria. The SLMCPR values will remain high enough to ensure that greater than 99.9% of all fuel rods in the core are expected to avoid transition boiling if the limits are not violated, thereby preserving the fuel cladding integrity. Therefore, the proposed TS changes do not involve a significant reduction in a margin of safety.

Based on the above review, it appears that the three standards of 10 CFR 50.92(c) are satisfied. Therefore, the NRC staff proposes to determine that the requested amendment involves no significant hazards consideration.

Attorney for licensee: Kevin P. Gallen, Morgan, Lewis & Bockius, LLP, 1800 M Street, NW., Washington, DC 20036–5869.

NRC Section Chief: Richard J. Laufer.

Carolina Power & Light Company, et al., Docket Nos. 50–325 and 50–324, Brunswick Steam Electric Plant (BSEP), Units 1 and 2, Brunswick County, North Carolina

Date of amendments request: June 26, 2002.

Description of amendments request: The proposed amendment would revise the Technical Specifications (TS) to revise the reactor coolant system pressure-temperature limit curves for operation to 32 effective full-power years (EFPY).

Basis for proposed no significant hazards consideration determination: As required by 10 CFR 50.91(a), the licensee has provided its analysis of the issue of no significant hazards consideration, which is presented below:

1. The proposed license amendments do not involve a significant increase in the probability or consequences of an accident previously evaluated. Development of the revised BSEP, Unit 1 and 2 pressure-temperature limits was performed using the approved fracture toughness methodologies of 10 CFR 50, Appendix G; the American Society of Mechanical Engineers (ASME) Boiler and Pressure Vessel Code, Section XI, Appendix G; and ASME Code Case N–640, ''Alternative Reference Fracture Toughness for Development of P–T Limit Curves for ASME Section XI, Division 1.'' The revised pressure-temperature limits were also developed using NRC Regulatory Guide 1.190, ''Calculational and Dosimetry Methods for Determining Pressure Vessel Neutron Fluence,'' March 2001, for evaluating neutron fluence and NRC Regulatory Guide 1.99, Revision 2, ''Radiation Embrittlement of Reactor Vessel Materials,'' for evaluating predicted irradiation effects on vessel beltline materials. Use of these methods provides compliance with the intent of 10 CFR 50, Appendix G, and provides adequate protection against nonductile-type fractures of the reactor pressure vessel. Therefore, the probability of occurrence of a previously analyzed event is not significantly increased.

The consequences of a previously evaluated accident are dependent on the initial conditions assumed for the analysis, the behavior of the fuel during the accident, the availability and successful functioning of the equipment assumed to operate in response to the accident, and the setpoints at which these actions are initiated. The proposed revisions do not impact the source term or pathways assumed in accidents previously evaluated. No analysis assumptions are violated, and there are no adverse effects on the factors contributing to offsite and onsite dose. The proposed changes to the pressure-temperature limits curves do not affect the performance of any equipment used to mitigate the consequences of a previously evaluated accident. Also, the proposed changes do not affect setpoints that initiate protective or mitigative actions. Based on the above, the proposed changes to the pressure-temperature limits curves do not significantly increase the consequences of a previously evaluated accident.

2. The proposed license amendments will not create the possibility of a new or different kind of accident from any accident previously evaluated.

The changes extend the pressure-temperature limits for use up to 32 EFPY of

operation while providing adequate protection against a nonductile-type fracture of the reactor pressure vessel. Creation of the possibility of a new or different kind of accident would require the creation of one or more new precursors of that accident. New accident precursors may be created by modifications of the plant configuration, including changes in allowable modes of operation. This proposed license amendment does not involve any facility modifications, and plant equipment will not be operated in a different manner. Also, no new initiating events or transients result from the pressure-temperature limits curves changes. As a result, no new failure modes are being introduced. Therefore, the proposed changes to the pressure-temperature limits curves will not create the possibility of a new or different kind of accident from any accident previously evaluated.

3. The proposed license amendments do not involve a significant reduction in a margin of safety.

The margin of safety is established through the design of the plant structures, systems, and components; through the parameters within which the plant is operated; through the establishment of setpoints for actuation of equipment relied upon to respond to an event; and through margins contained within the safety analyses. The proposed changes to the pressure-temperature limit curves do not adversely impact the performance of plant structures, systems, components, and setpoints relied upon to respond to mitigate an accident. The revised pressure-temperature limits were developed using the approved fracture toughness methodologies of 10 CFR 50, Appendix G; the American Society of Mechanical Engineers (ASME) Boiler and Pressure Vessel Code, Section XI, Appendix G; and ASME Code Case N–640, ''Alternative Reference Fracture Toughness for Development of P–T Limit Curves for ASME Section XI, Division 1.'' The proposed changes are acceptable because the ASME guidance maintains the relative margin of safety commensurate with that which existed at the time that the ASME Boiler and Pressure Vessel Code, Section XI, Appendix G, was approved in 1974. In addition, the revised pressure-temperature limits were also developed using NRC Regulatory Guide 1.190, ''Calculational and Dosimetry Methods for Determining Pressure Vessel Neutron Fluence,'' March 2001, for evaluating neutron fluence and NRC Regulatory Guide 1.99, Revision 2, ''Radiation Embrittlement of Reactor Vessel Materials'' for evaluating predicted irradiation effects on vessel beltline materials. Use of these methods has provided revised pressure-temperature limit curves that will ensure that the reactor pressure vessel materials continue to behave in a non-brittle manner, thereby preserving the original safety design bases[.] No plant safety limits, setpoints, or design parameters are adversely affected by the proposed changes to the pressure-temperature limit curves. Therefore, the proposed changes do not involve a significant reduction in a margin of safety.

The NRC staff has reviewed the licensee's analysis and, based on this review, it appears that the three standards of 10 CFR 50.92(c) are satisfied. Therefore, the NRC staff proposes to determine that the amendment request involves no significant hazards consideration.

Attorney for licensee: William D. Johnson, Vice President and Corporate Secretary, Carolina Power & Light Company, Post Office Box 1551, Raleigh, North Carolina 27602.

NRC Section Chief: Kahtan Jabbour, Acting.

Carolina Power & Light Company, et al., Docket Nos. 50–325 and 50–324, Brunswick Steam Electric Plant (BSEP), Units 1 and 2, Brunswick County, North Carolina

Date of amendments request: July 2, 2002.

Description of amendments request: The proposed amendments would revise the Technical Specifications (TS) to change the administrative controls of TS 5.7, ''High Radiation Area.'' The proposed changes would be consistent with the guidance of Regulatory Guide 8.38, ''Control of Access to High and Very High Radiation Areas in Nuclear Power Plants,'' Section C, Regulatory Position 2.4, Alternative Methods for Access Control, with the exception that ''should'' would be changed to ''shall.''

Basis for proposed no significant hazards consideration determination: As required by 10 CFR 50.91(a), the licensee has provided its analysis of the issue of no significant hazards consideration, which is presented below:

1. The proposed license amendments do not involve a significant increase in the probability or consequences of an accident previously evaluated.

The changes are administrative and affect personnel access control requirements for high radiation areas. The changes do not affect the operation, physical configuration, or function of plant equipment or systems. The changes do not impact the initiators or assumptions of analyzed events; nor do they impact the mitigation of accidents or transient events. Therefore, these changes do not increase the probability or consequences of an accident previously evaluated.

2. The proposed license amendments will not create the possibility of a new or different kind of accident from any accident previously evaluated.

The changes are administrative and affect personnel access control requirements for high radiation areas. The changes do not alter plant configuration, require installation of new equipment, alter assumptions about previously analyzed accidents, or impact the operation or function of plant equipment or systems. Therefore, these changes will not create the possibility of a new or different kind of accident from any accident previously evaluated.

3. The proposed license amendments do not involve a significant reduction in a margin of safety.

The changes are administrative and affect personnel access control requirements for high radiation areas. The changes do not impact any safety assumptions; nor do the changes have the potential to reduce any margin of safety as described in the BSEP TS Bases. The proposed changes maintain an equivalent level of protection for radiation workers and, thereby, provide reasonable assurance that individuals will not exceed regulatory dose limits. The proposed changes are consistent with: (1) the guidance of Regulatory Guide (RG) 8.38, ''Control of Access to High and Very High Radiation Areas in Nuclear Power Plants,'' Section C, Regulatory Position 2.4, Alternative Methods for Access Control, with the exception that ''should'' has been changed to ''shall''; (2) the BSEP TSs prior to conversion to Improved Standard Technical Specifications; and (3) other nuclear plants' existing TSs, including the Crystal River, H. B. Robinson, and Shearon Harris nuclear plants.

The NRC staff has reviewed the licensee's analysis and, based on this review, it appears that the three standards of 10 CFR 50.92(c) are satisfied. Therefore, the NRC staff proposes to determine that the amendment request involves no significant hazards consideration.

Attorney for licensee: William D. Johnson, Vice President and Corporate Secretary, Carolina Power & Light Company, Post Office Box 1551, Raleigh, North Carolina 27602.

NRC Section Chief: Kahtan Jabbour, Acting.

Carolina Power & Light Company, et al., Docket No. 50–400, Shearon Harris Nuclear Power Plant, Unit 1, Wake and Chatham Counties, North Carolina

Date of amendment request: July 8, 2002.

Description of amendment request: The amendment would revise Technical Specification (TS) 3/4.8.1.1, ''Electrical Power Systems—A.C. Sources—Operating'' and TS 3/4.8.1.2, ''Electrical Power Systems—A.C. Sources—Shutdown'' by revising the minimum level to a volume-based indication versus a level-based indication.

Basis for proposed no significant hazards consideration determination: As required by 10 CFR 50.91(a), the licensee has provided its analysis of the issue of no significant hazards consideration, which is presented below:

1. The proposed amendment does not involve a significant increase in the probability or consequences of an accident previously evaluated.

The Harris Nuclear Plant (HNP) Technical Specification (TS) Bases for Electrical Power Systems—A. C. Systems states that; ''A

separate day tank containing a minimum of 1457 gallons of fuel, which is equivalent to a minimum indicated level of 40% * * *'' and, the asterisked note states; * * * Minimum indicated level with a fuel oil specific gravity of 0.83 and the level instrumentation calibrated to a reference specific gravity of 0.876.'' These changes do not modify the design or operation of Structures, Systems, and Components (SSCs) that could initiate an accident. The minimum volume of fuel in the day tank is unchanged by this amendment and consequently would not impact the probability or consequences of any accident scenario.

2. The proposed amendment does not create the possibility of a new or different kind of accident from any accident previously evaluated.

The proposed changes do not involve new plant components or procedures, but only revise existing Technical Specification Limiting Condition for Operation Requirements. No significant impact on any postulated accident is made due to this change since the required fuel oil volume is not changed and the level indication for the operations personnel is not changed. These changes do not modify the design or operation of Structures, Systems, and Components (SSCs) that could initiate an accident.

Therefore, the proposed change does not create the possibility of a new or different kind of accident from any accident previously evaluated.

3. The proposed amendment does not involve a significant reduction in the margin of safety.

The proposed changes do not affect the design or operation of safety related components relied upon to automatically mitigate the consequences of a design basis event. The day tank level specified in TS is not accurate for all fuel oil specific gravities so these changes provide better monitoring capability by reducing the possibility of confusion. Indicated day tank level is used to determine volume by comparing the indicated level to the day tank curve using the actual specific gravity of the fuel. The Diesel Generator day tank minimum volume is not altered by these changes and therefore there * * * is no significant impact on any safety system and these changes do not reduce the margin of safety.

Based on these considerations, the proposed change does not involve a significant reduction in the margin of safety.

The NRC staff has reviewed the licensee's analysis and, based on this review, it appears that the three standards of 10 CFR 50.92(c) are satisfied. Therefore, the NRC staff proposes to determine that the amendment request involves no significant hazards consideration.

Attorney for licensee: William D. Johnson, Vice President and Corporate Secretary, Carolina Power & Light Company, Post Office Box 1551, Raleigh, North Carolina 27602.

NRC Section Chief: Kahtan N. Jabbour, Acting.

Duke Energy Corporation, Docket Nos. 50–269, 50–270, and 50–287, Oconee Nuclear Station, Units 1, 2, and 3, Oconee County, South Carolina

Date of amendment request: July 11, 2002.

Description of amendment request: The proposed amendments would revise the Technical Specifications to make several administrative changes.

Basis for proposed no significant hazards consideration determination: As required by 10 CFR 50.91(a), the licensee has provided its analysis of the issue of no significant hazards consideration, which is presented below:

First Standard

Would implementation of this amendment involve a significant increase in the probability or consequences of an accident previously evaluated?

No. This license amendment request makes editorial corrections to several Oconee Technical Specifications. These corrections are solely administrative in nature. The deletion of the Reactor Building Engineered Safeguards Channels, as proposed in the change to the Technical Specification 3.3.6, Engineered Safeguards Protective System Manual Initiation, was investigated through Duke's corrective action program and also confirmed to be administrative in nature. Therefore, all the changes contained in this license amendment request are administrative in nature and have no impact on any accident probabilities or consequences.

Second Standard

Would implementation of this amendment create the possibility of a new or different kind of accident from any accident previously evaluated?

No. There are no new accident causal mechanisms created as a result of the implementation of this license amendment request. No changes are being made to the plant which will introduce any new accident causal mechanisms. This amendment request only makes administrative changes and does not impact any plant systems that are accident initiators; therefore, no new accident types are being created.

Third Standard

Would implementation of this statement involve a significant reduction in a margin of safety?

No. Margin of safety is related to the confidence in the ability of the fission product barriers to perform their design functions during and following an accident situation. The changes proposed in this license amendment request are administrative in nature and do not affect the performance of the barriers. Consequently, no safety margins will be impacted.

The NRC staff has reviewed the licensee's analysis and, based on this review, it appears that the three standards of 10 CFR 50.92(c) are satisfied. Therefore, the NRC staff proposes to determine that the amendment request involves no significant hazards consideration.

Attorney for licensee: Anne W. Cottington, Winston and Strawn, 1200 17th Street, NW., Washington, DC 20005.

NRC Section Chief: John A. Nakoski.

Energy Northwest, Docket No. 50–397, Columbia Generating Station, Benton County, Washington

Date of amendment request: January 10, 2002.

Description of amendment request: Energy Northwest is requesting changes to the technical specifications (TS) to reflect the application of a 24-month surveillance test interval (STI) to coincide with its intention to implement a 24-month fuel cycle.

Basis for proposed no significant hazards consideration determination: As required by 10 CFR 50.91(a), the licensee has provided its analysis of the issue of no significant hazards consideration, which is presented below:

1. The proposed change does not involve a significant increase in the probability or consequences of an accident previously evaluated.

The extension of the intervals to 24 months for the subject SRs [surveillance requirements] does not impact the ability of any of the equipment to function as assumed in the Columbia Generating Station accident analysis. None of the equipment within the scope of analysis for this TS amendment request performs a function in any of the systems required for safe shutdown as described in section 7.4 of the Columbia Generating Station FSAR [Final Safety Analysis Report]. Historical maintenance and surveillance data as well as projected instrument drift indicate the proposed amendment will not affect performance or reliability of the equipment tested to meet the requirements of these SRs. Therefore, the extension of the surveillance intervals does not involve a significant increase in the probability or consequences of an accident previously evaluated.

2. The proposed change does not create the possibility of a new or different kind of accident from any accident previously evaluated.

An event related to surveillance testing Frequency or instruments drifting beyond Allowable Values is not postulated in the Columbia Generating Station accident analysis. None of the analyses performed for this amendment request indicate an increase in the probability of equipment failure resulting from the surveillance interval extension. Because all of the equipment related to the proposed SR interval extensions is expected to function normally during the longer intervals, extending the subject SRs does not introduce any new accident initiators.

Therefore, the operation of Columbia Generating Station in accordance with the

proposed amendment will not create the possibility of a new or different kind of accident from any accident previously evaluated.

3. The proposed change does not involve a significant reduction in a margin of safety.

The proposed amendment to the Technical Specifications will extend the intervals at which testing is performed to meet the requirements of the selected SRs. The overall effect of the extensions on safety is small due to other more frequent testing that is performed on the same equipment, projected instrument drift that is bounded by the current setpoint analysis, or the existence of redundant mechanical or electrical components. Reviews of historical surveillance and maintenance records indicate there is no evidence of time-related failures. The proposed amendment does not impact the performance of any system, structure, or component relied upon for accident mitigation. The proposed surveillance interval extensions do not impact any safety analysis assumptions or results.

Therefore, operation of Columbia Generating Station in accordance with the proposed amendment will not involve a significant reduction in the margin of safety.

The NRC staff has reviewed the licensee's analysis and, based on this review, it appears that the three standards of 10 CFR 50.92(c) are satisfied. Therefore, the NRC staff proposes to determine that the amendment request involves no significant hazards consideration.

Attorney for licensee: Thomas C. Poindexter, Esq., Winston & Strawn, 1400 L Street, NW., Washington, DC 20005–3502.

NRC Section Chief: Stephen Dembek.

Entergy Nuclear Operations, Inc., Docket No. 50–286, Indian Point Nuclear Generating Unit No. 3, Westchester County, New York

Date of amendment request: June 24, 2002.

Description of amendment request: The proposed amendment would revise Technical Specification (TS) surveillance requirements (SR) 3.7.7.1 and SR 3.7.7.2. Specifically, SR 3.7.7.1 would be changed to require the verification of the city water tank volume rather than city water header pressure and increase the SR frequency from 12 hours to 24 hours. SR 3.7.7.2 would be revised to require all city water header isolation valves are open rather than only the one header supply isolation valve.

Basis for proposed no significant hazards consideration determination: As required by 10 CFR 50.91(a), the licensee has provided its analysis of the issue of no significant hazards consideration, which is presented below:

1. Does the proposed license amendment involve a significant increase in the probability or consequences of an accident previously evaluated?

Response: No.

The current TS surveillance to verify City Water (CW) header pressure did not provide assurance that adequate volume of water was available in the City Water Tank (CWT) as an alternate source of cooling if Condensate Storage Tank (CST) was not available. The CST is not designed to withstand the effect of a tornado-generated missile. However, the Auxiliary Feedwater System (AFS) is provided sufficient redundancy of water supplies such that an alternate source of water from the CWT is available in the event the CST is damaged by a tornado-generated missile. The proposed amendment to verify CWT volume is ≥360,000 gallons would ensure that adequate volume of CW is available in the CWT to cool the RCS [reactor coolant system] from 102% rated thermal power to RHR [residual heat removal] entry conditions in 10 hours, if the CST is unavailable or depleted for any reason. The surveillance frequency for the CWT volume is 24 hours. The proposed amendment to change SR 3.7.7.2 to include additional isolation valves that are in the flow path from CWT to AFS suction would ensure that all applicable isolation valves in the flow path are properly positioned. Thus, the proposed amendment involves changes to the Technical Specifications that would properly reflect the Surveillance Requirements for CWT. The CWT is not an initiator of any accident addressed in the FSAR [Final Safety Analysis Report] and the proposed amendment does not have any change to the accident analysis addressed in the FSAR.

Therefore, the proposed amendment does not involve a significant increase in the probability or consequences of an accident previously evaluated.

2. Does the proposed license amendment create the possibility of a new or different kind of accident from any accident previously evaluated?

Response: No.

The proposed amendment involves changes to the Technical Specifications to properly reflect the surveillance requirements of City Water Tank. The proposed change provides assurance of availability of adequate volume of water in the CWT to cool the RCS from 102% rated thermal power to RHR entry conditions in 10 hours, if the CST is unavailable or depleted for any reason, and verifies the correct position of isolation valves in the flow path between the CWT and the AFS pump suction. These changes do not affect any accident initiators.

Therefore, the proposed amendment does not create the possibility of a new or different kind of accident from any accident previously evaluated.

3. Does the proposed license amendment involve a significant reduction in a margin of safety?

Response: No.

The proposed amendment involves changes to the Technical Specifications to properly reflect the surveillance requirements of City Water Tank. The proposed change to verify the CWT volume would ensure that an adequate volume of CW is available in the tank to cool the RCS from 102% rated thermal power to RHR entry conditions in 10 hours, if the CST is unavailable or depleted for any reason. The proposed change to verify the valve position for isolation valves in the flow path between the CWT and the AFS pump suction would ensure that isolation valves in the flow path are properly positioned. The proposed amendment does not involve any changes to plant equipment, or the way in which the plant is operated.

Therefore, the proposed amendment does not involve a significant reduction in a margin of safety.

The NRC staff has reviewed the licensee's analysis and, based on this review, it appears that the three standards of 10 CFR 50.92(c) are satisfied. Therefore, the NRC staff proposes to determine that the amendment request involves no significant hazards consideration.

Attorney for licensee: Mr. John Fulton, Assistant General Counsel, Entergy Nuclear Operations, Inc., 440 Hamilton Avenue, White Plains, NY 10601.

NRC Section Chief: Richard J. Laufer.

Entergy Nuclear Operations, Inc., Docket No. 50–286, Indian Point Nuclear Generating Unit No. 3, Westchester County, New York

Date of amendment request: June 26, 2002.

Description of amendment request: The proposed amendment would revise Technical Specification (TS) 5.6.5.b, ''Core Operating Limits Report (COLR),'' to incorporate the reference to Westinghouse topical report WCAP–12945–P–A, ''Code Qualification Document for Best Estimate Loss-of-Coolant Analysis [LOCA],'' dated March 1998. The proposed amendment would also allow the use of the analytical methodology to determine the core operating limits.

Basis for proposed no significant hazards consideration determination: As required by 10 CFR 50.91(a), the licensee has provided its analysis of the issue of no significant hazards consideration, which is presented below:

1. Does the proposed change involve a significant increase in the probability or consequences of an accident previously evaluated?

Response: No.

No physical changes are being made by this change. The proposed changes involve use of the Best Estimate Large Break LOCA [loss-of-coolant accident] analysis methodology and associated TS [technical specification] changes. The plant conditions assumed in the analysis are bounded by the design conditions for all equipment in the plant. Therefore, there will be no increase in

the probability of a loss of coolant accident. The consequences of a LOCA are not being increased. That is, it is shown that the emergency core cooling system is designed so that its calculated cooling performance conforms to the criteria contained in 10 CFR 50.46 paragraph b, that is it meets the five criteria listed in Section II of this evaluation. No other accident is potentially affected by this change.

Therefore, the proposed change does not involve a significant increase in the probability or consequences of an accident previously evaluated.

2. Does the proposed change create the possibility of a new or different kind of accident from any previously analyzed?

Response: No.

There are no physical changes being made to the plant. No new modes of plant operation are being introduced. The parameters assumed in the analysis are within the design limits of existing plant equipment. All plant systems will perform equally during the response to a potential accident.

Therefore, the proposed change does not create the possibility of a new or different kind of accident from any accident previously evaluated.

3. Does the proposed change involve a significant reduction in the margin of safety?

Response: No.

It has been shown that the analytic technique used in the analysis more realistically describes the expected behavior of the Indian Point 3 reactor system during a postulated loss of coolant accident. Uncertainties have been accounted for as required by 10 CFR 50.46. A sufficient number of loss of coolant accidents with different break sizes, different locations and other variations in properties have been analyzed to provide assurance that the most severe postulated loss of coolant accidents were calculated. It has been shown by the analysis that there is a high level of probability that all criteria contained in 10 CFR 50.46 paragraph b) are met.

The NRC staff has reviewed the licensee's analysis and, based on this review, it appears that the three standards of 10 CFR 50.92(c) are satisfied. Therefore, the NRC staff proposes to determine that the amendment request involves no significant hazards consideration.

Attorney for licensee: Mr. John Fulton, Assistant General Counsel, Entergy Nuclear Operations, Inc., 440 Hamilton Avenue, White Plains, NY 10601.

NRC Section Chief: Richard J. Laufer.

Exelon Generation Company, LLC, Docket Nos. 50–352 and 50–353, Limerick Generating Station, Units 1 and 2, Montgomery County, Pennsylvania

Date of amendment request: June 26, 2002.

Description of amendment request: Extend the use of the pressure-temperature (P–T) limits in Technical Specification (TS) Figure 3.4.6.1–1 to 32 effective full power years by deleting a note on each unit's TS Figure limiting the validity of the Figure.

Basis for proposed no significant hazards consideration determination: As required by 10 CFR 50.91(a), the licensee has provided its analysis of the issue of no significant hazards consideration, which is presented below:

1. Does the proposed change involve a significant increase in the probability or consequences of an accident previously evaluated?

No. The proposed change to the technical specifications to extend the use of the existing pressure-temperature (P-T) limits does not affect the operation or configuration of any plant equipment. Thus, no new accident initiators are created by this change. The existing P-T limits are based on the projected reactor vessel neutron fluence at 32 effective full power years (EFPY) of operation specified in the current licensing basis for LGS [Limerick Generating Station], Units 1 and 2. A plant-specific calculation of reactor vessel 32 EFPY fast neutron fluence has been completed for LGS, Units 1 and 2, using the methodology described in a General Electric (GE) Company Licensing Topical Report (LTR), which adheres to the guidance in Regulatory Guide 1.190, ''Calculational and Dosimetry Methods for Determining Pressure Vessel Neutron Fluence.'' The three-dimensional spatial distribution of neutron flux was modeled by combining the results of two separate two-dimensional neutron transport calculations. The latest available cross section libraries for the important components of Boiling Water Reactor (BWR) neutron flux calculations, i.e., oxygen, hydrogen and individual iron isotopes, were included. The resulting reactor vessel fast neutron fluence value is lower than the value in the current licensing basis for LGS, Units 1 and 2. Therefore, the existing 32 EFPY P-T limits bound the fast neutron fluence value calculated using the GE methodology. This provides sufficient assurance that the LGS, Unit 1 and Unit 2, reactor vessels will be operated in a manner that will protect them from brittle fracture under all operating conditions. Therefore, the proposed change does not involve a significant increase in the probability or consequences of an accident previously evaluated.

2. Does the proposed change create the possibility of a new or different kind of accident from any accident previously evaluated?

No. The proposed change to the technical specifications to extend the use of the existing P–T limits does not affect the operation or configuration of any plant equipment. The current P–T limits will remain valid and conservative during the proposed extension. Therefore, the proposed changes do not create the possibility of a new or different kind of accident from any previously evaluated.

3. Does the proposed change involve a significant reduction in a margin of safety?

No. The proposed change extends the use of the existing P–T limits. The existing P–T limits are based on the projected reactor vessel neutron fluence at 32 EFPY of operation specified in the current licensing basis for LGS, Units 1 and 2. A plant-specific calculation of reactor vessel 32 EFPY fast neutron fluence has been completed for LGS, Units1 and 2, using the NRC [Nuclear Regulatory Commission] approved methodology in a GE LTR, which adheres to the guidance in Regulatory Guide 1.190. The three-dimensional spatial distribution of neutron flux was modeled by combining the results of two separate two-dimensional neutron transport calculations. The latest available cross section libraries for the important components of BWR neutron flux calculations, i.e., oxygen, hydrogen and individual iron isotopes, were included. The resulting reactor vessel fast neutron fluence value is lower than the value in the current licensing basis for LGS, Units 1 and 2. Therefore, the existing 32 EFPY P–T limits bound the fast neutron fluence value calculated using the GE methodology. This provides sufficient margin such that the LGS, Unit 1 and Unit 2, reactor vessels will be operated in a manner that will protect them from brittle fracture under all operating conditions. Therefore, the proposed change does not involve a significant reduction in the margin of safety.

The NRC staff has reviewed the licensee's analysis and, based on this review, it appears that the three standards of 10 CFR 50.92(c) are satisfied. Therefore, the NRC staff proposes to determine that the amendment request involves no significant hazards consideration.

Attorney for licensee: Mr. Edward Cullen, Vice President & General Counsel, Exelon Generation Company, LLC, 300 Exelon Way, Kennett Square, PA 19348.

NRC Acting Section Chief: Jacob I. Zimmerman.

Exelon Generation Company, LLC, and PSEG Nuclear LLC, Docket No. 50–277, Peach Bottom Atomic Power Station, Unit 2, York County, Pennsylvania

Date of application for amendment: June 10, 2002

Description of amendment request: Exelon Generation Company, LLC, the licensee, is proposing a change to the Peach Bottom Atomic Power Station (PBAPS), Unit 2, Technical Specifications (TSs) contained in Appendix A to the Operating License. This proposed change will revise the TS section on safety limits to incorporate revised safety limit minimum critical power ratios (SLMCPRs) due to the cycle-specific analysis performed by Global Nuclear Fuel for PBAPS, Unit 2, Cycle 15.

Basis for proposed no significant hazards consideration determination: As required by 10 CFR 50.91(a), the licensee has provided its analysis of the

issue of no significant hazards consideration, which is presented below:

1. The proposed TS change does not involve a significant increase in the probability or consequences of an accident previously evaluated.

The derivation of the cycle specific safety limit minimum critical power ratios (SLMCPRs) for incorporation into the (TS[s]), and their use to determine cycle specific thermal limits, has been performed using the methodology discussed in ''General Electric Standard Application for Reactor Fuel,'' NEDE–24011–P–A–14 (GESTAR–II), and U.S. Supplement, NEDE–24011–P–A–14–US, June, 2000, which incorporates Amendment 25. Amendment 25 was approved by the NRC in a March 11, 1999 safety evaluation report.

The basis of the SLMCPR calculation is to ensure that greater than 99.9% of all fuel rods in the core avoid transition boiling if the limit is not violated. The new SLMCPRs preserve the existing margin to transition boiling. The GE–14 fuel is in compliance with Amendment 22 to ''General Electric Standard Application for Reactor Fuel,'' NEDE–24011–P–A–14 (GESTAR–II), and U.S. Supplement, NEDE–24011–P–A–14–US, June, 2000, which provides the fuel licensing acceptance criteria. The probability of fuel damage will not be increased as a result of this change. Therefore, the proposed TS change does not involve a significant increase in the probability or consequences of an accident previously evaluated.

2. The proposed TS change does not create the possibility of a new or different kind of accident from any accident previously evaluated.

The SLMCPR is a TS numerical value, calculated to ensure that transition boiling does not occur in 99.9% of all fuel rods in the core if the limit is not violated. The new SLMCPRs are calculated using NRC approved methodology discussed in ''General Electric Standard Application for Reactor Fuel,'' NEDE–24011–P–A–14 (GESTAR–II), and U.S. Supplement, NEDE–24011–P–A–14–US, June, 2000, which incorporates Amendment 25. Additionally, the GE–14 fuel is in compliance with Amendment 22 to ''General Electric Standard Application for Reactor Fuel,'' NEDE–24011–P–A–14 (GESTAR–II), and U. S. Supplement, NEDE–24011–P–A–14–US, June, 2000, which provides the fuel licensing acceptance criteria. The SLMCPR is not an accident initiator, and its revision will not create the possibility of a new or different kind of accident from any accident previously evaluated.

3. The proposed TS change does not involve a significant reduction in a margin of safety.

There is no significant reduction in the margin of safety previously approved by the NRC as a result of the proposed change to the SLMCPRs, which includes the use of GE–14 fuel. The new SLMCPRs are calculated using methodology discussed in ''General Electric Standard Application for Reactor Fuel,'' NEDE–24011–P–A–14 (GESTAR–II), and U.S. Supplement, NEDE–24011–P–A–14–US, June, 2000, which incorporates Amendment 25. The SLMCPRs ensure that greater than 99.9% of all fuel rods in the core will avoid transition boiling if the limit is not violated when all uncertainties are considered, thereby preserving the fuel cladding integrity. Therefore, the proposed TS change will not involve a significant reduction in the margin of safety previously approved by the NRC.

Based on the above, Exelon Generation Company, LLC, concludes that the proposed amendment presents no significant hazards consideration under the standards set forth in 10 CFR 50.92(c), and, accordingly, a finding of ''no significant hazards consideration'' is justified.

The NRC staff has reviewed the licensee's analysis and, based on this review, it appears that the three standards of 10 CFR 50.92(c) are satisfied. Therefore, the NRC staff proposes to determine that the amendment request involves no significant hazards consideration.

Attorney for Licensee: Mr. Edward Cullen, Vice President and General Counsel, Exelon Generation Company, LLC, 300 Exelon Way, Kennett Square, PA 19348.

NRC Section Chief: Jacob I. Zimmerman, Acting.

Florida Power and Light Company, et al., Docket Nos. 50–335 and 50–389, St. Lucie Plant, Unit Nos. 1 and 2, St. Lucie County, Florida

Date of amendment request: July 18, 2002

Description of amendment request: The proposed amendments would implement an administrative change to relocate the Technical Specifications (TS) requirements for the spent fuel crane to the respective unit's Updated Final Safety Analysis Report (UFSAR).

Basis for proposed no significant hazards consideration determination: As required by 10 CFR 50.91(a), the licensee has provided its analysis of the issue of no significant hazards consideration, which is presented below:

1. Would operation of the facility in accordance with the proposed amendment involve a significant increase in the probability or consequences of an accident previously evaluated?

No. The proposed changes to the Technical Specifications are administrative in nature in that the Technical Specifications for operation and surveillance of the spent fuel cask crane and the fuel handling crane will be relocated from Appendix A of the facility operating license to the UFSAR for each unit. The crane operation and surveillance requirements are not altered by this relocation. Once relocated, any future changes will be controlled by 10 CFR 50.59, and the UFSARs will be updated pursuant to 10 CFR 50.71(e). Because no operating requirements are changed by the proposed amendment, crane operation following the proposed amendment would not differ from current crane operation. The proposed Technical Specification changes do not involve any change to the configuration or method of operation of any plant equipment that is used to mitigate the consequences of an accident, nor do the changes alter any assumptions or conditions in any of the plant accident analyses. Therefore, facility operation in accordance with the proposed amendment would not involve a significant increase in the probability or consequences of an accident previously evaluated in the UFSAR.

2. Would operation of the facility in accordance with the proposed amendment create the possibility of a new or different kind of accident from any accident previously evaluated?

No. The proposed amendment will not affect the design function of any system, structure, or component. Relocating the existing Technical Specification requirements for the spent fuel cask crane and the fuel handling crane to the UFSAR is an administrative change and will not modify the physical plant or the modes of plant operation defined in the Facility Operating License. The operating restrictions imposed on the spent fuel-related cranes by the existing Technical Specifications will be retained in the UFSAR under this change. The change does not involve the addition or modification of equipment, nor does it alter the design or operation of plant systems. Therefore, operation of the facility in accordance with the proposed amendment would not create the possibility of a new or different accident from any accident previously evaluated.

3. Would operation of the facility in accordance with the proposed amendment involve a significant reduction in a margin of safety?

No. The proposed changes to the Technical Specifications are administrative in nature in that the Technical Specifications for operation and surveillance of the spent fuel cask crane and the fuel handling crane will be relocated from Appendix A of the facility operating license to the UFSAR for each unit. The crane operating restrictions that are being relocated to the UFSAR by this change are not being relaxed or eliminated. The proposed changes do not alter the basis for any technical specification that is related to the establishment of or the maintenance of a nuclear safety margin. Therefore, operation of the facility in accordance with the proposed amendment will not involve a significant reduction in a margin of safety as defined in the basis for any Technical Specification or in any licensing document.

The NRC staff has reviewed the licensee's analysis and, based on this review, it appears that the three standards of 50.92(c) are satisfied. Therefore, the NRC staff proposes to determine that the amendment request involves no significant hazards consideration.

Attorney for licensee: M.S. Ross, Attorney, Florida Power & Light, P.O. Box 14000, Juno Beach, Florida 33408–0420.

NRC Section Chief: Kahtan N. Jabbour, Acting.

Florida Power Corporation, et al., Docket No. 50–302, Crystal River Unit No. 3 Nuclear Generating Plant, Citrus County, Florida

Date of amendment request: July 3, 2002.

Description of amendment request: The amendment would revise the Improved Technical Specifications (ITS) 3.8.1 and associated bases, ''AC Sources—Operating,'' by extending the allowed outage time for the emergency diesel generators (EDGs) from 72 hours to 14 days and to modify a note for two EDG ITS Surveillance Requirements (SRs).

Basis for proposed no significant hazards consideration determination: As required by 10 CFR 50.91(a), the licensee has provided its analysis of the issue of no significant hazards consideration, which is presented below:

(1) Does not involve a significant increase in the probability or consequences of an accident previously analyzed.

The proposed license amendment extends the Completion Time for restoring an inoperable EDG to OPERABLE status and permits performance of certain SRs at power under specified conditions. The EDGs are designed to supply backup AC power to equipment in essential safety systems in the event of a loss of offsite power, and as such, the EDGs are not initiators of any design basis accident.

The design functions, operational characteristics, and interfaces between the EDGs and other plant systems will not be affected by the change. In addition, the initial conditions and assumptions for accidents that require the EDGs will remain unchanged. Defense in depth will be maintained by the redundant OPERABLE EDG, diverse 1E offsite power sources, and the availability of multiple emergency feedwater (EFW) and auxiliary feedwater (AFW) equipment capable of operating independently of both offsite power and the EDGs.

A Probabilistic Safety Assessment (PSA) has been performed to quantitatively assess the risk impact of an increase in Completion Times. Although the proposed changes result in slight increases in core damage frequency (CDF) and incremental conditional core damage probability (ICCDP), and large early release frequency (LERF) and incremental conditional large early release probability (ICLERP), these increases are well below values that are considered risk significant in accordance with current regulatory guidance.

Based on the above, the proposed changes will not significantly increase the probability or consequences of an accident previously evaluated.

(2) Does not create the possibility of a new or different kind of accident from any accident previously analyzed.

The proposed amendment extends the Completion Time for restoring an inoperable EDG to OPERABLE status and permits performance of certain SRs at power under specified conditions. The proposed amendment will not result in changes to the design, physical configuration or operation of the plant or the assumptions made in the safety analysis for accidents that require the EDGs. In addition, the proposed amendment will not result in changes to corrective or preventive maintenance activities associated with the EDGs, plant operating procedures, or the procedures used to respond to abnormal or emergency conditions. Assumptions made in the safety analysis related to EDG availability will also remain unchanged. Performance of certain SRs at power requires an evaluation to assure plant safety is maintained or enhanced, which would include evaluation for new or different plant conditions. As such, no new failure modes are being introduced. Therefore, the proposed change will not create the possibility of a new or different kind of accident from any accident previously evaluated.

(3) Does not involve a significant reduction in the margin of safety.

The proposed license amendment increases the Completion Times for restoring an inoperable EDG to OPERABLE status and permits performance of certain SRs at power under specified conditions. The proposed changes will improve EDG reliability by providing flexibility in scheduling and performing EDG preventive and corrective maintenance activities. This flexibility will reduce the probability (and associated risk) of a plant shutdown to repair an inoperable EDG that cannot be restored within the current ITS 3.8.1 Completion Times. Performance of the proposed SRs at power requires an evaluation to assure plant safety is maintained or enhanced. The proposed change will also increase the availability of the EDGs during MODE 5 and 6 outages, thus reducing shutdown risk.

The proposed amendment will not change the plant design, safety analysis, or the design, configuration or operation of the EDGs. The EDGs are designed to supply backup AC power to equipment in essential safety systems in the event of a loss of offsite power. Either EDG is capable of performing this function; therefore, as long as one train is available, the margin of safety is maintained. Defense in depth will be provided by the redundant OPERABLE EDG, the availability of diverse offsite circuits capable of supplying power to plant emergency loads, and EFW and AFW equipment that can perform their design function independently of both offsite power and the EDGs.

To ensure these defense in depth capabilities are maintained during required EDG maintenance, maintenance and surveillance activities that have the ability to impact the availability of the redundant EDG, required support systems and/or backup systems, the EFW and AFW systems and the 1E offsite power circuits will be controlled in accordance with the normal work controls process. As part of this process, weekly qualitative and quantitative risk assessments of scheduled on-line maintenance activities, and additional risk assessments of emergent work activities, will be performed in accordance with the guidance provided in CR–3 Compliance Procedure CP–253, ''Power Operation Risk Assessment and Management.'' If the results of these assessments indicate an increase in risk, appropriate actions to control temporary and aggregate risk increases and minimize risk increases above the overall plant baseline will be implemented in accordance with CP–253.

Additional measures to minimize risk will include increased administrative controls related to switchyard access, and increased inspection of identified risk significant fire areas within the plant. A Tier 2 analysis has also been performed to identify the dominant risk significant plant configurations during the time that an EDG is inoperable due to required corrective or preventive maintenance, and appropriate configuration controls/restrictions will be established prior to extended EDG maintenance.

As discussed in question (1) above and in the submittal, the slight increases in CDF, ICCDP, LERF and ICLERP resulting from the proposed amendment are all below values that are considered risk significant in accordance with the guidance provided in Regulatory Guide 1.174, ''An Approach for Using Probabilistic Risk Assessment in Risk-Informed Decisions on Plant-Specific Changes to the Licensing Basis,'' for changes to the plant, and Regulatory Guide 1.177, ''An Approach for Plant-Specific, Risk-Informed Decisionmaking: Technical Specifications,'' for proposed increases in ITS Completion Times.

Based on the above, this proposed change does not involve a significant reduction in the margin of safety.

The NRC staff has reviewed the licensee's analysis and, based on this review, it appears that the three standards of 50.92(c) are satisfied. Therefore, the NRC staff proposes to determine that the amendment request involves no significant hazards consideration.

Attorney for licensee: R. Alexander Glenn, Associate General Counsel (MAC–BT15A), Florida Power Corporation, P.O. Box 14042, St. Petersburg, Florida 33733–4042.

NRC Acting Section Chief: Kahtan N. Jabbour.

GPU Nuclear Inc., Docket No. 50–320, Three Mile Island Nuclear Generating Station, Unit 2, (TMI–2) Dauphin County, Pennsylvania

Date of amendment request: June 13, 2002.

Description of amendment request: The proposed technical specifications change request (TSCR) No. 79, Revision 1, is to revise Three Mile Island Nuclear Generating Station, Unit 2 (TMI–2) Technical Specification (TS) Administrative Controls section that will provide consistency with Three Mile Island Nuclear Generating Station, Unit 1, (TMI–1) TS changes submitted

by AmerGen Energy Company, LLC (AmerGen) and Exelon Generation Company, LLC (EGC), which are currently under review by the U.S. Nuclear Regulatory Commission (NRC). GPU Nuclear utilizes EGC/AmerGen administrative controls under contract to TMI–2. The proposed request would delete TS Sections 6.4, ''Training,'' and 6.5.4, ''Independent Onsite Safety Review Group'' (IOSRG) from the administrative requirements in Section 6 of the TMI–2 Post Defueled Monitored Storage (PDMS) TS. Additionally, the IOSRG has been removed from the list of recipients of audit reports in Section 6.5.3.2.

Basis for proposed no significant hazards consideration determination: As required by 10 CFR 50.91(a), the licensee has provided its analysis of the issue of no significant hazards consideration, which is presented below:

1. Does the change involve a significant increase in the probability or consequences of an accident previously evaluated?

TMI–2 is a defueled facility holding a Possession Only License is being maintained in Post Defueling Monitored Storage (PDMS). The introduction of the PDMS Quality Assurance Plan states in part in the second paragraph, ''Since the plant will be in a non-operating and defueled status, there will no longer be any structures, systems, or components that perform a safety function.''

Deletion of the technical specifications requirements for training and the IOSRG will have no adverse effect on any plant system; will not alter the source term, containment isolation, or allowable radiological consequences. These administrative changes will have no effect on any plant systems, structures or components and do not affect the physical plant, operating procedures, maintenance procedures, or emergency procedures at TMI–2.

The elimination of the IOSRG oversight function removes a function that is redundant to other oversight programs, not required by NRC regulation, and is not needed for the safe monitoring of TMI–2. Programmatic assessments of the TMI–2 programs will continue to be assessed by Nuclear Oversight personnel in accordance with the PDMS Quality Assurance Plan. Training will continue to be conducted in accordance with regulatory requirements.

The training programs for appropriate unit staff personnel other than licensed operators is now addressed by 10 CFR 50.120. With the 10 CFR 50.120 rule, the NRC is emphasizing the need to ensure that industry personnel training programs are based upon job performance requirements. This will be accomplished using the systems approach to training implemented by INPO [Institute of Nuclear Power Operations] accredited training programs for selected nuclear personnel. Included within the rule is the requirement that the training program must reflect industry experience. Deletion of the training requirements in the technical specifications will conform the license to the current requirements of 10 CFR 50.120.

Therefore, these changes will not involve a significant increase in the probability or consequences of an accident previously evaluated.

2. Does the change create the possibility of a new or different kind of accident from any accident previously evaluated?

These changes are administrative in nature and do not affect any system functional requirements, plant maintenance, or operability requirements. The proposed changes involve the elimination of a redundant oversight function and the replacement of training requirements by the more vigorous requirements of 10 CFR 50.120, which are applicable to operating plants.

The proposed changes have no direct effect on any plant systems or components. The programs for the monitoring, surveillance, or maintenance of TMI–2 are unaffected. Oversight of TMI–2 will continue to be provided by Nuclear Oversight personnel and the TMI–2 Safety Oversight Committee in accordance with the requirements of the PDMS Quality Assurance Plan.

Therefore, the proposed changed will not create the possibility of a new or different kind of accident from any accident previously evaluated.

3. Does the change involve a significant reduction in a margin of safety?

The training and IOSRG requirements contained in TMI–2 Technical Specifications Section 6.0 ''Administrative Controls'' are administrative in nature. The proposed changes have no direct effect on any plant systems. There are currently no safety limits that apply to TMI–2 during PDMS. Therefore, the proposed changes do not involve a significant reduction in a margin of safety.

The NRC staff has reviewed the licensee's analysis and, based on this review it appears that the three standards of 50.92(c) are satisfied. Therefore, the NRC staff proposes to determine that the amendment request involves no significant hazards consideration.

Attorney for licensee: Ernest L. Blake, Jr., Esquire, Shaw, Pittman, Potts & Trowbridge, 2300 N Street, NW., Washington, DC 20037.

NRC Section Chief: Robert A. Gramm.

Nine Mile Point Nuclear Station, LLC, Docket No. 50–220, Nine Mile Point Nuclear Station Unit No. 1, Oswego County, New York

Date of amendment request: June 28, 2002.

Description of amendment request: The licensee proposed changes to surveillance requirements in Table 4.6.2b, ''Instrumentation that Initiates Primary Coolant System or Containment Isolation,'' of the Nine Mile Point Nuclear Station, Unit No. 1 (NMP1) Technical Specifications (TS) regarding the isolation capability of the shutdown cooling system (SDCS). Specifically, the changes will remove the restriction to perform channel functional testing and channel calibration associated with SDCS high area temperature only during refueling outages. The changes will allow these surveillance activities to be performed during other operating conditions on a once-per-operating-cycle basis, thereby maintaining SDCS availability to support reactor shutdown operations during refueling.

Basis for proposed no significant hazards consideration determination: As required by 10 CFR 50.91(a), the licensee has provided its analysis of the issue of no significant hazards consideration, which is presented below:

1. The operation of Nine Mile Point Unit 1 in accordance with the proposed amendment will not involve a significant increase in the probability or consequences of an accident previously evaluated.

The only safety-related functions of the SDCS are (i) to maintain the integrity of the reactor coolant pressure boundary, and (ii) to provide primary containment isolation of the shutdown cooling lines. The proposed amendment removes an unnecessary restriction to perform channel functional testing and calibration associated with SDCS isolation capability only during refueling outages. It provides the flexibility to perform these surveillances during other operating conditions on a ''once per operating cycle'' basis. The change does not modify the surveillance frequency, surveillance acceptance criteria, high area temperature setpoint limit for initiating SDCS isolation, plant equipment configurations during SDCS surveillances, or the existing requirements for maintaining SDCS isolation and reactor coolant pressure boundary integrity.

Based on the above, the operation of NMP1 in accordance with the proposed amendment will not involve a significant increase in the probability or the consequences of an accident previously evaluated.

2. The operation of Nine Mile Point Unit 1 in accordance with the proposed amendment will not create the possibility of a new or different kind of accident from any accident previously evaluated.

The proposed change does not involve any physical modifications to the plant and does not alter equipment configuration, setpoints, safety parameters, surveillance interval durations, or surveillance acceptance criteria. It does not affect the operation of any safety-related structure, system, or component in a manner that could introduce a new accident precursor or a new failure mechanism. The SDCS isolation valves will continue to perform their isolation function by remaining closed with power removed during power operation of the reactor.

Based on the above, the operation of NMP1 in accordance with the proposed amendment cannot create the possibility of a new or different kind of accident from any accident previously evaluated.

3. The operation of Nine Mile Point Unit 1 in accordance with the proposed

amendment will not involve a significant reduction in a margin of safety.

The proposed change does not affect any of the plant's fission product barriers or safety/operational limits. The high area temperature setpoint for SDCS isolation will remain within the existing TS limit.

The SDCS isolation valves will continue to remain closed with power removed during power operation of the reactor. The proposed ''[o]nce per operating cycle'' surveillances will be adequate to ensure acceptable SDCS equipment operability and reliability.

Based on the above, the operation of NMP1 in accordance with the proposed amendment will not involve a significant reduction in a margin of safety.

The NRC staff has reviewed the licensee's analysis and, based on this review, it appears that the three standards of 10 CFR 50.92(c) are satisfied. Therefore, the NRC staff proposes to determine that the amendment request involves no significant hazards consideration.

Attorney for licensee: Mark J. Wetterhahn, Esquire, Winston & Strawn, 1400 L Street, NW., Washington, DC 20005–3502.

NRC Section Chief: Richard J. Laufer.

Nine Mile Point Nuclear Station, LLC, Docket No. 50–220, Nine Mile Point Nuclear Station Unit No. 1, Oswego County, New York

Date of amendment request: July 12, 2002.

Description of amendment request: The licensee proposed to change the Technical Specifications (TSs), Sections 3.1.1 and 4.1.1, ''Control Rod System,'' by reducing the power level below which the rod worth minimizer (RWM) or a second independent verification of rod positions must be used from 20% rated thermal power (RTP) to 10% RTP. The licensee stated that analysis has shown that no significant control rod drop accident (CRDA) can occur above 10% RTP. The low power setpoint change will reduce the time necessary for both reactor startup and shutdown.

Basis for proposed no significant hazards consideration determination: As required by 10 CFR 50.91(a), the licensee has provided its analysis of the issue of no significant hazards consideration, which is reproduced below:

The operation of Nine Mile Point Unit 1, in accordance with the proposed amendment, will not involve a significant increase in the probability or consequences of an accident previously evaluated.

The TS revision lowers the power level at which the analyzed rod position sequence must be followed by use of the RWM or a second independent verification of rod positions. The RWM enforces the analyzed rod position sequence to ensure that the initial conditions of the CRDA analysis are not violated. Compliance with the analyzed rod position sequence and operability of the RWM is required in the startup and run modes when thermal power is less than 10% RTP. When thermal power is 10% RTP or greater, there is no possible control rod configuration that results in a control rod worth that could exceed the 280 cal/gram fuel design limit during a CRDA. None of the accidents previously evaluated assume the RWM is an initiator of the accident and therefore, the probability of an accident is not significantly increased by the change. Because the fuel design limit is not exceeded, the change to the low power setpoint will not significantly increase the consequences of an accident previously evaluated.

The operation of Nine Mile Point Unit 1, in accordance with the proposed amendment, will not create the possibility of a new or different kind of accident from any accident previously evaluated.

The TS revision lowers the power level below which the analyzed rod position sequence must be followed. The change does not introduce a new mode of plant operation and does not involve a physical modification to the plant. Therefore, a new or different type of accident from any accident previously evaluated is not created.

The operation of Nine Mile Point Unit 1, in accordance with the proposed amendment, will not involve a significant reduction in a margin of safety.

The RWM enforces the analyzed rod position sequence to ensure that the initial conditions of the CRDA analysis are not violated. Compliance with the analyzed rod position sequence and operability of the RWM are required in the startup and run modes when thermal power is less than 10% RTP. When thermal power is 10% RTP and greater, there is no possible control rod configuration that results in a control rod worth that could exceed the 280 cal/gram fuel design limit during a CRDA. Because the fuel design limit is not exceeded at 10% RTP and greater, the change to the RWM low power setpoint does not significantly reduce the margin of safety.

The NRC staff has reviewed the licensee's analysis and, based on this review, it appears that the three standards of 10 CFR 50.92(c) are satisfied. Therefore, the NRC staff proposes to determine that the amendment request involves no significant hazards consideration.

Attorney for licensee: Mark J. Wetterhahn, Esquire, Winston & Strawn, 1400 L Street, NW., Washington, DC 20005–3502.

NRC Section Chief: Richard J. Laufer.

Nuclear Management Company, LLC, Docket No. 50–305, Kewaunee Nuclear Power Plant, Kewaunee County, Wisconsin

Date of amendment request: July 12, 2002.

Description of amendment request: The proposed amendment would revise the Kewaunee Nuclear Power Plant (KNPP) Technical Specifications (TS) Section 3.1.a.3, ''Pressurizer Safety Valves.'' Also, the proposed amendment would reformat TS 3.1.a.3 to more closely resemble the format of Improved Standard Technical Specification (ISTS) to improve clarity. The proposed amendment would allow both pressurizer safety valves to be inoperable or removed while the reactor vessel head is on. This would only be applicable when the temperature and pressure are low enough such that the Low Temperature Overpressure Protection (LTOP) System can safely protect the Reactor Coolant System (RCS). The TSs currently requires the LTOP System to protect the RCS when the RCS temperature is less than LTOP enabling temperature.

Basis for proposed no significant hazards consideration determination: As required by 10 CFR 50.91(a), the licensee has provided its analysis of the issue of no significant hazards consideration, which is presented below:

1. Involve a significant increase in the probability or consequences of an accident previously evaluated.

The format changes are administrative in nature and therefore have no effect on the probability or consequences of an accident. The situation where the plant has two inoperable or removed pressurizer safeties while the LTOP System is enabled is not considered an accident initiator. Therefore, any change to the system would not affect the probability of an accident previously evaluated. The risk of core damage/release of radioactivity would not increase with all of the other plant safety features still in place.

The proposed changes adds clarity to the TSs by describing a specific situation when the RCS is at low temperature & pressure while overpressure protection is provided by the LTOP System. Since this TS change is not an accident initiator and existing TS will ensure the LTOP System will continue to protect the RCS pressure boundary, this proposed amendment does not involve an increase in the probability or consequences of an accident previously evaluated.

2. Create the possibility of a new or different kind of accident from any accident previously evaluated.

The situation where the plant has two inoperable pressurizer safeties while the LTOP System is enabled is not considered an accident initiator. A failure of this system will not result in an accident. The format changes are administrative in nature and therefore have no effect on the probability or consequences of a new or different kind of accident from any accident previously evaluated.

The proposed changes do not involve a change to the physical plant or operations. As the RCS temperature is lowered to less than 200 °F, the LTOP System provides the RCS overpressure protection required. Since the LTOP System is currently approved for use by TS 3.1.b.4, it would not create the

possibility of a new or different kind of accident from any accident previously evaluated.

Therefore, any change to the system would not affect the probability of an accident previously evaluated.

3. Involve a significant reduction in the margin of safety.

The format changes are administrative in nature and therefore are not involved in a significant reduction in the margin of safety. Margin of safety relates to overpressure protection when the RCS is less than 200 °F. This margin is controlled by the LTOP System completely and does not rely on the pressurizer safeties. This proposed amendment allows KNPP to have both pressurizer safeties to be inoperable as long as the RCS is below the LTOP System enabling temperature. Therefore, NMC concludes that there is not a significant reduction in the margin of safety.

The NRC staff has reviewed the licensee's analysis and, based on this review, it appears that the three standards of 10 CFR 50.92(c) are satisfied. Therefore, the NRC staff proposes to determine that the amendment request involves no significant hazards consideration.

Attorney for licensee: Bradley D. Jackson, Esq., Foley and Lardner, P.O. Box 1497, Madison, WI 53701–1497.

NRC Section Chief: L. Raghavan.

Southern Nuclear Operating Company, Inc., Georgia Power Company, Oglethorpe Power Corporation, Municipal Electric Authority of Georgia, City of Dalton, Georgia, Docket Nos. 50–321 and 50–366, Edwin I. Hatch Nuclear Plant, Units 1 and 2, Appling County, Georgia

Date of amendment request: June 24, 2002.

Description of amendment request: The proposed amendment would revise Technical Specification (TS) 5.5.3, ''Post Accident Sampling System (PASS),'' to eliminate the requirements to have and maintain the PASS at Plant Hatch. The changes are based on NRC-approved Technical Specification Task Force (TSTF) Standard Technical Specification Change Traveler, TSTF–413, ''Elimination of Requirements for a Post Accident Sampling System (PASS).''

The NRC staff issued a notice of opportunity for comment in the **Federal Register** on December 27, 2001 (66 FR 66949), on possible amendments concerning TSTF–413, including a model safety evaluation and model no significant hazards consideration (NSHC) determination, using the consolidated line-item improvement process. The NRC staff subsequently issued a notice of availability of the models for referencing in license amendment application in the **Federal Register** on March 20, 2002 (67 FR 13027). The licensee affirmed the applicability of the following NSHC determination in its application dated June 24, 2002.

Basis for proposed no significant hazards consideration determination: As required by 10 CFR 50.91(a), an analysis of the issue of no significant hazards consideration is presented below:

Criterion 1—The Proposed Change Does Not Involve a Significant Increase in the Probability or Consequences of an Accident Previously Evaluated

The PASS was originally designed to perform many sampling and analysis functions. These functions were designed and intended to be used in post accident situations and were put into place as a result of the [Three Mile Island, Unit 2] TMI–2 accident. The specific intent of the PASS was to provide a system that has the capability to obtain and analyze samples of plant fluids containing potentially high levels of radioactivity, without exceeding plant personnel radiation exposure limits. Analytical results of these samples would be used largely for verification purposes in aiding the plant staff in assessing the extent of core damage and subsequent offsite radiological dose projections. The system was not intended to and does not serve a function for preventing accidents and its elimination would not affect the probability of accidents previously evaluated.

In the 20 years since the TMI–2 accident and the consequential promulgation of post accident sampling requirements, operating experience has demonstrated that a PASS provides little actual benefit to post accident mitigation. Past experience has indicated that there exists in-plant instrumentation and methodologies available in lieu of a PASS for collecting and assimilating information needed to assess core damage following an accident. Furthermore, the implementation of Severe Accident Management Guidance (SAMG) emphasizes accident management strategies based on in-plant instruments. These strategies provide guidance to the plant staff for mitigation and recovery from a severe accident. Based on current severe accident management strategies and guidelines, it is determined that the PASS provides little benefit to the plant staff in coping with an accident.

The regulatory requirements for the PASS can be eliminated without degrading the plant emergency response. The emergency response, in this sense, refers to the methodologies used in ascertaining the condition of the reactor core, mitigating the consequences of an accident, assessing and projecting offsite releases of radioactivity, and establishing protective action recommendations to be communicated to offsite authorities. The elimination of the PASS will not prevent an accident management strategy that meets the initial intent of the post-TMI–2 accident guidance through the use of the SAMGs, the emergency plan (EP), the emergency operating procedures (EOP), and site survey monitoring that support modification of emergency plan protective action recommendations (PARs).

Therefore, the elimination of PASS requirements from Technical Specifications (TS) (and other elements of the licensing bases) does not involve a significant increase in the consequences of any accident previously evaluated.

Criterion 2—The Proposed Change Does Not Create the Possibility of a New or Different Kind of Accident from any Previously Evaluated

The elimination of PASS related requirements will not result in any failure mode not previously analyzed. The PASS was intended to allow for verification of the extent of reactor core damage and also to provide an input to offsite dose projection calculations. The PASS is not considered an accident precursor, nor does its existence or elimination have any adverse impact on the pre-accident state of the reactor core or post accident confinement of radioisotopes within the containment building.

Therefore, this change does not create the possibility of a new or different kind of accident from any previously evaluated.

Criterion 3—The Proposed Change Does Not Involve a Significant Reduction in the Margin of Safety

The elimination of the PASS, in light of existing plant equipment, instrumentation, procedures, and programs that provide effective mitigation of and recovery from reactor accidents, results in a neutral impact to the margin of safety. Methodologies that are not reliant on PASS are designed to provide rapid assessment of current reactor core conditions and the direction of degradation while effectively responding to the event in order to mitigate the consequences of the accident. The use of a PASS is redundant and does not provide quick recognition of core events or rapid response to events in progress. The intent of the requirements established as a result of the TMI–2 accident can be adequately met without reliance on a PASS.

Therefore, this change does not involve a significant reduction in the margin of safety.

Based upon the reasoning presented above and the previous discussion of the amendment request, the requested change does not involve a significant hazards consideration.

The NRC staff proposes that the amendment request involves no significant hazards consideration.

Attorney for licensee: Ernest L. Blake, Jr., Esquire, Shaw, Pittman, Potts and Trowbridge, 2300 N Street, NW., Washington, DC 20037.

NRC Section Chief: John A. Nakoski.

Southern Nuclear Operating Company, Inc., Georgia Power Company, Oglethorpe Power Corporation, Municipal Electric Authority of Georgia, City of Dalton, Georgia, Docket Nos. 50–321 and 50–366, Edwin I. Hatch Nuclear Plant, Units 1 and 2, Appling County, Georgia

Date of amendment request: July 11, 2002.

Description of amendment request: The proposed amendments would delete Technical Specification 3.3.1.1.I.2, which requires returning the Oscillating Power Range Monitor to operable status within 120 days of discovering its operability.

Basis for proposed no significant hazards consideration determination: As required by 10 CFR 50.91(a), the licensee has provided its analysis of the issue of no significant hazards consideration, which is presented below:

1. The proposed change does not involve a significant increase in the probability or consequences of an accident previously evaluated.

The Oscillating Power Range Monitor (OPRM) is not designed for the prevention of an instability event or any other previously evaluated event. Accordingly, it cannot increase the probability of an instability event or any other previously evaluated event.

The consequences of the instability event are not significantly increased, because the alternate method of detection and suppression of thermal-hydraulic instability oscillations is well established at Plant Hatch. Furthermore, operators are adequately trained on instabilities.

This proposed change to delete the 120-day Completion Time restriction on an inoperable OPRM does not affect any other system designed for the mitigation of previously analyzed events.

For the above reasons, the probability and consequences of a previously analyzed event are not increased.

2. The proposed change does not create the possibility of a new or different kind of accident from any accident previously evaluated.

The proposed change only deletes a Technical Specification requirement. It does not physically alter the design, operation, testing, or maintenance of any plant system or piece of equipment. The proposed change introduces no new modes of operation. Consequently, the change does not create the possibility of a new or different kind [of] event.

3. The change does not involve a significant reduction in the margin of safety.

The proposed change deletes the requirement to restore the OPRM system to operable status within 120 days of discovering its inoperability. A manual alternate method to detect and suppress thermal-hydraulic instability oscillations has been included in Plant Hatch procedures for many years. Also, operators are trained on instability events.

Accordingly, the manual alternate method is adequate and thus, the margin of safety for the instability event is not significantly reduced.

The NRC staff has reviewed the licensee's analysis and, based on this review, it appears that the three standards of 10 CFR 50.92(c) are satisfied. Therefore, the NRC staff proposes to determine that the amendment request involves no significant hazards consideration.

The NRC staff has reviewed the licensee's analysis and, based on this review, it appears that the three standards of 10 CFR 50.92(c) are satisfied. Therefore, the NRC staff proposes to determine that the amendment request involves no significant hazards consideration.

Attorney for licensee: Ernest L. Blake, Jr., Esquire, Shaw, Pittman, Potts and Trowbridge, 2300 N Street, NW., Washington, DC 20037.

NRC Section Chief: John A. Nakoski.

STP Nuclear Operating Company, Docket Nos. 50–498 and 50–499, South Texas Project, Units 1 and 2, Matagorda County, Texas

Date of amendment request: August 2, 2001.

Description of amendment request: The proposed amendment revises Technical Specifications to extend, on a one-time basis, the current interval for Type A testing from 10 years to 15 years.

Basis for proposed no significant hazards consideration determination: As required by 10 CFR 50.91(a), the licensee has provided its analysis of the issue of no significant hazards consideration, which is presented below:

The proposed Technical Specification revision extends the current interval for Type A testing. The current test interval of ten years would be extended on a one-time basis to 15 years from the preceding Type A test. Pursuant to 10 CFR 50.91, this analysis provides a determination that the proposed change to the Technical Specifications for a one-time extension of the interval for Integrated Leakage Rate Testing does not involve any significant hazards consideration as defined in 10 CFR 50.92.

Criterion 1: The proposed change does not involve a significant increase in the probability or consequences of an accident previously evaluated.

The proposed extension to the Type A testing interval will not increase the probability of an accident previously evaluated. The containment Type A testing interval extension is not a modification and the testing interval extension is not of a type that could lead to equipment failure or accident initiation.

The proposed extension to the Type A testing interval does not involve a significant increase in the consequences of an accident. Research documented in NUREG–1493 has determined that Type B and C tests can identify the vast majority (more than 95%) of all potential leakage paths.

NUREG–1493 concluded that reducing the Type A test frequency to one per twenty years leads to an imperceptible increase in risk. Testing and inspection provide a high degree of assurance that the containment will not degrade in a manner detectable only by Type A testing. Previous Type A tests show leakage does not exceed acceptance criteria, indicating a very leak-tight containment. Inspections required by the Maintenance Rule and ASME code are performed in order to identify indications of containment degradation that could affect leak tightness.

Experience at the South Texas Project demonstrates that excessive containment leakage paths are detected by Type B and C Local Leakage Rate Tests. Type B and C testing will identify any containment opening, such as a valve, that would otherwise be detected by the Type A tests. These factors show that a Type A test interval extension will not involve a significant increase in the consequences of an accident.

Criterion 2: The proposed change does not create the possibility of a new or different kind of accident from any previously evaluated.

The proposed extension of the Type A testing interval will not create the possibility of a new or different type of accident from any previously evaluated. There are no physical changes being made to the plant and there are no changes in operation of the plant that could introduce a new failure mode creating an accident or affecting the mitigation of an accident.

Criterion 3: The proposed change does not involve a significant reduction in the margin of safety.

The proposed extension of the Type A testing interval will not significantly reduce the margin of safety. The NUREG–1493 generic study of the effects of extending containment leakage testing found that a 20-year interval in Type A leakage testing results in an imperceptible increase in risk to the public. NUREG–1493 found that, generically, the design containment leakage rate contributes about 0.1 percent to the individual risk and that the decrease in Type A testing frequency would have a minimal effect on this risk because 95% of the potential leakage paths are detected by Type B and C testing.

Deferral of Type A testing for the South Texas Project does not increase the level of public risk due to loss of capability to detect and measure containment leakage or loss of containment structural capability. Other containment testing methods and inspections will assure all limiting conditions of operation will continue to be met. The margin of safety inherent in existing accident analyses is maintained.

Based on the evaluation provided above, the South Texas Project concludes that the proposed change does not involve a significant hazards consideration and will not have a significant effect on safe operation of the plant. Therefore, there is reasonable

assurance that operation of the South Texas Project in accordance with the proposed revised Technical Specifications will not endanger the public health and safety.

The NRC staff has reviewed the licensee's analysis and, based on this review, it appears that the standards of 10 CFR 50.92(c) are satisfied. Therefore, the NRC staff proposes to determine that the request for amendments involves no significant hazards consideration.

Attorney for licensee: Alvin H. Gutterman, Esqr., Morgan, Lewis, & Bockius, 1111 Pennsylvania Avenue, NW., Washington, DC 20004.

NRC Section Chief: Robert A. Gramm.

Tennessee Valley Authority, Docket No. 50–327, Sequoyah Nuclear Plant, Unit 1, Hamilton County, Tennessee

Date of amendment request: July 10, 2002.

Description of amendment request: The proposed one-time technical specification (TS) change revises the Sequoyah Unit 2 Limiting Condition for Operation for Section TS 3.7.4, ''Essential Raw Cooling Water System,'' to include provisions for maintaining operability of this system during performance of heavy load lifts associated with the Unit 1 steam generator replacement (SGR) project. The provisions should ensure safe operation of Unit 2 during heavy load lift activities. In addition, compensatory measures proposed should ensure safe shutdown capability of Unit 2 in the unlikely event a heavy load drop occurs over Essential Raw Cooling Water system piping.

Basis for proposed no significant hazards consideration determination: As required by 10 CFR 50.91(a), the Tennessee Valley Authority (TVA) has provided its analysis of the issue of no significant hazards consideration, which is presented below:

TVA has concluded that operation of Sequoyah (SQN) Unit 2, in accordance with the proposed change to Technical Specification (TS) 3/4.7.4, does not involve a significant hazards consideration. TVA's conclusion is based on its evaluation, in accordance with 10 CFR 50.91(a)(1), of the three standards set forth in 10 CFR 50.92(c).

TVA's proposed license amendment is a one-time change to the SQN Unit 2 TSs. The proposed change revises SQN Limiting Condition for Operation 3.7.4, ''Essential Raw Cooling Water System,'' to include provisions for maintaining operability of this system during performance of heavy load lifts associated with the Unit 1 steam generator replacement (SGR) project. The provisions ensure safe operation of Unit 2 during heavy load lift activities. In addition, compensatory measures ensure safe shutdown capability of Unit 2 in the unlikely event a heavy load drop occurs over ERCW system piping.

A. The proposed amendment does not involve a significant increase in the probability or consequences of an accident previously evaluated.

No changes in event classification as discussed in SQN Updated Final Safety Analysis Chapter 15 will occur due to the proposed TS amendment. The one-time TS provision ensures that the SQN essential raw cooling water (ERCW) system remains operable for continued safe operation of Unit 2 during heavy load lifts performed on Unit 1 during SGR replacement activities.

Accordingly, the proposed modification to SQN Unit 2 TSs and the implementation of compensatory measures for a postulated load drop will not significantly increase the probability or consequences of an accident previously evaluated.

B. The proposed amendment does not create the possibility of a new or different kind of accident from any accident previously evaluated.

The possibility of a new or different accident scenario occurring as a result of activities conducted during the SQN Unit 1 SGR project are not created. Three postulated scenarios related to heavy load handling during the SGR project were examined for their potential to represent a new or different kind of accident from those previously evaluated: (1) a breach of the old steam generator (OSG), resulting in the release of contained radioactive material, (2) flooding in the Auxiliary Building caused by the failure of piping in the ERCW tunnel, and (3) loss of ERCW to support safe shutdown of the operating unit.

Failure of an OSG that results in a breach of the primary side of the steam generator (SG) could potentially result in a release of a contained source outside containment. The consequences of this event, both offsite and in the control room, were examined and found to be within the consequences of the failure of other contained sources outside containment at the SQN site (*i.e.,* within the SQN design basis).

With regard to flooding of the Auxiliary Building from a heavy load drop, the protective measure taken prior to the lifting of heavy loads include installation of a wall in the ERCW tunnel near the Auxiliary Building interface. The wall provides protection against a postulated flood of the ERCW tunnel and protects against flooding of the Auxiliary Building beyond those events previously evaluated.

With regard to the potential for a heavy load drop causing the loss of ERCW cooling water to the operating unit (i.e., Unit 2), TVA is implementing provisions to preclude a load drop. A heavy load drop is considered an unlikely accident for the following reasons:

- The lifting equipment was specifically designed and chosen for the subject heavy lifts,
- Crane operators will be specially trained in the operation of the lift equipment and in the SQN site conditions,
- Qualifying analyses and administrative controls will be used to protect the lifts from the effects of external events,
- The areas over which a load drop could cause loss of ERCW are a small part of the total travel path of the loads.

In addition, protection against the potential for a loss of ERCW is established prior to any heavy load lifts. Compensatory measures ensure the ERCW system is isolated should a pipe break occur, and that ERCW flow is redirected to equipment essential for safe shutdown capability of Unit 2.

Accordingly, the possibility of a new or different kind of accident from any accident previously evaluated is not created.

C. The proposed amendment does not involve a significant reduction in a margin of safety.

The proposed change to the Unit 2 TSs support safe operation and safe shutdown capability of Unit 2 during replacement of the Unit 1 SGs. These measures do not result in changes in the design basis for plant structures, systems, and components (SSCs). Consequently, the proposed change will not affect any margins of safety for plant SSCs.

Accordingly, a significant reduction in the margin of safety is not created by the proposed change.

The NRC staff has reviewed the licensee's analysis and, based on this review, it appears that the three standards of 10 CFR 50.92(c) are satisfied. Therefore, the NRC staff proposes to determine that the amendment request involves no significant hazards consideration.

Attorney for licensee: General Counsel, Tennessee Valley Authority, 400 West Summit Hill Drive, ET 11A Knoxville, Tennessee 37902.

NRC Section Chief: Kahtan N. Jabbour, Acting.

Tennessee Valley Authority, Docket No. 50–327, Sequoyah Nuclear Plant, Unit 1, Hamilton County, Tennessee

Date of application for amendments: March 29, 2002 (TS 02–02).

Brief description of amendments: The proposed amendment would change the Sequoyah (SQN) Unit 1 Technical Specifications (TSs) by revising Specification 3/4.4.5 to eliminate surveillance requirements associated with two alternate repair criteria. The associated License Condition 2.C.9.d is also deleted. In addition, the proposed change revises SR 3/4.4.5.3.a to allow a one-time, 40-month steam generator (SG) inspection interval after the first (post-Unit 1 SG replacement) inservice inspection resulting in a C–1 category. The proposed change is in lieu of the current TS criteria that requires two consecutive category C–1 inspections for application of the 40-month SG inspection interval.

Basis for proposed no significant hazards consideration determination: As required by 10 CFR 50.91(a), Tennessee Valley Authority (TVA), the licensee, has provided its analysis of the issue of no significant hazards consideration, which is presented below:

TVA has concluded that operation of Sequoyah Nuclear Plant (SQN) Unit 1, in accordance with the proposed change to the technical specifications and License Condition, does not involve a significant hazards consideration. TVA's conclusion is based on its evaluation, in accordance with 10 CFR 50.91(a)(1), of the three standards set forth in 10 CFR 50.92(c).

TVA is proposing to modify SQN Unit 1 TS 3/4.4.5, ''Steam Generators'' to delete surveillance requirements (SRs) that describe steam generator (SG) tube plugging limits for two alternate repair criteria (ARC). The first ARC is for axial outside diameter stress corrosion cracking (ODSCC) at non-dented tube support plates and the second ARC is for axial primary water stress corrosion cracking (PWSCC) at dented tube support plates. TVA's proposed amendment removes both ARCs through the deletion of the following SRs: SR 4.4.5.2.b.4, 4.4.5.2.d, 4.4.5.2.e, a portion of 4.4.5.4.a.6, 4.4.5.4.a.10, 4.4.5.4.a.11, 4.4.5.5.d, and 4.4.5.5.e. TVA's proposed removal of these SRs for ARC reestablishes standard tube plugging criteria within the TS for SQN Unit 1. Returning to the standard TS 40 percent through-wall tube plugging limit is inherently more conservative.

Included with the above change is deletion of License Condition 2.C.9.d that references prior TVA commitment letters for SG inspection. The TVA letters and their commitments will no longer apply following replacement of the Unit 1 SGs.

In addition, TVA is proposing a revision to TS 3/4.4.5.3.a to allow application of the 40-month inspection interval after one SG inspection resulting in a C–1 category. The proposed change replaces the current TS requirement that invokes the extended 40-month inspection interval after two consecutive inspections resulting in a category of C–1. TVA's proposed change provides a relaxation of the SG inspection requirements and schedule. The relaxation in the inspection schedule is intended to coincide with replacement of SQN Unit 1 SGs during the Cycle 12 refueling outage (Spring 2003). The replacement of the SQN Unit 1 SGs incorporate significant design improvements that include thermally treated Alloy 690 SG tubing. The improvements in SG design and tube material properties increase the resistance to SG tube degradation mechanisms and allow optimization of SG inspection schedules. The proposed optimization of SG inspections reduce the cumulative number of SG inspections over the life of the plant and result in significant dose, schedule, and cost savings to TVA.

A. The proposed amendment does not involve a significant increase in the probability or consequences of an accident previously evaluated.

TVA's proposed TS amendment does not compromise limits associated with SG tube integrity. TVA's proposed change removes existing SG tube plugging criteria (*i.e.,* ARC) from the TS and reestablishes the standard TS criteria (40 percent through-wall criteria). This change is inherently more conservative. The proposed allowance for an extended inspection interval is a conservative inspection strategy that is based on improved SG design features and SG tube materials that have been shown to resist degradation and preserve SG tube integrity.

The proposed revision does not alter plant equipment, test methods or operating practices. The proposed change continues to provide controls for safe operation of SQN SGs within the required limits. The proposed change does not contribute to events or assumptions associated with postulated design basis accidents (*i.e.,* SG tube rupture). The proposed change does not affect operator indicators or actions required to diagnose or mitigate a SG tube rupture accident. The proposed revisions continue to maintain the required safety functions. Accordingly, the probability of an accident or the consequences of an accident previously evaluated is not increased.

B. The proposed amendment does not create the possibility of a new or different kind of accident from any accident previously evaluated.

TVA's proposed amendment removes existing repair criteria and incorporates the more conservative TS limit for SG tube plugging (*i.e.,* plug tubes with degradation depths equal to or greater than 40 percent through-wall). This change will not give rise to new failure modes. The failure of a SG tube to maintain leakage integrity during operation is an analyzed event in the SQN Updated Final Safety Analysis Report. TVA's proposed change to the SG inspection interval will not introduce a new or different kind of accident scenario. Accordingly, the proposed change does not create the possibility of a new or different kind of accident from any accident previously evaluated.

C. The proposed amendment does not involve a significant reduction in a margin of safety.

TVA's proposed TS amendment is conservative with respect to the margin of safety. The margin of safety is preserved through ensuring structural integrity and leakage integrity of the SG tubes.

TVA's proposed change that to remove ARC from the TS does not compromise structural integrity or leakage integrity of SG tubes. The proposed change invokes the standard TS tube plugging criteria limit (40 percent through-wall criteria) which is inherently conservative.

TVA's proposed change to include a one-time extension to the SQN Unit 1 SG inspection interval retains conservative inspection strategy that maintains the structural and leakage integrity of the SGs. TVA intends to replace SQN Unit 1 SGs during the Cycle 12 refueling outage and perform a 100 percent full length inspection of SG tubes during the Cycle 13 refueling outage to verify that damage mechanisms do not exist. Twelve years of SG operation history indicate that corrosion damage mechanisms do not appear in replacement SGs that contain thermally treated Alloy 690 tubing. The replacement SG design also contains design improvements that provide reasonable assurance that tube degradation is not likely to occur over the proposed 40-month operating period (Cycle 13 refueling outage to Cycle 15 refueling outage). The corrosion resistant properties of the thermally treated Alloy 690 tubing and the improved design will limit the initiation of damage mechanisms and limit growth rate such that tube structural and leakage integrity will be maintained over two operating cycles.

TVA's proposed change to extend the SG inspection interval does not result in a change to system design features. The proposed change does not affect the plant conditions, setpoints, or safety limits that could result in precursors to accidents or degrade accident mitigation systems. Accordingly, plant system safety functions are not altered by the proposed change.

The effect of this change is to extend allowable SG inspection intervals while retaining conservative margins to maintain the structural and leakage integrity of the SGs. Consequently, the proposed TS revisions does not reduce the margin of safety.

The NRC has reviewed the licensee's analysis and, based on this review, it appears that the three standards of 10 CFR 50.92(c) are satisfied. Therefore, the NRC staff proposes to determine that the amendment request involves no significant hazards consideration.

Attorney for licensee: General Counsel, Tennessee Valley Authority, 400 West Summit Hill Drive, ET 10H, Knoxville, Tennessee 37902.

NRC Section Chief: Kahtan N. Jabbour, Acting.

Tennessee Valley Authority, Docket Nos. 50–327 and 50–328, Sequoyah Nuclear Plant, Units 1 and 2, Hamilton County, Tennessee

Date of application for amendments: July 10, 2002 (TS 01–09).

Brief description of amendments: The proposed amendment would change the Sequoyah (SQN) Unit 1 and 2 Technical Specifications (TSs) by removing the requirement to not make positive reactivity changes during certain conditions and replace it with requirements to maintain shutdown margin or boron concentration. The changes will permit limited positive reactivity changes that are necessitated by plant operations. These changes will limit the amount of reactivity changes to those that will continue to assure appropriate reactivity limits are met. The proposed changes are consistent with TS Task Force 286 and Revision 2 to NUREG–1431.

Basis for proposed no significant hazards consideration determination: As required by 10 CFR 50.91(a), Tennessee Valley Authority (TVA), the licensee, has provided its analysis of the issue of no significant hazards consideration, which is presented below:

A. The proposed amendment does not involve a significant increase in the

probability or consequences of an accident previously evaluated.

The proposed change does not involve an increase in the probability or consequences of an accident previously evaluated. The proposed activities to be allowed during certain operating conditions are permitted at other times during routine operating conditions. The changes do not affect the limits on reactivity that are specified in other specifications. The proposed changes continue to ensure restrictions on additions and flowpaths of unborated water that are in the existing specifications. The proposed change does not affect the limits on reactivity that are credited in the safety analysis. Therefore, no increase in the probability or consequences of any accident previously evaluated will occur.

B. The proposed amendment does not create the possibility of a new or different kind of accident from any accident previously evaluated.

The proposed changes permit the conduct of normal operating evolutions during limited periods when additional controls over reactivity margin are imposed by the TSs. The proposed change does not introduce any new equipment into the plant or significantly alter the manner in which existing equipment will be operated. The changes to operating allowances are minor and are only applicable during certain conditions. The operating allowances are consistent with those acceptable at other times. Since the proposed changes only allow activities that are presently approved and routinely conducted, no possibility exists for a new or different kind of accident from those previously evaluated.

C. The proposed amendment does not involve a significant reduction in a margin of safety.

The proposed changes do not involve a significant reduction in a margin of safety because the ability to make the reactor subcritical and maintain it subcritical during all operating conditions and modes of operation will be maintained. The margin of safety is defined by the shutdown margin limits and the refueling boron concentration limit. The proposed changes do not affect these operating restrictions and the margin of safety which assures the ability to make and maintain the reactor subcritical is not affected.

The NRC has reviewed the licensee's analysis and, based on this review, it appears that the three standards of 10 CFR 50.92(c) are satisfied. Therefore, the NRC staff proposes to determine that the amendment request involves no significant hazards consideration.

Attorney for licensee: General Counsel, Tennessee Valley Authority, 400 West Summit Hill Drive, ET 10H, Knoxville, Tennessee 37902.

NRC Section Chief: Kahtan N. Jabbour, Acting.

Previously Published Notices of Consideration of Issuance of Amendments to Facility Operating Licenses, Proposed No Significant Hazards Consideration Determination, and Opportunity for a Hearing

The following notices were previously published as separate individual notices. The notice content was the same as above. They were published as individual notices either because time did not allow the Commission to wait for this biweekly notice or because the action involved exigent circumstances. They are repeated here because the biweekly notice lists all amendments issued or proposed to be issued involving no significant hazards consideration.

For details, see the individual notice in the **Federal Register** on the day and page cited. This notice does not extend the notice period of the original notice.

Virginia Electric and Power Company, Docket Nos. 50–338 and 50–339, North Anna Power Station, Units 1 and 2, Louisa County, Virginia

Date of amendment request: July 18, 2002.

Brief description of amendment request: These amendments would revise the Facility Operating Licenses (FOLs) to change the implementation date for the Improved Technical Specifications (ITS), including the relocation of certain existing TS requirements to licensee-controlled documents, from no later than September 2, 2002, to no later than December 20, 2002.

Date of publication of individual notice in ***Federal Register:*** July 25, 2002 (67 FR 48679).

Expiration date of individual notice: August 26, 2002.

Notice of Issuance of Amendments to Facility Licenses

During the period since publication of the last biweekly notice, the Commission has issued the following amendments. The Commission has determined for each of these amendments that the application complies with the standards and requirements of the Atomic Energy Act of 1954, as amended (the Act), and the Commission's rules and regulations. The Commission has made appropriate findings as required by the Act and the Commission's rules and regulations in 10 CFR Chapter I, which are set forth in the license amendment.

Notice of Consideration of Issuance of Amendment to Facility Operating License, Proposed No Significant Hazards Consideration Determination, and Opportunity for A Hearing in connection with these actions was published in the **Federal Register** as indicated.

Unless otherwise indicated, the Commission has determined that these amendments satisfy the criteria for categorical exclusion in accordance with 10 CFR 51.22. Therefore, pursuant to 10 CFR 51.22(b), no environmental impact statement or environmental assessment need be prepared for these amendments. If the Commission has prepared an environmental assessment under the special circumstances provision in 10 CFR 51.12(b) and has made a determination based on that assessment, it is so indicated.

For further details with respect to the action see (1) the applications for amendment, (2) the amendment, and (3) the Commission's related letter, Safety Evaluation and/or Environmental Assessment as indicated. All of these items are available for public inspection at the Commission's Public Document Room, located at One White Flint North, 11555 Rockville Pike (first floor), Rockville, Maryland. Publicly available records will be accessible from the Agencywide Documents Access and Management Systems (ADAMS) Public Electronic Reading Room on the internet at the NRC Web site, *http://www.nrc.gov/reading-rm/adams.html.* If you do not have access to ADAMS or if there are problems in accessing the documents located in ADAMS, contact the NRC Public Document Room (PDR) Reference staff at 1–800–397–4209, 301–415–4737 or by e—mail to pdr@nrc.gov.

AmerGen Energy Company, LLC, Docket No. 50–461, Clinton Power Station, Unit 1, DeWitt County, Illinois

Date of application for amendment: December 28, 2000, as supplemented May 31, 2002.

Brief description of amendment: The amendment decreases the allowed outage time for an inoperable channel or channels of the anticipated transient without scram recirculation pump trip instrumentation.

Date of issuance: July 17, 2002.

Effective date: As of the date of issuance and shall be implemented within 30 days.

Amendment No.: 153.

Facility Operating License No. NPF–62: The amendment revised the Technical Specifications.

Date of initial notice in ***Federal Register:*** February 7, 2001 (66 FR 9378). The supplemental letter did not significantly change the requested amendment or affect the proposed no significant hazards consideration determination.

The Commission's related evaluation of the amendment is contained in a Safety Evaluation dated July 17, 2002.

No significant hazards consideration comments received: No.

Consumers Energy Company, Docket No. 50–155, Big Rock Point Plant, Charlevoix, County, Michigan

Date of amendment request: July 31, 2001, as supplemented by letters dated March 6, and April 23, 2002.

Brief description of amendment: The amendment revises License Condition 2.C.(3) of Operating License DPR–6 to reference revisions of the Big Rock Point Defueled Security Plan, Defueled Suitability Training and Qualification Plan, Defueled Safeguards Contingency Plan, and Independent Spent Fuel Storage Installation Security Plan.

Date of issuance: July 18, 2002.

Effective date: As of the date of issuance and shall be implemented prior to placing the spent fuel in the Big Rock Point Plant independent spent fuel storage installation.

Amendment No.: 123.

Facility Operating License No. DPR–6: The amendment revised the Facility Operating License.

Date of initial notice in **Federal Register:** August 22, 2001 (66 FR 44166). The March 6 and April 23, 2002, supplemental letters provided additional clarifying information that did not expand the scope of the application as originally noticed and did not change the NRC staff's original proposed no significant hazards consideration determination. The Commission's related evaluation of the amendment is contained in a Safety Evaluation dated July 18, 2002.

No significant hazards considerations comments received: No.

Dominion Nuclear Connecticut, Inc., et al., Docket No. 50–423, Millstone Nuclear Power Station, Unit No. 3, New London County, Connecticut

Date of application for amendment: February 5, 2002 as supplemented on March 6, 2002.

Brief description of amendment: The amendment changes the term in the technical specifications ''once each REFUELING INTERVAL'' to ''once per 24 months'' in several surveillance requirements.

Date of issuance: July 24, 2002.

Effective date: As of the date of issuance and shall be implemented within 90 days from the date of issuance.

Amendment No.: 206.

Facility Operating License No. NPF–49: Amendment revised the Technical Specifications.

Date of initial notice in ***Federal Register:*** May 28, 2002 (67 FR 36930). The Commission's related evaluation of the amendment is contained in a Safety Evaluation dated July 24, 2002.

No significant hazards consideration comments received: No.

Duke Energy Corporation, et al., Docket Nos. 50–413 and 50–414, Catawba Nuclear Station, Units 1 and 2, York County, South Carolina

Date of application for amendments: December 20, 2001.

Brief description of amendments: The amendments revised the Technical Specifications (TS) 5.5.14 to eliminate the use of the term ''unreviewed safety question,'' and replace the word ''involve'' with the word ''require'' as it applies to changes made to the updated Final Safety Analysis Report and the TS Bases.

Date of issuance: July 17, 2002.

Effective date: As of the date of issuance and shall be implemented within 30 days from the date of issuance.

Amendment Nos.: 200 & 193.

Facility Operating License Nos. NPF–35 and NPF–52: Amendments revised the Technical Specifications.

Date of initial notice in ***Federal Register:*** March 5, 2002 (67 FR 10010). The Commission's related evaluation of the amendments is contained in a Safety Evaluation dated July 17, 2002.

No significant hazards consideration comments received: No.

Duke Energy Corporation, Docket Nos. 50–369 and 50–370, McGuire Nuclear Station, Units 1 and 2, Mecklenburg County, North Carolina

Date of application for amendment: December 20, 2001.

Brief description of amendments: The amendments revised the Technical Specifications (TS) 5.5.14 to eliminate the use of the term ''unreviewed safety question,'' and replace the word ''involve'' with the word ''require'' as it applies to changes made to the updated Final Safety Analysis Report and the TS Bases.

Date of issuance: July 17, 2002.

Effective date: As of the date of issuance and shall be implemented within 30 days from the date of issuance.

Amendment Nos.: 204 & 185.

Facility Operating License Nos. NPF- and NPF–17: Amendments revised the Technical Specifications.

Date of initial notice in ***Federal Register:*** January 22, 2002 (67 FR 2921). The Commission's related evaluation of the amendments is contained in a Safety Evaluation dated July 17, 2002.

No significant hazards consideration comments received: No.

Energy Operations, Inc., System Energy Resources, Inc., South Mississippi Electric Power Association, and Energy Mississippi, Inc., Docket No. 50–416, Grand Gulf Nuclear Station, Unit 1, Claiborne County, Mississippi

Date of application for amendment: January 31, 2002, as supplemented by letter dated June 20, 2002.

Brief description of amendment: The amendment revises Technical Specification 3.8.1, ''AC Sources-Operating,'' to extend the allowed outage time for a Division 1 or Division 2 Diesel Generator from the current 72 hours to 14 days.

Date of issuance: July 16, 2002.

Effective date: As of the date of issuance and shall be implemented within 60 days of issuance.

Amendment No: 151.

Facility Operating License No. NPF–29: The amendment revises the Technical Specifications.

Date of initial notice in ***Federal Register:*** April 2, 2002 (67 FR 15623). The June 20, 2002, supplemental letter provided clarifying information that did not change the scope of the original **Federal Register** notice or the original no significant hazards consideration determination.

The Commission's related evaluation of the amendment is contained in a Safety Evaluation dated July 16, 2002.

No significant hazardous consideration comments received: No.

Exelon Generation Company, LLC, Docket Nos. 50–a254 and 50–265, Quad Cites Nuclear Power Station, Units 1 and 2, Rock Island County, Illinois

Date of application for amendments: May 1, 2002.

Brief description of amendments: The amendments revise the start delay time in the surveillance for the emergency diesel generators from ''≤10 seconds'' to ''≤13 seconds.''

Date of issuance: July 17, 2002.

Effective date: For Unit 2, as of the date of issuance and shall be implemented within 30 days of the completion of Unit 1 refueling outage 17, which is scheduled for November 2002. For Unit 1, as of the date of issuance and shall be implemented within 30 days following the date when General Electric (GE)–14 fuel is loaded into the reactor, which is scheduled during refueling outage 17 in November 2002. The amendment may not be implemented prior to the date GE–14 fuel is loaded into the reactor.

Amendment Nos.: 206 and 202.

Facility Operating License Nos. DPR–29 and DRP–30: The amendments revised the Technical Specifications.

Date of initial notice in ***Federal Register:*** a May 28, 2002 (67 FR 36931). The Commission's related evaluation of the amendments is contained in a Safety Evaluation dated July 17, 2002.

No significant hazards consideration comments received: No.

Florida Power Corporation, et al., Docket No. 50–302, Crystal River Unit No. 3 Nuclear Generating Plant, Citrus County, Florida

Date of application for amendments: July 24, 2001, as supplemented June 5, and July 1.

Brief description of amendments: The amendments revise the Improved Technical Specifications (ITS) to accommodate future changes in plant design, including increased levels of Once—Through Steam Generator (OTSG) tube plugging. The changes are categorized into two sets. The first set of changes relocate parameters from the ITS to the cycle-specific Core Operating Limits Report (COLR). These parameters are the Variable Low Pressure Trip equation specified in ITS Table 3.3.1–1, and Reactor Coolant System (RCS) pressure limit within Surveillance Requirement (SR) 3.4.1.1. The second set of changes are applicable to raising the OTSG tube plugging limit to a maximum of 20% equivalent of all tubes, and addresses its impact. These changes include the revision of the hot leg maximum temperature limit, and the revision of the RCS minimum flow limits for four- and three-reactor coolant pump operation. The RCS limits associated with 20% tube plugging will be maintained in its ITS. Cycle-specific values of these limits, however, have been relocated to the COLR. The hot leg temperature and RCS flow limit values within SR 3.4.1.2 and 3.4.1.3 ''RCS Pressure, Temperature, and Flow DNB [departure from nucleate boiling] Limits,'' were relocated to reflect their location in the COLR. For both sets of changes, ITS 5.6.2.18(a) was modified to reflect the relocation of cycle-specific values from the ITS and the COLR.

Date of issuance: July 16, 2002.

Effective date: As of the date of issuance shall be implemented within 60 days of issuance.

Amendment Nos.: 204.

Facility Operating License Nos. DPR–72: The amendment revised the Technical Specifications.

Date of initial notice in ***Federal Register:*** a August 22, 2001 (66 FR 44173). The supplemental letters provided clarifying information that did not change the initial proposed no significant hazards consideration determination.

The Commission's related evaluation of the amendments is contained in a Safety Evaluation dated July 16, 2002.

No significant hazards consideration comments received: No.

Nebraska Public Power District, Docket No. 50–298, Cooper Nuclear Station, Nemaha County, Nebraska

Date of amendment request: July 30, 2001, as supplemented by letter dated August 23, 2001.

Description of amendment request: The amendment revises the Cooper Nuclear Station's licensing basis.

Date of issuance: July 19, 2002.

Effective date: The amendment is effective on the date of issuance, to be implemented within 30 days from the date of issuance.

Amendment No.: 192.

Facility Operating License No. DPR–46: Amendment revises the Cooper Nuclear Station's licensing basis.

Public comments requested as to proposed no significant hazards consideration (NSHC): Yes. June 25, 2002 (67 FR 42828). The notice provided an opportunity to submit comments on the Commission's proposed NSHC determination. No comments have been received. The notice also provided an opportunity to request a hearing by July 29, 2002, but indicated that, if the Commission makes a final NSHC determination, any such hearing would take place after issuance of the amendment.

The Commission's related evaluation of the amendment, finding of exigent circumstances, state consultation, and final NSHC determination are contained in a safety evaluation dated July 19, 2002.

Attorney for licensee: Mr. John R. McPhail, Nebraska Public Power District, Post Office Box 499, Columbus, NE 68602–0499.

NRC Section Chief: Robert A. Gramm.

Nebraska Public Power District, Docket No. 50–298, Cooper Nuclear Station (CNS), Nemaha County, Nebraska.

Date of amendment request: May 20, 2002, as supplemented by letters dated June 19, July 3 (two letters), and July 12, 2002. The letters dated July 3 (two letters), and July 12, 2002, were of a clarifying nature, did not expand the application beyond the scope of the initial notice, and did not affect the staff's initial proposed no significant hazards consideration determination.

Description of amendment request: The amendment revises the Cooper Nuclear Station's Technical Specifications (TS) 3.7.2 and 3.7.3 reflecting increases in TS temperature limits for ultimate heat sink and reactor equipment cooling water temperatures.

Date of issuance: July 22, 2002.

Effective date: The amendment is effective on the date of issuance, to be implemented within 30 days from the date of issuance.

Amendment No.: 193.

Facility Operating License No. DPR–46: Amendment revises the Cooper Nuclear Station's TS.

Public comments requested as to proposed no significant hazards consideration (NSHC): Yes. 67 FR 43688 dated June 28, 2002. The notice provided an opportunity to submit comments on the Commission's proposed NSHC determination. No comments have been received. The notice also provided an opportunity to request a hearing by July 12, 2002, but indicated that if the Commission makes a final NSHC determination, any such hearing would take place after issuance of the amendment.

The Commission's related evaluation of the amendment, finding of exigent circumstances, state consultation, and final NSHC determination are contained in a safety evaluation dated July 22, 2002.

Attorney for licensee: Mr. John R. McPhail, Nebraska Public Power District, Post Office Box 499, Columbus, NE 68602–0499.

NRC Section Chief: Robert A. Gramm.

Southern Nuclear Operating Company, Inc., Georgia Power Company, Oglethorpe Power Corporation, Municipal Electric Authority of Georgia, City of Dalton, Georgia, Docket Nos. 50–321 and 50–366, Edwin I. Hatch Nuclear Plant, Units 1 and 2, Appling County, Georgia

Date of application for amendments: September 20, 2001, as supplemented by letters dated March 27 and April 12, 2002.

Brief description of amendments: The amendments revised the Technical Specifications to support extension of the operating cycle from 18 months to 24 months.

Date of issuance: July 12, 2002.

Effective date: As of the date of issuance and shall be implemented within 30 days from the date of issuance.

Amendment Nos.: 232/174.

Renewed Facility Operating License Nos. DPR–57 and NPF–5: Amendments revised the Technical Specifications.

Date of initial notice in ***Federal Register:*** November 28, 2001 (66 FR 59512). The supplements dated March 27 and April 12, 2002, provided clarifying information that did not

change the scope of the September 20, 2001, application nor the initial proposed no significant hazards consideration determination.

The Commission's related evaluation of the amendments is contained in a Safety Evaluation dated July 12, 2002.

No significant hazards consideration comments received: No.

STP Nuclear Operating Company, Docket Nos. 50–498 and 50–499, South Texas Project, Units 1 and 2, Matagorda County, Texas

Date of amendment request: October 22, 2001, as supplemented by letters dated May 16 and June 25, 2002.

Brief description of amendments: The amendments change TS 3/4.9.4, ''Refueling Operations—Containment Building Penetrations'', to allow the equipment hatch to be open during core alterations or movement of irradiated fuel within the containment.

Date of issuance: July 18, 2002.

Effective date: July 18, 2002.

Amendment Nos.: Unit 1—139; Unit 2—128.

Facility Operating License Nos. NPF–76 and NPF–80: The amendments revised the Technical Specifications.

Date of initial notice in ***Federal Register:*** January 22, 2002 (67 FR 2930). The May 16 and June 25, 2002, supplemental letters provided clarifying information that was within the scope of the original **Federal Register** notice and did not change the staff's initial no significant hazards consideration determination.

The Commission's related evaluation of the amendments is contained in a Safety Evaluation dated July 18, 2002.

No significant hazards consideration comments received: No.

Dated at Rockville, Maryland, this 26th day of July 2002.

For the Nuclear Regulatory Commission.

Ledyard B. Marsh,

Acting Director, Division of Licensing Project Management, Office of Nuclear Reactor Regulation.

[FR Doc. 02–19420 Filed 8–5–02; 8:45 am]

BILLING CODE 7590–01–P

SECURITIES AND EXCHANGE COMMISSION

[Release No. IC–25690; File No. 812–12767]

American United Life Insurance Company, et al.; Notice of Application July 31, 2002.

AGENCY: Securities and Exchange Commission (''Commission'').

ACTION: Notice of Application for an order pursuant to section 26(c) of the Investment Company Act of 1940, as amended (''1940 Act''), approving certain substitutions of securities, and pursuant to section 17(b) of the 1940 Act exempting related transactions from section 17(a) of the 1940 Act.

APPLICANTS: American United Life Insurance Company (''AUL''), AUL American Unit Trust (''AUL Account''), AUL American Individual Unit Trust (''AUL Individual Account'') and, with respect only to the relief requested pursuant to section 17(b), OneAmerica Funds, Inc. (''OneAmerica''). AUL, the AUL Account, the AUL Individual Account and OneAmerica are together referred to herein as the ''Applicants.''

SUMMARY OF APPLICATION: Applicants request an order to permit certain registered unit investment trusts to substitute (i) shares of common stock issued by OneAmerica Asset Director Portfolio (''Asset Director Portfolio''), a series of OneAmerica for shares of common stock issued by OneAmerica Tactical Asset Allocation Portfolio (''Tactical Asset Allocation Portfolio''), also a series of OneAmerica; and (ii) Investor Class shares issued by American Century Strategic Allocation: Conservative Fund (''Strategic Allocation: Conservative Fund''), American Century Strategic Allocation: Moderate Fund (''Strategic Allocation: Moderate Fund''), and American Century Strategic Allocation: Aggressive Fund (''Strategic Allocation: Aggressive Fund'' and, together with the Strategic Allocation: Conservative Fund and the Strategic Allocation: Moderate Fund, the ''Strategic Allocation Funds''), each a series of American Century Strategic Asset Allocations, Inc. (''American Century Strategic'') for shares of common stock issued by the OneAmerica Conservative Investor Portfolio (''Conservative Investor Portfolio''), OneAmerica Moderate Investor Portfolio (''Moderate Investor Portfolio''), and OneAmerica Aggressive Investor Portfolio (''Aggressive Investor Portfolio'' and, together with the Conservative Investor Portfolio and the Moderate Investor Portfolio, the ''Lifestyle Portfolios''), each a series of OneAmerica, respectively, currently held by those unit investment trusts, and to permit in-kind purchases and redemptions of portfolio securities in connection with the proposed substitution transactions relating to the Tactical Asset Allocation Portfolio and the Asset Director Portfolio (''In-Kind Transactions'').

FILING DATE: The application was filed on January 28, 2002, and amended and restated on July 26, 2002 (''Amended and Restated Application'').

HEARING OR NOTIFICATION OF HEARING: An order granting the Application will be issued unless the Commission orders a hearing. Interested persons may request a hearing by writing to the Commission's Secretary and serving Applicants with a copy of the request, personally or by mail. Hearing requests should be received by the SEC by 5:30 p.m. on August 26, 2002, and should be accompanied by proof of service on Applicants, in the form of an affidavit or, for lawyers, a certificate of service. Hearing requests should state the nature of the writer's interest, the reason for the request, and the issues contested. Persons who wish to be notified of a hearing may request notification by writing to the Secretary of the Commission.

ADDRESSES: Secretary, Securities and Exchange Commission, 450 Fifth Street, NW, Washington, DC 20549–0609. Applicants: c/o Richard A. Wacker, *Esq.*, American United Life Insurance Company, One American Square, Indianapolis, Indiana 46282. Copies to: Keith T. Robinson, Dechert, 1775 Eye Street, NW, Washington, DC 20006–2401.

FOR FURTHER INFORMATION CONTACT: Patrick F. Scott, Attorney, or Lorna J. MacLeod, Branch Chief, Office of Insurance Products, Division of Investment Management, at (202) 942–0670.

SUPPLEMENTARY INFORMATION: The following is a summary of the application; the complete application may be obtained for a fee from the Public Reference Branch of the Commission, 450 Fifth Street, NW, Washington, DC 20549, (202) 942–8090.

Applicants' Representations

1. AUL is an Indiana stock insurance company. AUL is the depositor and sponsor of the AUL Account and the AUL Individual Account, each a separate investment account established under Indiana law.

2. The AUL Account and the AUL Individual Account are each registered with the Commission under the 1940 Act as a unit investment trust. The assets of the AUL Account and the AUL Individual Account support certain individual and group variable annuity contracts (collectively, the ''Contracts''). The individual variable annuity contracts include Contracts for which premiums may vary in amount and frequency, subject to certain limitations and Contracts for which premiums may vary in amount and frequency during

the first year. The group variable annuity Contracts may allow ongoing contributions that can vary in amount and frequency, while other Contracts may allow only a single contribution to be made. All of the Contracts provide for the accumulation of values either on a variable basis, a fixed basis, or both. The Contracts also provide several options for fixed annuity payments to begin on a future date.

3. The AUL Account is currently divided into sixty-two (62) sub-accounts referred to as Investment Accounts. Each Investment Account, in turn, invests exclusively in shares of an underlying fund or in shares of specific series thereof. Contributions may be allocated to one or more Investment Accounts available under a Contract. Not all of the Investment Accounts may be available under a particular Contract and some of the Investment Accounts are not available for certain types of Contracts. AUL may in the future establish additional Investment Accounts of the AUL Account which may invest in other securities, mutual funds or investment vehicles.

4. The AUL Individual Account is currently divided into nineteen (19) sub-accounts also referred to as Investment Accounts. Each Investment Account in turn, invests exclusively in shares of an underlying fund or in shares of specific series thereof. Premiums may be allocated to one or more Investment Accounts available under a Contract. AUL may in the future establish additional Investment Accounts of the AUL Individual Account which may invest in other securities, mutual funds or investment vehicles.

5. OneAmerica is organized as a Maryland corporation and is registered as an open-end management investment company under the 1940 Act. OneAmerica is a series investment company, as defined by Rule 18f–2 under the 1940 Act, and currently offers shares of eight (8) separate series. Only five (5) such series would be involved in the proposed substitutions. The Conservative Investor Portfolio, the Moderate Investor Portfolio, the Aggressive Investor Portfolio and the Tactical Asset Allocation Portfolio are herein referred to as the Removed Portfolios. The Asset Director Portfolio is one of the Substituted Portfolios, as defined in paragraph nine (9).

6. Effective May 1, 2002, OneAmerica's name was changed from ''AUL American Series Fund, Inc.'' to ''OneAmerica Funds, Inc.'' In addition, the names of the various series of OneAmerica involved in the proposed Substitutions, were changed effective May 1, 2002 as follows:

Former name	New name
AUL American Tactical Asset Allocation Portfolio.	OneAmerica Tactical Asset Allocation Portfolio.
AUL American Managed Portfolio.	OneAmerica Asset Director Portfolio.
AUL American Conservative Investor Portfolio.	OneAmerica Conservative Investor Portfolio.
AUL American Moderate Investor Portfolio.	OneAmerica Moderate Investor Portfolio.
AUL American Aggressive Investor Portfolio.	OneAmerica Aggressive Investor Portfolio.

7. AUL, an investment adviser registered under the Investment Advisers Act of 1940, as amended (''Advisers Act''), currently serves as the investment adviser for each of the OneAmerica Portfolios pursuant to an investment advisory agreement between AUL and OneAmerica, on behalf of the OneAmerica Portfolios, dated March 8, 1990 (''Investment Advisory Agreement''). Pursuant to the Investment Advisory Agreement, and subject to the overall supervision of the Board of Directors of OneAmerica, AUL exercises overall responsibility for the investment and reinvestment of the assets of each OneAmerica Portfolio. AUL currently manages the day-to-day investment operations and the composition of all of the assets of each of the OneAmerica Portfolios.

8. Until May 1, 2002, Credit Suisse Asset Management, LLC (''CSAM''), another investment adviser registered under the Advisers Act, was responsible for managing the growth-oriented equity and international equity portions of the Conservative Investor Portfolio, the Moderate Investor Portfolio and the Aggressive Investor Portfolio (together, the ''Lifestyle Portfolios''), pursuant to a sub-advisory agreement (''CSAM Sub-Advisory Agreement''). On October 30, 2001, CSAM notified AUL and the Lifestyle Portfolios that it intended to terminate the CSAM Sub-Advisory Agreement effective May, 1, 2002. Consequently, AUL assumed responsibility for managing all of the assets of the Lifestyle Portfolios on May 1, 2002.

9. Dean Investment Associates (''Dean''), a division of C.H. Dean and Associates, Inc., served as the sub-adviser for the Tactical Asset Allocation Portfolio from May 15, 1995 to November 10, 2001 pursuant to a sub-advisory agreement (''Dean Sub-Advisory Agreement''). On September 7, 2001, AUL gave notice to Dean that it intended to terminate the Dean Sub-Advisory Agreement, effective November 10, 2001. AUL assumed the investment management duties for the Tactical Asset Allocation Portfolio on November 10, 2001.

10. American Century Strategic is organized as a Maryland corporation and is registered as an open-end management investment company under the 1940 Act. American Century Strategic is a series investment company, as defined by Rule 18f–2 under the 1940 Act, and currently offers shares of three separate series, the Strategic Allocation: Conservative Fund; the Strategic Allocation: Moderate Fund; and the Strategic Allocation: Aggressive Fund (together with the Asset Director Portfolio, the ''Substituted Portfolios'').

11. The prospectuses for both the AUL Account and the AUL Individual Account state that ''AUL reserves the right, subject to compliance with the law as then in effect, to make additions to, deletions from, substitutions for, or combinations of the securities that are held by the Variable Account or any Investment Account or that the Variable Account or any Investment Account may purchase.'' Comparable language appears in the Contracts.

12. With the exceptions noted below, neither the AUL Account nor the AUL Individual Account imposes any limitations on the number of transfers between variable investment accounts available under a Contract or the fixed account or imposes charges on transfers. With respect to the AUL Individual Account, the minimum transfer amount from any one Investment Account or from the fixed account is $500. Under certain circumstances, amounts transferred from the fixed account to an Investment Account during any given year may not exceed 20% of the fixed account's value as of the beginning of that year. AUL reserves the right, however, at a future date, to impose a different minimum or maximum transfer amount, to assess transfer charges, to change the limit on remaining balances, to limit the number and frequency of transfers, and to suspend the transfer privilege or the telephone authorization, interactive voice response, or internet based transfers.

13. Applicants propose to substitute (i) shares of common stock issued by the Tactical Asset Allocation Portfolio currently held by the AUL Account and the AUL Individual Account for shares of common stock issued by the Asset Director Portfolio; and (ii) shares of common stock issued by each of the Lifestyle Portfolios currently held by the

AUL Account for the Investor Class shares issued by the corresponding Strategic Allocation Funds (the ''Substitutions'').

14. As shown in the chart below, the Tactical Asset Allocation Portfolio has investment objectives, investment strategies and anticipated risks that are compatible, although not identical, to those of the Asset Director Portfolio.

	Removed portfolio	Substituted portfolio
	Tactical asset allocation portfolio	Asset director portfolio
Investment objective	Preservation of capital and competitive investment returns.	High total return consistent with prudent investment risk.
Investment Strategies	Primary Investment Strategy: To achieve this objective, the portfolio invests primarily in stocks, United States Treasury issues, corporate bonds, and other debt securities. When markets are favorable, the portfolio concentrates on peformance; in declining markets, the portfolio will have less equities in its portfolio it an effort to protect its assets.	Primary Investment Strategy: The investments of the portfolio are not limited to one type of investment, and it purchases publicly traded common stocks, debt securities, and money market instruments. The makeup of the portfolio changes based on AUL's evaluation of economic and market trends and the expected total return from a particular type of security. Therefore, up to 100% of the portfolio may be invested in any one type of investment such as common stocks, debt securities, or money market instruments.
	Types of Securities: The portfolio will normally invest at least 65% of its equity assets in the common or preferred stocks of companies listed on a national exchange or traded over-the-counter. The focus is generally on high quality, liquid, undervalued stocks of small, medium and large capitalization companies. When market conditions require a more defensive position, the portfolio invests more of its assets in investment grade corporate debt securities, U.S. government securities and money market instruments.	Types of Securities: The portfolio may buy common stocks listed on a national securities exchange or traded over-the-counter and debt securities, including investment grade corporate bonds, U.S. government securities, convertible bonds and mortgage-backed securities. The portfolio can invest up to 10% of its assets in debt securities that are rated below-investment grade (''junk bonds''). The portfolio also may buy high quality money market instruments.

15. Applicants represent it is also the case that: (i) the management fees with respect to the Asset Director Portfolio were lower than the management fees applicable to the Tactical Asset Allocation Portfolio as of December 31, 2001; and (ii) the total expense ratio with respect to the Asset Director Portfolio was lower than the total expense ratio of the Tactical Asset Allocation Portfolio as of December 31, 2001. The chart below shows the management fees, operating expenses and total expenses for the Tactical Asset Allocation Portfolio and the Asset Director Portfolio for the year ended December 31, 2001. The fees and expenses in the chart are presented as a percentage of average daily net assets.

	Removed portfolio	Substituted portfolio
	Tactical asset allocation portfolio (%)	Asset director portfolio (%)
Management Fee	0.80	0.50
12b–1 Fee	0.00	0.00
Other Expenses	0.20	0.14
Gross Total Annual Operating Expenses	1.00	0.64

16. As shown in the chart below, each Lifestyle Portfolio has investment objectives, investment strategies and anticipated risks that are substantially similar to those of the corresponding Strategic Allocation Fund.

	Removed portfolio	Substituted portfolio
	Conservative investor portfolio	Strategic allocation: Conservative Fund
Investment Objective	High current income, with opportunities for capital appreciation.	Highest level of total return consistent with its asset mix.
Investment Strategies	Primary Investment Strategy: To achieve its objective, the portfolio invests in a strategically allocatted portfolio, primarily of bond and money market instruments, with the balance of the portfolio in equities.	Primary Investment Strategy: Seeks regular income through its emphasis on bonds and cash-equivalent securities. It also has the potential for moderate long-term total return as a result of its stake in equity securities.

	Removed portfolio	Substituted portfolio
	Conservative investor portfolio	Strategic allocation: Conservative Fund
	Types of Securities: The portfolio invests in a mix of equity securities, bonds and money market instruments. Within each asset class, the portfolio's holdings are invested across a diversified group of industries and issuers based on AUL's investment criteria. AUL regularly reviews the portfolio's investments and allocations and may make changes in the particular securities or in the asset mix (within defined operating ranges) to favor investments that it believes will help achieve the portfolio's objective.	Types of Securities: The fund may invest in any type of U.S. or foreign equity security that meets certain fundamental and technical standards. The fund managers draw on growth, value and quantitative investment techniques in managing the equity portion the fund's portfolio and they diversify the fund's equity investments among small, medium and large companies. The fund also invests in a variety of debt securities payable in both U.S. and foreign currencies. The fund primarily invests in investment grade securities, that is, securities rated in the four highest categories by independent rating organizations.
	Neutral Mix: Equity: 35% Debt: 50% Cash: 15%	Neutral Mix: Equity: 45% Debt: 45% Cash: 10%
	Moderate Investor Portfolio	Strategic Allocation: Moderate Fund
Investment Objective	Blend of capital appreciation income	Highest level of total return consistent with its asset mix.
Investment Strategies	Primary Investment Strategy: To achieve its objective, the portfolio invests in a strategically allocated portfolio of equities, bonds and money market instruments with a weighting that is normally slightly heavier in equities.	Primary Investment Strategy: Seeks long-term capital growth with some regular income. It emphasizes investments in equity securities but maintains a sizeable stake in bonds and cash-equivalent securities.
	Type of Securities: Same as Conservative Investor Portfolio.	Type of Securities: Same as the Strategic Allocation: Conservative Fund. The fund may invest up to 5% of its assets in below investment-grade (high-yield) securities.
	Neutral Mix: Equity: 55% Debit: 35% Cash: 10%	Neutral Mix: Equity: 63% Debt: 31% Cash: 6%
	Aggressive Investor Portfolio	Strategic Allocation: Aggressive Fund
Investment Objective	Long-term capital appreciation	Highest level of total return consistent with its asset mix.
Investment Strategies	Primary Investment Strategy: To achieve its objective, the portfolio invests in a strategically allocated portfolio consisting primarily of equities. Current income is not a major consideration.	Primary Investment Strategy: Seeks long-term capital growth with a small amount of regular income. It emphasizes investments in equity securities but maintains a portion of its assets in bonds and cash-equivalent securities.
	Types of Securities: Same as Conservative Investor Portfolio.	Types of Securities: Same as the Strategic Allocation: Conservative Fund. The fund may invest up to 10% of its assets in below investment-grade (high-yield) securities.
	Neutral Mix: Equity: 80% Debt: 20% Cash: 0%	Neutral Mix: Equity: 78% Debt: 20% Cash: 2%

17. It is expected that the net total annual operating expenses with respect to certain of the Strategic Allocation Funds may be higher than the net total annual operating expenses currently applicable to the corresponding Lifestyle Portfolios, even though the gross total annual operating expenses of each Strategic Allocation Fund are lower than those of the corresponding Lifestyle Portfolios. The chart below shows: (i) the management fees, operating expenses and total annual operating expenses (both gross and net of applicable fee waivers and reimbursements) for the shares of common stock of each Lifestyle Portfolio for the year ended December 31, 2001; and (ii) the current total operating expenses of the Investor Class shares of each Strategic Allocation Fund. The fees and expenses in the chart are presented as a percentage of average daily net assets.

	Removed portfolios (percent)	Substituted portfolios (percent)
	Conservative Investor Portfolio	Strategic Allocation: Conservative Fund
Management Fee	0.70	1.00
12b–1 Fee	0.00	0.00
Other Expenses	0.83	0.00
Gross Total Annual Operating Expenses	1.53	1.00
Applicable Waiver or Reimbursements	0.53	0.00
Net Total Annual Operating Expenses	1.00	1.00

	Removed portfolios (percent)	Substituted portfolios (percent)
	Moderate Investor Portfolio	Strategic Allocation: Moderate Fund
Management Fee	0.70	1.10
12b–1 Fee	0.00	0.00
Other Expenses	0.80	0.00
Gross Total Annual Operating Expenses	1.50	1.10
Applicable Waiver or Reimbursements	0.50	0.00
Net Total Annual Operating Expenses	1.00	1.10
	Aggressive Investor Portfolio	Strategic Allocation: Aggressive Fund
Management Fee	0.70	1.20
12b–1 Fee	0.00	0.00
Other Expenses	0.81	0.00
Gross Total Annual Operating Expenses	1.51	1.20
Applicable Waiver or Reimbursements	0.51	0.00
Net Total Annual Operating Expenses	1.00	1.20

18. With respect to the Management Fee for the Strategic Allocation Funds listed in the table above, Applicants state that, out of this fee, American Century Investment Management, Inc. (''American Century''), the investment adviser to the Strategic Allocation Funds, pays all the ordinary expenses of managing and operating the portfolio, except brokerage expenses, taxes, interest, and fees and expenses of the independent directors (including legal counsel fees). This fee does not apply to extraordinary expenses as determined under generally accepted accounting principles. In other words, American Century pays substantially all of the ordinary operating expenses that would normally be shown under ''Other Expenses'' out of the management fee. This management fee may not be raised without a shareholder vote. A breakpoint in the management fee will apply to each Strategic Allocation Fund when it reaches $1 billion. In that case, assets in excess of $1 billion will incur a management fee that is 10 basis points lower than that shown in the table.

19. With respect to the Gross Total Annual Operating Expenses for the Conservative Investor Portfolio, Moderate Investor Portfolio and Aggressive Investor Portfolio listed in the table above, Applicants state that AUL has currently agreed to waive its advisory fee if the ordinary expenses of the portfolio exceed 1% and, to the extent necessary, assume any expenses in excess of its advisory fee so that the expenses of the portfolio, including the advisory fee but excluding extraordinary expenses, will not exceed 1% of the portfolio's average daily net asset value per year. AUL may terminate the policy of reducing its fee and/or assuming fund expenses upon 30 days written notice to the portfolio and such policy will be terminated automatically by the termination of the investment advisory agreement between AUL and the portfolio.

20. Applicants represent that the unified management fee structure employed by the Strategic Allocation Funds has the practical effect of locking in a specific expense ratio for shareholders. AUL's policy of reducing its fee and/or assuming expenses of the Lifestyle Portfolios may be terminated unilaterally by AUL upon thirty (30) days written notice to the portfolio. In comparison, the unified management fees for each of the Strategic Allocation Funds may only be changed by a vote of shareholders.

21. Applicants represent that AUL has determined that it is not feasible to maintain the Lifestyle Portfolios for an extended period of the time following the resignation of CSAM, or to maintain the Tactical Asset Allocation Portfolio for an extended period of time following the resignation of Dean. CSAM was originally hired for its expertise in growth equity and foreign investing—areas in which AUL has little expertise. However, the Lifestyle Portfolios are strategically managed and, as a result, would need to be able to invest in these markets. In addition, Dean was retained in order to provide a process-driven asset allocation program that relies on proprietary forecasting models. AUL has determined that it will not be cost effective to hire internal managers to attempt to provide a comparable model-driven asset allocation program or to manage the small amount of assets that would be invested in the growth equity and foreign equity markets.

22. Applicants assert that finding replacement sub-advisers would not be feasible due to the relatively small size of the Tactical Allocation Portfolio and each of the Lifestyle Portfolios. Management of funds the size of the Removed Portfolios simply is not cost-effective, as demonstrated by AUL's substantial subsidization of the Lifestyle Portfolios, and many investment advisers are not interested in managing registered investment companies of this size. Moreover, since each of these Portfolios is so small, allocating the assets among asset classes can be difficult and inefficient.

23. Applicants respresent that Contract Owners and Participants who have allocated contract values to one or more of the Removed Portfolios have been provided with a detailed notice (in the form of a prospectus or prospectus supplement) disclosing the Substitutions (''First Notice''), which described the relevant Substituted Portfolio(s), identified the relevant Removed Portfolio(s), disclosed the impact of the Substitutions on fees and expenses at the underlying fund level, and disclosed that AUL will not impose any fee, charge or restriction that might otherwise be imposed through a date at least thirty (30) days after the effective date of the proposed Substitutions (''Substitution Date'').

24. Applicants represent that, following Commission approval of the Amended and Restated Application, Applicants will send Contract Owners and Participants who have allocated Contract values to one or more of the Removed Portfolios further detailed notice concerning the proposed Substitutions (''Second Notice''). The Second Notice will inform affected Contract Owners and Participants that the substitutions will be carried out, identify the anticipated date of the

Substitutions and inform Contract Owners and Participants that AUL will not impose any fee, charge or restriction that might otherwise be imposed through a date at least thirty (30) days after the Substitution Date. Together with this disclosure, affected Contract Owners and Participants also will be sent a prospectus for the applicable Substituted Portfolio(s). New purchasers of Contracts also will be provided with the Contract prospectuses, the Second Notice, and a prospectus for the applicable Substituted Portfolio(s).

25. Applicants will effect the Substitutions by redeeming the contributions and premium payments invested in the shares of common stock of the Removed Portfolios and purchasing shares of common stock of the Asset Director Portfolio or Investor Class shares of the Strategic Allocation Funds, as applicable, with the proceeds of that distribution.

26. Redemptions from the Lifestyle Portfolios will be made in cash, as will the corresponding purchases of Investor Class shares of the Strategic Allocation Funds.

27. In the case of the Tactical Asset Allocation Portfolio, the redemptions will take the form of a distribution of that portion of the Tactical Asset Allocation Portfolio's gross assets attributable to the AUL Account and the AUL Individual Account along with the assumption of a corresponding portion of the Tactical Asset Allocation Portfolio's liabilities. Assets to be distributed and liabilities to be assumed may include rights, obligations and liabilities associated with the Tactical Asset Allocation Portfolio's pending trade transactions and over-the-counter positions. All assets and liabilities will be valued based on the normal valuation procedures of the Tactical Asset Allocation Portfolio and the Asset Director Portfolio (which are identical), as set forth in OneAmerica's registration statement. The Substitutions of shares of the Asset Director Portfolio for shares of the Tactical Asset Allocation Portfolio are expected to be performed wholly on an in-kind basis.

28. Confirmation of the Substitutions will be mailed to affected Contract Owners and Participants within five (5) days after the Substitution Date. The confirmation will disclose (i) that the substitution was carried out and (ii) that Contract Owners and Participants may transfer assets from the Substituted Portfolios to another investment option available under their Contract without the imposition of any fee, charge or restriction that might otherwise be imposed through a date at least thirty (30) days after the Substitution Date.

29. Applicants represent that the significant terms of the proposed Substitution described above and in the Amended and Restated Application include:

a. Each Substituted Portfolio will have investment objectives, investment strategies, and anticipated risks that are substantially similar, or at least comparable, in all material respects to those of the corresponding Removed Portfolio.

b. Contract Owners and Participants who have allocated Contract values to one or more of the Removed Portfolios may transfer assets from a Removed Portfolio or a Substituted Portfolio to another investment option available under their Contract without the imposition of any fee, charge or other penalty that might otherwise be imposed from the date of the First Notice through a date at least thirty (30) days following the Substitution Date.

c. The Substitutions, in all cases, will be effected at the relative net asset values of the respective shares of the Removed Portfolios and the corresponding Substituted Portfolios in conformity with Section 22(c) of the 1940 Act and Rule 22c–1 thereunder, without the imposition of any transfer or similar charge by the Applicants, and with no change in the amount of any Contract Owner's Contract value or in the dollar value of any Contract Owner's or Participant's investment in such Contract.

d. Contract Owners and Participants will not incur any fees or charges as a result of the proposed Substitutions, nor will their rights or AUL's obligations under the Contracts be altered in any way. AUL will bear all expenses incurred in connection with proposed seed capital redemptions as well as the Substitutions and related filings and notices, including brokerage, legal, accounting and other fees and expenses. The proposed Substitutions will not cause the Contract fees and charges currently being paid by existing Contract Owners or Participants to be greater after the proposed Substitutions than before the proposed Substitutions.

e. Redemptions in-kind and contributions in-kind will be done in a manner consistent with the investment objectives, policies and diversification requirements of both the Tactical Asset Allocation Portfolio and the Asset Director Portfolio. Consistent with Rule 17a–7(d) under the 1940 Act, no brokerage commissions, fees (except customary transfer fees) or other remuneration will be paid in connection with the In-Kind Transactions.

f. The Substitutions will not be counted as new investment selections in determining the limit, if any, on the total number of Investment Accounts that Contract Owners or Participants can select during the life of a Contract.

g. The Substitutions will not alter in any way the tax benefits, insurance and other Contract benefits, or any Contract obligations of the Applicants, under the Contracts.

h. Contract Owners and Participants may withdraw amounts under the Contracts or terminate their interest in a Contract, under the conditions that currently exist, including payment of any applicable withdrawal or surrender charge.

i. Contract Owners and Participants affected by the Substitutions will be sent written confirmation of the Substitutions that identify each Substitution transaction made on behalf of that Contract Owner or Participant within five (5) days following the Substitution Date.

j. AUL will waive its management fee with respect to the Asset Director Portfolio and/or reimburse ordinary expenses incurred by the Asset Director Portfolio during the twenty-four (24) months following the Substitution Date to the extent necessary to ensure that the total operating expenses for any period (not to exceed a fiscal quarter) of the Asset Director Portfolio do not exceed 1.00% (the total annual operating expenses, net of fee waivers and/or expense reimbursements, for the Tactical Asset Allocation Portfolio for the year ended December 31, 2001) of the Asset Director Portfolio's average daily net assets on an annualized basis.

k. In addition, for all Contract Owners and Participants with contract values allocated to the Tactical Asset Allocation Portfolio as of the Substitution Date, AUL will not increase sub-account or Contract expenses for a period of twenty-four (24) months following the Substitution Date.

l. AUL does not receive, and will not receive for three (3) years following the Substitution Date, any direct or indirect benefits from the Strategic Allocation Funds or their investment adviser or underwriter (or their affiliates), in connection with assets representing contract values of Contracts affected by the Substitution, at a higher contractual rate than it had been entitled to receive from the Lifestyle Portfolios or their investment adviser or underwriter (or their affiliates), including, without limitation: 12b–1 fees; shareholder service fees; administration or other service fees; revenue sharing; or other arrangements in connection with such assets.

m. The Substitution and the selection of the Strategic Allocation Funds were

not motivated by any financial consideration paid or to be paid to AUL, or its affiliates, by the Strategic Allocation Funds, their investment adviser or underwriter, or their respective affiliates.

n. AUL agrees that if the total operating expenses for a Strategic Allocation Fund (taking into account any fee waivers and/or reimbursements) (''Strategic Allocation Fund Expenses'') for any fiscal quarter during the one (1) year period following the Substitution Date exceed on an annualized basis the expense ratio for the corresponding Lifestyle Portfolio (taking into account any fee waivers and/or expense reimbursements) as a percentage of average daily net assets for the fiscal year ended December 31, 2001 (''Lifestyle Portfolio Expenses''), AUL will waive separate account fees and/or reimburse separate account expenses applicable to the Investment Account that invests in the relevant Strategic Allocation Fund for those Contract Owners who were Contract Owners on the Substitution Date, such that the Strategic Allocation Fund Expenses, together with Investment Account expenses paid during that period, will not exceed, on an annualized basis, the corresponding Lifestyle Portfolio Expenses and Investment Account expenses prior to the Substitution Date.

30. Applicants submit that they will not complete the Substitutions as described in the Amended and Restated Application unless all of the following conditions are met:

a. The Commission will have issued an order approving the Substitutions under section 26(c) of the 1940 Act.

b. The Commission will have issued an order exempting the In-Kind Transactions from the provisions of section 17(a) of the 1940 Act, to the extent necessary to carry out the Substitutions as described herein with respect to the Tactical Asset Allocation Portfolio and the Asset Director Portfolio.

c. The amendments to the registration statements for the Contracts describing the Substitutions shall have become effective.

d. Each Contract Owner and Participant who has allocated Contract values to the Removed Portfolios will have been mailed the First Notice, the Second Notice and current prospectuses for the Contracts and the applicable Substituted Portfolio(s).

e. The Applicants will have satisfied themselves, based on advice of counsel familiar with insurance laws, that the Contracts allow the substitution of portfolios as described in the Amended and Restated Application, and that the Substitution transactions can be consummated, as described herein, under applicable insurance laws and under the Contracts.

f. The Applicants will have complied with any regulatory requirements they believe are necessary to complete the transactions in each jurisdiction where the Contracts have been qualified for sale.

Applicants' Legal Analysis

1. Section 26(c) of the 1940 Act provides that it shall be unlawful for any depositor or trustee of a registered unit investment trust holding the security of a single issuer to substitute another security for such security unless the Commission shall have approved such substitution; and the Commission shall issue an order approving such substitution if the evidence establishes that it is consistent with the protection of investors and the purposes fairly intended by the policies and provisions of the 1940 Act. Section 26(c) protects the expectation of investors that the unit investment trust will accumulate shares of a particular issuer and is intended to insure that unnecessary or burdensome sales loads, additional reinvestment costs or other charges will not be incurred due to unapproved substitutions of securities.

2. Applicants request an order pursuant to section 26(c) of the 1940 Act approving the Substitutions. Applicants represent that the purposes, terms, and conditions of the Substitution are consistent with the protections for which Section 26(c) was designed.

3. Applicants state that Contract Owners and Participants who do not want their assets allocated to the Substituted Portfolios would be able to transfer assets to any one of the other Investment Accounts available under their Contract without any transfer charge until thirty (30) days after the Substitution Date.

4. Applicants represent that the Substitution and related redemptions and purchases will not result in any change in the amount of any Contract Owner's or Participant's Contract value or in the dollar value of his or her investment in such Contract. Contract Owners and Participants will not incur any fees or charges as a result of the proposed Substitutions, nor will their rights or AUL's obligations under the Contracts be altered in any way. Furthermore, the proposed Substitutions will not cause the Contract fees and charges currently being paid by existing Contract Owners or Participants to be greater after the proposed Substitutions than before the proposed Substitutions.

5. For these reasons, Applicants assert that the proposed Substitutions are consistent with the protection of investors and the purposes fairly intended by the policy and provisions of the 1940 Act.

6. Section 17(a)(1) of the 1940 Act prohibits an affiliated person or an affiliate of an affiliated person, of a registered investment company, from selling any security or other property to such registered investment company. Section 17(a)(2) of the 1940 Act prohibits such affiliated persons from purchasing any security or other property from such registered investment company.

7. Section 17(b) of the 1940 Act authorizes the Commission to issue an order exempting a proposed transaction from Section 17(a) if: (a) The terms of the proposed transaction are fair and reasonable and do not involve overreaching on the part of any person concerned; (b) the proposed transaction is consistent with the policy of each registered investment company concerned; and (c) the proposed transaction is consistent with the general purposes of the 1940 Act.

8. The Applicants request an order pursuant to section 17(b) of the 1940 Act exempting them from the provisions of Section 17(a) to the extent necessary to permit them to carry out the In-Kind Transactions.

9. The Applicants assert that the In-Kind Transactions, including the consideration to be paid and received, are reasonable and fair and do not involve overreaching on the part of any person concerned. The In-Kind Transactions will be effected at the respective net asset values of the Tactical Asset Allocation Portfolio and the Asset Director Portfolio, as determined in accordance with the procedures disclosed in the registration statement for OneAmerica and as required by Rule 22c–1 under the 1940 Act. The In-Kind Transactions will not change the dollar value of any Participant's or Contract Owner's investment in the AUL Account or the AUL Individual Account, the value of any Contract, the accumulation value or other value credited to any Contract, or the death benefit payable under any Contract. After the proposed In-Kind Transactions, the value of the AUL Account's or AUL Individual Account's investments in the Asset Director Portfolio will equal the value of its investment in the Tactical Asset Allocation Portfolio (together with the value of any pre-existing investment in the Asset Director Portfolio) before the In-Kind Transactions.

10. The Applicants also state that the transactions will conform substantially to the conditions of Rule 17a–7. To the extent that the In-Kind Transactions do not comply fully with the provisions of paragraphs (a) and (b) of Rule 17a–7, the Applicants assert that the terms of the In-Kind Transactions provide the same degree of protection to the participating companies and their shareholders as if the In-Kind Transactions satisfied all of the conditions enumerated in Rule 17a–7. The Applicants also assert that the proposed In-Kind Transactions by the Applicants does not involve overreaching on the part of any person concerned. Furthermore, the Applicants represent that the proposed In-Kind Transactions will be consistent with the policies of the Tactical Asset Allocation Portfolio and the Asset Director Portfolio, as recited in OneAmerica's current registration statement.

11. The Applicants assert that the In-Kind Transactions are consistent with the general purposes of the 1940 Act and that the In-Kind Transactions do not present any of the conditions or abuses that the 1940 Act was designed to prevent.

Conclusion

Applicants assert that, for the reasons summarized above, the Commission should grant the requested order approving the Substitutions and the In-Kind Transactions.

For the Commission, by the Division of Investment Management, pursuant to delegated authority.

Margaret H. McFarland,

Deputy Secretary.

[FR Doc. 02–19782 Filed 8–5–02; 8:45 am]

BILLING CODE 8010–01–P

SECURITIES AND EXCHANGE COMMISSION

[Release No. 34–46282; File No. SR–NYSE–2001–33]

Self-Regulatory Organizations; New York Stock Exchange; Order Granting Approval of a Proposed Rule Change Relating to Issuing Book-Entry Securities

July 30, 2002.

On April 24, 2001, the New York Stock Exchange (''NYSE'') filed with the Securities and Exchange Commission (''Commission'') and on April 16, 2002, and May 7, 2002, amended proposed rule change SR–NYSE–2001–33 pursuant to section 19(b)(1) of the Securities Exchange Act of 1934 (''Act'').[1] Notice of the proposal was published in the **Federal Register** on May 28, 2002.[2] One comment letter in support of the proposed rule change was received.[3] For the reasons discussed below, the Commission is granting approval of the proposed rule change.

I. Description

Over the years the NYSE has accommodated the market's desire to immobilize or dematerialize securities by amending its rules to provide alternatives to issuing physical certificates. For example, in 1988 the NYSE amended Section 501.02 of its Listed Company Manual (''Manual'') to allow the issuance of bonds on a book-entry-only basis by using global certificates held by a depository.[4] To further book-entry delivery and settlement of trades between brokers, the U.S. markets, including NYSE, adopted uniform rules in the 1990s that required securities listed on U.S. exchanges and securities associations to be depository-eligible[5] and that required members of exchanges and securities associations to settle trades in ''depository-eligible'' securities through book-entry movements at registered clearing agencies.[6] In 1996, the NYSE amended section 501.01 of the Manual to rescind its policy of requiring issuers to provide certificates to record holders with respect to distributions and instead allowed issuers to offer shareholders a choice of receiving certificates or holding their positions in book-entry form directly with the issuer through a direct registration system offered by a depository.[7]

In recent months, several non-U.S. issuers have approached the NYSE expressing an interest in listing their ordinary shares on the NYSE. These non-U.S. issuers would prefer or are required by home country law to issue in dematerialized format. In order for the NYSE to accommodate such non-U.S. issuers' need or preference to dematerialize or immobilize their shares, the exchange must amend its Manual.

Section 501 of the Manual sets out the certification requirements for stocks and bonds, including when certificates must be distributed and what form stock certificates must take. Section 501.01 of the Manual currently does not require a listed company to send stock certificates to a record holder unless the record holder requests one if (1) the stock distribution relates an issuance pursuant to a stock dividend reinvestment plan, stock dividend reinvestment purchase plan, or a similar stock purchase plan and (2) regardless of the nature of the distribution, the company's stock is included in DRS. Because a listed company has to send a record holder a certificate upon request, Section 501.01 did not afford the issuer the ability to completely dematerialize securities positions or immobilize securities positions where certificates would not be available to anyone other than the depository.

The rule change will amend Section 501.01 to allow a listed company to issue in a dematerialized or completely immobilized form and therefore not send stock certificates to record holders, provided the company's stock is issued pursuant to a dividend reinvestment program, stock purchase plan, or similar plan or is included in DRS.[8] The rule change will not mandate dematerialization or immobilization but rather will allow listed companies the option of issuing traditional stock certificates or not. Securities that have traditionally been issued in a dematerialized or completely immobilized form, such as bonds and derivatives, will continue to be covered by the specific rules applicable to them and will not be required to be in DRS.[9] Dematerialized or immobilized equities listed on the NYSE will continue to be subject to the requirement of Rules 226 and 227 that the issue must be depository eligible and must be settled

[1] 15 U.S.C. 78s(b)(1).

[2] Securities Exchange Act Release No. 45970, (May 21, 2000), 67 FR 102 (May 28, 2002).

[3] Letter from C. Michael Viviano, Chairman, Securities Industry Association, Operations Committee; Chairman and Chief Executive Officer, Bank of New York Clearing Services L.L.C. (June 4, 2002).

[4] Securities Exchange Act Release No. 25872 (June 30, 1988), 53 FR 25560 [File No. SR–NYSE–88–07] (order approving permitting the use of a single global certificate for bonds).

[5] NYSE Rule 227. Securities Exchange Act Release No. 35798 (June 1, 1995), 60 FR 30909 [File No. SR–NYSE–95–19] (order approving adopting of Rule 227 requiring issuers' shares to be depository eligible).

[6] NYSE Rule 226. Securities Exchange Act Release No. 32455 (June 11, 1993), 58 FR 33679 [File Nos. SR–AMEX–93–07; SR–BSE–93–08; SR–MSE–93–03; SR–NASD–93–11; SR–NYSE–93–13; SR–PSE–93–04; and SR–PHLX–93–09] (order approving SRO rules requiring book-entry settlement of securities transactions).

[7] Securities Act Release No. 37937 (November 8, 1996), 61 FR 58728 [File No. SR–NYSE–96–29] (order approving rule change requiring participation in a direct registration system for certain stock distributions). Using the direct registration system operated by The Depository Trust Company (''DRS''), an investor is able to hold a book-entry position on the books of the issuer, to update stock ownership information directly with an issuer's transfer agent, and to electronically transfer shares between the books of the issuer and his or her broker.

[8] Listed companies incorporated in states that require certification may not be able to issue their securities in an immobilized or dematerialized format.

[9] Sections 501.11 and 703.16 of the Manual respectively.

through book-entry movements at registered clearing agencies.

The NYSE believes the rule change recognizes the desirability of providing issuers with the efficiencies and safety of not issuing certificates while still providing shareholders with the ability to hold book-entry securities in their own name through DRS. The NYSE notes that the successful expansion of the DRS since its implementation in the mid-1990s should readily accommodate non-U.S. companies trading ordinary shares in this country.

The NYSE also believes that in accommodating the immobilization or dematerialization of common stock, it is aligning itself with the rules and policies of the other U.S. markets. The National Association of Securities Dealers Automated Quotations System (''Nasdaq'') does not have rules requiring certification or dictating the format of issues that are certificated. The American Stock Exchange (''Amex''), which had rules similar to the traditional NYSE rules, eliminated all those rules as part of a sweeping set of amendments intended to more closely align the Amex and the Nasdaq listing requirements following the acquisition of the Amex by the National Association of Securities Dealers (''NASD'') in 1998. As a result, both the Amex and Nasdaq are fully able to accommodate a listing applicant that wishes to immobilize or dematerialize their common stock.

II. Discussion

Section 6(b)(5) of the Act requires that the rules of an exchange are designed to remove impediments to and perfect the mechanisms of a free and open market and a national market system, and in general, to protect investors and the public interest.[10] For the reasons set forth below, the Commission believes that the NYSE's rule change is consistent with the exchange's obligations under the Act.

In an effort to facilitate a more efficient and secure marketplace, including the trading and clearance and settlement of securities transactions, the Commission encourages the use of alternatives to holding securities in certificated form. The Commission believes that use of certificates results in unacceptable delays and expenses in processing securities and securities transactions and raises safety concerns because of lost, stolen, or forged certificates. The difficulty with lost certificates was dramatically demonstrated during the September 11, 2001, tragedy when thousand of certificates were destroyed in vaults maintained by broker-dealers. Allowing NYSE listed companies to issue securities in a dematerialized or immobilized format should increase efficiencies and safety in both the trading and settling of securities. As a result, industry participants and investors should see reduced costs.

Furthermore, now that DRS is operational, investors have the ability to register their securities in their own name on the issuer's records and to efficiently transfer using book-entry movements their securities positions to their brokers. As the Securities Industry Association (''SIA'') noted in their comment letter supporting NYSE's rule change, DRS with the Profile System enhancement now provides equity securities a similar level of portability as other book-entry securities such as treasury securities, municipal bonds, mutual funds, and derivatives. Using DRS, an investor can register a position directly with the issuer and can electronically move the position to a broker of choice for disposition within the current settlement timeframes as well as any future shortened settlement cycle.

III. Conclusion

On the basis of the foregoing, the Commission finds that the proposed rule change is consistent with the requirements of the Act and in particular section 6 of the Act and the rules and regulations thereunder.

It is therefore ordered, pursuant to section 19(b)(2) of the Act, that the proposed rule change (File No. SR–NYSE–2001–33) be and hereby is approved.

For the Commission by the Division of Market Regulation, pursuant to delegated authority.[11]

Margaret H. McFarland,

Deputy Secretary.

[FR Doc. 02–19783 Filed 8–5–02; 8:45 am]

BILLING CODE 8010–01–P

[10] 15 U.S.C. 78(f).

[11] 17 CFR 200.30–3(a)(12).

DEPARTMENT OF STATE

[Public Notice 4079]

Culturally Significant Objects Imported for Exhibition Determinations: ''Magna Graecia: Greek Art From South Italy and Sicily''

AGENCY: Department of State.

ACTION: Notice.

SUMMARY: Notice is hereby given of the following determinations: Pursuant to the authority vested in me by the Act of October 19, 1965 [79 Stat. 985; 22 U.S.C. 2459], Executive Order 12047 of March 27, 1978, the Foreign Affairs Reform and Restructuring Act of 1998 [112 Stat. 2681, *et seq.*; 22 U.S.C. 6501 note, *et seq.*], Delegation of Authority No. 234 of October 1, 1999 [64 FR 56014], and Delegation of Authority No. 236 of October 19, 1999 [64 FR 57920], as amended, I hereby determine that the objects to be included in the exhibition, ''Magna Graecia: Greek Art from South Italy and Sicily,'' imported from abroad for temporary exhibition within the United States, are of cultural significance. These objects are imported pursuant to loan agreements with foreign lenders. I also determine that the exhibition or display of the exhibit objects at the Cleveland Museum of Art, Cleveland, Ohio, from on or about October 27, 2002, to on or about January 5, 2003, the Tampa Museum of Art, Tampa, Florida, from on or about February 2, 2003, to on or about April 20, 2003, and at possible additional venues yet to be determined, is in the national interest. Public Notice of these determinations is ordered to be published in the **Federal Register**.

FOR FURTHER INFORMATION CONTACT: For further information, including a list of exhibit objects, contact Paul W. Manning, Attorney-Adviser, Office of the Legal Adviser, 202/619–5997, and the address is United States Department of State, SA–44, Room 700, 301 4th Street, SW., Washington, DC 20547–0001.

Dated: July 26, 2002.

Miller Crouch,

Acting Assistant Secretary for Educational and Cultural Affairs, Department of State.

[FR Doc. 02–19837 Filed 8–6–02; 8:45 am]

BILLING CODE 4710–08–P

DEPARTMENT OF STATE

[Public Notice 4075] (TE)

Bureau of Consular Affairs; Certain Foreign Passports Validity

In accordance with section 212(a)(7)(B) of the Immigration and Nationality Act (8 U.S.C. 1182(a)(7)(B)), a nonimmigrant alien who makes an application for a visa or for admission into the United States is required to possess a passport that: (1) Is valid for a minimum of six months beyond the date of the expiration of the initial period of the alien's admission into the United States or contemplated initial period of stay and, (2) authorizes the alien to return to the country from which he or she came, or to proceed to

and enter some other country during such period. Because of the foregoing requirement, certain competent authorities have agreed that their passports will be recognized as valid for the return of the bearer for a period of six months beyond the expiration date specified in the passport, thereby effectively extending the validity period of the foreign passport an additional six months beyond its expiration date, *see* 22 CFR 41.104(b).

This public notice adds Bolivia and Latvia to the list of competent authorities that have provided the necessary assurances to the Government of the United States. The updated list of competent authorities which have made the necessary assurances is shown below:

Table of Foreign Passports Recognized for Extended Validity

Algeria
Antigua & Barbuda
Argentina
Australia
Austria
Bahamas, The
Bangladesh
Barbados
Belgium
Bolivia
Brazil
Canada
Chile
Colombia
Costa Rica
Cote D'Ivoire
Cuba
Cyprus
Czech Republic
Denmark
Dominica
Dominican Republic
Ecuador
Egypt
El Salvador
Ethiopia
Finland
France
Germany
Greece
Grenada
Guinea
Hong Kong (Certificates of identity & passports)
Hungary
Iceland
India
Ireland
Israel
Italy
Jamaica
Japan
Jordan
Korea
Kuwait
Laos
Latvia
Lebanon
Liechtenstein
Luxembourg
Macau
Madagascar
Malaysia
Malta
Mauritius
Mexico
Monaco
Netherlands
New Zealand
Nicaragua
Nigeria
Norway
Oman
Pakistan
Panama
Paraguay
Peru
Philippines
Poland
Portugal
Qatar
Russia
Senegal
Singapore
Slovak Republic
Slovenia
South Africa
Spain
Sri Lanka
St. Kitts & Nevis
St. Lucia
St. Vincent & The Grenadines
Sudan
Suriname
Sweden
Switzerland
Syria
Taiwan
Thailand
Togo
Trinidad & Tobago
Tunisia
Turkey
United Arab Emirates
United Kingdom
Uruguay
Venezuela
Zimbabwe

Public Notice 3562 of February 2, 2001, published at 66 FR 8836 is hereby superseded.

Dated: July 8, 2002.

Mary A. Ryan,

Asssistant Secretary for Consular Affairs, Department of State.

[FR Doc. 02–19836 Filed 8–5–02; 8:45 am]

BILLING CODE 4710–06–P

DEPARTMENT OF STATE

[Public Notice 4090]

United States—Egypt Science and Technology Joint Board Public Announcement of a Science and Technology Program for Competitive Grants to Support International, Collaborative Projects in Science and Technology Between U.S. and Egyptian Cooperators

August 4, 2002.

AGENCY: Department of State.

ACTION: Notice.

EFFECTIVE DATE: August 4, 2002.

FOR FURTHER INFORMATION, CONTACT: Joan Mahoney, Program Administrator, U.S.—Egypt Science and Technology Grants Program, U.S. Embassy, Cairo/ECPO, Unit 64900, Box 6, APO AE 09839–4900; phone: 011–(20–2) 797–2925; fax: 011–(20–2) 797–3150; e-mail: *mahoneyjm@state.gov.*

The 2002 Program Announcement, including proposal guidelines, will be available starting August 4, 2002 on the Joint Board web site: *http://www.usembassy.egnet.net/usegypt.joint-st.htm.*

SUPPLEMENTARY INFORMATION:

Authority: This program is established under 22 U.S.C. 2656d and the Agreement for Scientific and Technological Cooperation between the Government of the United States of America and the Government of the Arab Republic of Egypt. A solicitation for this program will begin August 1, 2002. This program will provide modest grants for successfully competitive proposals for binational collaborative projects and other activities submitted by U.S. and Egyptian experts. Projects must help the United States and Egypt utilize science and apply technology by providing opportunities to exchange ideas, information, skills, and techniques, and to collaborate on scientific and technological endeavors of mutual interest and benefit. Proposals which fully meet the submission requirements as outlined in the Program Announcement will receive peer reviews. Proposals considered for funding in Fiscal Year 2002 must be postmarked by November 1, 2002. All proposals will be considered; however, special consideration will be given to proposals that address priority areas defined/approved by the Joint Board. These include priorities in the areas of information technology, environmental technologies, biotechnology, energy, standards and metrology, and manufacturing technologies. More information on these priorities and

copies of the Program Announcement/Application may be obtained by request.

Dated: July 31, 2002.

Kay Anske,

Director, Office of Science and Technology Cooperation Bureau of Oceans and International Environmental and Scientific Affairs and, Chair, U.S.—Egypt S&T Joint Board, Department of State.

[FR Doc. 02–19838 Filed 8–5–02; 8:45 am]

BILLING CODE 4710–09–P

DEPARTMENT OF STATE

[Public Notice 4091]

United States—Egypt Science and Technology Joint Board; Public Announcement of a Science and Technology Program for Competitive Grants To Support Junior Scientist Development Visits by U.S. and Egyptian Scientists

August 11, 2002.

AGENCY: Department of State.

ACTION: Notice.

EFFECTIVE DATE: August 11, 2002.

FOR FURTHER INFORMATION, CONTACT: Joan Mahoney, Program Administrator, U.S.—Egypt Science and Technology Grants Program, U.S. Embassy, Cairo/ECPO, Unit 64900, Box 6, APO AE 09839–4900; phone: 011-(20–2) 797–2925; fax: 011-(20–2) 797–3150; e-mail: *mahoneyjm@state.gov.*.

The 2002 Program guidelines for Junior Scientist Development visits will be available starting August 11, 2002 on the Joint Board web site: *http://www.usembassy.egnet.net/usegypt.joint-st.htm.*

SUPPLEMENTARY INFORMATION: Authority: This program is established under 22 U.S.C. 2656d and the Agreement for Scientific and Technological Cooperation between the Government of the United States of America and the Government of the Arab Republic of Egypt.

A solicitation for this program will begin November 1, 2002. This program will provide modest grants for successfully competitive proposals for development visits by Junior American Scientists to Egypt; and Junior Egyptian Scientists to the United States. Applicants must be scientists who have received their PhD within the past ten years. Proposals considered for funding must be postmarked by December 13, 2002. All proposals, which fully meet the submission requirements, will be considered; however, special consideration will be given to proposals in the areas of Biotechnology, Standards and Metrology, Environmental Technologies, Energy, Manufacturing Technologies and Information Technology. More information on these priorities and copies of the Program Announcement/Application may be obtained request.

Dated: July 31, 2002.

Kay Anske,

Director, Office of Science and Technology Cooperation, Bureau of Oceans and International Environmental and Scientific Affairs, and, Chair, U.S.-Egypt S&T Joint Board, Department of State.

[FR Doc. 02–19839 Filed 8–5–02; 8:45 am]

BILLING CODE 4710–09–P

DEPARTMENT OF TRANSPORTATION

Coast Guard

[USCG–2002–12897]

Commercial Fishing Industry Vessel Advisory Committee; Correction

AGENCY: Coast Guard, DOT.

ACTION: Notice of meeting, correction of dates.

SUMMARY: The Coast Guard published a notice in the **Federal Register** of July 26, 2002 announcing a meeting of the Commercial Fishing Industry Vessel Advisory Committee (CFIVAC). The notice contained incorrect dates. This notice corrects those dates.

DATES: This correction is effective August 6, 2002. The CFIVAC will meet on Tuesday, August 20, 2002, from 9 a.m. to 5 p.m. and Wednesday, August 21, 2002, from 9 a.m. to 5 p.m.

FOR FURTHER INFORMATION CONTACT: Mr. Kevin Frost, Assistant to the CFIVAC Executive Director, telephone (202) 267–0315, fax (202) 267–0506.

SUPPLEMENTARY INFORMATION: The Coast Guard published a document in the **Federal Register** of July 26, 2002, (67 FR 48964) announcing a meeting of the Commercial Fishing Industry Vessel Advisory Committee (CFIVAC). We listed incorrect dates in the notice. This correction replaces the incorrect dates with the correct dates. The days of the week remain the same as do the non-meeting dates in the notice.

In notice FR Doc. 02–18915 published on July 26, 2002, (67 FR 48964) make the following correction. On page 48964, in the second column, starting on line 14, remove the first sentence in the DATES section, and, add in its place, the sentence ''CFIVAC will meet on Tuesday, August 20, 2002, from 9 a.m. to 5 p.m. and Wednesday, August 21, 2002, from 9 a.m. to 5 p.m.''

Dated: July 31, 2002.

Joseph J. Angelo,

Acting Assistant Commandant Marine Safety, Security and Environmental Protection.

[FR Doc. 02–19848 Filed 8–5–02; 8:45 am]

BILLING CODE 4910–15–P

DEPARTMENT OF TRANSPORTATION

Coast Guard

[USCG 2002–12973]

Guidelines for Assessing Merchant Mariners Through Demonstrations of Proficiency as Mate (Pilot) of Towing Vessels

AGENCY: Coast Guard, DOT.

ACTION: Notice of availability and request for public comments.

SUMMARY: The Coast Guard announces the availability of, and seeks public comments on, the national performance measures proposed here for use as guidelines when mariners demonstrate their proficiency as Mates (Pilots) of Towing Vessels. These measures were developed from recommendations and input provided by the Towing Safety Advisory Committee (TSAC).

DATES: Comments and related material must reach the Docket Management Facility on or before October 7, 2002.

ADDRESSES: Please identify your comments and related material by the docket number of this notice [USCG 2002–12973]. Then, to make sure they enter the docket only once, submit them by just one of the following means:

(1) By mail to the Docket Management Facility, U.S. Department of Transportation, room PL–401, 400 Seventh Street SW., Washington, DC 20590–0001.

(2) By delivery to room PL–401 on the Plaza level of the Nassif Building, 400 Seventh Street SW., Washington, DC, between 9 a.m. and 5 p.m., Monday through Friday, except Federal holidays. The telephone number is 202–366–9329.

(3) By fax to the Docket Management Facility at 202–493–2251.

(4) Electronically through the Web Site for the Docket Management System at *http://dms.dot.gov*.

The Docket Management Facility maintains the public docket for this Notice. Comments and related material received from the public, as well as documents mentioned in this Notice, will become part of this docket and will be available for inspection or copying at room PL–401 on the Plaza level of the Nassif Building, 400 Seventh Street SW., Washington, DC, between 9 a.m. and 5 p.m., Monday through Friday,

except Federal holidays. You may also find this docket on the Internet at *http://dms.dot.gov.*

The measures proposed here are also available from Mr. Gerald P. Miante, Assistant Executive Director of TSAC, Maritime Personnel Qualifications Division, Office of Operating and Environmental Standards, Room 1210 (G–MSO–1), U.S. Coast Guard Headquarters, 2100 Second Street SW., Washington, DC 20593–0001, telephone 202–267–0229, or e-mail address *gmiante@comdt.uscg.mil.*

FOR FURTHER INFORMATION CONTACT: For questions on this Notice or on the national performance measures proposed here, write, call or e-mail Mr. Miante where indicated under **ADDRESSES.** For questions on viewing or submitting material to the docket, call Ms. Dorothy Beard, Chief, Dockets, Department of Transportation, telephone 202–366–5149.

SUPPLEMENTARY INFORMATION:

What Action Is the Coast Guard Taking?

An interim rule on Licensing and Manning for Officers of Towing Vessels [USCG 1999–6224] appeared in the **Federal Register** on Thursday, April 26, 2001 [66 FR 20931]. It requires certain candidates for licenses as officers of towing vessels to hold completed Towing Officers' Assessment Records (TOARs). This is to ensure that these mariners attain the minimum standard of competence through demonstrations of their proficiency as Mates (Pilots) of Towing Vessels.

The Coast Guard charged the TSAC with creating first a list of tasks or duties that candidates should be able to perform, and, subsequently, recommending national performance measures for completing those tasks. The TSAC's License Implementation Work Group completed the list in early 2001, and this turned up as the ''TOAR'' in the Coast Guard's guidance document for the implementation of the new rules, Navigation and Inspection Circular (NVIC) 4–01, ''Licensing and Manning for Officers of Towing Vessels.'' Recently, the TSAC approved the Working Group's second effort, their recommendation of assessment criteria or performance measures that Designated Examiners (DEs) can use in judging candidates' execution of the required tasks.

The Coast Guard has reviewed the measures recommended by the TSAC. We are here presenting them for public comment on their suitability for use as guidelines in assessing proficiency.

The guidelines are set up as follows: First, the TOARs come in four varieties, according to the candidate's intended route or area of operation: Near-Coastal and Oceans, Great Lakes and Inland, Western Rivers, and Limited areas. Next, within each TOAR, we assign a letter to each of a series of main tasks or duties. Then we assign a number to each of several sub-tasks under these, indicate whether each sub-task is common to all routes, and finally set forth particular performance measures.

For example, in the TOAR for Near-Coastal and Oceans, main task or duty ''D'' is ''Maneuvering'' and sub-task D–1 directs the candidate to ''Maneuver a light boat.'' An ''X'' evident in the second column indicates that this sub-task applies to all candidates for all TOARs.

Under the name of sub-task D–1, we instruct the DE generally to ''Have the mariner demonstrate the ability to safely navigate the vessel in the following scenarios:''

One of these scenarios is ''Landing'', with the Performance Standard that ''the mariner land safely on a vessel and dock, both with and against the current'' and ''[e]nsure that the mariner maintain a safe speed with no headway or excess momentum at the moment of contact.''

If the mariner properly meets all of the Performance Standards, he or she passes the practical demonstration. If he or she fails to properly carry out any of the Performance Standards, he or she fails it.

Why Is the Coast Guard Taking This Action?

The Coast Guard is taking this action to comply with the interim rule on towing officers published in 2001. To act as a DE and determine whether a candidate has successfully completed the required demonstrations, the would-be DE must himself or herself be approved by the Coast Guard's National Maritime Center (NMC), and also have relevant experience in the task(s) being demonstrated, have read a guidance document for assessors published by the Coast Guard at *http://www.uscg.mil/NMC/assessorman.pdf,* and employ a set of approved assessment criteria. These versions of the TOARs should fulfill this last condition.

How May I Participate in This Action?

You may participate in this action by submitting comments and related material on the national performance measures proposed here. These measures are available on the Internet at *http://dms.dot.gov,* under this docket number [USCG 2002–12973]. They are also available from Mr. Miante where indicated under **ADDRESSES.** If you submit written comments please include—

- Your name and address;
- The docket number for this Notice [USCG 2002–12973];
- The specific section of the performance measures to which each comment applies; and
- The reason for each comment.

You may mail, deliver, fax, or electronically submit your comments and related material to the Docket Management Facility, using an address or fax number listed in **ADDRESSES.** Please do not submit the same comment or material more than once. If you mail or deliver your comments and material, they must be on 8½-by-11-inch paper, and the quality of the copy should be clear enough for copying and scanning. If you mail your comments and material and would like to know whether the Facility received them, please enclose a stamped, self-addressed postcard or envelope. The Coast Guard will consider all comments and material received during the 60-day comment period.

Once we have considered all comments and related material, we will publish a final version of the national performance measures for use as guidelines by the general public. Individuals and institutions assessing the competence of mariners may refine the final version of these measures and develop innovative alternatives. If you vary from the final version of these measures, however, you must submit your alternative to the National Maritime Center for approval by the Coast Guard under 46 CFR 10.303(e) before you use it as part of an approved course or training program.

Dated: July 30, 2002.

Joseph J. Angelo,

Director of Standards, Marine Safety, Security & Environmental Protection.

[FR Doc. 02–19845 Filed 8–5–02; 8:45 am]

BILLING CODE 4910–15–P

DEPARTMENT OF TRANSPORTATION

Federal Aviation Administration

[Summary Notice No. PE–2002–48]

Petitions for Exemption; Summary of Petitions Received

AGENCY: Federal Aviation Administration (FAA), DOT.

ACTION: Notice of petition for exemption received.

SUMMARY: Pursuant to FAA's rulemaking provisions governing the application, processing, and disposition of petitions

for exemption, part 11 of Title 14, Code of Federal Regulations (14 CFR), this notice contains a summary of a certain petition seeking relief from specified requirements of 14 CFR. The purpose of this notice is to improve the public's awareness of, and participation in, this aspect of FAA's regulatory activities. Neither publication of this notice nor the inclusion or omission of information in the summary is intended to affect the legal status of any petition or its final disposition.

DATES: Comments on petitions received must identify the petition docket number involved and must be received on or before August 26, 2002.

ADDRESSES: Send comments on the petition to the Docket Management System, U.S. Department of Transportation, Room Plaza 401, 400 Seventh Street, SW., Washington, DC 20590–0001. You must identify the docket number FAA–2002–12573 at the beginning of your comments. If you wish to receive confirmation that the FAA received your comments, include a self-addressed, stamped postcard.

You may also submit comments through the Internet to *http://dms.dot.gov.* You may review the public docket containing the petition, any comments received, and any final disposition in person in the Dockets Office between 9 a.m. and 5 p.m., Monday through Friday, except Federal holidays. The Dockets Office (telephone 1–800–647–5527) is on the plaza level of the NASSIF Building at the Department of Transportation at the above address. Also, you may review public dockets on the Internet at *http://dms.dot.gov.*

FOR FURTHER INFORMATION CONTACT: Susan Boylon (425–227–1152), Transport Airplane Directorate (ANM–113), Federal Aviation Administration, 1601 Lind Ave SW., Renton, WA 98055–4056; or Vanessa Wilkins (202–267–8029), Office of Rulemaking (ARM–1), Federal Aviation Administration, 800 Independence Avenue, SW., Washington, DC 20591.

This notice is published pursuant to 14 CFR 11.85 and 11.91.

Issued in Washington, DC, on August 1, 2002.

Donald P. Byrne,

Assistant Chief Counsel for Regulations.

Petitions for Exemption

Docket No.: FAA–2002–12573.

Petitioner: Air Shamrock, Inc.

Section of 14 CFR Affected: 14 CFR 25.562.

Description of Relief Sought: Relief from the 16g seat requirements for 6 passenger seats installed in the main cabin area of a BBJ Boeing Model 737–700 IGW airplane.

[FR Doc. 02–19852 Filed 8–5–02; 8:45 am]

BILLING CODE 4910–13–P

DEPARTMENT OF TRANSPORTATION

Federal Aviation Administration

Notice of Intent to Rule on Application (02–05–C–00–SLC) To Impose and Use a Passenger Facility Charge (PFC) at Salt Lake City International Airport Submitted by the Salt Lake City Department of Airports, Salt Lake City, Utah

AGENCY: Federal Aviation Administration (FAA), DOT.

ACTION: Notice of Intent to Rule on Application.

SUMMARY: The FAA proposes to rule and invites public comment on the application to impose and use PFC revenue at Salt Lake City International Airport under the provisions of 49 U.S.C. 40117 and part 158 of the Federal Aviation Regulations (14 CFR 158).

DATES: Comments must be received on or before September 5, 2002.

ADDRESSES: Comments on this application may be mailed or delivered in triplicate to the FAA at the following address: Mr. Alan E. Wiechmann, Manager; Denver Airports District Office, DEN–ADO, Federal Aviation Administration; 26805 East 68th Avenue, Suite 224, Denver, Colorado 80249.

In addition, one copy of any comments submitted to the FAA must be mailed or delivered to Mr. Timothy L. Campbell, Executive Director, at the following address; Salt Lake City Department of Airports, 776 N. Terminal Dr., TUI, Suite 250, Salt Lake City, Utah 84122.

Air Carriers and foreign air carriers may submit copies of written comments previously provided to Salt Lake City International Airport, under section 158.23 of part 158.

FOR FURTHER INFORMATION CONTACT: Mr. Christopher J. Schaffer, (303) 342–1258, 26805 East 68th Avenue, Suite 224, Denver, Colorado 80249. The application may be reviewed in person at this same location.

SUPPLEMENTARY INFORMATION: The FAA proposes to rule and invites public comment on the application 02–05–C–00–SLC to impose and use PFC revenue at Salt Lake City International Airport, under the provisions of 49 U.S.C. 40117 and part 158 of the Federal Aviation Regulations (14 CFR part 158).

On July 30, 2002, the FAA determined that the application to impose and use the revenue from a PFC submitted by the Salt Lake City Department of Airports, Salt Lake City, Utah, was substantially complete within the requirements of section 158.25 of part 158. The FAA will approve or disapprove the application, in whole or in part, not later than October 31, 2002.

The following is a brief overview of the application.

Level of the proposed PFC: $4.50.

Proposed charge effective date: February 1, 2003.

Proposed charge expiration date: October 1, 2003.

Total requested for use approval: $19,421,900.

Brief description of proposed projects:

Project 1: Airfield Improvement Projects

1.1 Concourse A Apron Expansion
1.2 Concourse A Apron Reconstruction Phase I
1.3 Concourse A Apron Reconstruction Phase II
1.4 Deicing Lagoon Upgrade
1.5 East Side Oil/Water Separator
1.6 East Apron Rehabilitation Phase II
1.7 East Apron Rehabilitation Phase III
1.8 SIDA Perimeter Patrol Road Phase II
1.9 SIDA Perimeter Patrol Road Phase III
1.10 Taxiway H. Reconstruction H10—H12
1.11 Taxiway H Reconstruction H7—H10
1.12 Surface Condition Analyzer Upgrade
1.13 Airport II Runway Overlay
1.14 Runway 16/34 Widening and Extension at Tooele Valley

Project 2: Terminal Improvement Projects

2.1 TU–2 Checked Baggage and Screening Checkpoint Queuing Modifications
2.2 EVIDS Installation
2.3 Concourse E SkyWest Interim Facility

Project 3: Miscellaneous Projects

3.1 Land Acquisition for Approach Protection and Noise Compatibility Phase I
3.2 Terminal Roadway Security Improvements Phase II
3.3 ALP/Environmental Update Phase I

Class or classes of air carriers, which the public agency has requested not be required to collect PFC's: All air taxi/commercial operators filing or required to file FAA Form 1800–31.

Any person may inspect the application in person at the FAA office

listed above under **FOR FURTHER INFORMATION CONTACT** and at the FAA Regional Airports Office located at: Federal Aviation Administration, Northwest Mountain Region, Airports Division, ANM–600, 1601 Lind Avenue SW., Suite 315, Renton, WA 98055–4056.

In addition, any person may, upon request, inspect the application, notice and other documents germane to the application in person at Salt Lake City International Airport.

Issued in Renton, Washington on July 30, 2002.

David A. Field,

Manager, Planning, Programming and Capacity Branch, Northwest Mountain Region.

[FR Doc. 02–19853 Filed 8–5–02; 8:45 am]

BILLING CODE 4910–13–M

DEPARTMENT OF TRANSPORTATION

Federal Aviation Administration

Notice of Intent To Rule on Application (#02–01–C–00–WRL) To Impose and To Use a Passenger Facility Charge (PFC) at the Worland Municipal Airport, Submitted by the City of Worland, WY

AGENCY: Federal Aviation Administration (FAA), DOT.

ACTION: Notice of intent to rule on application.

SUMMARY: The FAA proposes to rule and invites public comment on the application to impose and to use a PFC at the Worland Municipal Airport under the provisions of 49 U.S.C. 40117 and part 158 of the Federal Aviation Regulations (14 CFR 158).

DATES: Comments must be received on or before September 5, 2002.

ADDRESSES: Comments on this application may be mailed or delivered in triplicate to the FAA at the following address: Alan Wiechmann, Manager, Denver Airports District Office, DEN–ADO; Federal Aviation Administration; 26805 E. 68th Avenue, Suite 224; Denver, CO 80249–6361.

In addition, one copy of any comments submitted to the FAA must be mailed or delivered to Mr. Gary J. Thompson, Airport Manager, at the following address: Worland Municipal Airport, PO Box 606, Worland, Wyoming 82401.

Air Carriers and foreign air carriers may submit copies of written comments previously provided to the City of Worland, under section 158.23 of Part 158.

FOR FURTHER INFORMATION CONTACT: Mr. Christopher Schaffer, (303) 342–1258; Denver Airports District Office, DEN–ADO; Federal Aviation Administration; 26805 E. 68th Avenue, Suite 224; Denver, CO 80249–6361. The application may be reviewed in person at this same location.

SUPPLEMENTARY INFORMATION: The FAA proposes to rule and invites public comment on the application (02–01–C–00–WRL) to impose and to use a PFC at the Worland Municipal Airport, under the provisions of 49 U.S.C. 40117 and part 158 of the Federal Aviation Regulations (24 CFR part 158).

On July 30, 2002, the FAA determined that the application to impose and to sue a PFC submitted by the City of Worland, Wyoming, was substantially complete within the requirements of section 158.25 of part 158. The FAA will approve or disapprove the application, in whole or in part, no later than November 5, 2002.

The following is a brief overview of the application.

Level of the proposed PFC: $4.50.

Proposed charge effective date: October 1, 2002.

Proposed charge expiration date: October 1, 2026.

Total requested for use approval: $334,250.00.

Brief description of proposed projects: Rehabilitate and shift Runway 16/34; Preliminary design engineering for runway extension, road and canal relocation; Acquisition of land for runway extension and land use protection; and Relocation of obstructions.

Class or classes of air carriers, which the public agency has requested not be required to collect PFC's: None.

Any person may inspect the application in person at the FAA office listed above under **FOR FURTHER INFORMATION CONTACT** and at the FAA Regional Airports Office located at: Federal Aviation Administration, Northwest Mountain Region, Airports Division, ANM–600, 1601 Lind Avenue SW., Suite 315, Renton, WA 98055–4056.

In addition, any person may, upon request, inspect the application, notice and other documents germane to the application in person at the Worland Municipal Airport.

Issued in Renton, Washington on July 30, 2002.

David A. Field.

Manager, Planning, Programming and Capacity Branch, Northwest Mountain Region.

[FR Doc. 02–19854 Filed 8–5–02; 8:45 am]

BILLING CODE 4910–13–M

DEPARTMENT OF TRANSPORTATION

Federal Highway Administration

[Docket No. FHWA–2002–12971

Agency Information Collection Activities; Request for Comments; Clearance of a New Information Collection; Survey of Drivers' Attitudes on Speeding and Speed Limits

AGENCY: Federal Highway Administration (FHWA), DOT.

ACTION: Notice and request for comments.

SUMMARY: The FHWA invites public comments about our intention to request the Office of Management and Budget's (OMB) approval for a new information collection that involves drivers' attitudes on speeding and speed limits. We are required to publish this notice in the **Federal Register** by the Paperwork Reduction Act of 1995.

DATES: Please submit comments by October 7, 2002.

ADDRESSES: You may mail or hand deliver comments to the U.S. Department of Transportation, Dockets Management Facility, Room PL–401, 400 Seventh Street, SW., Washington, DC 20590; telefax comments to 202/493–2251; or submit electronically at *http://dmses.dot.gov/submit.* All comments should include the docket number in this notice's heading. All comments may be examined and copied at the above address from 9 a.m. to 5 p.m., Monday through Friday, except Federal holidays. If you desire a receipt you must include a self-addressed stamped envelope or postcard or, if you submit your comments electronically, you may print the acknowledgment page.

FOR FURTHER INFORMATION CONTACT: Ms. Elizabeth Alicandri, 202–366–6409, Office of Highway Safety, Federal Highway Administration, Department of Transportation, 400 Seventh Street, SW., Washington, DC 20590. Office hours are from 7 a.m. to 3:30 p.m., Monday through Friday, except Federal holidays.

SUPPLEMENTARY INFORMATION:

Title: Survey on Drivers' Attitudes on Speeding and Speed Limits.

OMB Control No: New.

Background: The FHWA plans to enter into a cooperative agreement with the State of Massachusetts to initiate a project entitled ''Demonstration and Evaluation of Rational Speed Limits'', to be performed by the Governor's Highway Safety Bureau of the Commonwealth of Massachusetts. As part of this cooperative agreement,

information on local drivers' attitudes towards speeding, speed limits and enforcement will be gathered through a survey. A survey will be performed both before and after engineering, enforcement and educational measures to reduce speeding are implemented. The information obtained from the survey will help the FHWA understand the effectiveness of the measures and the drivers' responses to them. The responses to the survey will be voluntary and will not involve information that is required by regulations. There will be no direct costs to the respondents other than their time.

Respondents: General public.

Frequency: Data will be collected before and after engineering, enforcement and educational measures to reduce speeding are implemented.

Estimated Total Annual Burden Hours: The burden hours per response will be approximately 10 minutes. We estimate that a total of 800 drivers (400 ''before'' and 400 ''after'') will be involved in the survey. Therefore, the total estimate is 134 burden hours.

Public Comments Invited: You are asked to comment on any aspect of this information collection, including: (1) Whether the proposed collection is necessary for the FHWA's performance; (2) the accuracy of the estimated burdens; (3) ways for the FHWA to enhance the quality, usefulness, and clarity of the collected information; and (4) ways that the burdens could be minimized, including use of electronic technology, without reducing the quality of the collected information. The agency will summarize and/or include your comments in the request for OMB's clearance of this information collection.

Electronic Access: Internet users may access all comments received by the U.S. DOT Dockets, Room PL–401, by using the universal resource locator (URL): *http://dms.dot.gov.* It is available 24 hours each day, 365 days each year. Please follow the instructions online for more information and help. An electronic copy of this document may be downloaded using a modem and suitable communications software from the Government Printing Office Electronic Bulletin Board Service at telephone number 202–512–1661. Internet users may reach the **Federal Register** home page at *http://www.nara.gov/fedreg* and the Government Printing Office's database at *http://www.access.gpo.gov/nara.*

Authority: The Paperwork Reduction Act of 1995; 44 U.S.C. chapter 35, as amended; and 49 CFR 1.48.

Issued on: July 31, 2002.

James R. Kabel,

Chief, Management Programs and Analysis Division.

[FR Doc. 02–19790 Filed 8–5–02; 8:45 am]

BILLING CODE 4910–22–P

DEPARTMENT OF TRANSPORTATION

National Highway Traffic Safety Administration

[Docket No. NHTSA–2002–12937]

Notice of Tentative Decision That Certain Nonconforming Vehicles Are Eligible for Importation

AGENCY: National Highway Traffic Safety Administration, DOT.

ACTION: Request for comments on tentative decision that certain nonconforming vehicles are eligible for importation.

SUMMARY: This notice requests comments on a tentative decision by the National Highway Traffic Safety Administration (NHTSA) that certain vehicles that do not comply with all applicable Federal motor vehicle safety standards, but that are certified by their original manufacturer as complying with all applicable Canadian motor vehicle safety standards, are eligible for importation into the United States. The vehicles in question either (1) are substantially similar to vehicles that were certified by their manufacturers as complying with the U.S. safety standards and are capable of being readily altered to conform to those standards, or (2) have safety features that comply with, or are capable of being altered to comply with, all U.S. safety standards.

DATE: The closing date for comments on this tentative decision is September 5, 2002.

ADDDRESS: Comments should refer to the docket number and notice number, and be submitted to: Docket Management, Room PL–401, 400 Seventh St., SW., Washington, DC 20590. [Docket hours are from 9 am to 5 pm].

FOR FURTHER INFORMATION CONTACT: Luke Loy, Office of Vehicle Safety Compliance, NHTSA (202–366–5308).

SUPPLEMENTARY INFORMATION:

Background

Under 49 U.S.C. 30141(a)(1)(A), a motor vehicle that was not originally manufactured to conform to all applicable Federal motor vehicle safety standards (FMVSS) shall be refused admission into the United States unless NHTSA has decided, either pursuant to a petition from the manufacturer or registered importer or on its own initiative, that the motor vehicle (1) is substantially similar to a motor vehicle of the same model year that was originally manufactured for importation into and sale in the United States and certified by its manufacturer as complying with all applicable FMVSS, and (2) is capable of being readily altered to conform to all applicable FMVSS. Where there is no substantially similar U.S.-certified motor vehicle, 49 U.S.C. 30141(a)(1)(B) permits a nonconforming motor vehicle to be admitted into the United States if its safety features comply with, or are capable of being altered to comply with, all applicable FMVSS based on destructive test data or such other evidence as NHTSA decides to be adequate.

Most Recent Decision

On May 13, 1997, NHTSA published a notice in the **Federal Register** at 62 FR 26348 announcing that it had made a decision on its own initiative that certain motor vehicles that do not comply with all applicable FMVSS, but that are certified by their original manufacturer as complying with all applicable Canadian motor vehicle safety standards (CMVSS), are eligible for importation into the United States. The notice identified these vehicles as:

(a) All passenger cars manufactured on or after September 1, 1996 and before September 1, 2002, that, as originally manufactured, are equipped with an automatic restraint system that complies with Federal Motor Vehicle Safety Standard (FMVSS) No. 208, and that comply with FMVSS No. 214;

(b) All multipurpose passenger vehicles, trucks and buses manufactured on or after September 1, 1993, and before September 1, 1998, that, as originally manufactured, comply with FMVSS Nos. 202, 208, and 216; and

(c) All multipurpose passenger vehicles, trucks and buses manufactured on or after September 1, 1998, and before September 1, 2002, that, as originally manufactured, comply with FMVSS Nos. 202, 208, 214, and 216.

Existing Cut-Off Date

In the notice of tentative decision that preceded this final decision, published on March 7, 1997 at 62 FR 10614, NHTSA announced its intention to limit all previously open-ended import eligibility decisions for Canadian-certified passenger cars, multipurpose passenger vehicles (MPVs), trucks, and buses to such vehicles manufactured before September 1, 2002. The agency

explained that it had selected that date because it is the one ''on which revised interior impact protection requirements that are to be phased in under FMVSS No. 201, *Occupant Protection in Interior Impact,* and that are not found in the corresponding CMVSS, will become effective for all passenger cars and for MPVs, trucks, and buses with a GVWR of 10,000 pounds or less.'' *See* 62 FR 10616. The agency stated its intention ''to issue new decisions covering vehicles manufactured on or after September 1, 2002 within a sufficient period before that date is reached.'' *Id.*

Outstanding Compliance Issues

In addressing one of the comments submitted on the notice of tentative decision, the agency stated in the notice of final decision that if Canada should ''adopt the revised interior impact protection requirements that are to be phased in under FMVSS No. 201 by September 1, 2002, there will be no need for compliance with this standard to be made a specific condition for import eligibility.'' *See* 62 FR 26350. The FMVSS No. 201 requirements that were the subject of the phase-in were for upper interior occupant protection. Canada has not adopted these requirements. Since complex modifications may be required to bring a vehicle into conformity with the FMVSS No. 201 upper interior impact requirements, NHTSA is reluctant to make a blanket import eligibility decision for Canadian-certified vehicles that do not meet these requirements. The capability of any particular make and model vehicle to be conformed to the upper interior impact requirements should be assessed by the agency on a case-by-case basis, through its consideration of individual import eligibility petitions.

Another standard that will become effective for all U.S.-certified passenger cars on September 1, 2002 is FMVSS No. 401, *Interior Trunk Release.* Canada has not adopted a similar standard. Because complex modifications may also be required in some vehicles to achieve conformity with the requirements of this standard, particularly if the trunk compartment is situated in the front of the vehicle, NHTSA is also reluctant to make a blanket import eligibility decision for Canadian-certified vehicles that do not meet these requirements.

Lastly, there are requirements for the lower anchorages of child restraint anchorage systems under FMVSS No. 225, *Child Restraint Anchorage Systems,* which have not been adopted by Canada. In light of these differences, NHTSA is reluctant to make a blanket import eligibility decision for Canadian-certified vehicles that do not meet these requirements. FMVSS No. 225 applies to passenger cars, to trucks and MPVs with a GVWR of 3,855 kg (8,500 lb) or less, except walk-in van-type vehicles and vehicles manufactured to be sold exclusively to the U.S. Postal Service, and to buses (including school buses) with a GVWR of 4,536 kg (10,000 lb) or less, except shuttle buses.

As a consequence, the agency has tentatively decided to require, as a condition for import eligibility, that Canadian-certified passenger cars manufactured on or after September 1, 2002 comply, as originally manufactured, with FMVSS Nos. 201, 225, and 401. In addition, we have tentatively decided to require, as a condition for import eligibility, that Canadian-certified MPVs, trucks, and buses with a gross vehicle weight rating (GVWR) of 10,000 pounds or less manufactured on or after September 1, 2002 comply, as originally manufactured, with FMVSS No. 201 and, insofar as it is applicable, with FMVSS No. 225.

Future Cut-off Date

To avoid the need to amend any existing eligibility decisions in the event that there are any further requirements imposed under the FMVSS that are not carried into the corresponding CMVSS, NHTSA has tentatively decided to limit its import eligibility decisions for Canadian-certified passenger cars and for MPVs, trucks, and buses with a GVWR of 10,000 pounds or less to such vehicles manufactured before September 1, 2007. Prior to that date, the agency will assess whether there is a need to condition the import eligibility of any subsequently manufactured Canadian-certified vehicles on compliance with any additional FMVSS. The agency intends to issue new decisions covering vehicles manufactured on or after September 1, 2007 within a sufficient period before that date is reached.

Tentative Decisions

Pending its review of any comments submitted in response to this notice, NHTSA hereby tentatively decides that:

(a) All passenger cars manufactured on or after September 1, 2002 and before September 1, 2007, that, as originally manufactured, are equipped with an automatic restraint system that complies with Federal Motor Vehicle Safety Standard (FMVSS) No. 208, and that comply with FMVSS No. 201, 214, 225, and 401; and

(b) All multipurpose passenger vehicles, trucks and buses with a GVWR of 4,535 kg (10,000 lb) or less that were manufactured on or after September 1, 2002, and before September 1, 2007, and that, as originally manufactured, comply with FMVSS Nos. 201, 202, 208, 214, and 216, and, insofar as it is applicable, with FMVSS No. 225;

that are certified by their original manufacturer as complying with all applicable Canadian motor vehicle safety standards, are eligible for importation into the United States on the basis that either:

1. They are substantially similar to vehicles of the same make, model, and model year originally manufactured for importation into and sale in the United States, or originally manufactured in the United States for sale therein, and certified as complying with all applicable FMVSS, and are capable of being readily altered to conform to all applicable FMVSS, or

2. They have safety features that comply with, or are capable of being altered to comply with, all applicable FMVSS.

Vehicle Eligibility Number

The importer of a vehicle admissible under any final decision must indicate on the form HS–7 accompanying entry the appropriate vehicle eligibility number indicating that the vehicle is eligible for entry. Vehicle eligibility number VSA–80 is currently assigned to Canadian-certified passenger cars and vehicle eligibility number VSA–81 is currently assigned to Canadian-certified MPVs, trucks, and buses with a GVWR of 4,536 kg (10,000 lb) or less. If this tentative decision is made final, all passenger cars admissible under that decision will be assigned vehicle eligibility number VSA–80, and all MPVs, trucks, and buses admissible under that decision will be assigned vehicle eligibility number VSA–81.

Comments

Section 30141(b) of Title 49, U.S. Code requires NHTSA to provide a minimum period for public notice and comment on decisions made on its own initiative consistent with ensuring expeditious, but full consideration and avoiding delay by any person. NHTSA believes that a comment period of 30 days is appropriate for this purpose. Interested persons are invited to submit comments on the tentative decision described above. Comments should refer to the docket number and be submitted to: Docket Management, Room PL–401, 400 Seventh St., SW, Washington, DC 20590. [Docket hours are from 9 am to 5 pm]. It is requested, but not required, that 10 copies be submitted. Alternatively, you may submit your

comments electronically by logging onto the Docket Management System (DMS) website at *http://dms.dot.gov.* Click on ''Help & Information'' of ''Help/Info'' to view instructions for filing your comments electronically.

All comments received before the close of business on the closing date indicated above will be considered, and will be available for examination in the docket at the above address both before and after that date. To the extent possible, comments filed after the closing date will also be considered. Notice of NHTSA's final decision will be published in the **Federal Register** pursuant to the authority indicated below.

Authority: 49 U.S.C. 30141(a)(1)(A), (a)(1)(B), and (b)(1); 49 CFR 593.8; delegation of authority at 49 CFR 1.50.

Issued on: August 1, 2002.

Jeffrey W. Runge,

Administrator.

[FR Doc. 02–19842 Filed 8–5–02; 8:45 am]

BILLING CODE 4910–59–P

DEPARTMENT OF TRANSPORTATION

National Highway Traffic Safety Administration

Denial of Petition for Rulemaking; Code of Federal Regulations

AGENCY: National Highway Traffic Safety Administration (NHTSA) Department of Transportation.

ACTION: Denial of petition for rulemaking.

SUMMARY: This document denies the petition submitted by Nicholas Bromer to amend the Code of Federal Regulations to require vehicles to be equipped with vehicle identification number-encoded brake and/or rear running lamps to assist law enforcement in more accurately identifying motor vehicles and in combating vehicle theft.

FOR FURTHER INFORMATION CONTACT: Ms. Rosalind Proctor, Office of Safety Performance Standards, NHTSA, 400 Seventh Street, SW., Washington, DC 20590. Ms. Proctor's telephone number is (202) 366–4807. Her facsimile number is (202) 493–2290.

SUPPLEMENTARY INFORMATION:

The Petition

By letter dated December 3, 2001, Nicholas Bromer petitioned the agency to amend the Code of Federal Regulations (CFR) to require that brake and/or running lamps for vehicles be equipped with flickering, red, light-emitting diodes (LEDs) encoded with the vehicle identification number (VIN) or a derivative of the VIN to assist law enforcement in the accurate identification of vehicles from any distance. Mr. Bromer did not identify the regulation within the CFR he was petitioning the agency to amend.

Mr. Bromer's idea is that, once a vehicle is reported stolen, its VIN would be put into a database. Automatic scanners placed on the roadside or on overpasses would check each passing vehicle against a list of stolen or wanted vehicles. Simultaneously, law enforcement authorities would be alerted. The LEDs would radiate the VIN in a binary digital format, rapidly turning on and off and capable of flickering out a complete VIN in a thousandth of a second. The petitioner asserted that the flickering would be invisible to the human eye and would slightly decrease the brightness of the brake or running lights. A light-sensing detector, aimed at the flickering lamp can read the VIN. The system will sort out the flickering light patterns from background noise, decode the flickering and access a databank. According to the petitioner, intermittent flickering, flickers from two different vehicles, both in a group of vehicles in optical range of a detector are unlikely to overlap, thus allowing the identification of both vehicles. Because flickering a complete VIN only takes a thousandth of a second, the flicker repetition interval can be much longer than that, while still insuring that there are plenty of flickers from each vehicle for the detector to register. Therefore, a detector can easily read the VINs of a large group of vehicles flickering simultaneously. The petitioner also asserted that because the brakes or running lamps would only flicker for a small proportion of time, its brightness would only be slightly decreased, by about 1 percent.

The Bromer system allows augmented VINs with at least one secret character or numeral. The VIN plate, vehicle title, and other public records would omit the secret portion of the VIN, which would be kept in a central databank. When a complete VIN is sent to the database, the incoming identifier would be checked against a secret database. The database response would read either ''authentic'' or ''fake''.

The petitioner suggests that the system could be used to record all vehicles that have entered a building or area, or that law enforcement could use it to determine the history of any vehicle prior to making contact with the driver. The petitioner even states that owner information such as the owner's criminal record could also be made available.

Background

Since Mr. Bromer's request for amending the CFR did not identify a particular regulation, the agency believes that there are three regulations that may be relevant to his petition. Those applicable regulations are: 49 CFR Part 541, *Federal Motor Vehicle Theft Prevention Standard;* Federal Motor Vehicle Safety Standard (FMVSS) No. 114, *Theft Protection;* and FMVSS No. 108, *Lamps, Reflective Devices, and Associated Equipment.* In addition, there is the possibility that the agency could issue a new FMVSS.

Agency Analysis

In 1984, Congress enacted the Motor Vehicle Theft Law Enforcement Act (the 1984 Theft Act) in response to escalating motor vehicle thefts (Pub. L. 98–547). The 1984 Theft Act was designed to reduce the incidence of motor vehicle thefts and simplify the tracing and recovery of parts from stolen vehicles. The 1984 Theft Act directed NHTSA to issue a theft prevention standard requiring vehicle manufacturers to mark major parts of high-theft passenger car lines with identifying numbers or symbols. The 1984 Theft Act is codified at 49 U.S.C. 33101. Under 49 U.S.C. Chapter 331, *Theft Prevention,* NHTSA has the authority to develop standards to reduce the incidence of motor vehicle theft. NHTSA issued the Federal Motor Vehicle Theft Prevention Standard, 49 CFR part 541 (50 FR 43166, October 24, 1985). The standard applies only to those motor vehicle lines that the agency has designated as high-theft. Manufacturers of these high-theft passenger motor vehicle lines must mark the certain ''major parts'' in those lines with the vehicle identification number (VIN). Subsequently, Congress enacted the Anti Car Theft Act of 1992 (the 1992 Theft Act). The 1992 Theft Act (59 FR 64164, December 13, 1994) extended the parts marking requirements to multipurpose passenger vehicles (MPVs) (i.e., passenger vans and sports utility vehicles) and light trucks (pickup trucks) with a gross vehicle weight rating (GVWR) of 6,000 pounds or less that NHTSA designated as high-theft. The 1992 Theft Act also extended the parts marking requirements to selected motor vehicle lines that were below the 1990/1991 median theft rate. However, neither Act provides NHTSA with the authority to mandate that a manufacturer be required to use a particular parts marking system such as that suggested by Mr. Bromer, on its motor vehicle lines.

Under 49 U.S.C. Chapter 301, *Motor Vehicle Safety,* NHTSA has the authority to develop standards to reduce the incidence of crashes, and deaths and injuries resulting from crashes. FMVSS No.114, *Theft Protection,* specifies requirements to reduce the incidence of crashes that result from unauthorized use of a motor vehicle. The standard accomplishes this by requiring that vehicles be equipped with a system to warn the driver/operator when his/her keys are left in the ignition and the door is opened. This warning serves as a reminder to the owner operator to remove his or her keys, consequently protecting the vehicle from unauthorized use. In contrast, the goal of the petitioner's system is to identify stolen vehicles for purposes of recovery.

FMVSS No. 108, *Lamps, Reflective Devices and Associated Equipment,* specifies requirements to reduce the incidence of crashes through the use of exterior vehicle lighting devices. The standard accomplishes this by setting performance and installation requirements for such devices and motor vehicles so that the vehicles are conspicuous, that the roadway is illuminated, and that important information about drivers' intentions are signaled to other drivers.

For the Bromer system to be effective, the stop and/or taillamps would need to be on all the time. Under current Federal lighting requirements, taillamps need to be on only when headlamps are on. Per state laws this is mostly during the nighttime. Thus, the only time the VIN information would be transmitted through taillamps would be at night. The total percentage of vehicle travel at night is low. As the petitioner stated, there would likely be no visual perception of the data being transmitted, but there is the possibility of slight intensity reduction. To this extent, the taillamp would still be required to comply with the specified intensity requirements for taillamps.

Stop lamps using the Bromer system could transmit only the VIN information when these lamps were actuated during braking, further reducing the total time that any VIN signal would be transmitted. Thus, in order for the system to be effective, the taillamps and/or stop lamps would need to be on all the time. The stop lamps could not be permitted to do this for obvious safety reasons. Additionally, operation of the stop lamps without braking is not permitted by FMVSS No. 108.

There is the possibility of developing a new FMVSS. As it is, the Bromer system could help in recovering a vehicle during the period between when it is reported stolen and logged into the system, and when the system is disabled. Possibly, if the Bromer system is not disabled, it could identify the vehicle as stolen if it were to be resold. The likelihood of vehicle recovery could be very high if the Bromer system were not disabled immediately or shortly after being initially stolen. Conversely, the effectiveness of the Bromer system could be low if a thief immediately disabled the device at the time of theft or within a few minutes of when the vehicle could be stopped. At that point, the vehicle would become like any other vehicle, having no emitted signal and invisible to a police cruiser's receiver.

Relative to the system operating through Federally required signal lighting, the Bromer system would require all motor vehicles to use LED technology for stop and/or taillamps. Most vehicles would have to be equipped with LEDs at some expense ($10 to $30 per vehicle at a minimum). There would also be an additional cost for the installation of the vehicle transmitter circuitry. Because few vehicles use LEDs, mandating their use would certainly increase the cost of most vehicles.

An additional consideration is that such a system, if Federally mandated for installation on motor vehicles, would have to be accompanied by a receiver installed in every police vehicle throughout the United States if the system's goals were to be fully realized. If NHTSA were to mandate this, it would be many years until the entire fleet of citizen vehicles and police vehicles were equipped and compatible. Also, a system for national distribution of computer programs to law enforcement jurisdictions and the national and immediate distribution of stolen vehicle VINs would have to be implemented. This could impose substantial costs to states. In sum, we believe that the cost to manufacturers, vehicle owners and states outweigh any possible benefits that the Bromer system might have in reducing motor vehicle theft and increasing vehicle recovery.

A final concern is that each vehicle transmitting this unique information would instantly provide the police and any other person having access to a system receiver, the whereabouts of the vehicle and its owner or operator. Transmitting this type of information may constitute an unwarranted invasion of personal privacy to the persons who would be identified (5 U.S.C. 552(b)6)).

This completes the agency's technical review, and, on the basis of the foregoing, the agency has decided to deny Mr. Bromer's petition.

Authority: 49 U.S.C. 33102–33104 and 33106; delegation of authority at 49 CFR 1.50.

Issued on: August 1, 2002.

Stephen R. Kratzke,

Associate Administrator for Safety Performance Standards.

[FR Doc. 02–19841 Filed 8–5–02; 8:45 am]

BILLING CODE 4910–59–P

DEPARTMENT OF TRANSPORTATION

Surface Transportation Board

[STB Finance Docket No. 34226]

R.J. Corman Equipment Company, LLC—Acquisition Exemption—Line of CSX Transportation, Inc.

R.J. Corman Equipment Company, LLC (RJCE), a Class III rail carrier, has filed a verified notice of exemption under 49 CFR 1150.41 to acquire approximately 2.16 miles of track in Wayne County, OH, from CSX Transportation, Inc. The line, known as the Wooster Industrial Track, extends between approximately milepost 16.81 and milepost 18.97.

This transaction is related to a simultaneously filed verified notice of exemption in STB Finance Docket No. 34227, *R.J. Corman Railroad Company/Cleveland Line-Lease and Operation Exemption-Line of R.J. Corman Equipment Company, LLC,* wherein R.J. Corman Railroad Company/Cleveland Line will lease and operate the line being acquired by RJCE.

The parties reported that they intended to consummate the transaction on or soon after July 18, 2002, the effective date of the exemption (7 days after the exemption was filed).

If the notice contains false or misleading information, the exemption is void *ab initio.* Petitions to revoke the exemption under 49 U.S.C. 10502(d) may be filed at any time. The filing of a petition to revoke does not automatically stay the transaction.

An original and 10 copies of all pleadings referring to STB Finance Docket No. 34226, must be filed with the Surface Transportation Board, 1925 K Street, NW., Washington, DC 20423–0001. In addition, a copy of each pleading must be served on Kevin M. Sheys, 1800 Massachusetts Avenue, NW., Suite 200, Washington, DC 20036–1221.

Board decisions and notices are available on our Web site at *www.stb.dot.gov.*

Decided: July 25, 2002.

By the Board, David M. Konschnik, Director, Office of Proceedings.

Vernon A. Williams,

Secretary.

[FR Doc. 02–19433 Filed 8–5–02; 8:45 am]

BILLING CODE 4915–00–P

DEPARTMENT OF TRANSPORTATION

Surface Transportation Board

[STB Finance Docket No. 34227]

R.J. Corman Railroad Company/Cleveland Line—Lease and Operation Exemption—Line of R.J. Corman Equipment Company, LLC

R.J. Corman Railroad Company/Cleveland Line (RJCL), a Class III rail carrier, has filed a verified notice of exemption under 49 CFR 1150.41 to lease and operate approximately 2.16 miles of track in Wayne County, OH, known as the Wooster Industrial Track, extending between approximately milepost 16.81 and milepost 18.97. This transaction is related to a simultaneously filed verified notice of exemption in STB Finance Docket No. 34226, *R.J. Corman Equipment Company, LLC—Acquisition Exemption—Line of CSX Transportation, Inc.,* wherein R.J. Corman Equipment Company, LLC will acquire the Wooster Industrial Track from CSX Transportation, Inc. (CSXT).

As part of this transaction, RJCL will acquire by assignment from CSXT incidental overhead trackage rights over rail lines of the Norfolk Southern Railway Company between East Gravel, OH (approximately milepost 1.74), and Massillon, OH (approximately milepost 0.0), and between Massillon (approximately milepost 110.7) and Wooster, OH (approximately milepost 138.0), a distance of approximately 29.04 miles in Wayne and Stark Counties, OH. RJCL states that the trackage rights will enable it to connect with the segment of rail line that it owns between Massillon and Warwick, OH.

RJCL certifies that its projected annual revenues will not exceed those that would qualify it as a Class III rail carrier and that its annual revenues are not projected to exceed $5 million.

The parties reported that they intended to consummate the transaction on or soon after July 18, 2002, the effective date of the exemption (7 days after the exemption was filed).

If the verified notice contains false or misleading information, the exemption is void *ab initio.* Petitions to revoke the exemption under 49 U.S.C. 10502(d) may be filed at any time. The filing of a petition to revoke will not automatically stay the transaction.

An original and 10 copies of all pleadings referring to STB Finance Docket No. 34227, must be filed with the Surface Transportation Board, 1925 K Street, NW., Washington, DC 20423–0001. In addition, a copy of each pleading must be served on Kevin M. Sheys, 1800 Massachusetts Avenue, NW., Suite 200, Washington, DC 20036–1221.

Board decisions and notices are available on our Web site at *www.stb.dot.gov.*

Decided: July 25, 2002.

By the Board, David M. Konschnik, Director, Office of Proceedings.

Vernon A. Williams,

Secretary.

[FR Doc. 02–19434 Filed 8–5–02; 8:45 am]

BILLING CODE 4915–00–P

Federal Register

Tuesday,
August 6, 2002

Part II

Department of Education

34 CFR Part 200

Title I—Improving the Academic Achievement of the Disadvantaged; Proposed Rule

DEPARTMENT OF EDUCATION

34 CFR Part 200

RIN 1810–AA91

Title I—Improving the Academic Achievement of the Disadvantaged

AGENCY: Office of Elementary and Secondary Education, Department of Education.

ACTION: Notice of proposed rulemaking.

SUMMARY: The Secretary proposes to amend the regulations governing the programs administered under Title I of the Elementary and Secondary Education Act of 1965, as amended (ESEA)—referred to in these proposed regulations as the Title I programs. These proposed regulations are needed to implement recent changes to Title I of the ESEA made by the No Child Left Behind Act of 2001 (NCLB Act).

DATES: We must receive your comments on or before September 5, 2002.

ADDRESSES: Address all comments for subparts A, B, and D of part 200 in these proposed regulations and all comments on information collection requirements to Jacquelyn C. Jackson, Ed.D., Acting Director, Student Achievement and School Accountability Programs, Office of Elementary and Secondary Education, U.S. Department of Education, 400 Maryland Avenue, SW., room 3W230, FB–6, Washington, DC 20202–6132. The Fax number for submitting comments on subparts A, B, and D is (202) 260–7764.

Address all comments for subpart C of part 200 in these proposed regulations to Francisco Garcia, Director, Migrant Education Program, Office of Elementary and Secondary Education, U.S. Department of Education, 400 Maryland Avenue, SW., room 3E317, FB–6, Washington, DC 20202–6135. The Fax number for submitting comments on subpart C is (202) 205–0089.

If you prefer to send your comments through the Internet, use the following address: *TitleIRulemaking@ed.gov.*

FOR FURTHER INFORMATION CONTACT: For subparts A, B, D, and E, of part 200, Jackie Jackson, Student Achievement and School Accountability Programs, Office of Elementary and Secondary Education, U.S. Department of Education, 400 Maryland Avenue, SW., room 3W202, FB–6, Washington, DC 20202–6132. Telephone: (202) 260–0826.

For subparts C and E of part 200, James English, Migrant Education Program, Office of Elementary and Secondary Education, U.S. Department of Education, 400 Maryland Avenue, SW., room 3E315, FB–6, Washington, DC 20202–6135. Telephone (202) 260–1394.

If you use a telecommunications device for the deaf (TDD), you may call the Federal Information Relay Service (FIRS) at 1–800–877–8339.

Individuals with disabilities may obtain this document in an alternative format (e.g., Braille, large print, audiotape, or computer diskette) on request to the contact person listed under **FOR FURTHER INFORMATION CONTACT.**

SUPPLEMENTARY INFORMATION:

Invitation to Comment

We invite you to submit comments regarding these proposed regulations. To ensure that your comments have maximum value in helping us develop the final regulations, we urge you to identify clearly the specific section or sections of the proposed regulations that each comment addresses and to arrange your comments in the same order as the proposed regulations.

During and after the comment period, you may inspect all public comments about subparts A, B, D, and E of part 200, as appropriate, of these proposed regulations in room 3C147, FB–6, 400 Maryland Avenue, SW., Washington, DC, between the hours of 8:30 a.m. and 4 p.m., Eastern time, Monday through Friday of each week except Federal holidays. You may inspect all public comments about subparts C and E of part 200, as appropriate, of these proposed regulations in room 3E315, FB–6, 400 Maryland Avenue, SW., Washington, DC, between the hours of 8:30 a.m. and 4 p.m., Eastern time, Monday through Friday of each week except Federal holidays.

Assistance to Individuals With Disabilities in Reviewing the Rulemaking Record

On request, we will supply an appropriate aid, such as a reader or print magnifier, to an individual with a disability who needs assistance to review the comments or other documents in the public rulemaking record for these proposed regulations. If you want to schedule an appointment for this type of aid, please contact the person listed under **FOR FURTHER INFORMATION CONTACT.**

Background

The NCLB Act reauthorized the ESEA and incorporated the major educational reforms proposed by President George W. Bush in his No Child Left Behind initiative. These reforms included important changes to Title I of the ESEA, which is designed to help disadvantaged children meet high academic standards.

These proposed regulations would implement those changes in a manner that respects State and local control over education while ensuring strong accountability for results. On July 5, 2002, the Secretary separately published in the **Federal Register** final regulations for the standards and assessment provisions of Title I, part A of the ESEA.

The Secretary intends to regulate only if absolutely necessary: for example, if the statute requires regulations or if regulations are necessary to provide flexibility or clarification for State educational agencies (SEAs) and local educational agencies (LEAs). Rather than regulating extensively, the Secretary intends to issue nonregulatory guidance addressing particular legal and policy issues under the Title I programs. This guidance will inform schools, parents, school districts, States, and other affected parties about the flexibility that exists under the statute, including different approaches they may take to carry out the statute's requirements.

Significant Proposed Regulations

We group major issues according to subject. We discuss other substantive issues under the sections of the proposed regulations to which they pertain. Generally, we do not address proposed regulatory provisions that are technical or otherwise minor in effect.

Subpart A—Improving Basic Programs Operated by Local Educational Agencies

Section 200.11 Participation in NAEP

Statute: Section 1111(c)(2) of the NCLB Act requires each State to participate in biennial State assessments of 4th and 8th grade reading and mathematics under the National Assessment of Educational Progress (NAEP). Similarly, section 1112(b)(1)(F) of the NCLB Act requires each LEA participating under subpart A of this part to participate, if selected, in the State NAEP.

Proposed Regulations: The proposed regulation would clarify that LEAs receiving Title I funds must participate in NAEP if they are selected.

Reasons: The proposed regulations make clear that a condition of receiving Title I funds is that, if selected, the LEA must participate in NAEP despite section 411(d)(1) of the National Education Statistics Act of 1994, which provides for voluntary participation of LEAs.

State Accountability System

Section 200.12 Single State Accountability System

Statute: Under section 1111(b)(2)(A) of the ESEA, each State must develop and implement a single, statewide accountability system to ensure that all LEAs and public schools in the State make adequate yearly progress. The State's accountability system must be based on the State's academic standards and assessment system and take into account all public elementary and secondary school students; be the same accountability system the State uses for all public schools and LEAs in the State; and include rewards and sanctions the State will use to hold LEAs and public schools accountable for student achievement. The State's accountability system may, but is not required to, apply the requirements in section 1116 of Title I relating to identifying schools for improvement, corrective action, and restructuring to non-Title I schools and non-Title I LEAs.

Proposed Regulations: Proposed § 200.12 would implement the statutory provisions requiring a single, statewide accountability system. It would make clear that these provisions take effect beginning with the 2002–2003 school year. Proposed § 200.12 also would require States to include, in their accountability system, guidelines for identifying the students with disabilities who should take alternate assessments and would require reporting on the number of students with disabilities who take an alternate assessment.

Reasons: Proposed § 200.12 reflects the Secretary's goal of regulating only where necessary to provide clarity or flexibility. It emphasizes the importance of a single, statewide accountability system and sets the context for the subsequent regulations on adequate yearly progress. By requiring States to establish guidelines governing alternate assessments, it also ensures that only students with the most significant disabilities take those assessments.

Adequate Yearly Progress

Sections 200.13 Through 200.20 Adequate Yearly Progress

Statute: Under section 1111(b)(2)(B), each State must demonstrate what constitutes adequate yearly progress of the State, and of all public elementary and secondary schools and LEAs in the State, toward enabling all students to meet the State's student achievement standards. ''Adequate yearly progress'' definitions must apply the same high standards of academic achievement to all public elementary and secondary school students in the State, be statistically valid and reliable, and measure progress based primarily on the State's academic assessments. The definition must include separate annual measurable objectives for continuous and substantial improvement in both mathematics and reading/language arts for all students and for each of the following specific groups of students: students who are economically disadvantaged, students from major racial and ethnic groups, students with disabilities, and students with limited English proficiency.

Adequate yearly progress must include a timeline that ensures that all students in each subgroup meet or exceed the State's proficient level of academic achievement no later than the 2013–2014 school year. Using data from the 2001–2002 school year, each State must determine a starting point for reading/language arts and mathematics for measuring the percentage of students meeting or exceeding the State's proficient level of academic achievement. The starting point must, at a minimum, be based on the higher of two proficiency levels specified in the statute. Adequate yearly progress must include intermediate goals that increase in equal increments over the timeline; the first increment must occur in not more than two years from the baseline year (2001–2002) and the following increases must occur in not more than three years. Adequate yearly progress must also include the graduation rate for high schools and a similar academic indicator for elementary and middle schools.

To make adequate yearly progress, a school must meet two criteria. First, the school must meet or exceed the State's annual measurable objectives with respect to all students and students in each subgroup. If students in any subgroup fail to make the requisite progress, however, the school can still make adequate yearly progress if the percentage of students below proficient in that subgroup decreased by at least 10 percent compared to the preceding year and that subgroup made progress on one or more of the additional academic indicators. Second, at least 95 percent of the students in each subgroup enrolled in the school must take the assessment.

Current Regulations: The current regulations governing adequate yearly progress (34 CFR 200.3) reflect provisions of section 1111 of the ESEA that were superseded by the NCLB Act.

Proposed Regulations: The proposed regulations in §§ 200.13 through 200.20 would implement the statutory provisions in section 1111(b)(2) that require each State to demonstrate what constitutes adequate yearly progress. For the most part, the proposed regulations would merely reorganize the statutory provisions to make them more understandable, particularly the interrelationship among the timeline, starting points, intermediate goals, and annual measurable objectives.

In several instances, the proposed regulations would clarify the statutory provisions or provide flexibility. For example, proposed § 200.13(c)(1) permits a State to define achievement standards for students with the most significant cognitive disabilities who take an alternate assessment. Section 1111(b)(2)(I)(ii) of the ESEA provides that children with disabilities who take an alternate assessment must be included in the 95 percent of students who must participate in the assessments in order for a school to make adequate yearly progress. Under the Title 1 accountability system, alternate assessments are an appropriate way to measure the progress of only that very limited portion of students with the most significant cognitive disabilities who will never be able to demonstrate progress on grade level academic achievement standards even if provided the very best possible education. Based on current prevalence rates of students with the most significant cognitive disabilities, proposed § 200.13(c)(2), would set the number of students with disabilities who should be included in accountability measures using alternate standards at not more than 0.5 percent of all students assessed in a State or LEA. For accountability purposes, the performance of all other students with disabilities (including any other students with disabilities who take an alternate assessment) must be assessed against the academic content and achievement standards established under § 200.1.

Proposed § 200.13(d) would make clear that a State must have a way to hold accountable schools in which no grade level is assessed under the State's academic assessment system or whose purpose is to serve students for less than a full academic year. The proposed regulations emphasize, however, that the State does not need to administer a formal assessment to students in these schools. Similarly, proposed § 200.15(b) would clarify that, if a State changes its academic assessment system or its definition of adequate yearly progress, the State may not extend, beyond the 2013–2014 school year, its timeline for enabling all students to reach proficiency. Proposed § 200.16 would make clear that a State must set separate starting points for reading/language arts and mathematics, because the State

must hold schools accountable for student achievement in each subject. That section would permit a State to establish separate starting points by grade span. Proposed § 200.16(b)(2) also would clarify how a State determines a starting point based on the percentage of students at the proficient level in the ''school at the 20th percentile in the State, based on enrollment.''

Section 1111(b)(2)(C)(vi) of the ESEA requires a State to include the graduation rate in its determination of adequate yearly progress for public secondary schools and defines graduation rate as ''the percentage of students who graduate from secondary school with a regular diploma in the standard number of years.'' Proposed § 200.19, which deals with other academic indicators, would rely on language in the conference report to the NCLB Act to permit a State to submit for the Secretary's approval another definition that accurately measures the high school graduation rate. Proposed § 200.19(c) would make clear that a State may, but is not required to, increase the goals of its other academic indicators over the course of its timeline.

Proposed § 200.20, which would implement the statutory provisions for how a school or LEA makes adequate yearly progress, would clarify the statutory requirement that 95 percent of the students enrolled in each subgroup in a school must take the State's academic assessment in order for the school to make adequate yearly progress. Proposed § 200.20(c)(1)(ii) would make clear that the number of students in a subgroup must be of sufficient size to produce statistically reliable results for the 95 percent requirement to affect adequate yearly progress. In other words, if the number of students in a subgroup is too small to produce statistically reliable results, the State need not, on the basis of the 95 percent requirement, identify the school as failing to make adequate yearly progress if less than 95 percent of the students in that subgroup take the State's assessment. This proposed provision would not, however, authorize a State to exclude students in small subgroups from taking the assessment. Finally, proposed § 200.20(e) would permit a State to define ''full academic year'' for the purpose of determining adequate yearly progress.

Reasons: Proposed §§ 200.13 through 200.20 reflect the Secretary's goal of providing clarity where the statute is ambiguous and reorganizing the statutory requirements to facilitate a better understanding of and compliance with those requirements. These sections also reflect the Secretary's goal to provide added flexibility wherever possible.

In developing these proposed regulations, the Department has carefully based them on the statutory provisions governing adequate yearly progress. These requirements are designed to enhance the quality systems of accountability that many States have already developed. At the core of the NCLB Act's accountability pillar, the statutory provisions require each State to implement a single statewide system for annually holding all public schools and LEAs accountable. This single system will ensure that all students, including students with disabilities, limited English proficient students, economically disadvantaged students, and students from major racial and ethnic groups, will be proficient in reading/language arts and mathematics by the 2013–2014 school year. We are aware that there are rigorous models that States have already developed that may achieve the same fundamental principles of the statute, although through different approaches. For example, some models establish a growth trajectory for each school based on the school's baseline performance. Other models, in determining a school's performance, take into consideration the school's progress in moving students from ''below basic'' to ''basic'' as well as from ''basic'' to ''proficient'' and from ''proficient'' to ''advanced.'' We specifically invite States that have been using different models to comment on the statutory provisions that might affect their use, and how these requirements could be incorporated into their current systems.

Section 200.21 Adequate Yearly Progress of a State

Statute: Section 6161 of the ESEA requires the Secretary, beginning with the 2004–2005 school year, to review whether each State that receives funds under Title I, part A has made adequate yearly progress with respect to each subgroup of students under section 1111(b)(2)(C)(v) of the ESEA. If a State also receives funds under Title III, part A, subpart 1 of the ESEA, the Secretary must also review whether the State has met its annual measurable achievement objectives relating to the development and attainment of English proficiency by limited English proficient students.

Proposed Regulations: Proposed § 200.21 would implement this new requirement. This section would emphasize that the Secretary will review whether a State has made adequate yearly progress as defined in proposed §§ 200.13 through 200.20 for each subgroup of students as well as has met its annual measurable achievement objectives relating to the development and attainment of English proficiency by limited English proficient students.

Reasons: Proposed § 200.21 reflects the Secretary's goal of regulating only where necessary to provide clarity or flexibility. It is included to emphasize, for the first time, a State's responsibility to make adequate yearly progress for each subgroup of students and meet its goals for improving the English proficiency of its limited English proficient students.

Schoolwide Programs

Statute: Section 1114 of the ESEA made three substantive changes to the existing requirements governing schoolwide programs. Section 1114(a)(1) allows a school to operate a schoolwide program if the school serves an eligible school attendance area in which at least 40 percent of the children are from low-income families, or if at least 40 percent of the children enrolled in the school are from such families. Under the previous statute, the eligibility threshold was 50 percent.

Section 1114(b)(1)(A) requires the comprehensive needs assessment for a schoolwide program to take into account the needs of migratory children.

Section 1306(b)(4) of the ESEA made one additional substantive change in the schoolwide program requirements. Under that provision, a school must document that the special educational needs of migrant students have been met before Title I, part C funds may be included in a schoolwide program. Previously, a school was required only to address those needs, not document that they had been met, before including Title I, part C funds.

Current Regulations: Current § 200.8 reflects the basic statutory requirements for schoolwide programs. The regulations specify (1) the eligibility requirements for a schoolwide program—including a provision that permits an LEA to determine schoolwide eligibility using a poverty measure that is different from the poverty measure used to identify and rank school attendance areas; (2) requirements for and restrictions on combining funds in a schoolwide program; (3) components of a schoolwide program; (4) schoolwide program planning and needs assessment; and (5) the effects of operating a schoolwide program in relation to other Federal program requirements.

Proposed Regulations: The proposed regulations would not substantively

change the current regulations beyond conforming them to the new statutory requirements. However, the proposed regulations would reorganize the current regulations in a way that emphasizes the fundamental purpose of a schoolwide program. The provisions of current § 200.8 would be divided into four new, smaller and simpler sections—proposed §§ 200.25 through 200.28.

Proposed § 200.25 would clarify that the purpose of a schoolwide program is to improve the academic achievement of all students, especially those furthest from meeting the State's proficient academic achievement standard. Proposed § 200.25 would also contain the eligibility requirements.

Proposed § 200.26 would clarify that a schoolwide plan must describe how the school will improve academic achievement so that all students will meet the State's proficient academic achievement standard, especially those furthest from meeting proficiency. The proposed section would also clarify that the plan must be reviewed and revised as necessary to reflect changes in the schoolwide program or in the State's academic content standards and academic achievement standards. The proposed section would also include the provisions requiring the comprehensive needs assessment to take into account the needs of migratory children.

Proposed § 200.27 would reorganize the schoolwide components into four primary categories: (1) Schoolwide reform strategies, (2) instruction by highly qualified teachers, (3) parent involvement, and (4) additional support. The proposed section also would emphasize that reform strategies must address the needs of students in the school, but particularly those furthest from meeting the State's proficient academic achievement standard.

Proposed § 200.28 would group together all the statutory provisions addressing the uses of funds in a schoolwide program. These provisions include the new provisions governing meeting the needs of migrant students.

Reasons: The Department has found that school-level officials are sometimes confused about the purpose of the schoolwide approach. Often, schools do not use the flexibility offered by the schoolwide approach as a means to improve achievement, particularly for those students furthest from meeting the proficient standard. These regulations are intended to help schools better understand that schoolwide flexibility is a strategic approach, using scientifically based strategies, for improving student achievement to ensure that no child is left behind.

LEA and School Improvement

Section 200.30 Local Review; and § 200.31 Opportunity To Review School Level Data

Statute: Under section 1116(a) and (b) of Title I, each participating LEA must use the State academic assessments and other indicators in the State plan, and, at the LEA's discretion, other academic indicators described in the LEA's plan, to review the progress of each school served under subpart A of this part to determine whether the school is making adequate yearly progress. The LEA must publicize the results of its review to parents, teachers, principals, schools, and the community.

In general, the LEA's use of other academic indicators may not reduce the number or change the identity of schools that would otherwise be identified for improvement, corrective action, or restructuring, but may result in the identification of additional schools for improvement, corrective action, or restructuring. However, the use of these indicators may permit a school to make adequate yearly progress if the school reduces by at least 10 percent the percentage of a student subgroup failing to meet the proficient level of academic achievement.

Before identifying a school for improvement, corrective action, or restructuring, an LEA must provide the school an opportunity to review the school-level data, including academic assessment data, on which the LEA has based the proposed identification.

Current Regulations: The current regulations governing LEA review of school performance reflect provisions of section 1116 of the ESEA that were superseded by the NCLB Act.

Proposed Regulations: Proposed § 200.30 would repeat the statutory requirement for LEAs to conduct an annual review of the performance of all schools receiving funds under subpart A of this part. The review would determine whether the schools are making adequate yearly progress toward the goal of helping all students reach proficiency in reading and mathematics within 12 years of enactment of the NCLB Act.

Proposed § 200.30 would further clarify the circumstances under which an LEA could limit its review to the progress of only those students served, or eligible for services, in a school operating a targeted assistance program. The LEA could limit its review only if the students selected for services under the targeted assistance program are those with the greatest need for academic assistance.

Proposed § 200.31 would repeat and reorganize the statutory requirement that an LEA provide a school with the opportunity to review the data on which an LEA has based a proposed identification of the school for improvement, corrective action, or restructuring. The proposed provision would make clear that this review must occur before the LEA's final decision on identification.

Reasons: Proposed §§ 200.30 and 200.31 would reflect the Secretary's goal of clarifying and reorganizing the statutory requirements to facilitate a better understanding of and compliance with those requirements.

Section 200.32 Identification for School Improvement; § 200.33 Identification for Corrective Action; § 200.34 Identification for Restructuring; and § 200.35 Delay and Removal

Statute: Under section 1116(b) of Title I, an LEA must (1) identify for school improvement any school that fails to make adequate yearly progress for two consecutive years and (2) must make available public school choice to all students enrolled in the school. If the school fails to make adequate yearly progress for a third consecutive year, the LEA must continue to offer public school choice and must also make available supplemental educational services to students who remain in the school.

In the case of a school that fails to make adequate yearly progress after two years of improvement, the LEA must identify the school for corrective action and continue to offer public school choice and supplemental educational services to students enrolled in the school. If a school fails to make adequate yearly progress after one year of corrective action, the LEA must identify the school for restructuring and must continue to offer public school choice and supplemental educational services while it prepares a restructuring plan for the school.

The statute also includes transition provisions governing schools identified for improvement or corrective action before the enactment of the NCLB Act:

- An LEA must treat any school that was in improvement on January 7, 2002 as a school that is in the first year of improvement for the 2002–2003 school year.
- An LEA must treat any school that was in improvement for two or more consecutive years on January 7, 2002 as a school in its second year of school improvement for the 2002–2003 school year.
- An LEA must treat any school that was in corrective action on January 7,

2002 as a school that is in corrective action for the 2002–2003 school year.

An LEA may delay for one year the requirements for any school under the second year of improvement, under corrective action, or under restructuring, if (1) the school makes adequate yearly progress for one year or (2) if the school's failure to make adequate yearly progress is due to exceptional or uncontrollable circumstances, such as a natural disaster or a precipitous and unforeseen decline in the financial resources of the LEA or school. However, the LEA may not take into account this period of delay in determining the number of consecutive years of failure to make adequate yearly progress for the purpose of subjecting the school to further improvement actions.

If a school identified for improvement, corrective action, or restructuring makes adequate yearly progress for two consecutive years, the LEA may no longer subject the school to the requirements of improvement, corrective action, or restructuring or identify the school for improvement for the next school year.

Current Regulations: The current regulations governing LEA identification of schools for improvement and corrective action reflect provisions of section 1116 of the ESEA that were superseded by the NCLB Act.

Proposed Regulations: In general, proposed §§ 200.32, 200.33, 200.34, and 200.35 would restate and reorganize the statutory provisions related to the LEA's identification of schools for improvement, corrective action, and restructuring, as well as provisions governing the delay or termination of requirements related to identification.

Proposed § 200.32 clarifies the statutory timeline for identifying schools for improvement. The statute requires the identification to take place ''before the beginning of the school year following such failure to make adequate yearly progress.'' To clarify the meaning of this deadline, proposed § 200.32(a)(2) restates the deadline so that it is clear that the identification must take place ''before the beginning of the school year following the year in which the LEA administered the assessments that resulted in the school's failure to make adequate yearly progress for a second consecutive year.''

In addition, proposed § 200.32(f) states that if the LEA misses this deadline, the school is nevertheless subject to the requirements of school improvement—including the provision of public school choice options to all students enrolled in the school—upon identification and that the LEA must count that school year as a full year of school improvement for the purpose of subjecting the school to additional improvement measures if it continues to fail to make adequate yearly progress. This proposed regulation is intended to prevent the potential delay of needed improvement measures for an additional year if States and LEAs fail to make identification in accordance with the statutory deadline.

Proposed §§ 200.32 and 200.33 also address identification issues related to schools that are not covered under the statutory transition provisions. More specifically, the statute does not account for the potential impact of the results of assessments administered during the 2001–2002 school year. Proposed § 200.32(d) gives an LEA discretion to remove from improvement status a school that, on the basis of the 2001–2002 assessments, makes adequate yearly progress for a second consecutive year. Similarly, proposed § 200.33(c) permits an LEA to remove from corrective action a school that, on the basis of the 2001–2002 assessments, makes adequate yearly progress for a second consecutive year. Proposed § 200.32(e) permits, but does not require, an LEA to identify for improvement a school that, on the basis of the 2001–2002 assessments, fails to make adequate yearly progress for a second consecutive year.

Reasons: Proposed §§ 200.32, 200.33, 200.34, and 200.35 reflect the Secretary's goal of providing clarity where the statute is ambiguous and reorganizing the statutory requirements to facilitate a better understanding of and compliance with those requirements. In particular, proposed § 200.32(a)(2) clarifies the statutorily ambiguous deadline for identifying schools for improvement and proposed § 200.32(f) ensures that the school improvement timeline is not thwarted by the failure to meet this deadline.

In addition, proposed § 200.32(d) and (e) and § 200.33(c) apply the statutory provisions for entering and exiting improvement status—two consecutive years of failure to make adequate yearly progress and two consecutive years of making adequate yearly progress, respectively—to schools not covered under the transition provisions in section 1116(f) of the NCLB Act.

Section 200.36 Communication With Parents; § 200.37 Notice of Identification for Improvement, Corrective Action, or Restructuring; and § 200.38 Information About Action Taken

Statute: Under section 1116 of Title I, SEAs and LEAs must keep parents informed throughout the improvement process. In particular, section 1116(b)(6) requires LEAs to provide the parents of each student enrolled in a school identified for improvement, corrective action, or restructuring an explanation of what the identification means, the reasons for the identification, what the school, LEA, and SEA are doing to address the achievement problems that led to the identification, how parents can help the school improve, and the parents' option to transfer their child to another public school or to obtain supplemental educational services for their child.

Current Regulations: The current regulations governing LEA notification of parents during the school improvement process reflect provisions of section 1116 of the ESEA that were superseded by the NCLB Act.

Proposed Regulations: Proposed § 200.36 clarifies the manner in which SEAs, LEAs, and schools must meet notification requirements under section 1116 by providing guidelines for all communications with parents. These guidelines include the use of an understandable and uniform format for all required notices; the provision, to the extent practicable, of all notices in a language that parents can understand; the use of direct means of communication, such as mailing materials home, as well as broader electronic means such as the Internet; and assurances that all notices respect the privacy of students and their families.

Proposed § 200.37 repeats the statutory requirement to notify parents when the school their child attends is identified for improvement, corrective action, or restructuring. Proposed § 200.37(b)(4) would add to the statutory requirement for an explanation of the public school choice option the inclusion of information on the performance of the schools to which a student may transfer. Proposed § 200.37 also would require LEAs to include in their annual notice of the availability of supplemental educational services the identification of any providers of technology-based or distance-learning services.

Proposed § 200.38 restates the statutory requirement for LEA notification to parents of action taken to

address the problems that led the LEA to identify the school for improvement, corrective action, or restructuring.

Reasons: Proposed §§ 200.36, 200.37, and 200.38 reflect the Secretary's goal of providing clarity where the statute is ambiguous and reorganizing the statutory requirements to facilitate a better understanding of and compliance with those requirements. The proposed regulations would help ensure that SEAs, LEAs, and schools develop a uniform approach for communicating with parents throughout the school improvement process.

Section 200.39 Responsibilities Resulting From Identification for School Improvement; § 200.40 Technical Assistance; and § 200.41 School Improvement Plan

Statute: Under section 1116(b) of Title I, if an LEA identifies a school for improvement, the LEA must provide all students enrolled in the school with the option to transfer to schools served by the LEA that have not been identified for improvement. The LEA also must ensure that the school receives technical assistance in identifying and addressing the problems that led to the identification for improvement. The school must develop and implement a school improvement plan covering a two-year period that specifies the responsibilities of the school, the LEA, and the SEA under the plan; incorporates scientifically based strategies for strengthening instruction in the core academic subjects; includes annual measurable objectives for helping all student groups make adequate yearly progress; and sets aside 10 percent of the school's Title I allocation for professional development that directly addresses the achievement problems that led the LEA to identify the school for improvement.

The LEA must promptly review the school improvement plan, work with the school to make any necessary revisions, and approve the plan within 45 days of receiving it from the school. The LEA may condition approval of the plan on the inclusion of one of the corrective actions specified in section 1116(b)(7)(C)(iv) of Title I or on feedback from parents and community leaders.

If a school continues to fail to make adequate yearly progress after one year of school improvement, the LEA must continue to offer a public school choice option to students enrolled in the school, continue to provide technical assistance, and make available supplemental educational services to eligible students who remain in the school.

Current Regulations: The current regulations governing LEA and school-level responsibilities when the LEA identifies a school for improvement reflect provisions of section 1116 of the ESEA that were superseded by the NCLB Act.

Proposed Regulations: In general, proposed §§ 200.39, 200.40, and 200.41 restate the statutory requirements related to LEA and school-level responsibilities under the school improvement process, including the LEA's obligation to offer public school choice options and to provide technical assistance and the school's responsibility to develop and implement a comprehensive school improvement plan. Proposed § 200.41(c)(4) also clarifies that school improvement plans must include measurable goals that address the specific reasons for the school's failure to make adequate yearly progress. This proposal is intended to eliminate possible confusion between the goals in the improvement plan and the State-level annual measurable objectives established under section 1111 for the purpose of determining adequate yearly progress.

Proposed § 200.41(c)(5) would increase flexibility in the use of the 10 percent set-aside for professional development under the school improvement plan by making instructional staff other than teachers and principals eligible for these professional development activities.

Reasons: Proposed §§ 200.39, 200.40, and 200.41 reflect the Secretary's goal of providing clarity where the statute is ambiguous and reorganizing the statutory requirements to facilitate a better understanding of and compliance with those requirements.

Section 200.42 Corrective Action; and § 200.43 Restructuring

Statute: Under section 1116(b)(7) of Title I, if an LEA identifies a school for corrective action, it must continue to provide all students enrolled in the school with the option to transfer to another public school, continue to ensure that the school receives technical assistance, continue to make available supplemental educational services to students who remain in the school, and take at least one of the corrective actions specified in the statute. These corrective actions include replacing the school staff, implementing a new curriculum, decreasing management authority at the school, appointing an outside expert to advise the school, extending the school day or year, and reorganizing the school internally.

If an LEA identifies a school for restructuring, it must continue to provide a public school choice option and make available supplemental educational services while preparing a plan to carry out an alternative governance arrangement specified in the statute. These alternative governance arrangements include reopening the school as a public charter school, replacing all or most of the school staff, entering into a contract with a private management company to operate the school as a public school, turning over operation of the school to the SEA, or any other major restructuring of a school's governance arrangements.

If the school continues to fail to make adequate yearly progress, the LEA must implement its restructuring plan no later than the beginning of the school year following the year in which it identified the school for restructuring.

Current Regulations: The current regulations governing corrective action reflect provisions of section 1116 of the ESEA that were superseded by the NCLB Act, and restructuring is a new requirement under the NCLB Act.

Proposed Regulations: In general, §§ 200.42 and 200.43 restate the statutory requirements related to corrective action and restructuring. Proposed § 200.42(b)(4)(iv)(A) and (B) clarify that the purpose of appointing an outside expert as a corrective action is to help revise the school improvement plan developed under § 200.41 and implement the revised plan.

Reasons: Proposed §§ 200.42 and 200.43 reflect the Secretary's goal of providing clarity where the statute is ambiguous and reorganizing the statutory requirements to facilitate a better understanding of and compliance with those requirements.

Section 200.44 Public School Choice

Statute: Under section 1116(b) of Title I, if an LEA identifies a school for improvement, corrective action, or restructuring it must provide each student enrolled in the school with the option to transfer to another public school served by the LEA that is not identified for improvement, corrective action, or restructuring, unless such an option is prohibited by State law. The LEA must provide the option to transfer no later than the first day of the school year following the identification for improvement, corrective action, or restructuring, and must provide or pay for the transportation of the student to the school the student chooses to attend.

In providing students the option to transfer, the LEA must give priority to the lowest-achieving students from low-income families. If a student exercises

the option to transfer to another public school, the LEA must permit the student to remain in that school until the student has completed the highest grade in the school. However, the LEA's obligation to provide transportation ends at the end of a school year if the school from which the student transferred is no longer identified for improvement, corrective action, or restructuring.

Current Regulations: The public school choice requirement is new under the NCLB Act and not covered under current regulations.

Proposed Regulations: Proposed § 200.44 restates and reorganizes the statutory provisions in section 1116(b) related to public school choice. The proposed regulations also clarify the statutory deadline by requiring LEAs to provide a choice option not later than the first day of the school year following the year in which the LEA administered the assessments that resulted in the identification of the school for improvement, corrective action, or restructuring.

In addition, proposed § 200.44(a)(4) would require LEAs to offer the parents of each eligible student a choice of more than one school, if there is more than one school within the LEA that has not been identified for improvement, corrective action, or restructuring, and to take into account the parents' preferences in assigning students to a new school.

Proposed § 200.44(b) would clarify that the statutory exception from the public school choice requirements where choice is prohibited by State law applies only if the State law prohibits choice through restrictions on public school assignments or the transfer of students from one public school to another public school. Proposed § 200.44(c) clarifies that LEA implementation of a desegregation plan does not exempt the LEA from the public school choice requirement in section 1116(b) of Title I.

Proposed § 200.44(f) and (h) would limit an LEA's obligation to provide or pay for choice-related transportation due to insufficient funding resulting from the application of § 200.48.

Reasons: Proposed § 200.44 reflects the Secretary's goal of providing clarity where the statute is ambiguous and reorganizing the statutory requirements to facilitate a better understanding of and compliance with those requirements. Proposed § 200.44(a)(2) clarifies the deadline for providing choice to be consistent with the statutory requirement that identification for improvement, corrective action, or restructuring occur prior to the beginning of the school year.

Proposed § 200.44(a)(4) would empower parents by ensuring, wherever possible, that they have the option of choosing, from among several options, the school that best meets the educational needs of their child.

Proposed § 200.44(b) and (c) are intended to prevent LEAs from arbitrarily invoking either State law or desegregation plans in seeking an exemption from the public school choice requirement. Proposed § 200.44(f) and (h) reflect the interpretation under § 200.48 that the statute caps the set-aside for choice-related transportation and supplemental educational services at an amount equal to 20 percent of an LEA's allocation under subpart A of this part, thereby limiting the LEA's obligation to satisfy all requests for choice-related transportation.

Proposed §200.44(i) clarifies that for children with disabilities, the public school choice option must provide a free and appropriate public education.

Section 200.45 Supplemental Educational Services; § 200.46 LEA Responsibilities for Supplemental Educational Services; and § 200.47 SEA Responsibilities for Supplemental Educational Services

Statute: Section 1116(e) of Title I defines supplemental educational services as tutoring and other academic enrichment services designed to increase the academic achievement of eligible students and help them attain proficiency in meeting State academic achievement standards. If an LEA has identified a school for a second year of school improvement, for corrective action, or for restructuring, it must arrange for supplemental educational services for each eligible student from a State-approved provider selected by the student's parents. Eligible students are defined in the statute as students from low-income families, and if funding is insufficient to provide services to all such students, LEAs must give priority to the lowest-achieving eligible students.

SEAs must promote participation by as many providers as possible, develop criteria for approval as a provider that are based on a demonstrated record of effectiveness in increasing student achievement in subjects relevant to meeting State academic content and achievement standards, maintain an updated list of providers from which parents may select, and monitor the quality and effectiveness of approved providers.

An LEA making available supplemental educational services must, funding permitting, continue to make available such services until the end of the school year. An SEA may waive the requirement for an LEA to provide supplemental educational services if none of the providers on the State's list make services available within a reasonable distance of the LEA and if the LEA itself is not able to provide the services.

Current Regulations: The requirement to provide supplemental educational services is new under the NCLB Act and not covered under current regulations.

Proposed Regulations: In general, proposed §§ 200.45, 200.46, and 200.47 repeat the statutory requirements for the provision of supplemental educational services. Proposed § 200.47 would modify the standards for SEA approval of providers to clarify that supplemental service providers may include a non-profit entity, a for-profit entity, a public school, including a public charter school, a private school, or an LEA. The proposed § 200.47 also would prohibit schools that are identified for improvement, corrective action, or restructuring from being a provider.

Reasons: Proposed §§ 200.45, 200.46, and 200.47 reflect the Secretary's goal of providing clarity where the statute is ambiguous and reorganizing the statutory requirements to facilitate a better understanding of and compliance with those requirements.

Examples of evidence from a provider that may demonstrate effectiveness include the following:

- Significant improvement in student academic achievement as measured by statewide assessments;
- Successful use of instructional practices based on research;
- Successful and sustained remediation of reading/language arts or math difficulties, such as bringing students up to grade-level standards.

Section 200.48 Funding for Choice-Related Transportation and Supplemental Educational Services

Statute: Section 1116(b)(10) of Title I requires LEAs to make available funding to pay for transportation costs related to the provision of public school choice options and for supplemental educational services. In general, affected LEAs must spend an amount equal to 20 percent of their allocation under subpart A of this part to pay for choice-related transportation, supplemental educational services, or a combination of the two. In reserving such funds, an LEA may not reduce by more than 15 percent the allocation it provides to a

school identified for corrective action or restructuring.

LEAs must use, at a minimum, an amount equal to five percent of their allocations under subpart A of this part to pay for supplemental educational services, if parents request such services. SEAs may use funds reserved for State-level activities under subpart A of this part and under part A of Title V to assist LEAs that do not have sufficient funds to satisfy all requests for supplemental educational services. For each student receiving such services, the LEA must make available the lesser of the LEA's per-child allocation under subpart A of this part or the actual cost of services.

Current Regulations: The requirement to reserve funding for choice-related transportation and supplemental educational services is new under the NCLB Act and not covered under current regulations.

Proposed Regulations: Proposed § 200.48 would clarify statutory ambiguity regarding the reservation of funding to pay for choice-related transportation and supplemental educational services. Specifically, the proposed regulation would require LEAs to spend an amount equal to 20 percent of their allocation under subpart A of this part to provide or pay for the transportation of students exercising a choice option, to satisfy all requests for supplemental educational services, or a combination of the two. Proposed § 200.48 clarifies that LEAs may use funds allocated under subpart A of this part, from other Federal education programs, or from State, local, or private resources to satisfy this requirement.

Proposed § 200.48 also clarifies that if the costs of satisfying all requests for supplemental educational services exceed an amount equal to 5 percent of an LEA's allocation under subpart A of this part, the LEA may not spend less than this amount for supplemental educational services. In addition, the proposed regulations would permit—but not require—LEAs to exceed the 20 percent cap to pay all choice-related transportation costs and to meet the demand for supplemental educational services.

Reasons: Proposed § 200.48 reflects the Secretary's goal of providing clarity where the statute is ambiguous and reorganizing the statutory requirements to facilitate a better understanding of and compliance with those requirements.

Section 200.49 SEA Responsibilities for School Improvement, Corrective Action, and Restructuring

Statute: Sections 1003 and 1116 of Title I include various provisions relating to SEA responsibilities in the school improvement process. Section 1116(f) requires an SEA to ensure that LEAs serving schools identified for improvement or corrective action prior to enactment of the NCLB Act provide public school choice options and make available supplemental educational services, as appropriate, not later than the first day of the 2002–2003 school year.

Section 1003 requires SEAs to reserve two percent of the amounts received under subpart A of this part, rising to four percent in fiscal year 2004, to support local school improvement activities and to provide technical assistance to schools that LEAs have identified for improvement, corrective action, or restructuring and to LEAs that the SEA has identified for improvement or corrective action. SEAs must allocate not less than 95 percent of these funds directly to LEAs serving schools identified for improvement, corrective action, and restructuring, with a priority on LEAs serving the lowest-achieving schools and demonstrating the greatest need for assistance.

SEAs also must ensure that the results of academic assessments in a given school year are available to LEAs before the beginning of the next school year, and that such results are provided to a school before an LEA may identify the school for school improvement, corrective action, or restructuring.

Current Regulations: The current regulations governing SEA responsibilities related to school improvement reflect provisions of section 1116 of the ESEA that were superseded by the NCLB Act.

Proposed Regulations: Proposed § 200.49 repeats and reorganizes the statutory requirements related to SEA responsibilities in the school improvement process.

Reasons: Proposed § 200.49 reflects the Secretary's goal of providing clarity where the statute is ambiguous and reorganizing the statutory requirements to facilitate a better understanding of and compliance with those requirements.

Section 200.50 SEA Review of LEA Progress

Statute: Under section 1116(c) of Title I, SEAs must annually review the progress of each LEA receiving funds under subpart A of this part to determine whether the LEA is making adequate yearly progress toward meeting the State's student academic achievement standards and whether the LEA is carrying out its responsibilities under subpart A of this part with respect to technical assistance, parental involvement, and professional development. After providing an LEA with the opportunity to review academic assessment data, the SEA must identify for improvement an LEA that has failed to make adequate yearly progress for two consecutive years.

The SEA must identify for corrective action an LEA that fails to make adequate yearly progress for two consecutive years following the identification for improvement. The SEA may delay corrective action if the LEA makes adequate yearly progress for one year or if the LEA's failure to make adequate yearly progress is due to exceptional or uncontrollable circumstances, such as a natural disaster or a precipitous and unforeseen decline in the LEA's financial resources.

The SEA may remove from improvement or corrective action status an LEA that makes adequate yearly progress for two consecutive years, and may provide rewards to LEAs that exceed adequate yearly progress for two consecutive years.

Current Regulations: The current regulations governing SEA review of LEA progress reflect provisions of section 1116 of the ESEA that were superseded by the NCLB Act.

Proposed Regulations: In general, proposed § 200.50 repeats the statutory requirements related to SEA review of LEA progress in helping all students meet State academic achievement standards.

In addition, proposed § 200.50 clarifies the circumstances under which an SEA may include, in its review of an LEA serving schools operating targeted assistance programs, only the progress of students served or eligible for services under subpart A of this part. Proposed § 200.50(d)(2) clarifies the timeline for identifying LEAs for corrective action to be consistent with the statutory requirement that such identification occur prior to the beginning of the school year.

Proposed § 200.50(d) and (e) also clarify SEA discretion in identifying LEAs for improvement or removing LEAs from improvement or corrective action status on the basis of assessments administered during the 2001–2002 school year.

Reasons: Proposed § 200.50 reflects the Secretary's goal of providing clarity where the statute is ambiguous and reorganizing the statutory requirements to facilitate a better understanding of

and compliance with those requirements. Specifically, the proposed regulation clarifies the identification timeline for LEA corrective action and applies the statutory provisions for entering and exiting improvement status—two consecutive years of failure to make adequate yearly progress and two consecutive years of making adequate yearly progress, respectively—to LEAs not covered by the transition language in section 1116(f) of the NCLB Act.

Section 200.51 Notice of SEA Action

Statute: Under section 1116(c) of Title I, an SEA must publicize and disseminate the results of its review of an LEA to the LEA, teachers and other staff, parents, students, and the community. If an SEA identifies an LEA for improvement or corrective action, it must provide to the parents of each student enrolled in a school served by the LEA the reasons for the identification and an explanation of how the parents can participate in upgrading the LEA. The SEA also must publish and disseminate to parents and the public information on any corrective action it takes against an LEA.

Current Regulations: The current regulations governing SEA notice requirements related to its review of LEA progress reflect provisions of section 1116 of the ESEA that were superseded by the NCLB Act.

Proposed Regulations: In general, proposed § 200.51 restates the statutory notice requirements triggered when an SEA reviews the progress of an LEA under § 200.50. Proposed § 200.51 also clarifies the manner in which SEAs must meet these notification requirements by providing guidelines for all communications with parents. These guidelines include the use of an understandable and uniform format for all required notices; the provision, to the extent practicable, of all notices in a language that parents can understand; the use of direct means of communication, such as sending materials home with students, as well as broader electronic means such as the Internet; and assurances that all notices respect the privacy of students and their families.

Reasons: Proposed § 200.51 reflects the Secretary's goal of providing clarity where the statute is ambiguous and reorganizing the statutory requirements to facilitate a better understanding of and compliance with those requirements. The proposed regulations would help ensure that SEAs develop a uniform approach for communicating with parents throughout the LEA review and improvement process.

Section 200.52 LEA Improvement; and § 200.53 LEA Corrective Action

Statute: Under section 1116(c) of Title I, if an SEA identifies an LEA for improvement, the LEA must develop or revise an LEA improvement plan that incorporates scientifically based strategies to strengthen instruction in core academic subjects in schools served by the LEA, addresses the professional development needs of the LEA's instructional staff by reserving for that purpose not less than 10 percent of the funds received by the LEA under subpart A of this part, and includes specific measurable goals and targets consistent with adequate yearly progress requirements. The improvement plan also must incorporate extended learning time strategies, specify LEA and SEA responsibilities under the plan, and promote effective parental involvement. At the request of the LEA, the SEA must provide or arrange for technical or other assistance in developing and implementing the improvement plan. The LEA must implement its improvement plan not later than the beginning of the school year after the school year in which the SEA identified the LEA for improvement.

If an SEA identifies an LEA for corrective action, it must continue to make available technical assistance to the LEA and take at least one of the corrective actions specified in the statute. These corrective actions include deferring programmatic funds or reducing administrative funds, instituting a new curriculum, replacing LEA personnel, removing particular schools from the jurisdiction of the LEA and establishing alternative governance for these schools, appointing a receiver or trustee to administer the LEA in place of the superintendent and school board, and abolishing or restructuring the LEA. In addition, in conjunction with at least one of these actions, the SEA may authorize students to transfer, with transportation provided, from a school operated by the LEA to a higher-performing public school operated by another LEA.

Current Regulations: The current regulations governing LEA improvement and corrective action reflect provisions of section 1116 of the ESEA that were superseded by the NCLB Act.

Proposed Regulations: In general, §§ 200.52 and 200.53 restate the statutory requirements for LEA improvement and corrective action. Proposed § 200.52(a)(4) also clarifies that an LEA must implement its improvement plan not later than the beginning of the school year following the year in which the LEA administered the assessments that resulted in the SEA's identification of the LEA for improvement.

Reasons: Proposed §§ 200.52 and 200.53 reflect the Secretary's goal of providing clarity where the statute is ambiguous and reorganizing the statutory requirements to facilitate a better understanding of, and compliance with, those requirements. Proposed § 200.52(a)(4) clarifies the deadline for implementation of an LEA's improvement plan to be consistent with the statutory requirement that such implementation occur prior to the beginning of the school year following the identification for improvement.

Section 200.54 Rights of School and School District Employees

Statute: Section 1116(d) of Title I provides that none of the requirements concerning school and LEA improvement, corrective action, and restructuring shall be construed to alter or otherwise affect the rights, remedies, and procedures afforded school or LEA employees under Federal, State, or local law (including applicable regulations or court orders) or under the terms of collective bargaining agreements, memoranda of understanding, or other agreements between the employers and their employees.

Current Regulations: The current regulations do not address this requirement.

Proposed Regulations: Section 200.54(a) implements the statutory provision with respect to State or local laws or collective bargaining agreements in effect on January 8, 2002—the day the NCLB Act was signed into law. Section 200.54(b) makes clear, however, that any State or local laws, regulations, or policies adopted after January 8, 2002 may not exempt an LEA from taking actions it may be required to take by §§ 200.30–200.53 with respect to school and LEA employees. Similarly, § 200.54(c) requires an LEA to ensure that any collective bargaining agreements, memoranda of understanding or other similar agreements negotiated after January 8, 2002 do not prohibit actions that the LEA may be required to take with respect to school or school district employees to implement §§ 200.30–200.53.

Reasons: These proposed regulations are necessary to clarify that the statutory provision applies to laws, regulations, and agreements in effect on January 8, 2002. States and LEAs, however, have affirmative responsibilities to ensure that laws, regulations, policies, and agreements that take effect after January 8 do not prohibit actions that an LEA or

State may be required to take to implement §§ 200.30–200.53.

Qualifications of Teachers and Paraprofessionals

Sections 200.55 through 200.57 Highly Qualified Teachers

Statute: Under section 9101(23) of the ESEA, a highly qualified teacher in any public elementary or secondary school must hold at least a bachelor's degree and either (1) have obtained full State teacher certification or (2) have passed the State teacher licensing examination and hold a license to teach in that State. A teacher in a public charter school may instead meet the certification or licensure requirements of the State's public charter school law. No highly qualified teacher may have his or her certification or licensure requirements waived on an emergency, temporary, or provisional basis.

Section 9101(23) of the ESEA contains additional requirements for a highly qualified teacher depending on which grade level the teacher teaches and whether the teacher is new to the profession. An elementary school teacher who is new to the profession must have demonstrated subject knowledge and teaching skills in reading, writing, mathematics, and other areas of the basic elementary school curriculum by passing a rigorous State test. Passing a rigorous State test can mean passing a State-required certification or licensing test or tests in reading, writing, mathematics, and other areas of the basic elementary school curriculum.

A middle or secondary school teacher who is new to the profession must have demonstrated a high level of competency in each academic subject that he or she teaches by (1) passing a rigorous State academic subject test in each of those subjects or (2) successfully completing, in each of those subjects, an academic major, coursework equivalent to an undergraduate academic major, a graduate degree, or advanced certification or credentialing. Passing the rigorous State test can mean receiving a passing level of performance on a State-required certification or licensing test or tests in each of the academic subjects that the teacher teaches.

To be highly qualified, an elementary, middle, or secondary school teacher who is not new to the profession must meet the applicable requirements for a new teacher or must demonstrate competence in all academic subjects that he or she teaches based on a high objective uniform State standard of evaluation. To be considered a high objective uniform standard of evaluation, the State standard may involve multiple, objective measures of teacher competency and must satisfy these six criteria:

- Be set both for grade-appropriate academic subject matter knowledge and for teaching skills.
- Be aligned with challenging State academic content and student academic achievement standards and developed through consultation with core content specialists, teachers, principals, and school administrators.
- Provide objective and coherent information about the teacher's attainment of the core content knowledge in the applicable academic subject.
- Be applied uniformly to all teachers in the same academic subject and grade level throughout the State.
- Take into consideration, although not primarily, the time the teacher has been teaching the subject.
- Be available to the public on request.

Under section 1119(a)(1) of the ESEA, beginning with the first day of the 2002–2003 school year, each LEA receiving assistance under Title I, part A is responsible for applying these requirements to any public school teacher in a core academic subject supported by part A funds who is hired after that day. The LEA also must have a plan to ensure that all public school teachers teaching in core academic subjects in the LEA meet these requirements by the end of the 2005–2006 school year.

At the State level, section 1119(a)(2) of the ESEA requires each State to develop a plan to ensure that all teachers teaching in core academic subjects in the State meet these requirements by the end of the 2005–06 school year. The State plan must set annual measurable objectives for each LEA and school. At a minimum, these objectives must provide for an increase in the percentage of highly qualified teachers in each LEA and school and an annual increase in the percentage of teachers receiving high-quality professional development toward becoming highly qualified and successful. The objectives may include other appropriate measures to improve teacher qualifications.

Proposed Regulations: In addition to incorporating the statutory provisions described above, proposed §§ 200.55 through 200.57 would clarify that the requirements for teacher qualifications apply to teachers in core academic subjects. Proposed § 200.55(a)(2) would clarify that a teacher in a program supported by funds under subpart A of this part is a teacher in a targeted assistance program paid with Title I, part A funds and any teacher in a schoolwide program. Proposed § 200.56(a)(1)(iii) would clarify that a teacher meets the full certification and licensure requirements applicable to the years of experience the teacher possesses. For example, a first-year teacher would meet this requirement if State law requires that teacher to work on a probationary basis for a limited time. Proposed § 200.56(a)(1)(iii) would also clarify that a teacher meets the alternate route certification program requirements if the State permits the teacher to assume functions as a teacher and if the teacher is making satisfactory progress toward full certification as prescribed by the State and the program.

A teacher who does not teach a core academic subject, or an employee of a third-party contractor or supplemental services provider, would not be required to meet the teacher qualification requirements.

Reasons: Most of the provisions in proposed §§ 200.55 through 200.57 would clarify unclear areas of the statute. Exempting teachers who do not teach in core academic subjects from the teacher qualification requirements, for example, would recognize and encourage the traditional flexibility that States have exercised in setting qualification standards in such areas as vocational education. Yet extending this flexibility would not jeopardize the statute's overall objective of ensuring that, through high-quality instruction, all students reach proficient levels of State academic student achievement standards.

Sections 200.58 through 200.59 Paraprofessionals

Statute: Section 1119(c) through (g) of the ESEA contains requirements that apply to all paraprofessionals working in a program supported with Title I, part A funds and specify how each LEA receiving assistance under part A must ensure that those paraprofessionals meet those requirements.

Under section 1119(a), each paraprofessional hired after January 8, 2002, must have—

(1) Completed at least two years of study at an institution of higher education;

(2) Obtained an associate's or higher degree; or

(3) Met a rigorous standard of quality and be able to demonstrate, through a formal State or local academic assessment, knowledge of, and the ability to assist in instructing reading, writing, and mathematics or, as appropriate, in reading readiness,

writing readiness, and mathematics readiness.

Section 1119(d) requires a paraprofessional hired before January 8, 2002, to meet these requirements within four years of that date. Section 1119(e) excepts from these requirements a paraprofessional who serves primarily as a translator, if the paraprofessional is proficient in English and a language other than English. Section 1119(e) also excepts a paraprofessional working solely on parental involvement activities.

Section 1119(f) of the ESEA requires all paraprofessionals, regardless of hiring date, to have earned a secondary school diploma or the recognized equivalent.

Section 1119(g) of the ESEA specifies that a paraprofessional may provide one-on-one tutoring for eligible students, provided the tutoring is scheduled at a time when a student would not otherwise receive instruction from a teacher; assist with classroom management, such as organizing instructional and other materials; provide assistance in a computer laboratory; conduct parental involvement activities; provide support in a library or media center; act as a translator; or provide, under the direct supervision of a teacher, instructional services.

Section 1119(g)(3) allows a paraprofessional to assume limited duties assigned to similar personnel who do not work in a program supported with part A funds. Those duties may include duties beyond classroom instruction or duties that do not benefit participating children, if the paraprofessional spends the same proportion of time on those duties that similar personnel in the school spend on the same duties.

Proposed regulations: Proposed §§ 200.58 and 200.59 would incorporate the statutory provisions governing paraprofessionals. In addition, proposed § 200.58(a)(2) would clarify that the term ''paraprofessional'' applies to an individual performing instructional support duties and not to an individual performing only non-instructional duties. Proposed § 200.58(a)(3) would clarify that a paraprofessional in a program supported by funds under subpart A of this part means a paraprofessional in a targeted assisted program paid with those funds and any paraprofessional in a schoolwide program.

Proposed § 200.59(b) would clarify the duties that paraprofessionals may perform. Proposed § 200.59(c)(2) would clarify that a paraprofessional works under the direct supervision of a teacher if the teacher plans the paraprofessional's instructional activities and evaluates the achievement of the students with whom the paraprofessional works. The paraprofessional also would be required to work in close physical proximity of the teacher.

Reasons: The clarifications in proposed §§ 200.58(a)(2) and 200.59(b) would reinforce the consistent application of the statutory concept that paraprofessional qualification requirements apply to the performance of instructional support duties. The clarification in proposed § 200.59(c)(2) on what would constitute working under the direct supervision of a teacher is intended to reinforce the statutory safeguards against the improper use of paraprofessionals to provide actual instruction.

Section 200.60 Expenditures for Professional Development

Statute: Section 1119(h) allows an LEA to use funds under Title I, part A for ongoing training and professional development to help teachers and paraprofessionals meet the new statutory requirements governing their qualifications.

Section 1119(l) requires the LEA, for each of fiscal years 2002 and 2003, to use a minimum of 5 percent and a maximum of 10 percent of its part A funds for professional development aimed at ensuring that teachers who are not qualified become highly qualified by the end of the 2005–2006 school year. For each subsequent fiscal year, the LEA must use a minimum of 5 percent of its part A funds for that purpose. Section 1119(j) of the ESEA permits an LEA to combine part A funds used for professional development with other Federal funds, including those from Title II of the ESEA, and funds from other sources.

Section 1119(k) prohibits a State from mandating, beyond the amounts specified in section 1119(l), the specific amount that an LEA, other than an LEA identified for improvement, may spend for professional development.

Proposed Regulations: Proposed § 200.60(a) would clarify that professional development funds may be used for paraprofessionals, as well as teachers. It also would clarify that the statutory minimum would not apply to an LEA, if most teachers and paraprofessionals in the LEA's school district already meet the statutory qualification requirements. Proposed § 200.60(b) would clarify that an LEA may use additional funds under subpart A of this part for ongoing training and professional development to help teachers and paraprofessionals carry out their subpart A activities.

Reasons: Proposed § 200.60(a) is needed to ensure consistent application of the requirements in section 1119 and elsewhere in the ESEA that permit flexibility in the use of funds for professional development. The requirements in section 1119 contemplate that an LEA will give priority for the use of professional development expenditures to helping teachers and paraprofessionals meet the requirements for highly qualified teachers and the qualifications for paraprofessionals, respectively. Nevertheless, in cases where that priority has been met, and to help teachers and paraprofessionals carry out their activities under subpart A, funds under subpart A remain available, notwithstanding the mandated percentages in section 1119, to an LEA for ongoing training and professional development.

Participation of Eligible Children in Private Schools

Statute: Section 1120 of Title I requires LEAs to provide on an equitable basis educational services or other benefits (1) to eligible children attending private schools; and (2) to the teachers and families of these children in Title I—supported parent involvement and professional development activities. It requires LEAs to develop these services in consultation with officials of the private schools and prescribes how an LEA determines that it is providing services on an equitable basis.

Current Regulations: The current regulations governing equitable participation of eligible children in private schools (34 CFR 200.10 through 200.13) implement provisions of section 1120 of the ESEA that were superseded by the NCLB Act.

Proposed Regulations: Proposed §§ 200.61 through 200.66 contain several provisions to address changes in the statute from the previous law and to clarify issues about which questions have arisen in the past. The proposed regulations would—

- Reiterate which children an LEA must serve;
- Clarify the equal expenditure requirement for instructional services;
- Define equitable expenditures for teachers and families of participating private school children;
- Require consultation on specified topics and expand those topics to include equitable services to teachers and families of participating private school students; and

• Clarify the flexibility that exists for private school officials to appoint representatives for consultation and sign-off purposes.

Additionally, the proposed regulations would remove regulations governing capital expenses (currently contained in §§ 200.15 through 200.17), because the authority for capital expenses expires October 1, 2003 and no funds were appropriated for fiscal year 2002.

Reasons: The existing regulations need to be updated to reflect the changes made by the NCLB Act. The proposed regulations also facilitate implementation of the requirements for providing services to eligible private school students, their teachers, and their families by ensuring that both public and private school officials have consistent and accurate information to implement fully the requirements of this section. Finally, the proposed regulations remove current provisions that are no longer needed.

Allocations to LEAS

Statute: Title I, part A, subpart 2 establishes the formulas the Secretary must use to determine LEA allocations for Basic Grants, Concentration Grants, Targeted Grants, and Education Finance Incentive Grants (EFIG). The Secretary makes allocations to LEAs for all four programs using data that include children ages 5 through 17 in families with incomes below the poverty line based on the most recent satisfactory data available from the Census Bureau, in families not in poverty but receiving assistance under the Temporary Assistance for Needy Families program, in foster homes, and in locally operated institutions for neglected children. These data are then adjusted to account for each State's per-pupil expenditure for education. The Targeted Grants program further requires that the Secretary adjust the number of children counted in the formula to give greater weight to those LEAs that have higher numbers or percentages of formula children. The formula for EFIG, in addition to including the number of children counted in the Title I formula and each State's per-pupil expenditure, uses two other factors that measure (1) a State's effort to provide financial support for education compared to its relative wealth based on its per capita income (fiscal effort factor) and (2) the degree to which education expenditures among school districts within a State are equalized (equity factor). Once a State's EFIG allocation is determined using all four of these factors, the Secretary distributes funds among LEAs within a State using a process similar to Targeted Grants by giving a greater weight to those LEAs that have higher numbers or percentages of formula children. The weights used to determine EFIG allocations for each LEA will vary for each State depending on its equity factor. After initial LEA allocations are determined for all four programs using the factors described, the Secretary must guarantee that no LEA (depending on its formula child rate) receives less than 85, 90, or 95 percent of the amount allocated to it in the preceding year and ensure that no State in total receives less than the minimum amount prescribed in the statute.

Title I further authorizes States to use alternative data to determine eligibility and redistribute allocations that the Secretary determined for its ''small'' LEAs with fewer than 20,000 residents. This provision in the law responds to concerns about the quality of census poverty estimates for small LEAs, which account for roughly 79 percent of all districts nationally, but serve only 24 percent of all school-age children. Under this provision, SEAs have the flexibility to use alternative data, which the Secretary must approve, that better reflect the location of poor children among small LEAs in a State.

Current Regulations: The current regulations (contained in 34 CFR 200.20 through 200.26) outline procedures that an SEA uses to sub-allocate county Title I, part A allocations determined by the Secretary to LEAs. Because the Secretary now makes Title I, part A allocations directly to LEAs rather than to counties, these regulations are no longer applicable and would be replaced by the proposed regulations.

Proposed Regulations: Proposed §§ 200.70 through 200.75 would outline procedures SEAs must follow to adjust allocations determined by the Secretary to account for unique situations within their States.

Proposed § 200.70 would outline the general process that the Secretary follows to determine Title I, part A LEA allocations and establish the principle that an SEA may change those allocations in limited instances.

Proposed § 200.71 would clarify the eligibility thresholds for Basic Grants, Concentration Grants, Targeted Grants, and EFIG. For Basic Grants, an LEA is eligible if the number of children counted for allocation purposes is at least 10 and exceeds two percent of its school-age population ages 5 through 17. An LEA is eligible for a Concentration Grant if it is eligible for a Basic Grant and the number of formula children exceeds 6,500 or 15 percent of its school-age population. To be eligible for a Targeted Grant and EFIG, an LEA must have at least 10 formula children and a formula child rate of at least 5 percent. Targeted Grant and EFIG eligibility is based on the raw number of formula children without application of the weights provided in the statute.

Proposed § 200.72 would establish the general procedures an SEA must follow to adjust allocations determined by the Secretary to account for eligible ''new'' LEAs not on the Census list that the Secretary used to calculate LEA allocations and to reflect changes in district boundaries. Under this section, an SEA must first determine the number of Title I formula children for new LEAs that are not on the Secretary's list of LEAs, second determine the eligibility of these new LEAs for a Basic, Concentration, Targeted, and EFIG based on that number, and third provide the new LEAs with Title I funds based on the number of formula children that they draw from the LEAs that are on the Secretary's list for which the Department made allocations.

Proposed § 200.73 would outline the statutory ''hold-harmless'' provisions more clearly. The hold-harmless protection limits the maximum reduction in an LEA's allocation when compared to its prior year's allocation. Under each program, an LEA is guaranteed at least 85, 90, or 95 percent of the amount received in the preceding year. The hold-harmless percentage varies according to each LEA's formula child rate. For Targeted Grants and EFIG, the hold-harmless percentage is based on formula counts without application of the weights. Except when an SEA is calculating LEA reductions to account for reserves for school improvement, State administration, and the State academic achievement awards program, the hold-harmless percentage is applied separately for Basic Grants, Concentration Grants, Targeted Grants, and EFIG. With the exception of Concentration Grants, an LEA must be eligible for Basic Grants, Targeted Grants, and EFIG in order for the hold-harmless protection to apply. For Concentration Grants an LEA is entitled to its hold-harmless percentage based on its prior year amount for four consecutive years even if it no longer meets the eligibility thresholds.

Proposed § 200.74 would clarify the statutory procedures an SEA would follow if it chooses to use an alternative method to redistribute Title I, part A grants to LEAs with fewer than 20,000 total residents. Language in proposed § 200.74(a) would extend this flexibility to EFIG.

Proposed § 200.75 would outline the flexibility available to States in which their Title I formula count on January 8,

2002 makes up less than .25 percent of the national total. These ''small'' States may redistribute Concentration Grant allocations determined by the Secretary to LEAs in which the number or percentage of formula children equals or exceeds the Statewide average number or percentage.

Reasons: The proposed regulations are needed to give guidance to States on how to adjust the LEA allocations determined by the Secretary to account for circumstances unique to each State. The Secretary determines LEA allocations directly using a list of LEAs provided to us by the Census Bureau, which is based on LEAs that existed in school year 1999–2000. Because that list does not match the current universe of LEAs in many States, SEAs must adjust the Secretary's LEA allocations to account for newly created LEAs (*e.g.* charter schools and LEA consolidations) and district boundary changes. An SEA must also adjust our allocations to (1) reserve funds for school improvement, State administration, and the State academic achievement awards programs, (2) allow for the use of alternative data to redistribute Title I allocations determined by the Secretary among districts with fewer than 20,000 total residents, and (3) in the case of ''small'' States, redistribute Concentration Grant allocations determined by the Secretary to LEAs in which the number or percentage of formula children equal or exceed the Statewide average number or percentage of formula children.

In outlining SEA procedures for adjusting our allocations in the proposed regulations, we have tried to give SEAs as much flexibility as possible. For example, in proposed § 200.72 concerning a State's use of alternative data to redistribute allocations determined by the Secretary, we believe it appropriate to extend that flexibility to EFIG even though the statute specifically authorizes this flexibility only for Basic, Concentration, and Targeted Grants.

Section 200.78 Allocation of Funds to School Attendance Areas and Schools

Statute: Section 1113 of the Title I statute lays out the procedures an LEA must use to determine school-level Title I allocations once it receives its final allocation from the State. In calculating school-level allocations, an LEA must first determine which school attendance areas or schools are eligible to participate in Title I. As a general rule, a school attendance area is eligible if its percentage of children from low-income families is above 35 percent poverty or is at least as high as the percentage of children from low-income families in the LEA as a whole. An LEA may also serve a school in an ineligible area if the percentage of children from low-income families enrolled in that school is equal to, or greater than, the percentage of such children in a participating school attendance area. The statute also allows an LEA to continue serving an attendance area or school for one more year if it has become ineligible.

An LEA must serve eligible schools or attendance areas in rank order according to their poverty percentage. An LEA must serve those areas or schools above 75 percent poverty, including any middle or high schools, before it serves any with a poverty percentage below 75 percent. Once all of the attendance areas or schools with a poverty rate above 75 percent have been served, an LEA may serve lower-poverty areas and schools either by continuing with the district-wide ranking or by ranking its areas or schools below 75 percent poverty according to grade-span groupings.

When calculating the total number of children from low-income families, the LEA must include children from low-income families who reside in a participating area and attend private schools. If the same poverty data for public and private school children are not available, an LEA may use comparable poverty data for private school children. If complete actual poverty data are not available on private school children, an LEA may extrapolate, from actual data on a representative sample of private school children, the number of children from low-income families who attend private schools. An LEA may also correlate sources of data or apply the low-income percentage of each participating public school attendance area to the number of private school children who reside in that area. If an LEA selects a public school to participate on the basis of enrollment, rather than because it serves an eligible school attendance area, the LEA must determine an equitable way to count poor private school children in order to calculate the amount of Title I funds available to serve private school children. In making this determination an LEA must consult with private school officials.

If an LEA serves any attendance area with a poverty rate less than 35 percent, the LEA must allocate to all its participating school attendance areas or schools an amount per poor child that equals at least 125 percent of the LEA's part A allocation per poor child. If an LEA serves only areas with a poverty rate greater than 35 percent, it must allocate funds in rank order on the basis of the total number of poor children in each area or school but is not required to allocate a per-pupil amount of at least 125 percent.

Proposed Regulations: Proposed §§ 200.77 and 200.78 would clarify the within-district allocation procedures in section 1113 of the statute. Because the section 1113 requirements in the new law are largely the same as the old law, the proposed regulations change little from the old regulations.

Proposed § 200.77 would clarify what funds an LEA must reserve before allocating funds to school attendance areas and schools. An LEA must, for example, reserve funds needed to provide comparable services to children in local institutions for neglected children and for homeless children. An LEA is also required to reserve funds, as appropriate, to meet the (1) transportation and supplemental services requirements in § 200.48, unless the LEA meets those requirements with non-Title I funds, (2) the professional development requirements for LEAs identified for improvement under section 1116(c)(7)(A)(iii), (3) the professional development needs of teachers who are not highly qualified under section 1119(l), and (4) the parental support and involvement requirements in section 1118(a)(3)(A). An LEA may further reserve funds to meet the needs of children in local institutions for delinquent children and of neglected or delinquent children in community day school programs, to provide financial incentives and rewards (not to exceed 5 percent of the amount received by the LEA under Title I, part A) for teachers who serve schools identified for improvement, and to conduct other authorized activities such as school improvement and coordinated services.

Reasons: The proposed regulations are needed to clarify statutory provisions concerning how LEAs allocate Title I funds within school districts.

Fiscal Requirements

Section 200.79 Exclusion of Supplemental State and Local Funds From Supplement, Not Supplant and Comparability Determinations

Statute: Under section 1120A(d) of Title I, an LEA may exclude supplemental State and local funds from supplement, not supplant and comparability determinations if those supplemental funds meet the intent and purposes of Title I.

Current Regulations: Section 200.63 of the current regulations clarifies a similar provision in the old law by describing what criteria a State or local program

must meet in order to be excluded from supplement, not supplant and comparability determinations.

Proposed Regulations: Proposed § 200.79 would continue the provisions contained in § 200.63 of the current regulations by clarifying the criteria a State or local program must meet in order to be excluded from supplement, not supplant and comparability determinations. Section 200.79(b)(1)(i) reflects the change in the poverty threshold for schoolwide programs under section 1114.

Reasons: Proposed § 200.79 is needed to provide continued guidance to LEAs on what criteria a State or local program must fulfill in order to meet the intent and purposes of Title I.

Subpart C—Migrant Education Program

Subpart C of this part contains the program-specific regulations for the Migrant Education Program (MEP) authorized under Title I, part C of the statute. The proposed MEP regulations contained in §§ 200.81 through 200.88 are intended to clarify ambiguous or unclear provisions of the statute and replace §§ 200.40 through 200.45 of the current regulations.

Section 200.81 Program Definitions

Statute: Section 1309 of Title I provides a basic definition of a ''migratory child.''

Current Regulations: The current regulations (contained in 34 CFR 200.40) provide definitions of several additional terms that are necessary to interpret the statutory definition of a ''migratory child.''

Proposed Regulations: Proposed § 200.81 would make no changes to these additional program definitions included in the current regulations.

Reasons: The program definitions are included in these proposed regulations solely to provide, in one place, a complete set of the regulations published for subpart C.

Section 200.82 Use of Program Funds for Unique Program Function Costs

Statute: Section 1302 of Title I provides the authority for SEAs to operate the MEP either directly or though local operating agencies. This authority means that the MEP, unlike the Title I, part A program, is a State-operated, not simply a State-administered, program and, as such, may carry out particular operational functions that are unique to the program and beyond those usually carried out by SEAs under Title I, part A.

Current Regulations: The current regulations (contained in 34 CFR 200.41) clarify that SEAs may use MEP funds to carry out ''other administrative activities,'' beyond those normally paid for by the SEA using its general Title I administrative set-aside funds. These ''other administrative activities'' are those that are unique to the MEP, including activities that are the same as, or similar to, those carried out by an LEA under Title I, part A. The current regulations provide several examples of such unique program costs.

Proposed Regulations: Proposed § 200.82 would repeat the current regulations, except that proposed § 200.82(e) has been revised to clarify that MEP funds may be used for the administrative aspects of developing the statewide needs assessment and comprehensive State plan that are required in section 1306(a) of the statute and proposed § 200.83.

Reasons: The revision to § 200.82(e) is intended to emphasize that SEAs may use MEP funds to conduct the statewide needs assessment and develop the statewide service delivery plan required under section 1306(a) of the statute and proposed § 200.83.

Section 200.83 Responsibilities of SEAs To Implement Projects Through a Comprehensive Needs Assessment and a Comprehensive State Plan for Service Delivery

Statute: Under section 1306(a) of Title I, each SEA receiving MEP funds must identify and address the special educational needs of migrant children in accordance with a comprehensive needs assessment and service delivery plan.

Proposed Regulations: Proposed § 200.83 would clarify the responsibilities of an SEA receiving MEP funds regarding development of a comprehensive needs assessment and service delivery plan. The proposed regulations would clarify that SEAs must deliver and evaluate MEP-funded services to migratory children based on a written plan that reflects the results of a current statewide needs assessment and identified performance targets. The proposed regulations would further clarify that this plan must be developed in consultation with the parents of migratory children, and that this requirement is applicable to both SEAs and their local operating agency projects.

Reasons: The provisions in proposed § 200.83 would outline to grantees the minimum requirements the Secretary believes necessary for the development of a comprehensive needs assessment and plan for service delivery required by section 1306(a) of Title I.

Section 200.84 Responsibilities of SEAs for Evaluating the Effectiveness of the MEP

Statute: Section 1304(c)(5) of Title I requires SEAs to provide an assurance that the effectiveness of the State MEP be determined, where feasible, using the same approaches and standards that will be used to assess Title I, part A.

Current Regulations: The current regulations (contained in 34 CFR 200.42) define the responsibilities of SEAs and their local projects in regard to assessing the effectiveness of their operations using the content and performance standards and, where possible, the assessments that the State has established for all children. The current regulations also note that, where it is not feasible to use the assessments the State has established for all children, *e.g.,* in short-term summer projects, the SEA and the local project still have a responsibility to use a reasonable process for assessing the effectiveness of the project.

Proposed Regulations: Proposed § 200.84 renames and simplifies the language of the regulatory requirements to clarify that SEAs have a responsibility to evaluate the MEP in terms of the performance targets established for migratory children in proposed § 200.83.

Reasons: The provisions of proposed § 200.84 simplify the regulatory language and align it with the requirements of proposed § 200.83.

Section 200.85 Responsibilities of SEAs and Operating Agencies for Improving Services to Migratory Children

Statute: Section 1304(b)(1)(D) of the new statute requires that measurable goals and outcomes be used when planning and implementing State and local MEP projects to address the needs of migratory children.

Current Regulations: The current regulations (contained in 34 CFR 200.43) explain that, while the specific school improvement requirements of section 1116 of the statute do not apply to the MEP, SEAs and their local projects are required to use assessment results to improve the design of services provided to migratory children.

Proposed Regulations: In proposed § 200.85, a minor conforming change has been made to the language of the current regulations that would clarify that it is the results of the evaluations conducted under proposed § 200.84 that are to be used to improve the design of services to migratory children.

Reasons: The minor conforming change is necessary to establish the

correct reference to the evaluations to be conducted under proposed § 200.84.

Section 200.86 Use of MEP funds in Schoolwide Projects

Statute: The new statute sets a new and higher threshold for combining MEP funds with other funds in a schoolwide program. Section 1306(b)(4) of Title I now requires that a schoolwide program that receives MEP funds must not only continue to ''address'' the identified needs of migratory children (as was required under the prior statute) but now must also ''meet'' these identified needs before it can combine the MEP funds with other funds in the schoolwide program. This new statutory requirement would be addressed in § 200.28 of the proposed subpart A regulations.

Current Regulations: The current regulations (contained in 34 CFR 200.44) note that a schoolwide program may combine MEP funds with other funds subject to meeting the requirements found in current § 200.8(c)(3)(ii)(B)(*1*).

Proposed Regulations: In proposed § 200.86, a minor conforming change would be made to clarify that the requirements for combining MEP funds are now to be found in proposed § 200.28(c)(3)(i) of the proposed subpart A regulations.

Reasons: The minor conforming change is necessary to establish the correct reference to the requirements of proposed § 200.28(c)(3)(i).

Section 200.87 Responsibilities for Participation of Children in Private Schools

Statute: Section 1304(c)(2) of Title I eliminates the reference, in the prior statute, to the applicability of section 1120 (Participation of Children in Private Schools) of Title I to the MEP. Instead, section 9501(b) of the new statute makes the private school provisions of section 9501 of the statute applicable to the MEP.

Current Regulations: The current regulations (contained in 34 CFR 200.45) note that the provisions of section 1120 regarding the participation of private school children are applicable to the MEP.

Proposed Regulations: In proposed § 200.87, a minor conforming change has been made that would clarify that the provisions regarding the participation of children in private schools contained in section 9501 of the new statute apply to the MEP.

Reasons: The minor conforming change is necessary to establish the correct reference to the requirements of section 9501 of the new statute.

Section 200.88 Exclusion of Supplemental State and Local Funds From Supplement, not Supplant and Comparability Determinations

Statute: Section 1120A(b) and (c) of the statute define the ''comparability'' and ''supplement, not supplant'' requirements that apply to Title I, part A. Subsection (d) of section 1120A provides an exception to the ''comparability'' and ''supplement, not supplant'' requirements for State and local funds that are expended for programs that meet the intent and purposes of Title I. The assurances in section 1304(c)(2) of Title I, in turn, adopt, by reference, the ''comparability'' and ''supplement, not supplant'' requirements in section 1120A.

Current Regulations: The current regulations (contained in 34 CFR 200.63) implement the exclusion from both the ''comparability'' and ''supplement, not supplant'' requirements in section 1120A(d), and, because of section 1304(c)(2), make that exclusion applicable, as a general regulatory provision, to the MEP as well as to Title I, part A. The exclusion is only for State and local funds spent for programs that meet the intent and purposes of Title I. That is, under current § 200.63(b), a State or local program is considered to meet the intent and purposes of Title I if it has basic aspects of the Title I, part A program—*e.g.,* if implemented in any schoolwide program or school that: (1) serves only children failing or at risk of failing to achieve to high standards, (2) provides supplementary educational services to meet the special educational needs of participating children, and (3) uses the State's system of assessments.

Proposed Regulations: Proposed § 200.88 would clarify that, for purposes of the MEP, only ''supplemental'' State or local funds that are used for programs specifically designed to meet the unique needs of migratory children may be excluded in terms of determining compliance with the ''comparability'' and ''supplement, not supplant'' provisions of the statute.

Reasons: In the past few years, the Department has learned of situations in which, with State approval, one or more LEAs paid the costs of their summer programs with a mixture of State compensatory education program funds and MEP funds. While these programs served both migratory and non-migratory children, they paid for a portion of services available to migrant students out of their MEP funds, excluding them from the level of services provided with the State compensatory education program funds to non-migratory children. While this arrangement is consistent with the letter of current § 200.63 as written, the Department believes that it violates the intent of section 1304(c)(2) of the statute.

The broad purpose of the section 1120A statutory exclusion is to encourage States and LEAs to use their own funds to support supplemental programs without concern for ''comparability'' and ''supplement, not supplant'' considerations. The Department believes that the requirement in section 1304(c)(2), that the MEP be implemented ''in a manner consistent with the objectives of'' the section 1120A ''comparability'' and ''supplement, not supplant'' requirements, is best interpreted, for purposes of the MEP, to exclude only State and local funds used in programs that are specifically designed, like the MEP itself, to serve migratory children. Proposed § 200.88 would serve to establish this reasonable interpretation through regulations.

Subpart D—Prevention Programs for Children and Youth Who Are Neglected, Delinquent, or At-risk of Dropping Out

Statute: Title I, part D of the ESEA authorizes two programs that address the needs of neglected, delinquent, and at-risk children and youth. The basic provisions of this part of the new law are the same as the old law. Subpart l of part D establishes the State agency Neglected or Delinquent (N or D) program, which provides Federal financial assistance to State agencies that operate educational programs for children and youth in institutions or community day programs for N or D children and for youth in adult correctional facilities. Subpart 2 of part D authorizes a program that provides assistance to LEAs to serve children and youths who are in locally operated correctional facilities (including institutions for delinquent children) or are at risk of dropping out of school. Funds for this program are generated by counts of children, which the Department collects annually for Title I, part A purposes, that live in locally operated institutions for delinquent children or are in locally operated correctional facilities. States award Subpart 2 funds to LEAs with high numbers or percentages of youth residing in correctional facilities or institutions for delinquent children to conduct programs that provide an array of services to meet the special needs of at-risk children and youth.

Current Regulations: The current regulations in 34 CFR 200.50 and 200.51 contain several specific program

definitions and set out requirements for SEAs to follow when providing the Department with enrollment data used to determine State agency N or D allocations.

Proposed Regulation: The proposed regulations would continue the regulations with no change in policy.

Reasons: The Department needs the proposed regulations in order to collect the annual data used for determining part D, Subpart 1 allocations, and to provide guidance and clarification about the children, who are eligible for services under part D, subpart 2.

The definitions in proposed § 200.90 would ensure that the data used by the Secretary to allocate funds are based on common definitions. For example, the definition of a regular program of instruction is included to ensure that the children counted are enrolled in actual educational programs that involve classroom instruction supported by State funds. The definitions of institutions for neglected or delinquent children and youth further require that the average length of stay in the institution be at least 30 days. This continues current policy and ensures that the children counted for allocation purposes are in an institution for a sufficient length of time so that educational services provided by the institution can be effective.

Proposed § 200.92, which outlines the requirements for an SEA in providing the Department with enrollment data for use in determining State Agency N or D allocations, clarifies, for example, how States adjust their enrollment counts to account for the length of the school year as required by the statute.

Subpart E—General Provisions Section 200.100 Reservation of Funds for School Improvement, State Administration, and the State Academic Achievement Award Program; and § 200.103 Definitions

Statute: Section 1003 of Title I requires that an SEA reserve two percent of its funds received under Title I, part A for school improvement activities authorized in section 1116 and 1117 of the statute. The amount reserved rises to four percent beginning in 2004. Section 1004 authorizes an SEA to reserve up to the greater of one percent or $400,000 from funds it receives under Title I, part A, part C (Migrant Education program) and part D (State Agency Neglected or Delinquent program) for State administration. Section 1117(c)(2)(A) further authorizes the SEA to reserve up to five percent of the Title I, part A amount received in excess of the prior-year amount for the State academic awards program.

Current Regulations: The current regulations (contained in 34 CFR 200.60 through 200.65) outline procedures for how a State reserves funds for State administration and school improvement activities, provides guidance to an SEA on the use of funds reserved for State administration, and defines certain terms that apply to all programs covered by the regulations.

Proposed Regulations: Proposed § 200.100 would clarify new procedures an SEA must follow when reserving funds for school improvement, State administration, and the State academic achievement awards program. When reserving funds for these activities, the SEA must first reserve funds for school improvement activities authorized under sections 1116 and 1117 of the Title I statute. In reserving funds for school improvement, an SEA may not reduce the sum of the Title I, part A allocations each LEA would receive below the total amount the LEA received in the preceding year. After reserving funds for school improvement, an SEA may then reserve funds for State administration and the State academic achievement awards program. In reducing LEA allocations, the SEA has the flexibility of (1) ensuring that no LEA receives, in total, less than 85, 90, or 95 percent, as applicable, of the amount it received in the preceding year (depending on its percentage of formula children) or (2) reducing each LEA at the same rate even if that results in an LEA receiving less than its hold-harmless amount.

In addition, proposed §§ 200.100 and 200.103 would (1) address the use of funds reserved for State administration and (2) provide certain definitions that apply to all of the programs governed by the proposed regulations.

Reasons: The provisions in proposed § 200.100 work in combination with the requirements outlined in proposed §§ 200.70 through 200.75 for allocating Title I, part A funds to an LEA by establishing the procedures that an SEA follows when reserving funds for school improvement, State administration, and the State academic achievement awards program. The key issue in proposed § 200.100 is whether the Department should give an SEA the flexibility to reduce an LEA below its hold-harmless amount when reserving funds for State administration and the State academic awards program so that all LEAs would contribute proportionately to these activities.

In the past, an SEA has always followed Title I's hold-harmless provisions when reserving funds for State administration, provided there was enough money available to honor the hold-harmless requirement. However, in ensuring that no LEA receives less than its hold-harmless amount, any LEA that gained additional funds under the Title I formula had to give up all or part of its gain in order to bring any LEA falling below its hold-harmless amount up to that level. As a result, any LEA that gained funds under the formula contributed a disproportionately larger share of its Title I allocations to support these Statewide activities, while an LEA funded at its hold-harmless level contributed nothing.

In order to provide more equity in how each LEA contributes to the reserve for State administration and the State academic achievement award program, the language in proposed § 200.100(d) would give a State the option of proportionately reducing each LEA's total Title I allocation even if the outcome results in some LEAs receiving less than their hold-harmless amounts. If the SEA adopts this option, every LEA would contribute an equal proportion of its Title I allocation to these Statewide activities.

The language in proposed § 200.103 is the same as in the current regulations and would define certain terms that are used throughout the proposed regulations.

Executive Order 12866

1. Potential Costs and Benefits

The proposed costs have been reviewed in accordance with Executive Order 12866. Under the terms of the Order, the Department has assessed the costs and benefits of this regulatory action.

In assessing the potential costs and benefits—both quantitative and qualitative—of these proposed regulations, the Department has determined that the benefits of the proposed regulations justify the costs. The Department has also determined that this regulatory action does not unduly interfere with State, local, and tribal governments in the exercise of their governmental functions.

To assist the Department in complying with the requirements of Executive Order 12866, the Secretary invites comment on whether there may be further opportunities to reduce any potential costs or increase potential benefits resulting from these proposed regulations without impeding the effective and efficient administration of the programs.

Summary of Benefits and Costs

As noted elsewhere, most of the regulations the Secretary proposes to

issue through this notice would add clarity where the statute is ambiguous or unclear or would reorganize statutory provisions to facilitate a better understanding of their requirements. The proposed regulations would not add significantly to the costs of implementing the programs authorized by ESEA Title I or alter the benefits that the Secretary believes will be obtained through successful implementation. The vast majority of the implementation costs and benefits will stem from the underlying legislation.

The programs authorized by Title I of the Elementary and Secondary Education Act, as reauthorized by the No Child Left Behind Act of 2001, have as their goal the education of all students, including students who are economically disadvantaged, limited English proficient, disabled, migrant, residing in institutions for neglected or delinquent youth and adults, or members of other groups typically considered ''at risk,'' so that they can achieve to challenging content and academic achievement standards. Thus, the benefits that will be obtained through the reauthorized Title I and its implementing regulations are those primarily of a more educated society. National data sets and studies by prominent researchers have demonstrated repeatedly that better education has major benefits, both economic and non-economic, not only for the individuals who receive it but for society as a whole. Nations that invest in quality education enjoy higher levels of growth and productivity, and a high-quality education system is an indispensable element of a strong economy and successful civil society.

Data from the 1999 Current Population Survey, conducted by the Census Bureau, indicate that adults with a high school diploma (but no further education) had a median income of $23,061, compared to $17,015 for those with no diploma and $15,098 for those with less than 9 years of education. High school graduates are more likely to continue their education and receive the additional skills and knowledge necessary to compete for jobs in a high-technology, knowledge-driven economy. Scholars have also found strong, positive correlations between higher levels of schooling and higher lifetime earnings, higher savings rates, and reduced costs of job search.

Researchers have, in addition, found that more and better education correlates with other outcomes that, while not directly related to employment and earnings, have a major, positive benefit on society. More educated individuals lead healthier lives and have lower mortality rates. They are more likely to donate time and money to charity, and to vote in elections. Researchers have demonstrated the intergenerational impact of education, as the educational level of parents is a positive predictor of children's health, cognitive development, education, occupational status, and future earnings. In addition, education is negatively correlated with criminal activity and incarceration, and more educated mothers are less likely to have daughters who give birth out of wedlock as teens.

The reauthorized Title I programs, and the regulations that the Department is proposing for those programs, will also lead to improvements in the qualifications of teachers, both in programs supported by Title I and in schools generally. The Department believes that the new teacher qualifications provisions will also convey major benefits on students and on society generally. Research has found that the academic success of children is more dependent on teacher quality than on any other variable, with the exception of family background; it is, in other words, the most important school-related determinant of achievement.

The major costs to States and to LEAs imposed by the statute and the proposed regulations are the costs of administering the Title I programs: at the State level, distributing funds to LEAs, monitoring LEA activities, providing technical assistance, and carrying out other activities specified in the statute, and, at the local level, administering programs in schools and classrooms, providing professional development to teachers and other staff, and ensuring program accountability, among other things. The Department believes that these activities will be financed through the appropriations for Title I and other Federal programs and that the responsibilities encompassed in the law and regulations will not impose a financial burden that States and LEAs will have to meet from non-Federal resources. For purposes of the Unfunded Mandates Reform Act of 1995, this rule does not include a Federal mandate that might result in increased expenditures by State, local, and tribal governments, or increased expenditures by the private sector of more than $100 million in any one year.

2. Clarity of the Regulations

Executive Order 12866 and the Presidential Memorandum on ''Plain Language in Government Writing'' require each agency to write regulations that are easy to understand.

The Secretary invites comments on how to make these proposed regulations easier to understand, including answers to questions such as the following:

- Are the requirements in the proposed regulations clearly stated?
- Do the proposed regulations contain technical terms or other wording that interferes with their clarity?
- Does the format of the proposed regulations (grouping and order of sections, use of headings, paragraphing, etc.) aid or reduce their clarity?
- Would the proposed regulations be easier to understand if we divided them into more (but shorter) sections? (A ''section'' is preceded by the symbol ''§ '' and a numbered heading; for example, *§ 200.12 Single State accountability system*.)
- Could the description of the proposed regulations in the ''Supplementary Information'' section of this preamble be more helpful in making the proposed regulations easy to understand? If so, how?
- What else could we do to make the proposed regulations easier to understand?

Send any comments that concern how the Department could make these proposed regulations easier to understand to the person listed in the **ADDRESSES** section of the preamble.

Initial Regulatory Flexibility Analysis

This Initial Regulatory Flexibility Analysis (IRFA) has been prepared in accordance with the Regulatory Flexibility Act. It involves proposed rules under Title I of the Elementary and Secondary Education Act, as amended by the NCLB Act. Its provisions require LEAs, without regard to size, to take certain actions to improve student academic achievement.

1. Reasons for, and Objectives of, Proposed Rules

The purpose of the proposed rules is to implement recent changes to Title I of the ESEA made by the NCLB Act.

2. Legal Basis

We are proposing the rules under the authority in section 1901(a) of Title I.

3. Small Entities Subject to the Proposed Rules

The small entities that would be affected by these proposed regulations are small LEAs receiving Federal funds under Title I programs.

4. Reporting, Recordkeeping and Other Compliance Requirements

Among other requirements, LEAs must: (1) Publicize and disseminate the results of its annual progress review, (2)

notify parents and teachers of any school identified for improvement or subject to corrective action or restructuring, (3) publicize and disseminate information regarding any action taken by the school and LEA to address the problems that led to the identification, and (4) for schools subject to restructuring, prepare a plan to carry out alternative governance arrangements. An LEA also must maintain in its records, and provide to the SEA, a written affirmation, signed by officials of each private school with participating children or appropriate private school representatives, that the required consultation has occurred.

5. Duplicative, Overlapping or Conflicting Federal Rules

We believe that there are no rules that duplicate, overlap or conflict with the proposed rules.

6. Agency Action to Minimize Effect on Small Entities

The Regulatory Flexibility Act directs us to consider significant alternatives that would accomplish the stated objectives, while minimizing any significant adverse impact on small entities. We believe there are no regulatory alternatives as the portions of these regulations that would affect small entities restate statutory requirements. Moreover, activities required under these proposed regulations would be financed through the appropriations for Title I programs, and the responsibilities encompassed in the law and regulations would not impose a financial burden that small entities would have to meet from non-Federal resources.

7. Request for Comments

Little data are available that would permit a separate analysis of how the proposed changes affect small entities in particular. Therefore, the Secretary specifically invites comments on the differential effects of the proposed regulations on small entities, and whether there may be further opportunities to reduce any potential adverse impact or increase potential benefits resulting from these proposed regulations without impeding the effective and efficient administration of Title I programs. Commenters are requested to describe the nature of any effect and provide empirical data and other factual support for their views to the extent possible. These comments will be considered in the preparation of the final regulations and the accompanying Final Regulatory Flexibility Analysis, and will be placed in the public comment file.

Federalism

Executive Order 13132 requires us to ensure meaningful and timely input by State and local elected officials in the development of regulatory policies that have federalism implications.

''Federalism implications'' means substantial direct effects on the States, on the relationship between the National Government and the States, or on the distribution of power and responsibilities among the various levels of government. Although we do not believe these proposed requirements would have federalism implications as defined in Executive Order 13132, we encourage State and local elected officials to review them and to provide comments.

Paperwork Reduction Act of 1995

Title I, part A of the Elementary and Secondary Education, as amended by the No Child Left Behind Act, contains several provisions that require State educational agencies (SEAs), Local educational agencies (LEAs), or schools to collect or disseminate information. They are: Sections 200.26, 200.27, 200.28, 200.30, 200.31, 200.34, 200.36, 200.36, 200.37, 200.38, 200.39, 200.41, 200.42, 200.43, 200.45, 200.46, 200.47, 200.49, 200.50, 200.51, 200.52, 200.57, and 200.62. Sections 200.12, 200.13, and 200.33 are covered under OMB control number 1810–0576. Section 200.53 is covered under OMB control number 1810–0516. Sections 200.70 through 200.75 are covered under OMB control numbers 1810–0620 and 1810–0622. Section 200.91 is covered under OMB control number 1810–0060.

SEAs must: (1) Provide annual notice to potential supplemental service providers of the opportunity to provide such services, and (2) maintain an updated list of approved providers from which parents may select, and (3) publicly report on standards and techniques for monitoring the quality and effectiveness of the services offered by each approved provider and for withdrawing approval from a provider that fails, for two consecutive years, to contribute to increasing the academic proficiency of students receiving supplemental services. As part of their responsibility to annually review the progress of each LEA to determine whether schools are making adequate yearly progress, SEAs must: (1) Provide, before the beginning of the next school year, the results of academic assessments administered as part of the State assessment system in a given school year to LEAs, (2) publicize and disseminate the results of the State review, (3) notify parents when LEAs are identified for improvement or corrective action, including providing information on the corrective action, and (4) notify the Secretary of Education of major factors that have significantly affected student academic achievement in schools identified for improvement. Additionally, under Title I, part D, States must submit a count of children and youth under the age of 21 enrolled in a regular program of instruction operated or supported by State agencies in institutions or community day programs for neglected children and youth and adult correctional institutions.

As part of their responsibility to annually review the progress of schools to determine whether they are making adequate yearly progress, each LEA must (1) publicize and disseminate the results of its annual progress review, (2) notify parents and teachers of any school identified for improvement or subject to corrective action or restructuring, (3) publicize and disseminate information regarding any action taken by the school and LEA to address the problems that lead to the identification, and (4) for schools subject to restructuring, prepare a plan to carry out alternative governance arrangements. LEAs also must maintain in their records, and provide to the SEA, written affirmation signed by officials of each private school with participating children, or appropriate private school representatives, that the required consultation has occurred.

At the school level, an eligible school choosing to operate a schoolwide program must develop a comprehensive schoolwide plan and maintain records demonstrating that it addresses the intents and purpose of each Federal program included.

The total estimated burden hours for SEA activities covered by the paperwork requirements is 55,952 across 52 SEAs. The total estimated burden hours for LEA activities covered by the paperwork requirements is 959,480 hours across 13,335 LEAs. The total estimated burden hours for school-level activities is 1,410,976 hours. Almost all the burden hours at the LEA and school level result from statutory requirements that require: (1) LEAs to prepare restructuring plans for schools that do not make adequate yearly progress after one full year in corrective action, and (2) schools seeking to operate schoolwide programs to develop schoolwide program plans. The actual impact on an individual LEA or school will vary depending on whether the LEA or school is subject to these specific requirements.

§ 200.83 outlines an SEA's responsibility to implement its State Title I, part C (Migrant Education) program through a comprehensive needs assessment and a comprehensive State plan for service delivery. § 200.84 outlines an SEA's responsibility for evaluating the effectiveness of its Title I, part C (Migrant Education) program. The yearly estimated public reporting burden for the collection of information to implement these two proposed regulatory requirements is 19,405 hours.

The Office of Management and Budget is currently reviewing the information collections pertaining to this regulation. We invite comments on the paperwork sections of this proposed regulation by September 5, 2002. If you want to comment on the information collection requirements, please send your comments to Jacquelyn C. Jackson at the address listed under **ADDRESSES.**

Electronic Access to This Document

You may view this document, as well as all other Department of Education documents published in the **Federal Register**, in text or Adobe Portable Document Format (PDF) on the Internet at the following site: *www.ed.gov/legislation/FedRegister.*

To use PDF you must have Adobe Acrobat Reader, which is available free at this site. If you have questions about using PDF, call the U.S. Government Printing Office (GPO), toll free, at 1–888–293–6498; or in the Washington, DC, area at (202) 512–1530.

Note: The official version of this document is the document published in the **Federal Register**. Free Internet access to the official edition of the **Federal Register** and the Code of Federal Regulations is available on GPO Access at:*http://www.access.gpo.gov/nara/index.html.*

(Catalog of Federal Domestic Assistance Numbers: 84.010 Improving Programs Operated by Local Educational Agencies)

List of Subjects in 34 CFR Part 200

Administrative practice and procedure, Adult education, Children, Coordination, Education, Education of disadvantaged children, Education of children with disabilities, Elementary and secondary education, Eligibility, Family, Family-centered education, Grant programs-education, Indians-education, Institutions of higher education, Interstate coordination, Intrastate coordination, Juvenile delinquency, Local educational agencies, Migratory children, Migratory workers, Neglected, Nonprofit private agencies, Private schools, Public agencies, Reporting and recordkeeping requirements, State-administered programs, State educational agencies, Subgrants.

Dated: July 30, 2002.

Rod Paige,

Secretary of Education.

The Secretary proposes to amend part 200 of title 34 of the Code of Federal Regulations as follows:

PART 200—TITLE I—IMPROVING THE ACADEMIC ACHIEVEMENT OF THE DISADVANTAGED

1. The authority citation for part 200 is revised to read as follows:

Authority: 20 U.S.C. 6301 through 6578, unless otherwise noted.

Subpart A—Improving Basic Programs Operated by Local Educational Agencies

2. Add a new undesignated center heading to subpart A of part 200 and place it after § 200.10 (as revised in a final rule published in the **Federal Register** on July 5, 2002 (67 FR 45038)) to read as follows:

Participation in NAEP

2a. In subpart A to part 200, remove the undesignated center headings ''Schoolwide Programs'', ''Participation of Eligible Children in Private Schools'', ''Capital Expenses'', Procedures for the Within-State Allocation of LEA Program Funds'', and ''Procedures for the Within-District Allocation of LEA Program Funds''.

3. Revise § 200.11 and place it under the new undesignated center heading ''Participation in NAEP'' in subpart A of part 200 to read as follows:

§ 200.11 Participation in NAEP.

(a) *State participation.* Beginning in the 2002–2003 school year, each State that receives funds under subpart A of this part must participate in biennial State academic assessments of fourth and eighth grade reading and mathematics under the State National Assessment of Educational Progress (NAEP), if the Department pays the costs of administering those assessments.

(b) *Local participation.* In accordance with section 1112(b)(1)(F) of the Act, and notwithstanding section 441(d)(1) of the National Education Statistics Act, an LEA that receives funds under subpart A of this part, if selected, must participate in the State-NAEP assessments referred to in paragraph (a) of this section.

(Authority: 20 U.S.C. 6311(c)(2); 6312(b)(1)(F), 9010(d)(1))

4. Add a new undesignated center heading to subpart A of part 200 and place it after revised § 200.11 to read as follows:

State Accountability System

5. Revise § 200.12 and place it under the new undesignated center heading ''State Accountability System'' in subpart A of part 200 to read as follows:

§ 200.12 Single State accountability system.

(a)(1) Each State must demonstrate in its State plan that the State has developed and is implementing, beginning with the 2002–2003 school year, a single, statewide accountability system.

(2) The State's accountability system must be effective in ensuring that all public elementary and secondary schools and LEAs in the State make adequate yearly progress as defined in §§ 200.13 through 200.20.

(b)(1) Except as provided in paragraph (b)(2) of this section, each State must use the same accountability system for all public elementary and secondary schools and all LEAs in the State.

(2) The State may, but is not required to, subject schools and LEAs not participating under subpart A of this part to the requirements of section 1116 of the Act.

(c) The State's accountability system must—

(1) Be based on the State's academic standards under § 200.1, academic assessments under § 200.2, and other academic indicators under § 200.19;

(2) Take into account the achievement of all public elementary and secondary school students;

(3) Include sanctions and rewards that the State will use to hold public elementary and secondary schools and LEAs accountable for student achievement and for making adequate yearly progress;

(4) Establish guidelines to ensure that alternate assessments are used only when appropriate for students with disabilities who have the most significant cognitive disabilities; and

(5) Require schools and LEAs to report the percentage of students taking an alternate assessment.

(Authority: 20 U.S.C. 6311(b)(2)(A))

6. Add a new undesignated center heading to subpart A of part 200 and place it after revised § 200.12 to read as follows:

Adequate Yearly Progress

7. Revise § 200.13 and place it under the new undesignated center heading ''Adequate Yearly Progress'' in subpart A of part 200 to read as follows:

§ 200.13 Adequate yearly progress in general.

(a) Each State must demonstrate in its State plan what constitutes adequate yearly progress of the State and of all public schools and LEAs in the State—

(1) Toward enabling all public school students to meet the State's student academic achievement standards; while

(2) Working toward the goal of narrowing the achievement gaps in the State, its LEAs, and its schools.

(b) A State must define adequate yearly progress, in accordance with §§ 200.14 through 200.20, in a manner that—

(1) Except as provided in paragraph (c) of this paragraph, applies the same high standards of academic achievement to all public school students in the State;

(2) Is statistically valid and reliable;

(3) Results in continuous and substantial academic improvement for all students;

(4) Measures the progress of all public schools, LEAs, and the State—

(i) Based primarily on the State's academic assessment system under § 200.2; or

(ii) Consistent with paragraph (d) of this section;

(5) Measures progress separately for reading/language arts and for mathematics;

(6) Is the same for all public schools and LEAs in the State; and

(7) Consistent with § 200.7, applies the same intermediate goals, annual measurable objectives, and other academic indicators under §§ 200.17 through 200.19 to each of the following:

(i) All public school students.

(ii) Students in each of the following subgroups:

(A) Economically disadvantaged students.

(B) Students from major racial and ethnic groups.

(C) Students with disabilities, as defined in section 9101(5) of the Act.

(D) Students with limited English proficiency, as defined in section 9101(25) of the Act.

(c)(1) For students with the most significant cognitive disabilities who take an alternate assessment, a State may, through a documented and validated standards-setting process, define achievement standards that—

(i) Are aligned with the State's academic content standards; and

(ii) Reflect professional judgment of the highest learning standards possible for those students.

(2)(i) In calculating adequate yearly progress for schools, a State may permit the use of the achievement standards in paragraph (c)(1) of this section, provided that schools in the aggregate do not exceed the State and LEA limitations in paragraph (c)(2)(ii) of this section.

(ii) In calculating adequate yearly progress for States and LEAs, a State may not permit the use of the achievement standards in paragraph (c)(1) of this section for more than 0.5 percent of all students in the grades assessed.

(iii) For purposes of calculating adequate yearly progress for States and LEAs, the State must require that grade-level academic content and achievement standards established under § 200.1 apply to any students taking alternate assessments that exceed the number established under paragraph(c)(2)(ii) of this section.

(d)(1) The State must establish a way to hold accountable schools—

(i) In which no grade level is assessed under the State's academic assessment system; or

(ii) Whose purpose is to serve students for less than a full academic year.

(2) The State is not required to administer a formal assessment to meet the requirement in paragraph (d)(1) of this section.

(Authority: 20 U.S.C. 6311(b)(2))

8. Add § 200.14 and place it under the new undesignated center heading ''Adequate Yearly Progress'' in subpart A of part 200 to read as follows:

§ 200.14 Components of adequate yearly progress.

A State's definition of adequate yearly progress must include all of the following:

(a) A timeline in accordance with § 200.15.

(b) Starting points in accordance with § 200.16.

(c) Intermediate goals in accordance with § 200.17.

(d) Annual measurable objectives in accordance with § 200.18.

(e) Other academic indicators in accordance with § 200.19.

(Authority: 20 U.S.C. 6311(b)(2))

9. Revise §§ 200.15 through 200.17 and place them under the new undesignated center heading ''Adequate Yearly Progress'' in subpart A of part 200 to read as follows:

§ 200.15 Timeline.

(a) Each State must establish a timeline for making adequate yearly progress that ensures that, not later than the 2013–2014 school year, all students in each group described in § 200.13(b)(7) will meet or exceed the State's proficient level of academic achievement.

(b) Notwithstanding subsequent changes a State may make to its academic assessment system or its definition of adequate yearly progress under §§ 200.13 through 200.20, the State may not extend its timeline for all students to reach proficiency beyond the 2013–2014 school year.

(Authority: 20 U.S.C. 6311(b)(2))

§ 200.16 Starting points.

(a) Using data for the 2001–2002 school year, each State must establish starting points in reading/language arts and in mathematics for measuring the percentage of students meeting or exceeding the State's proficient level of academic achievement.

(b) Each starting point must be based, at a minimum, on the higher of the following percentages of students at the proficient level:

(1) The percentage in the State of proficient students in the lowest-achieving subgroup of students under § 200.13(b)(7)(ii).

(2) The percentage of proficient students in the school in which is enrolled the student at the 20th percentile of the State's total enrollment. The State must determine this percentage as follows:

(i) Rank each school in the State according to the percentage of proficient students in the school.

(ii) Determine 20 percent of the total enrollment in all schools in the State.

(iii) Beginning with the lowest-ranked school, add the number of students enrolled in each school until reaching the school that represents 20 percent of the total enrollment in all schools.

(iv) Identify the percent of proficient students in the school identified in paragraph (iii).

(c)(1) Except as permitted under paragraph (c)(2) of this section, each starting point must be the same throughout the State for each school, each LEA, and each group of students under § 200.13(b)(7).

(2) A State may use the procedures under paragraph (b) of this section to establish separate starting points by grade span.

(Authority: 20 U.S.C. 6311(b)(2))

§ 200.17 Intermediate goals.

Each State must establish intermediate goals that increase in equal increments over the period covered by the timeline under § 200.15 as follows:

(a) The first incremental increase must take effect not later than the 2004–2005 school year.

(b) Each following incremental increase must occur within three years.

(Authority: 20 U.S.C. 6311(b)(2))

10. Add §§ 200.18 and 200.19 and place them under the new undesignated center heading ''Adequate Yearly Progress'' in subpart A of part 200 to read as follows:

§ 200.18 Annual measurable objectives.

(a) Each State must establish annual measurable objectives that—

(1) Identify for each year a minimum percentage of students that must meet or exceed the proficient level of academic achievement on the State's academic assessments; and

(2) Ensure that all students meet or exceed the State's proficient level of academic achievement within the timeline under § 200.15.

(b) The State's annual measurable objectives—

(1) Must be the same throughout the State for each school, each LEA, and each group of students under § 200.13(b)(7); and

(2) May be the same for more than one year, consistent with the State's intermediate goals under § 200.17.

(Authority: 20 U.S.C. 6311(b)(2))

§ 200.19 Other academic indicators.

(a) Each State must include in its definition of adequate yearly progress—

(1) The graduation rate for public high schools, which means—

(i) The percentage of students who graduate from high school with a regular diploma (not including a GED) in the standard number of years; or

(ii) Another definition, developed by the State and approved by the Secretary in the State plan, that more accurately measures the high school graduation rate; and

(2) At least one academic indicator for public elementary schools and at least one academic indicator for public middle schools, such as those under paragraph (b) of this section.

(b) The State may include additional academic indicators determined by the State, including, but not limited to, the following:

(1) Additional State or locally administered assessments not included in the State assessment system under § 200.2.

(2) Grade-to-grade retention rates.

(3) Attendance rates.

(4) Percentages of students completing gifted and talented, advanced placement, and college preparatory courses.

(c) The State may, but is not required to, increase the goals of its other academic indicators over the course of the timeline under § 200.15.

(d) In carrying out paragraphs (a) and (b) of this section, a State must ensure that the indicators are—

(1) Valid and reliable;

(2) Consistent with relevant, nationally recognized professional and technical standards, if any; and

(3) Consistent throughout the State within each grade span.

(e) Except as provided in § 200.20(b)(2), a State—

(1) May not use the indicators in paragraphs (a) and (b) of this section to reduce the number, or change the identity, of schools that would otherwise be subject to school improvement, corrective action, or restructuring if those indicators were not used; but

(2) May use the indicators to identify additional schools for school improvement, corrective action, or restructuring.

(Authority: 20 U.S.C. 6311(b)(2))

11. Revise §§ 200.20 and 200.21 and place them under the new undesignated center heading ''Adequate Yearly Progress'' in subpart A of part 200 to read as follows:

§ 200.20 Making adequate yearly progress.

A school or LEA makes adequate yearly progress if it complies with paragraph (c) and with either paragraph (a) or (b) of this section separately in reading/language arts and in mathematics.

(a) A school or LEA makes adequate yearly progress if each group of students under § 200.13(b)(7) meets or exceeds the State's—

(1) Annual measurable objectives under § 200.18; and

(2) Other academic indicators consistent with § 200.19(e).

(b) If students in any group under § 200.13(b)(7) in a school or LEA do not meet the State's annual measurable objectives under § 200.18, the school or LEA makes adequate yearly progress if—

(1) The percentage of students in that group below the State's proficient achievement level decreased by at least 10 percent from the preceding year; and

(2) That group made progress on one or more of the State's academic indicators under § 200.19 or the LEA's academic indicators under § 200.70(a)(2)(ii).

(c)(1) A school or LEA makes adequate yearly progress if, consistent with paragraph (e) of this section—

(i) Not less than 95 percent of the students enrolled in each group under § 200.13(b)(7) take the State assessments under § 200.2; and

(ii) The group is of sufficient size to produce statistically reliable results under § 200.7(a).

(2) If a group under § 200.13(b)(7) is not of sufficient size to produce statistically reliable results under paragraph (c)(1)(ii) of this section, the State must still include students in that group in its State assessments under § 200.2.

(d) For the purpose of determining whether a school or LEA has made adequate yearly progress, a State may establish a uniform procedure for averaging data that includes one or more of the following:

(1) *Averaging data across school years.* (i) A State may average data from the school year for which the determination is made with data from one or two school years immediately preceding that school year.

(ii) If a State averages data across school years, the State—

(A) May not delay—

(*1*) Implementing the assessments under § 200.5(a)(2) and (b);

(*2*) Determining adequate yearly progress under §§ 200.13 through 200.20 on the basis of assessments under § 200.5(a)(1);

(*3*) Reporting data resulting from the assessments under § 200.5(a)(2) and (b); or

(*4*) Implementing the requirements in section 1116 of the Act; but

(B) May delay determining adequate yearly progress on the basis of assessments under § 200.5(a)(2) until it has data from two or three years to average.

(2) *Combining data across grades.* Within each subject area, the State may combine data across grades in a school or LEA.

(e)(1) In determining the adequate yearly progress of an LEA, a State must include all students who were enrolled in schools in the LEA for a full academic year, as defined by the State.

(2) In determining the adequate yearly progress of a school, the State may not include students who were not enrolled in that school for a full academic year, as defined by the State.

(Authority: 20 U.S.C. 6311(b)(2), (b)(3)(C)(xi))

§ 200.21 Adequate yearly progress of a State.

For each State that receives funds under subpart A of this part and under subpart 1 of part A of Title III of the Act, the Secretary must, beginning with the 2004–2005 school year, annually review whether the State has—

(a) Made adequate yearly progress as defined in §§ 200.13 through 200.20 for each group of students in § 200.13(b)(7); and

(b) Met its annual measurable achievement objectives relating to the development and attainment of English proficiency by limited English

proficient students under section 3122(a) of the Act.

(Authority: 20 U.S.C. 7325)

12. Remove and reserve §§ 200.22 through 200.24 and place them under the new undesignated center heading ''Adequate Yearly Progress'' in subpart A of part 200.

12a. Add a new undesignated center heading following §200.24 to read as follows:

Schoolwide Programs

13. Revise § 200.25 and place it under the undesignated center heading ''Schoolwide Programs'' in subpart A of part 200 to read as follows:

§ 200.25 Schoolwide program purpose and eligibility.

(a) *Purpose.* (1) The purpose of a schoolwide program is to improve academic achievement throughout a school so that all students demonstrate proficiency related to the State's academic content and student academic achievement standards, particularly those students furthest away from demonstrating proficiency.

(2) The improved achievement is to result from improving the entire educational program of the school.

(b) *Eligibility.* (1) A school may operate a schoolwide program if—

(i) The school's LEA determines that the school serves an eligible attendance area or is a participating school under section 1113 of the Act; and

(ii) For the initial year of the schoolwide program—

(A) The school serves a school attendance area in which not less than 40 percent of the children are from low-income families; or

(B) Not less than 40 percent of the children enrolled in the school are from low-income families.

(2) In determining the percentage of children from low-income families under paragraph (b)(1)(ii) of this section, the LEA may use a measure of poverty that is different from the measure or measures of poverty used by the LEA to identify and rank school attendance areas for eligibility and participation under subpart A of this part.

(c) *Participating students and services.* A school operating a schoolwide program is not required to—

(1) Identify particular children under subpart A of this part as eligible to participate in a schoolwide program; or

(2) Provide services to those children that supplement the services they would receive, as otherwise required by section 1120A(b) of the Act.

(d) *Funding.* An eligible school may consolidate and use funds or services under subpart A of this part, together with other Federal, State, and local funds that the school receives, to operate a schoolwide program in accordance with §§ 200.25 through 200.28.

(Authority: 20 U.S.C. 6314)

14. Add a new § 200.26 and place it under the undesignated center heading ''Schoolwide Programs'' in subpart A of part 200 to read as follows:

§ 200.26 Development and evaluation of program plan.

(a) *Development of plan.* (1) A school must develop for its schoolwide program a comprehensive schoolwide program plan that describes how the school will improve academic achievement so that all students demonstrate proficiency on the State's academic content and student academic achievement standards, particularly those students furthest away from demonstrating proficiency.

(2) The school's process for developing its schoolwide plan must—

(i) Reflect an understanding of the school's academic strengths and needs related to the State's academic content and student academic achievement standards;

(ii) Focus on scientifically based research that reflects best practices for improving student academic achievement;

(iii) Involve the individuals who will have responsibility for implementing the schoolwide program plan in accordance with paragraph (d)(2) of this section;

(3) Reflect a process that occurs over time; and

(4) Provide for regular evaluation of the program's effectiveness related to the State's academic content and student academic achievement standards.

(b) *Comprehensive needs assessment.* An eligible school that desires to operate a schoolwide program must first conduct a comprehensive needs assessment of the entire school that—

(1) Takes into account the needs of migratory children as defined in section 1309(2) of the Act;

(2) Is developed with the participation of individuals who will carry out the comprehensive schoolwide program plan as that plan is described in paragraph (c) of this section;

(3) Is based on information about all students in the school, including all the demographic groups of students listed in section 1111(b)(2)(C) of the Act in relation to the State academic standards described in § 200.1;

(4) Reflects current achievement data that will help the school understand the subjects and skills in which teaching and learning need to be improved; and

(5) Reflects data that will identify—

(i) Students and groups of students who are not yet achieving to the State academic content standards and the State student academic achievement standards; and

(ii) The specific academic needs of those students that are to be addressed in the schoolwide program plan.

(c) *Comprehensive schoolwide program plan.* (1) After conducting the comprehensive needs assessment described in paragraph (b) of this section, the school must develop a comprehensive plan for assisting all students to achieve proficiency in relation to the State's academic content and student academic achievement standards.

(2) The school must develop the comprehensive plan in consultation with the LEA and its school support team or other technical assistance provider under section 1117 of the Act.

(3) The comprehensive plan must—

(i) Describe how the school will carry out the implementation components described in § 200.27;

(ii) Describe how the school will use resources under this part and from other sources to carry out the implementation components described in § 200.27; and

(iii) Include a list of SEA and LEA programs and other Federal programs under § 200.28 that the school will consolidate in the schoolwide program.

(d) *Schoolwide program planning process.* (1) The school must develop the comprehensive schoolwide program plan, including the comprehensive needs assessment over a one-year period unless—

(i) The LEA, after considering the recommendations of its technical assistance providers under section 1117 of the Act, determines that less time is needed to develop and implement the schoolwide program; or

(ii) The school is operating a schoolwide program on or before January 7, 2002, in which case the school may continue to operate its program, but must amend its existing plan to reflect the provisions of §§ 200.25 through 200.28 during the first year that it receives funds under subpart A of this part.

(2) The school must develop the comprehensive plan with the involvement of parents and other members of the community to be served and individuals who will carry out the plan, including—

(i) Teachers, principals, and administrators, including administrators of programs described in other parts of Title I of the Act;

(ii) If appropriate, pupil services personnel, technical assistance providers, and other school staff; and

(iii) If the plan relates to a secondary school, students from the school.

(3) If appropriate, the school must develop the comprehensive plan in coordination with other programs including those under Reading First, Early Reading First, Even Start, the Carl D. Perkins Vocational and Technical Education Act of 1998, and the Head Start Act.

(4) The comprehensive plan must remain in effect for the duration of the school's participation under §§ 200.25 through 200.28.

(5) The school must review and revise the plan as necessary to reflect changes in the schoolwide program or changes in State academic content standards and student academic achievement standards.

(e) *Evaluation.* The school must include in the comprehensive schoolwide program plan provisions to—

(1) Evaluate the implementation and results achieved by the schoolwide program using the State's annual assessment data, other State indicators of academic achievement, and other locally determined indicators of achievement;

(2) Determine whether the schoolwide program has been effective in increasing the extent to which students are meeting the State's academic content and student academic achievement standards, particularly those students who had been furthest from achieving those standards; and

(3) Amend the plan, as necessary, based on the results of this evaluation, to ensure continuous improvement of the schoolwide program.

(Authority: 20 U.S.C. 6314)

15. Revise §§ 200.27 and 200.28 and place them under the undesignated center heading ''Schoolwide Programs'' in subpart A of part 200 to read as follows:

§ 200.27 Schoolwide program implementation components.

The schoolwide program must include the following implementation components:

(a) *Schoolwide reform strategies.* The schoolwide program must incorporate reform strategies in the overall instructional program. Those strategies must—

(1) Address the needs of all children in the school, particularly the needs of students furthest away from demonstrating proficiency related to the State's academic content and student academic achievement standards; and

(2) Reflect effective methods and instructional practices that are based on scientifically based research, as defined in section 9101 of the Act, and that—

(i) Improve the teaching of reading/language arts, mathematics, and, at least by the 2005–2006 school year, science, consistent with the State's academic content and student academic achievement standards throughout the school;

(ii) Strengthen the core academic program; and

(iii) Increase the amount and quality of learning time.

(b) *Instruction by highly qualified teachers.* A schoolwide program must ensure instruction by highly qualified teachers and ongoing professional development by—

(1) Including strategies to ensure instruction in the schoolwide program by highly qualified teachers, as defined in § 200.56;

(2)(i) Providing high-quality and ongoing professional development in accordance with sections 1119 and 9101 of the Act for teachers, principals, paraprofessionals and, if appropriate, pupil services personnel, parents, and other staff; and

(ii) Aligning professional development with the State's academic content and student academic achievement standards;

(3) Devoting sufficient resources to carry out effectively the professional development activities described in paragraph (b)(2) of this section; and

(4) Including teachers in professional development activities regarding the use of academic assessments described in § 200.2 and, thus, to enable them to provide information on, and to improve, the achievement of individual students and the overall instructional program.

(c) *Parental involvement.* (1) A schoolwide program must involve parents in the planning, review, and improvement of the comprehensive schoolwide program plan.

(2) A schoolwide program must have a parental involvement policy that—

(i) Includes strategies to increase parental involvement in accordance with sections 1118 and 9101 of the Act, such as family literacy services;

(ii) Describes how the school will provide individual student academic assessment results, including an interpretation of those results, to the parents of students who participate in the academic assessments required by § 200.1;

(iii) Makes the comprehensive schoolwide program plan available to the LEA, parents, and the public; and

(iv) Provides the information contained in the comprehensive schoolwide program plan in an understandable and uniform format and, to the extent practicable, in a language that the parents can understand.

(d) *Additional support.* A schoolwide program must improve the entire educational program of a school, particularly with respect to those students who are furthest away from demonstrating proficiency in attaining the State's academic content and academic achievement standards. The schoolwide program must—

(1) Include activities to ensure that students who experience difficulty attaining the proficient or advanced levels of academic achievement standards required by § 200.1 will be provided with effective, timely additional support;

(2) Ensure that those students' difficulties are identified on a timely basis; and

(3) Provide sufficient information to teachers on which to base effective assistance to those students.

(e) *Transition.* A schoolwide program in an elementary school must include plans for assisting preschool students in the successful transition from early childhood programs, such as Head Start, Even Start, Early Reading First, or a preschool program under Individuals with Disabilities Act or a State-run preschool program, to the schoolwide program.

(Authority: 20 U.S.C. 6314)

§ 200.28 Use of funds in a schoolwide program.

(a) *Supplemental funds.* A school operating a schoolwide program must use funds available to carry out §§ 200.25 through 200.28 only to supplement funds that would, in the absence of funds under subpart A of this part, be made available from non-Federal sources for the school, including funds needed to provide services that are required by law for children with disabilities and children with limited English proficiency.

(b) *Prekindergarten Program.* A school that is eligible for a schoolwide program under § 200.1 may use funds made available under subpart A of this part to establish or enhance prekindergarten programs for children below the age of 6, such as Even Start programs or Early Reading First programs.

(c) *Availability of other Federal funds.* (1) In addition to funds under subpart A of this part, a school may use for its schoolwide program Federal funds of any program administered by the Secretary that is included in the most recent notice published for this purpose in the **Federal Register**.

(2) For the purposes of §§ 200.25 through 200.28, the authority of the school to consolidate funds from other Federal programs also applies to the consolidation of services provided to the school with those funds.

(3) If a school consolidates and uses funds from other programs in its schoolwide program, the school must meet the following requirements:

(i) *Migrant education.* Before the school chooses to consolidate in its schoolwide program funds received under part C of Title I of the Act, the school must—

(A) Use these funds first to meet the identified unique educational needs of migratory students that result from the effects of their migratory lifestyle, and to permit these students to participate effectively in school; and

(B) Document that these needs have been met.

(ii) *Indian education.* The school may consolidate funds received under subpart 1 of part A of Title VII of the Act if the parent committee established by the LEA under section 7114(c)(4) of the Act approves the inclusion of these funds.

(iii) *Special education.* (A) The school may consolidate funds received under part B of the Individuals with Disabilities Education Act (IDEA).

(B) However, the amount of funds consolidated may not exceed the amount received by the LEA under part B of IDEA for that fiscal year, divided by the number of children with disabilities in the jurisdiction of the LEA, and multiplied by the number of children with disabilities participating in the schoolwide program.

(C) The school may also consolidate funds received under section 8003(d) of the Act (Impact Aid) for children with disabilities in a schoolwide program.

(D) A school that consolidates funds under part B of IDEA or section 8003(d) of the Act may use those funds for any activities under its schoolwide program plan but must comply with all other requirements of part B of IDEA, to the same extent it would if it did not consolidate funds under part B of IDEA or section 8003(d) of the Act in the schoolwide program.

(4)(i) Except as provided in paragraph (c)(4)(ii) of this section, a school that consolidates and uses in a schoolwide program funds from different Federal programs administered by the Secretary—

(A) Is not required to meet the statutory or regulatory requirements of that program applicable at the school level;

(B) Is not required to maintain separate fiscal accounting records, by program, that identify the specific activities supported by those particular funds;

(C) Is required to maintain records that demonstrate that the schoolwide program, as a whole, addresses the intent and purposes of each of the Federal programs whose funds were consolidated to support the schoolwide program; and

(D) Is required to ensure that the needs of the intended beneficiaries of those other programs are addressed.

(ii) A school that chooses to use funds from other Federal programs must meet the requirements of those other programs relating to—

(A) Health;

(B) Safety;

(C) Civil rights;

(D) Student and parental participation and involvement;

(E) Services to private school children;

(F) Maintenance of effort;

(G) Comparability of services;

(H) Use of Federal funds to supplement, not supplant non-Federal funds in accordance with paragraph (a) of this section; and

(I) Distribution of funds to SEAs or LEAs.

(Authority: 20 U.S.C. 6314, 1413(a)(s)(D), 6396(b), 7703(d), 7815(c))

16. Place reserved § 200.29 under the undesignated center heading ''Schoolwide Programs'' in subpart A of part 200.

17. Add a new undesignated center heading to subpart A of part 200 and place it after reserved § 200.29 to read as follows:

LEA and School Improvement

18. Transfer §§200.30 through 200.69 to subpart A of part 200.

19. Revise § 200.30 and place it under the new undesignated center heading ''LEA and School Improvement'' in subpart A of part 200 to read as follows:

§ 200.30 Local review.

(a) Each LEA receiving funds under subpart A of this part must use the results of the State assessment system described in § 200.2 to review annually the progress of each school served under subpart A of this part to determine whether the school is making adequate yearly progress in accordance with § 200.20.

(b)(1) In reviewing the progress of an elementary or secondary school operating a targeted assistance program, an LEA may choose to review the progress of only the students in the school who are served, or are eligible for services, under subpart A of this part.

(2) The LEA may exercise the option under paragraph (b)(1) of this section so long as the students selected for services under the targeted assistance program are those with the greatest need for academic assistance, consistent with the requirements of section 1115 of the Act.

(c)(1) To determine whether schools served under subpart A of this part are making adequate yearly progress, an LEA also may use any additional academic assessments or any other academic indicators described in the LEA's plan.

(2) These indicators—

(i) May identify additional schools for school improvement or in need of corrective action or restructuring;

(ii) May permit a school to make adequate yearly progress if, in accordance with § 200.20(b), the school also reduces the percentage of a student group failing to meet the State's proficient level of academic achievement by at least 10 percent; and

(iii) With the exception described in paragraph (ii), may not be used to reduce the number of or change the schools that would otherwise be identified for school improvement, corrective action, or restructuring if the LEA did not use these additional indicators.

(d) The LEA must publicize and disseminate the results of its annual progress review to parents, teachers, principals, schools, and the community.

(e) The LEA must review the effectiveness of actions and activities that schools are carrying out under subpart A of this part with respect to parental involvement, professional development, and other activities assisted under subpart A of this part.

(Authority: 20 U.S.C. 6316(a) and (b))

20. Add new §§ 200.31 through 200.39 and place them under the new undesignated center heading ''LEA and School Improvement'' in subpart A of part 200 to read as follows:

§ 200.31 Opportunity to review school-level data.

(a) Before identifying a school for school improvement, corrective action, or restructuring, an LEA must provide the school with an opportunity to review the school-level data, including academic assessment data, on which the proposed identification is based.

(b)(1) If the principal of a school that an LEA proposes to identify for school improvement, corrective action, or restructuring believes, or a majority of the parents of the students enrolled in the school believe, that the proposed identification is in error for statistical or other substantive reasons, the principal

may provide supporting evidence to the LEA.

(2) The LEA must consider the evidence referred to in paragraph (b)(1) of this section before making a final determination.

(c) The LEA must make public a final determination of the status of the school with respect to identification not later than 30 days after it provides the school with the opportunity to review the data on which the proposed identification is based.

(Authority: 20 U.S.C. 6316(b)(2))

§ 200.32 Identification for school improvement.

(a)(1) An LEA must identify for school improvement any elementary or secondary school served under subpart A of this part that fails, for two consecutive years, to make adequate yearly progress as defined under §§ 200.13 through 200.20.

(2) The LEA must make the identification described in paragraph (a)(1) of this section before the beginning of the school year following the year in which the LEA administered the assessments that resulted in the school's failure to make adequate yearly progress for a second consecutive year.

(b)(1) An LEA must treat any school that was in the first year of school improvement status on January 7, 2002 as a school that is in the first year of school improvement under § 200.39 for the 2002–2003 school year.

(2) Not later than the first day of the 2002–2003 school year, the LEA must, in accordance with § 200.44, provide public school choice to all students in the school.

(c)(1) An LEA must treat any school that was identified for school improvement for two or more consecutive years on January 7, 2002 as a school that is in its second year of school improvement under § 200.39 for the 2002–2003 school year.

(2) Not later than the first day of the 2002–2003 school year, the LEA must—

(i) In accordance with § 200.44, provide public school choice to all students in the school; and

(ii) In accordance with § 200.45, make available supplemental educational services to eligible students who remain in the school.

(d) An LEA may remove from improvement status a school otherwise subject to the requirements of paragraphs (b) or (c) of this section if, on the basis of assessments the LEA administers during the 2001–2002 school year, the school makes adequate yearly progress for a second consecutive year.

(e) An LEA may, but is not required to, identify a school for improvement if, on the basis of assessments the LEA administers during the 2001–2002 school year, the school fails to make adequate yearly progress for a second consecutive year.

(f) If an LEA identifies a school for improvement after the beginning of the school year following the year in which the LEA administered the assessments that resulted in the school's failure to make adequate yearly progress for a second consecutive year—

(1) The school is subject to the requirements of school improvement under § 200.39 immediately upon identification, including the provision of public school choice; and

(2) The LEA must count that school year as a full school year for the purposes of subjecting the school to additional improvement measures if the school continues to fail to make adequate yearly progress.

(Authority: 20 U.S.C. 6316)

§ 200.33 Identification for corrective action.

(a) If a school served by an LEA under subpart A of this part fails to make adequate yearly progress by the end of the second full year after the LEA has identified the school for improvement under § 200.32, the LEA must identify the school for corrective action under § 200.42.

(b) If a school was subject to corrective action on January 7, 2002, the LEA must—

(1) Treat the school as a school identified for corrective action under § 200.42 for the 2002–2003 school year; and

(2) Not later than the first day of the 2002–2003 school year—

(i) In accordance with § 200.44, provide public school choice to all students in the school; and

(ii) In accordance with § 200.45, make available supplemental educational services to eligible students who remain in the school.

(c) An LEA may remove from corrective action a school otherwise subject to the requirements of paragraphs (a) or (b) of this section if, on the basis of assessments administered by the LEA during the 2001–2002 school year, the school makes adequate yearly progress for a second consecutive year.

(Authority: 20 U.S.C. 6316)

§ 200.34 Identification for restructuring.

(a) If a school continues to fail to make adequate yearly progress after one full school year of corrective action under § 200.42, the LEA must prepare a restructuring plan for the school and make arrangements to implement the plan.

(b) If the school continues to fail to make adequate yearly progress, the LEA must implement the restructuring plan no later than the beginning of the school year following the year in which the LEA developed the restructuring plan under paragraph (a) of this section.

(Authority: 20 U.S.C. 6316(b)(8))

§ 200.35 Delay and removal.

(a) An LEA may delay, for a period not to exceed one year, implementation of requirements under the second year of school improvement, under corrective action, or under restructuring if—

(1) The school makes adequate yearly progress for one year; or

(2) The school's failure to make adequate yearly progress is due to exceptional or uncontrollable circumstances, such as a natural disaster or a precipitous and unforeseen decline in the financial resources of the LEA or school.

(b)(1) The LEA may not take into account a period of delay under paragraph (a) of this section in determining the number of consecutive years of the school's failure to make adequate yearly progress.

(2) Except as provided in paragraph (c) of this section, the LEA must subject the school to further actions as if the delay never occurred.

(c) If any school identified for school improvement, corrective action, or restructuring makes adequate yearly progress for two consecutive school years, the LEA may not, for the succeeding school year—

(1) Subject the school to the requirements of school improvement, corrective action, or restructuring; or

(2) Identify the school for improvement.

(Authority: 20 U.S.C. 6316(b))

§ 200.36 Communication with parents.

(a) Throughout the school improvement process, the State, LEA, and school must communicate with the parents of each child attending the school.

(b) The State, LEA, and school must ensure that, regardless of the method or media used, it provides information to parents—

(1) In an understandable and uniform format, including alternative formats upon request; and

(2) To the extent practicable, in a language that parents can understand.

(c) The State, LEA, and school must provide information to parents—

(1) Directly, through such means as regular mail or, if possible, e-mail; and

(2) Through broader means of dissemination such as the Internet, the media, and public agencies serving the student population and their families.

(d) All communications must respect the privacy of students and their families.

(Authority: 20 U.S.C. 6316)

§ 200.37 Notice of identification for improvement, corrective action, or restructuring.

(a) If an LEA identifies a school for improvement or subjects the school to corrective action or restructuring, the LEA must promptly notify the parent or parents of each child enrolled in the school of this identification.

(b) The notice referred to in paragraph (a) of this section must include the following:

(1) An explanation of what the identification means, and how the school compares in terms of academic achievement to other elementary and secondary schools served by the LEA and the SEA involved.

(2) The reasons for the identification.

(3) An explanation of how parents can become involved in addressing the academic issues that led to identification.

(4)(i) An explanation of the parents' option to transfer their child to another public school, in accordance with § 200.44.

(ii) The explanation of the parents' option to transfer must include, at a minimum, information on the performance of the school or schools to which the child may transfer.

(iii) The explanation may include other information on the school or schools to which the child may transfer, such as—

(A) A description of any special academic programs or facilities;

(B) The availability of before– and after-school programs; and

(C) The professional qualifications of teachers in the core academic subjects.

(5)(i) If the school is in its second year of improvement or subject to corrective action or restructuring, a notice explaining how parents can obtain supplemental educational services for their child in accordance with § 200.45.

(ii) The annual notice of the availability of supplemental educational services must include, at a minimum, the following:

(A) The identity of approved providers of those services available within the LEA, including providers of technology-based or distance-learning supplemental educational services, or providers that make services reasonably available in neighboring LEAs.

(B) A brief description of the services, qualifications, and demonstrated effectiveness of the providers referred to in paragraph (b)(5)(ii)(A) of this section.

(Authority: 20 U.S.C. 6316)

§ 200.38 Information about action taken.

(a) An LEA must publish and disseminate to parents and the public information regarding any action taken by a school and the LEA to address the problems that led to the LEA's identification of the school for improvement, corrective action, or restructuring.

(b) The information referred to in paragraph (a) of this section must include the following:

(1) An explanation of what the school is doing to address the problem of low achievement.

(2) An explanation of what the LEA or SEA is doing to help the school address the problem of low achievement.

(3) If applicable, a description of specific corrective actions or restructuring plans, including opportunities for parental participation.

(Authority: 20 U.S.C. 6316(b))

§ 200.39 Responsibilities resulting from identification for school improvement.

(a) If an LEA identifies a school for school improvement under § 200.32—

(1) The LEA must—

(i) Not later than the first day of the school year following identification, with the exception described in § 200.32(f), provide all students enrolled in the school with the option to transfer, in accordance with § 200.44, to another public school served by the LEA; and

(ii) Ensure that the school receives technical assistance in accordance with § 200.40; and

(2) The school must develop or revise a school improvement plan in accordance with § 200.41.

(b) If a school fails to make adequate yearly progress by the end of the first full school year after the LEA has identified it for improvement under § 200.32, the LEA must—

(1) Continue to provide all students enrolled in the school with the option to transfer, in accordance with § 200.44, to another public school served by the LEA;

(2) Continue to ensure that the school receives technical assistance in accordance with § 200.40; and

(3) Make available supplemental educational services in accordance with § 200.45.

(Authority: 20 U.S.C. 6316(b))

21. Revise §§ 200.40 through 200.45 and place them under the new undesignated center heading ''LEA and School Improvement'' in subpart A of part 200 to read as follows:

§ 200.40 Technical assistance.

(a) An LEA that identifies a school for improvement under § 200.32 must ensure that the school receives technical assistance as the school develops and implements its improvement plan under § 200.41 and throughout the plan's duration.

(b) The LEA may arrange for the technical assistance to be provided by one or more of the following:

(1) The LEA through the statewide system of school support and recognition described under section 1117 of the Act.

(2) The SEA.

(3) An institution of higher education that is in full compliance with all the reporting provisions of Title II of the Higher Education Act of 1965.

(4) A private not-for-profit organization, a private for-profit organization, an educational service agency, or another entity with experience in helping schools improve academic achievement.

(c) The technical assistance must include the following:

(1) Assistance in analyzing data from the State assessment system, and other examples of student work, to—

(i) Identify and address problems in instruction and problems in implementing requirements for parental involvement and professional development under subpart A of this part; and

(ii) Identify the responsibilities of the school and LEA in developing solutions to these problems.

(2) Assistance in identifying and implementing professional development and instructional strategies and methods that have been proven effective, through scientifically based research, in addressing the specific instructional issues that caused the LEA to identify the school for improvement.

(3) Assistance in analyzing and revising the school's budget so that the school allocates its resources more effectively to the activities most likely to—

(i) Increase student academic achievement; and

(ii) Remove the school from school improvement status.

(Authority: 20 U.S.C. 6316(b)(4))

§ 200.41 School improvement plan.

(a)(1) Not later than three months after an LEA has identified a school for

improvement under § 200.32, the school must develop or revise a school improvement plan for approval by the LEA.

(2) The school must consult with parents, school staff, the LEA, and outside experts in developing or revising its school improvement plan.

(b) The school improvement plan must cover a 2-year period.

(c) The school improvement plan must—

(1) Specify the responsibilities of the school, the LEA, and the SEA serving the school under the plan, including the technical assistance to be provided by the LEA under § 200.40;

(2)(i) Incorporate strategies, drawn from scientifically based research, that will strengthen instruction in the core academic subjects at the school and address the specific academic issues that caused the LEA to identify the school for improvement; and

(ii) May include a strategy for implementating of a comprehensive school reform model described in section 1606 of the Act;

(3) With regard to the school's core academic subjects, adopt policies and practices most likely to ensure that all groups of students described in § 200.13(b)(7) and enrolled in the school will meet the State's proficient level of achievement, as measured by the State's assessment system, not later than the 2013–2014 school year;

(4) Establish measurable goals that—

(i) Address the specific reasons for the school's failure to make adequate progress; and

(ii) Promote, for each group of students described in § 200.13(b)(7) and enrolled in the school, continuous and substantial progress that ensures that all these groups meet the State's annual measurable objectives described in § 200.18;

(5) Provide an assurance that the school will spend not less than 10 percent of the allocation it received under subpart A of this part for each year that the school is in school improvement status, for the purpose of providing high-quality professional development to the school's teachers, principal, and, as appropriate, other instructional staff, consistent with section 9101(34) of the Act, that will contribute to removing the school from school improvement status and that—

(i) Directly addresses the academic achievement problem that caused the school to be identified for improvement; and

(ii) Is provided in a manner that affords increased opportunity for participating in that professional development;

(6) Incorporates a teacher mentoring program;

(7) Includes strategies to promote effective parental involvement at the school; and

(8) As appropriate, incorporates activities before school, after school, during the summer, and during any extension of the school year.

(d)(1) Within 45 days of receiving a school improvement plan, the LEA must—

(i) Establish a peer-review process to assist with review of the plan;

(ii) Promptly review the plan;

(iii) Work with the school to make any necessary revisions; and

(iv) Approve the plan if it meets the requirements of this section.

(2) The LEA may condition approval of the school improvement plan on—

(i) Inclusion of one or more of the corrective actions specified in § 200.42; or

(ii) Feedback on the plan from parents and community leaders.

(e) A school must implement its school improvement plan immediately on approval of the plan by the LEA.

(Authority: 20 U.S.C. 6316(b)(3))

§ 200.42 Corrective action.

(a) *Definition.* ''Corrective action'' means action by an LEA that—

(1) Substantially and directly responds to—

(i) The consistent academic failure of a school that led the LEA to identify the school for corrective action; and

(ii) Any underlying staffing, curriculum, or other problems in the school;

(2) Is designed to increase substantially the likelihood that each group of students described in § 200.13(b)(7) and enrolled in the school will meet or exceed the State's proficient levels of achievement as measured by the State assessment system; and

(3) Is consistent with State law.

(b) *Requirements.* If an LEA identifies a school for corrective action, in accordance with § 200.33, the LEA must do the following:

(1) Continue to provide all students enrolled in the school with the option to transfer to another public school in accordance with § 200.44.

(2) Continue to ensure that the school receives technical assistance consistent with the requirements of § 200.40.

(3) Make available supplemental educational services in accordance with § 200.45.

(4) Take at least one of the following corrective actions:

(i) Replace the school staff who are relevant to the school's failure to make adequate yearly progress.

(ii) Institute and fully implement a new curriculum, including the provision of appropriate professional development for all relevant staff, that—

(A) Is grounded in scientifically based research; and

(B) Offers substantial promise of improving educational achievement for low-achieving students and of enabling the school to make adequate yearly progress.

(iii) Significantly decrease management authority at the school level.

(iv) Appoint one or more outside experts to advise the school on—

(A) Revising the school improvement plan developed under § 200.41 to address the specific issues underlying the school's continued failure to make adequate yearly progress and resulting in identification for corrective action; and

(B) Implementing the revised improvement plan.

(v) Extend for that school the length of the school year or school day.

(vi) Restructure the internal organization of the school.

(Authority: 20 U.S.C. 6316(b)(7))

§ 200.43 Restructuring.

(a) *Definition.* ''Restructuring'' means a major reorganization of a school's governance arrangement by an LEA that—

(1) Makes fundamental reforms, such as significant changes in the school's staffing and governance, to improve student academic achievement in the school;

(2) Has substantial promise of enabling the school to make adequate yearly progress as defined under §§ 200.13 through 200.20; and

(3) Is consistent with State law.

(b) *Requirements.* If the LEA identifies a school for restructuring in accordance with § 200.34, the LEA must do the following:

(1) Continue to provide all students enrolled in the school with the option to transfer to another public school in accordance with § 200.44.

(2) Make available supplemental educational services in accordance with § 200.45.

(3) Prepare a plan to carry out one of the following alternative governance arrangements:

(i) Reopen the school as a public charter school.

(ii) Replace all or most of the school staff, which may include the principal, who are relevant to the school's failure to make adequate yearly progress.

(iii) Enter into a contract with an entity, such as a private management

company, with a demonstrated record of effectiveness, to operate the school as a public school.

(iv) Turn the operation of the school over to the SEA, if permitted under State law and agreed to by the State.

(v) Any other major restructuring of a school's governance arrangement consistent with this section.

(4) Provide to parents and teachers—

(i) Prompt notice that the LEA has identified the school for restructuring; and

(ii) An opportunity for parents and teachers to—

(A) Comment before the LEA takes any action under a restructuring plan; and

(B) Participate in the development of any restructuring plan.

(c) *Implementation.* If a school continues to fail to make adequate yearly progress, the LEA must implement the restructuring plan no later than the beginning of the school year following the year in which the LEA developed the restructuring plan under paragraph (b)(3) of this section.

(d) *Rural schools.* On request, the Secretary will provide technical assistance for developing and carrying out a restructuring plan to any rural LEA—

(1) That has fewer than 600 students in average daily attendance at all of its schools; and

(2) In which all of the schools have a School Locale Code of 7 or 8, as determined by the National Center for Education Statistics.

(Authority: 20 U.S.C. 6316(b)(8))

§ 200.44 Public school choice.

(a) *Requirements.* (1) In the case of a school identified for school improvement under § 200.32, for corrective action under § 200.33, or for restructuring under § 200.34, the LEA must provide all students enrolled in the school with the option to transfer to another public school served by the LEA.

(2) The LEA must offer this option not later than the first day of the school year following the year in which the LEA administered the assessments that resulted in its identification of the school for improvement, corrective action, or restructuring.

(3) The schools to which students may transfer under paragraph (a)(1) of this section—

(i) May not include schools that—

(A) The LEA has identified for improvement, corrective action, or restructuring; or

(B) Are persistently dangerous as determined by the State; and

(ii) May include one or more public charter schools.

(4) If more than one school meets the requirements of paragraph (a)(3) of this section, the LEA must—

(i) Provide to parents of students eligible to transfer under paragraph (a)(1) of this section a choice of more than one such school; and

(ii) Take into account the parents' preferences among the choices offered under paragraph (a)(4)(i) of this section.

(5) The LEA must offer the option to transfer described in this section unless it is prohibited by State law in accordance with paragraph (b) of this section.

(6) Except as described in §§ 200.32(d) and 200.33(c), if a school was in school improvement or subject to corrective action before January 8, 2002, the State must ensure that the LEA provides a public school choice option in accordance with paragraph (a)(1) of this section not later than the first day of the 2002–2003 school year.

(b) *Limitation on State law prohibition.* An LEA may invoke the State law prohibition on choice described in paragraph (a)(4) of this section only if the State law prohibits choice through restrictions on public school assignments or the transfer of students from one public school to another public school.

(c) *Desegregation plans.* (1) If an LEA is subject to a desegregation plan, whether that plan is voluntary, court-ordered, or required by a Federal or State administrative agency, the LEA is not exempt from the requirement in paragraph (a)(1) of this section.

(2) In determining how to provide students with the option to transfer to another school, the LEA may take into account the requirements of the desegregation plan.

(3) If the desegregation plan forbids the LEA from offering the transfer option required under paragraph (a)(1) of this section, the LEA must secure appropriate changes to the plan to permit compliance with paragraph (a)(1) of this section.

(d) *Priority.* (1) In providing students the option to transfer to another public school in accordance with paragraph (a)(1) of this section, the LEA must give priority to the lowest-achieving children from low-income families.

(2) The LEA must determine family income on the same basis that the LEA uses to make allocations to schools under subpart A of this part.

(e) *Status.* Any public school to which a student transfers under paragraph (a)(1) of this section must ensure that the student is enrolled in classes and other activities in the school in the same manner as all other students in the school.

(f) *Duration of transfer.* (1) If a student exercises the option under paragraph (a)(1) of this section to transfer to another public school, the LEA must permit the student to remain in that school until the student has completed the highest grade in the school.

(2) The LEA's obligation to provide transportation for the student may be limited under the circumstances described in paragraph (h) of this section and in § 200.48.

(g) *No eligible schools within an LEA.* If all public schools to which a student may transfer within an LEA are identified for school improvement, corrective action, or restructuring, the LEA—

(1) Must, to the extent practicable, establish a cooperative agreement for a transfer with one or more other LEAs in the area; and

(2) May offer supplemental educational services to eligible students under § 200.45 in schools in their first year of school improvement under § 200.39.

(h) *Transportation.* (1) If a student exercises the option under paragraph (a)(1) of this section to transfer to another public school, the LEA must, consistent with § 200.48, provide or pay for the student's transportation to the school.

(2) The LEA's obligation to provide transportation for the student ends at the end of the school year in which the school from which the student transferred is no longer identified by the LEA for school improvement, corrective action, or restructuring.

(i) *Students with disabilities and students covered under section 504 of the Rehabilitation Act of 1973 (Section 504).* For students with disabilities under the IDEA and students covered under Section 504, the public school choice option must provide a free appropriate public education as that term is defined in section 602(8) of the IDEA or 34 CFR 104.33, respectively.

(Authority: 20 U.S.C. 6316)

§ 200.45 Supplemental educational services.

(a) *Definition.* ''Supplemental educational services'' means tutoring and other supplemental academic enrichment services that are—

(1) In addition to instruction provided during the school day;

(2) Specifically designed to—

(i) Increase the academic achievement of eligible students as measured by the State's assessment system; and

(ii) Enable these children to attain proficiency in meeting State academic achievement standards; and

(3) Of high quality and research-based.

(b) *Requirement.* (1) If an LEA identifies a school for improvement under § 200.39(b), corrective action under § 200.33, or restructuring under § 200.34, the LEA must arrange, consistent with paragraph (d) of this section, for each eligible student in the school to receive supplemental educational services from a State-approved provider selected by the student's parents.

(2) Except as described in §§ 200.32(d) and 200.33(c), if the school was in school improvement status for two or more consecutive school years or subject to corrective action on January 7, 2002, the State must ensure that the LEA makes available, consistent with paragraph (d) of this section, supplemental educational services to all eligible students not later than the first day of the 2002–2003 school year.

(3) The LEA must, consistent with § 200.48, continue to make available supplemental educational services to eligible students until the end of the school year in which the LEA is making those services available.

(4)(i) At the request of an LEA, the SEA may waive, in whole or in part, the requirement that the LEA make available supplemental educational services if the SEA determines that—

(A) None of the providers of those services on the list approved by the SEA under § 200.47 makes those services available in the area served by the LEA or within a reasonable distance of that area; and

(B) The LEA provides evidence that it is not otherwise able to make those services available.

(ii) The SEA must notify the LEA, within 30 days of receiving the LEA's request for a waiver under paragraph (b)(4)(i) of this section, whether it approves or disapproves the request, and if it disapproves, the reasons for the disapproval, in writing.

(iii) An LEA that receives a waiver must renew its request for that waiver on an annual basis.

(c) *Eligibility.* (1) Only students from low-income families are eligible for supplemental educational services.

(2) The LEA must determine family income on the same basis that the LEA uses to make allocations to schools under subpart A of this part.

(d) *Priority.* If the amount of funds available for supplemental educational services is insufficient to provide services to each student whose parents request these services, the LEA must give priority to the lowest-achieving students.

(Authority: 20 U.S.C. 6316)

22. Add new §§ 200.46 through 200.49 and place them under the new undesignated center heading ''LEA and School Improvement'' in subpart A of part 200 to read as follows:

§ 200.46 LEA responsibilities for supplemental educational services.

(a) If an LEA is required to make available supplemental educational services under § 200.39(b)(3), § 200.42(b)(3), or § 200.43(b)(2), the LEA must do the following:

(1) Provide the notice to parents described in § 200.37(b)(5).

(2) If requested, assist parents in choosing a provider from the list of approved providers maintained by the SEA.

(3) Apply fair and equitable procedures for serving students if the number of spaces at approved providers is not sufficient to serve all eligible students whose parents request services.

(4) Ensure that eligible students with disabilities and students covered under Section 504 receive appropriate supplemental educational services and accommodations in the provision of those services.

(5) Not disclose to the public, without the written permission of the student's parents, the identity of any student who is eligible for, or receiving, supplemental educational services.

(b)(1) In addition to meeting the requirements in paragraph (a) of this section, the LEA must enter into an agreement with each provider selected by a parent or parents.

(2) The agreement must—

(i) Require the LEA to develop, in consultation with the parents and the provider—

(A) A statement of specific achievement goals for the student;

(B) A description of how the student's progress will be measured; and

(C) A timetable for improving achievement that, in the case of a student with disabilities under IDEA or a student covered under Section 504, is consistent with the student's individualized education program under section 614(d) of the IDEA or the student's individualized services under Section 504;

(ii) Describe procedures for regularly informing the student's parents and teachers of the student's progress;

(iii) Provide for the termination of the agreement if the provider is unable to meet the goals and timetables specified in the agreement;

(iv) Specify how the LEA will pay the provider; and

(v) Prohibit the provider from disclosing to the public, without the written permission of the student's parents, the identity of any student who is eligible for, or receiving, supplemental educational services.

(3) The LEA may not pay the provider for religious worship or instruction.

(c) If State law prohibits an SEA from carrying out one or more of its responsibilities under § 200.47 with respect to those who provide, or seek approval to provide, supplemental educational services, each LEA must carry out those responsibilities with respect to its students who are eligible for those services.

(Authority: 20 U.S.C. 6316(e))

§ 200.47 SEA responsibilities for supplemental educational services.

(a) If one or more LEAs in a State are required to make available supplemental educational services under § 200.39(b)(3), § 200.42(b)(3), or § 200.43(b)(2), the SEA for that State must do the following:

(1)(i) In consultation with affected LEAs, parents, teachers, and other interested members of the public, promote participation by as many providers as possible.

(ii) This promotion must include annual notice to potential providers of—

(A) The opportunity to provide supplemental educational services; and

(B) Procedures for obtaining the SEA's approval to be a provider of those services.

(2) Consistent with paragraph (b) of this section, develop and apply to potential providers objective criteria that are based on a demonstrated record of effectiveness in increasing the academic proficiency of students in subjects relevant to meeting the State academic content standards and the State student achievement standards described under § 200.1;

(3) Maintain by LEA an updated list of approved providers from which parents may select.

(4) Develop, implement, and publicly report on standards and techniques for—

(i) Monitoring the quality and effectiveness of the services offered by each approved provider; and

(ii) Withdrawing approval from a provider that fails, for two consecutive years, to contribute to increasing the academic proficiency of students receiving supplemental educational services from that provider.

(5) Ensure that eligible students with disabilities and students covered under Section 504 receive appropriate supplemental educational services and accommodations in the provision of those services.

(b) *Standards for approving providers.* (1) As used in this section and in

§ 200.46, ''provider'' means a non-profit entity, a for-profit entity, an LEA, a public school, including a public charter school, or a private school that——

(i) Has a demonstrated record of effectiveness in increasing student academic achievement;

(ii) Is capable of providing supplemental educational services that are consistent with the instructional program of the LEA and with the State academic content standards and State student achievement standards described under § 200.1;

(iii) Is financially sound; and

(iv) In the case of a public school, has not been identified under §§ 200.32, 200.33, or 200.34.

(2) In order for the SEA to include a provider on the State list, the provider must agree to—

(i)(A) Provide parents of each student receiving supplemental educational services and the responsible LEA with information on the progress of the student in increasing achievement.

(B) This information must be in an understandable and uniform format, including alternative formats upon request, and, to the extent practicable, in a language that the parents can understand;

(ii) Ensure that the instruction the provider gives and the content the provider uses—

(A) Are consistent with the instruction provided and the content used by the LEA and the SEA;

(B) Are aligned with State student academic achievement standards; and

(C) Are secular, neutral, and nonideological; and

(iii) Meet all applicable Federal, State, and local health, safety, and civil rights laws.

(3) A private provider may not, on the basis of disability, exclude a qualified student with disabilities or a student covered under Section 504 if the student can, with minor adjustments, be provided supplemental educational services designed to meet the individual educational needs of the student unless otherwise provided by law.

(4) As a condition of approval, a State may not require a provider to——

(i) Hire only staff who meet the requirements under §§ 200.55 and 200.56; or

(ii) Document that its instructional strategies include scientifically based research, as that term is defined in section 9101(37) of the Act.

(Authority: 20 U.S.C. 6316(e))

§ 200.48 Funding for choice-related transportation and supplemental educational services.

(a) *Amounts required.* (1) To pay for choice-related transportation and supplemental educational services required under section 1116 of the Act, an LEA may use—

(i) Funds allocated under subpart A of this part;

(ii) Funds, where authorized, from other Federal education programs; and

(iii) State, local, or private resources.

(2) Unless a lesser amount is needed, the LEA must spend an amount equal to 20 percent of its allocation under subpart A of this part to——

(i) Provide, or pay for, transportation of students exercising a choice option under § 200.44;

(ii) Satisfy all requests for supplemental educational services under § 200.45; or

(iii) Pay for both paragraph (a)(2)(i) and (ii) of this section, except that——

(A) If the cost of satisfying all requests for supplemental educational services under § 200.45 exceeds an amount equal to 5 percent of the LEA's allocation under subpart A of this part, the LEA may not spend less than this amount for supplemental educational services; and

(B) The LEA may not include costs for transportation or administration in meeting this 5 percent requirement

(3) If the amount specified in paragraph (a)(2) of this section is insufficient to pay all choice-related transportation costs, the LEA may, but is not required to, make available any additional needed funds from Federal, State, or local sources.

(4) To assist an LEA that does not have sufficient funds to make available supplemental educational services to all students requesting these services, an SEA may use funds that it reserves under part A of Title I and part A of Title V.

(b) *Cap on school-level reduction.* (1) An LEA may not, in applying paragraph (a) of this section, reduce by more than 15 percent the total amount it makes available under subpart A of this part to a school it has identified for corrective action or restructuring.

(c) *Per-child funding for supplemental educational services.* For each student receiving supplemental educational services under § 200.45, the LEA must make available the lesser of——

(1) The amount of its allocation under subpart A of this part, divided by the number of students from families below the poverty level, as counted under section 1124(c)(1)(A) of the Act; or

(2) The actual costs of the supplemental educational services received by the student.

(Authority: 20 U.S.C. 6316)

§ 200.49 SEA responsibilities for school improvement, corrective action, and restructuring.

(a) *Transition requirements for public school choice and supplemental educational services.* (1) Except as described in §§ 200.32(d) and 200.33(c), if a school was in school improvement or subject to corrective action on January 7, 2002, the SEA must ensure that the LEA for that school provides public school choice in accordance with § 200.44 not later than the first day of the 2002–2003 school year.

(2) Except as described in §§ 200.32(d) and 200.33(c), if a school was in school improvement status for two or more consecutive school years or subject to corrective action on January 7, 2002, the SEA must ensure that the LEA for that school makes available supplemental educational services in accordance with § 200.45 not later than the first day of the 2002–2003 school year.

(b) *State reservation of funds for school improvement.* (1) In accordance with § 200.100(a), an SEA must reserve two percent of the amount it receives under subpart A of this part for fiscal years 2002 and 2003, and four percent of the amount it receives under subpart A of this part for fiscal years 2004 through 2007, to——

(i) Support local school improvement activities;

(ii) Provide technical assistance to schools identified for improvement, corrective action, or restructuring; and

(iii) Provide technical assistance to LEAs that the SEA has identified for improvement or corrective action in accordance with § 200.50.

(2) Of the amount it reserves under paragraph (a)(1) of this section, the SEA must—

(i) Allocate not less than 95 percent directly to LEAs serving schools identified for improvement, corrective action, and restructuring to support improvement activities; or

(ii) If requested by an LEA, directly provide for these improvement activities or arrange to provide them through such entities as school support teams or educational service agencies.

(3) In providing assistance to LEAs under paragraph (b)(2) of this section, the SEA must give priority to LEAs that—

(i) Serve the lowest-achieving schools;

(ii) Demonstrate the greatest need for this assistance; and

(iii) Demonstrate the strongest commitment to ensuring that this assistance will be used to enable the lowest-achieving schools to meet the progress goals in the school improvement plans under § 200.41.

(c) *Technical assistance.* The SEA must make technical assistance available, through the statewide system of support and improvement required by section 1117 of the Act, to schools that LEAs have identified for improvement, corrective action, or restructuring.

(d) *LEA failure.* If the SEA determines that an LEA has failed to carry out its responsibilities with respect to school improvement, corrective action, or restructuring, the SEA must take the corrective actions it determines to be appropriate and in compliance with State law.

(e) *Assessment results.* (1) The SEA must ensure that the results of academic assessments administered as part of the State assessment system in a given school year are available to LEAs before the beginning of the next school year.

(2) The SEA must provide the results described in paragraph (e)(1) of this section to a school before an LEA may identify the school for school improvement under § 200.32, corrective action under § 200.33, or restructuring under § 200.34.

(f) *Factors affecting student achievement.* Consistent with section 1111(b)(9) of the Act, the SEA must notify the Secretary of Education of major factors that have significantly affected student academic achievement in schools and LEAs identified for improvement within the State.

(Authority: 20 U.S.C. 6316)

23. Revise §§ 200.50 and 200.51 and place them under the new undesignated center heading ''LEA and School Improvement'' in subpart A of part 200 to read as follows:

§ 200.50 SEA review of LEA progress.

(a) *State review.* (1)(i) An SEA must annually review the progress of each LEA in its State that receives funds under subpart A of this part.

(ii) The review must determine whether—

(A) The LEA's schools served under subpart A of this part are making adequate yearly progress toward meeting the State's student academic achievement standards; and

(B) The LEA is carrying out its responsibilities under subpart A of this part with respect to technical assistance, parental involvement, and professional development.

(2) In reviewing the progress of an LEA, the SEA may, in the case of targeted assistance schools served by the LEA, consider the progress only of the students served or eligible for services under subpart A of this part, provided the students selected for services in such schools are those with the greatest need for academic assistance, consistent with the requirements of section 1115 of the Act.

(b) *Rewards.* If an LEA has exceeded adequate yearly progress as defined under §§ 200.13 through 200.20 for two consecutive years, the SEA may—

(1) Reserve funds in accordance with § 200.100(c); and

(2) Make rewards of the kinds described under section 1117 of the Act.

(c) *Opportunity for review of LEA-level data.* (1) Before identifying an LEA for improvement or corrective action, the SEA must provide the LEA with an opportunity to review the data, including academic assessment data, on which the SEA has based the proposed identification.

(2)(i) If the LEA believes that the proposed identification is in error for statistical or other substantive reasons, the LEA may provide supporting evidence to the SEA.

(ii) The SEA must consider the evidence before making a final determination not later than 30 days after it has provided the LEA with the opportunity to review the data under paragraph (c)(1) of this section.

(d) *Identification for improvement.* (1) The SEA must identify for improvement an LEA that, for two consecutive years, including the period immediately before January 8, 2002, fails to make adequate yearly progress as defined under §§ 200.13 through 200.20.

(2) The SEA must identify for improvement an LEA that was in improvement status on January 7, 2002.

(3) The SEA may identify an LEA for improvement if, on the basis of assessments the LEA administers during the 2001–2002 school year, the LEA fails to make adequate yearly progress for a second consecutive year.

(4) The SEA may remove an LEA from improvement status if, on the basis of assessments the LEA administers during the 2001–2002 school year, the LEA makes adequate yearly progress for a second consecutive year.

(e) *Identification for corrective action.* After providing technical assistance under § 200.52(b), the SEA—

(1) May take corrective action at any time with respect to an LEA that the SEA has identified for improvement under paragraph (d) of this section;

(2) Must take corrective action—

(i) With respect to an LEA that fails to make adequate yearly progress, as defined under §§ 200.13 through 200.20, by the end of the second full school year following the year in which the LEA administered the assessments that resulted in the LEA's failure to make adequate yearly progress for a second consecutive year and led to the SEA's identification for improvement under paragraph (d) of this section; and

(ii) With respect to an LEA that was in corrective action status on January 7, 2002; and

(3) May remove an LEA from corrective action if, on the basis of assessments administered by the LEA during the 2001–2002 school year, it makes adequate yearly progress for a second consecutive year.

(f) *Delay of corrective action.* (1) The SEA may delay implementation of corrective action under § 200.53 for a period not to exceed one year if—

(i) The LEA makes adequate yearly progress for one year; or

(ii) The LEA's failure to make adequate yearly progress is due to exceptional or uncontrollable circumstances, such as a natural disaster or a precipitous and unforeseen decline in the LEA's financial resources.

(2)(i) The SEA may not take into account the period of delay referred to in paragraph (f)(1) of this section in determining the number of consecutive years the LEA has failed to make adequate yearly progress; and

(ii) The SEA must subject the LEA to further actions following the period of delay as if the delay never occurred.

(g) *Continuation of public school choice and supplemental educational services.* An SEA must ensure that an LEA identified under paragraph (d) or (e) of this section continues to offer public school choice in accordance with § 200.44 and supplemental educational services in accordance with § 200.45.

(h) *Removal from improvement or corrective action status.* If an LEA makes adequate yearly progress for two consecutive years following identification for improvement under paragraph (d) of this section, the SEA need no longer—

(1) Identify the LEA for improvement; or

(2) Subject the LEA to corrective action for the succeeding school year.

(Authority: 20 U.S.C. 6316(c))

§ 200.51 Notice of SEA action.

(a) *In general.* (1) An SEA must—

(i) Communicate with parents throughout the review of an LEA under § 200.50; and

(ii) Ensure that, regardless of the method or media used, it provides information to parents—

(A) In an understandable and uniform format, including alternative formats upon request; and

(B) To the extent practicable, in a language that parents can understand.

(2) The SEA must provide information to parents—

(i) Directly, through such means as regular mail or, if possible, e-mail; and

(ii) Through broader means of dissemination such as the Internet, the media, and public agencies serving the student population and their families.

(3) All communications must respect the privacy of students and their families.

(b) *Results of review.* The SEA must publicize and disseminate to the LEAs, teachers and other staff, parents, students, and the community the results of its review under § 200.50, including statistically sound disaggregated results in accordance with §§ 200.2 and 200.7.

(c) *Identification for improvement or corrective action.* If the SEA identifies an LEA for improvement or subjects the LEA to corrective action, the SEA must promptly provide to the parents of each student enrolled in a school served by the LEA—

(1) The reasons for the identification; and

(2) An explanation of how parents can participate in upgrading the LEA.

(d) *Information about action taken.* (1) The SEA must publish, and disseminate to parents and the public, information on any corrective action the SEA takes under § 200.53.

(2) The SEA must provide this information—

(i) In a uniform and understandable format, including alternative formats upon request; and

(ii) To the extent practicable, in a language that parents can understand.

(3) The SEA must disseminate the information through such means as the Internet, the media, and public agencies.

(Authority: 20 U.S.C. 6316(c))

24. Add new §§ 200.52 through 200.54 and place them under the new undesignated center heading ''LEA and School Improvement'' in subpart A of part 200 to read as follows:

§ 200.52 LEA improvement.

(a) *Improvement plan.* (1) Not later than 3 months after an SEA has identified an LEA for improvement under § 200.50(d), the LEA must develop or revise an LEA improvement plan.

(2) The LEA must consult with parents, school staff, and others in developing or revising its improvement plan.

(3) The LEA improvement plan must:

(i) Incorporate strategies, drawn from scientifically based research, that will strengthen instruction in core academic subjects in schools served by the LEA.

(ii) Identify actions that have the greatest likelihood of improving the achievement of participating children in meeting the State's student academic achievement standards.

(iii) Address the professional development needs of the instructional staff serving the LEA by committing to spend for professional development not less than 10 percent of the funds received by the LEA under subpart A of this part for each fiscal year in which the SEA identifies the LEA for improvement. These funds—

(A) May include funds reserved by schools for professional development under § 200.41(c)(5); but

(B) May not include funds reserved for professional development under section 1119 of the Act.

(iv) Include specific measurable achievement goals and targets—

(A) For each of the groups of students described in the disaggregated data under § 200.13(b)(7); and

(B) That are consistent with adequate yearly progress as defined under §§ 200.13 through 200.20.

(v) Address—

(A) The fundamental teaching and learning needs in the schools of the LEA; and

(B) The specific academic problems of low-achieving students, including a determination of why the LEA's previous plan failed to bring about increased student academic achievement.

(vi) As appropriate, incorporate activities before school, after school, during the summer, and during any extension of the school year.

(vii) Specify the responsibilities of the SEA and LEA under the plan, including the technical assistance the SEA must provide under paragraph (b) of this section and the LEA's responsibilities under section 1120A of the Act.

(viii) Include strategies to promote effective parental involvement in the schools served by the LEA.

(4) The LEA must implement the improvement plan—including any revised plan—expeditiously, but not later than the beginning of the school year following the year in which the LEA administered the assessments that resulted in the LEA's failure to make adequate yearly progress for a second consecutive year and led to the SEA's identification of the LEA for improvement under § 200.50(d).

(b) *SEA technical assistance.* (1) An SEA that identifies an LEA for improvement under § 200.50(d) must, if requested, provide or arrange for the provision of technical or other assistance to the LEA, as authorized under section 1117 of the Act.

(2) The purpose of the technical assistance is to better enable the LEA to—

(i) Develop and implement its improvement plan; and

(ii) Work with schools needing improvement.

(3) The technical assistance provided by the SEA or an entity authorized by the SEA must—

(i) Be supported by effective methods and instructional strategies drawn from scientifically based research; and

(ii) Address problems, if any, in implementing the parental involvement and professional development activities described in sections 1118 and 1119, respectively, of the Act.

(Authority: 20 U.S.C. 6316(c))

§ 200.53 LEA corrective action.

(a) *Definition.* For the purposes of this section, the term ''corrective action'' means action by an SEA that—

(1) Substantially and directly responds to—

(i) The consistent academic failure that caused the SEA to identify an LEA for corrective action; and

(ii) Any underlying staffing, curriculum, or other problems in the LEA;

(2) Is designed to increase substantially the likelihood that each group of students described in § 200.13(b)(7) and enrolled in the LEA's schools will meet or exceed the State's proficient levels of achievement as measured by the State assessment system; and

(3) Is consistent with State law.

(b) *Notice and hearing.* Before implementing any corrective action under paragraph (c) of this section, the SEA must provide notice and a hearing to the affected LEA—if State law provides for this notice and hearing—not later than 45 days following the decision to take corrective action.

(c) *Requirements.* If the SEA identifies an LEA for corrective action, the SEA must do the following:

(1) Continue to make available technical assistance to the LEA.

(2) Take at least one of the following corrective actions:

(i) Defer programmatic funds or reduce administrative funds.

(ii) Institute and fully implement a new curriculum based on State and local content and academic achievement standards, including the provision of appropriate professional development for all relevant staff that—

(A) Is grounded in scientifically based research; and

(B) Offers substantial promise of improving educational achievement for low-achieving students.

(iii) Replace the LEA personnel who are relevant to the failure to make adequate yearly progress.

(iv) Remove particular schools from the jurisdiction of the LEA and establish alternative arrangements for public governance and supervision of these schools.

(v) Appoint a receiver or trustee to administer the affairs of the LEA in place of the superintendent and school board.

(vi) Abolish or restructure the LEA.

(vii) In conjunction with at least one other action in paragraph (c)(2) of this section—

(A) Authorize students to transfer from a school operated by the LEA to a higher-performing public school operated by another LEA in accordance with § 200.44, and

(B) Provide to these students transportation, or the costs of transportation, to the other school consistent with § 200.44(h).

(Authority: 20 U.S.C. 6316(c)(10))

§ 200.54 Rights of school and school district employees.

(a) Nothing in §§ 200.30 through 200.53 is intended to alter or otherwise affect the rights, remedies, and procedures afforded school or school district employees under Federal, State, or local laws (including applicable regulations or court orders) or under the terms of collective bargaining agreements, memoranda of understanding, or other agreements between those employees and their employers in effect on January 8, 2002.

(b)(1) Any State or local law, regulation, or policy adopted after January 8, 2002 may not exempt an LEA from taking actions it may be required to take with respect to school or school district employees to implement §§ 200.30 through 200.53.

(2) When the collective bargaining agreements, memoranda of understanding, or other agreements referred to in paragraph (a) of this section are renegotiated, an LEA must ensure that those agreements do not prohibit actions that the LEA may be required to take with respect to school or school district employees to implement §§ 200.30 through 200.53.

(Authority: 20 U.S.C. 6316(d))

25. Add a new undesignated center heading to subpart A of part 200 and place it after § 200.54 to read as follows:

Qualifications of Teachers and Paraprofessionals

26. Add new §§ 200.55 through 200.59 and place them under the new undesignated center heading ''Qualifications of Teachers and Paraprofessionals'' in subpart A of part 200 to read as follows:

§ 200.55 Qualifications of teachers.

(a) *Newly hired teachers in Title I programs.* (1) An LEA must ensure that all teachers hired after the first day of the 2002–2003 school year to teach core academic subjects in a program supported with funds under subpart A of this part are highly qualified as defined in § 200.56.

(2) For the purpose of paragraph (a)(1) of this section, a teacher teaching in a program supported with funds under subpart A of this part is—

(i) A teacher in a targeted assisted school who is paid with funds under subpart A of this part; or

(ii) A teacher in a schoolwide program school.

(b)(1) *All teachers of core academic subjects.* Not later than the end of the 2005–2006 school year, each State that receives funds under subpart A of this part must ensure that all teachers in the State who teach core academic subjects are highly qualified as defined in § 200.56.

(2) A teacher of a subject other than a core academic subject—such as some vocational education teachers—is not required to meet the requirements in § 200.56.

(c) *Definition.* The term ''core academic subjects'' means English, reading or language arts, mathematics, science, foreign languages, civics and government, economics, arts, history, and geography.

(Authority: 20 U.S.C. 6319; 7801(11))

§ 200.56 Definition of ''highly qualified teacher.''

To be a ''highly qualified teacher,'' a teacher covered under § 200.55 must meet the requirements in paragraph (a) and either paragraph (b) or (c) of this section.

(a) *In general.* (1) Except as provided in paragraph (a)(2) of this section, a teacher covered under § 200.55 must—

(i) Have obtained full State certification as a teacher—which may include certification obtained through alternative routes to certification; or

(ii)(A) Have passed the State teacher licensing examination; and

(B) Hold a license to teach in the State.

(iii) A teacher meets the requirement in paragraphs (a)(1)(i) or (ii) of this section if the teacher—

(A) Has fulfilled the State's certification and licensure requirements applicable to the years of experience the teacher possesses; or

(B) Is participating in an alternate route certification program under which the teacher is—

(*1*) Permitted by the State to assume functions as a teacher; and

(*2*) Making satisfactory progress toward full certification as prescribed by the State and the program.

(2) A teacher teaching in a public charter school in a State must meet the certification and licensure requirements, if any, contained in a State's charter school law.

(3) If a teacher has had certification or licensure requirements waived on an emergency, temporary, or provisional basis, the teacher is not highly qualified.

(b) *Teachers new to the profession.* A teacher covered under § 200.55 who is new to the profession must—

(1) Hold at least a bachelor's degree; and

(2) At the elementary level, demonstrate, by passing a State test, subject knowledge and teaching skills in reading/language arts, writing, mathematics, and other areas of the basic elementary school curriculum; or

(3) At the middle and high school levels, demonstrate a high level of competency by—

(i) Passing a State test in each academic subject in which the teacher teaches; or

(ii) Successfully completing in each academic subject in which the teacher teaches—

(A) An undergraduate major;

(B) A graduate degree;

(C) Coursework equivalent to an undergraduate major; or

(D) Advanced certification or credentials.

(c) *Teachers not new to the profession.* A teacher covered under § 200.55 who is not new to the profession must—

(1) Hold at least a bachelor's degree;

(2) Meet the applicable requirements in paragraph (b) of this section; and

(3) Based on a high, objective, uniform State standard of evaluation in accordance with section 9101(23)(C)(ii) of the Act, demonstrate competence in all the academic subjects in which the teacher teaches.

(Authority: 20 U.S.C. 7801(23))

§ 200.57 Plans to increase teacher quality.

(a) *State plan.* (1) A State that receives funds under subpart A of this part must develop a plan to ensure that all teachers in the State who teach core academic subjects are highly qualified not later than the end of the 2005–2006 school year.

(2) The State's plan—

(i) Must establish annual measurable objectives for each LEA and school that include, at a minimum, an annual increase in the percentage of—

(A) Highly qualified teachers at each LEA and school; and

(B) Teachers who are receiving high-quality professional development as

defined in section 9101(34) of the Act; and

(ii) May include other measures that the State determines are appropriate to increase teacher qualifications.

(b) *Local plan.* An LEA that receives funds under subpart A of this part must develop a plan to ensure that all teachers in the LEA who teach core academic subjects are highly qualified not later than the end of the 2005–2006 school year.

(Authority: 20 U.S.C. 6319(a)(2)–(3); 7801(34))

§ 200.58 Qualifications of paraprofessionals.

(a)(1) *Applicability.* An LEA must ensure that each paraprofessional who works in a program supported with funds under subpart A of this part meets the requirements in paragraph (b) of this section and, except as provided in paragraph (e) of this section, the requirements in paragraph (c) or (d) of this section.

(2) For purposes of this section, the term ''paraprofessional''—

(i) Means an individual who provides instructional support consistent with § 200.59; and

(ii) Does not include individuals who have only non-instructional duties (such as providing technical support for computers, providing personal care services, or performing clerical duties).

(3) For the purpose of paragraph (a) of this section, a paraprofessional working in ''a program supported with funds under subpart A of this part'' is—

(i) A paraprofessional in a targeted assisted school who is paid with funds under subpart A of this part; or

(ii) Any paraprofessional in a schoolwide program school.

(b) *All paraprofessionals.* A paraprofessional covered under paragraph (a) of this section, regardless of the paraprofessional's hiring date, must have earned a secondary school diploma or its recognized equivalent.

(c) *New paraprofessionals.* A paraprofessional covered under paragraph (a) of this section who is hired after January 8, 2002 must have—

(1) Completed at least two years of study at an institution of higher education;

(2) Obtained an associate's or higher degree; or

(3)(i) Met a rigorous standard of quality, and can demonstrate—through a formal State or local academic assessment—knowledge of, and the ability to assist in instructing, as appropriate—

(A) Reading/language arts, writing, and mathematics; or

(B) Reading readiness, writing readiness, and mathematics readiness.

(ii) A secondary school diploma or its recognized equivalent is necessary, but not sufficient, to meet the requirement in paragraph (c)(3)(i) of this section.

(d) *Existing paraprofessionals.* Each paraprofessional who was hired before January 8, 2002 must meet the requirements in paragraph (c) of this section within four years after that date.

(e) *Exceptions.* A paraprofessional does not need to meet the requirements in paragraph (c) or (d) of this section if the paraprofessional—

(1)(i) Is proficient in English and a language other than English; and

(ii) Acts as a translator to enhance the participation of limited English proficient children under subpart A of this part; or

(2) Has duties that consist solely of conducting parental involvement activities.

(Authority: 20 U.S.C. 6319(c)–(f))

§ 200.59 Duties of paraprofessionals.

(a) A paraprofessional covered under § 200.58 may not be assigned a duty inconsistent with paragraph (b) of this section.

(b) A paraprofessional covered under § 200.58 may perform the following duties:

(1) One-on-one tutoring for eligible students if the tutoring is scheduled at a time when a student would not otherwise receive instruction from a teacher—that is, not during the regular school day.

(2) Assisting in classroom management.

(3) Assisting in computer instruction.

(4) Conducting parent involvement activities.

(5) Providing instructional support in a library or media center.

(6) Acting as a translator.

(7) Providing instructional support services.

(c)(1) A paraprofessional may not provide any instructional support service to a student unless the paraprofessional is working under the direct supervision of a teacher who meets the requirements in § 200.56.

(2) A paraprofessional works under the direct supervision of a teacher if—

(i) The teacher plans the instructional activities that the paraprofessional carries out;

(ii) The teacher evaluates the achievement of the students with whom the paraprofessional is working; and

(iii) The paraprofessional works in close and frequent physical proximity to the teacher.

(d) A paraprofessional may assume limited duties that are assigned to similar personnel who are not working in a program supported with funds under subpart A of this part—including non-instructional duties and duties that do not benefit participating students—if the amount of time the paraprofessional spends on those duties is the same proportion of total work time as the time spent by similar personnel at the same school.

(Authority: 20 U.S.C. 6319(g))

27. Revise § 200.60 and place it under the new undesignated center heading ''Qualifications of Teachers and Paraprofessionals'' in subpart A of part 200 to read as follows:

§ 200.60 Expenditures for professional development.

(a)(1) Unless a lesser amount is needed because most teachers and paraprofessionals covered under §§ 200.55 and 200.58 meet the requirements in those sections, an LEA must use funds it receives under subpart A of this part for professional development activities to ensure that teachers and paraprofessionals meet the requirements of §§ 200.56 and 200.58.

(2) The LEA must use these funds as follows:

(i) For each of fiscal years 2002 and 2003, the LEA must use not less than 5 percent or more than 10 percent of the funds it receives under subpart A of this part.

(ii) For each fiscal year after 2003, the LEA must use not less than 5 percent of the funds it receives under subpart A of this part.

(b) The LEA may use additional funds under subpart A of this part to support ongoing training and professional development, as defined in section 9101(34) of the Act, to assist teachers and paraprofessionals in carrying out activities under subpart A of this part.

(Authority: 20 U.S.C. 6319(h), (l); 7801(34))

27a. Add a new undesignated center heading following §200.60 to read as follows:

Participation of Eligible Children in Private Schools

28. Revise § 200.61 and place it under the undesignated center heading ''Participation of Eligible Children in Private Schools'' in subpart A of part 200 to read as follows:

§ 200.61 Responsibilities for providing services to private school children.

(a) After timely and meaningful consultation with appropriate officials of private schools, an LEA must—

(1) In accordance with §§ 200.61 through 200.66 and section 1120 of the Act, provide special educational services or other benefits under subpart A of this part, on an equitable basis and

in a timely manner, to eligible children who are enrolled in private elementary and secondary schools; and

(2) Ensure that teachers and families of these children participate, on a basis equitable to the participation of teachers and families of other children receiving these services in accordance with § 200.53.

(b) Eligible private school children are children who—

(1) Reside in participating public school attendance areas of the LEA, regardless of whether the private school they attend is located in the LEA; and

(2) Meet the criteria in section 1115(b) of the Act.

(c) Among the eligible private school children, the LEA must select children to participate, consistent with § 200.63.

(Authority: 20 U.S.C. 6315(b); 6320(a))

29. Add § 200.62 and place it under the undesignated center heading ''Participation of Eligible Children in Private Schools'' in subpart A of part 200 to read as follows:

§ 200.62 Consultation.

(a) In order to have timely and meaningful consultation, an LEA must consult with appropriate officials of private schools during the design and development of the LEA's program for eligible private school children.

(b) At a minimum, the LEA must consult on the following:

(1) How the LEA will identify the needs of eligible private school children.

(2) What services the LEA will offer to eligible private children.

(3) How and when the LEA will make decisions about the delivery of services.

(4) How, where, and by whom the LEA will provide services to eligible private school children.

(5) How the LEA will assess academically the services to private school children, and how the LEA will use the results of that assessment to improve Title I services.

(6) The size and scope of the equitable services that the LEA will provide to eligible private school children, and the proportion of funds that the LEA will allocate for these services.

(7) The method or sources of data that the LEA will use under § 200.78 to determine the number of private school children from low-income families residing in participating public school attendance areas, including whether the LEA will extrapolate data from a survey.

(8) The equitable services the LEA will provide to teachers and families of private school participating children.

(c)(1) Consultation by the LEA must—

(i) Include meetings of the LEA and appropriate officials of the private schools; and

(ii) Occur before the LEA makes any decision that affects the opportunity of eligible private school children to participate in Title I programs.

(2) The LEA must meet with officials of the private schools throughout the implementation and assessment of the Title I services.

(d)(1) Consultation must include—

(i) A discussion of service delivery mechanisms the LEA can use to provide equitable services to private school children; and

(ii) A thorough consideration and analysis of the views of the officials of the private schools on the provision of services through a contract with a third-party provider.

(2) If the LEA disagrees with the views of the officials of the private schools on the provision of services through a contract, the LEA must provide in writing to the officials of the private schools the reasons why the LEA chooses not to use a contractor.

(e)(1) The LEA must maintain in its records and provide to the SEA a written affirmation, signed by officials of each private school with participating children or appropriate private school representatives, that the required consultation has occurred.

(2) If the officials of the private schools do not provide the affirmations within a reasonable period of time, the LEA must submit to the SEA documentation that the required consultation occurred.

(f) An official of a private school shall have the right to complain to the SEA that the LEA did not—

(1) Engage in timely and meaningful consultation; or

(2) Consider the views of the officials of the private school.

(Authority: 20 U.S.C. 6320(b))

30. Revise §§ 200.63 through 200.65 and place them under the undesignated center heading ''Participation of Eligible Children in Private Schools'' in subpart A of part 200 to read as follows:

§ 200.63 Factors for determining equitable participation of private school children.

(a) *Equal expenditures.* (1) In the aggregate, funds expended by an LEA under subpart A of this part for services for eligible private school children in the aggregate must be equal to the amount of funds generated by private school children from low-income families under paragraph (a)(2) of this section.

(2) An LEA must meet this requirement as follows:

(i) In reserving funds off the top of its allocation to carry out the provisions of § 200.77, if the LEA reserves funds for instructional activities for public elementary or secondary school students at the district level, the LEA must provide equitable services to eligible private school children. The LEA must base equitable services from these reserved funds on the proportion of private school children from low-income families residing in participating public school attendance areas.

(ii) The LEA must reserve the amounts of funds generated by private school children under § 200.78 and, in consultation with appropriate officials of the private schools, may—

(A) Combine those amounts, along with funds under paragraph (a)(2)(i) of section, if appropriate, to create a pool of funds from which the LEA provides equitable services to eligible private school children, in the aggregate, in greatest need of those services; or

(B) Provide equitable services to eligible children in each private school with the funds generated by children from low-income families under § 200.78 who attend that private school.

(b) *Services on an equitable basis.* (1) The services that an LEA provides to eligible private school children must be equitable in comparison to the services and other benefits that the LEA provides to public school children participating under subpart A of this part.

(2) Services are equitable if the LEA—

(i) Addresses and assesses the specific needs and educational progress of eligible private school children on a comparable basis as public school children;

(ii) Meets the equal expenditure requirements under paragraph (a) of section; and

(iii) Provides private school children with an opportunity to participate that—

(A) Is equitable to the opportunity provided to public school children; and

(B) Provides reasonable promise of the private school children achieving the high levels called for by the State's student academic achievement standards.

(3) The LEA must provide services to eligible private school children either directly or through arrangements with another LEA or a third-party provider.

(4) The LEA must make the final decisions with respect to the services it will provide to eligible private school children.

(Authority: 20 U.S.C. 6320(a))

§ 200.64 Determining equitable participation of teachers and families of participating private school children.

(a)(1) From funds reserved for parent involvement and professional development under § 200.77, an LEA shall ensure that teachers and families of participating private school children participate on an equitable basis in parent involvement and professional development activities, respectively.

(2) The LEA must base equitable services on the proportion of private school children from low-income families residing in participating public school attendance areas.

(b) After consultation with appropriate officials of the private schools, the LEA must conduct professional development and parent involvement activities for the families and teachers of participating private school children either—

(1) In conjunction with the LEA's professional development and parent involvement activities; or

(2) Independently.

(c) Private school teachers are not covered by the requirements in § 200.56.

(Authority: 20 U.S.C. 6320(a))

§ 200.65 Requirements to ensure that funds do not benefit a private school.

(a) An LEA must use funds under subpart A of this part to provide services that supplement, and in no case supplant, the services that would, in the absence of Title I services, be available to participating private school children.

(b)(1) The LEA must use funds under subpart A of this part to meet the special educational needs of participating private school children.

(2) The LEA may not use funds under subpart A of this part A of this part for—

(i) The needs of the private school; or

(ii) The general needs of children in the private school.

(Authority: 20 U.S.C. 6320(a), 6321(b))

31. Add a new § 200.66 and place it under the undesignated center heading ''Participation of Eligible Children in Private Schools'' in subpart A of part 200 to read as follows:

§ 200.66 Requirements concerning property, equipment, and supplies for the benefit of private school children.

(a) The LEA must keep title to and exercise continuing administrative control of all property, equipment, and supplies that the LEA acquires with funds under subpart A of this part for the benefit of eligible private school children.

(b) The LEA may place equipment and supplies in a private school for the period of time needed for the program.

(c) The LEA must ensure that the equipment and supplies placed in a private school—

(1) Are used only for Title I purposes; and

(2) Can be removed from the private school without remodeling the private school facility.

(d) The LEA must remove equipment and supplies from a private school if—

(1) The LEA no longer needs the equipment and supplies to provide Title I services; or

(2) Removal is necessary to avoid unauthorized use of the equipment or supplies for other than Title I purposes.

(e) The LEA may not use funds under subpart A of this part for repairs, minor remodeling, or construction of private school facilities.

(Authority: 20 U.S.C. 6320(d))

32. Place reserved §§ 200.67 through 200.69 under the undesignated center heading ''Participation of Eligible Children in Private Schools'' in subpart A of part 200.

33–34. Add a new undesignated center heading to subpart A of part 200 and place it after reserved § 200.69 to read as follows:

Allocations to LEAS

35. Add new §§ 200.70 through 200.75 and place them under the revised undesignated center heading ''Allocations to LEAs'' in subpart A of part 200 to read as follows:

§ 200.70 Allocation of funds to LEAs in general.

(a) The Secretary allocates basic grants, concentration grants, targeted grants, and education finance incentive grants, through SEAs, to each eligible LEA for which the Bureau of the Census has provided data on the number of children from low-income families residing in the school attendance areas of the LEA (hereinafter referred to as the ''Census list'').

(b) In establishing eligibility and allocating funds under paragraph (a) of this section, the Secretary counts children ages 5 to 17, inclusive (hereinafter referred to as ''formula children'')—

(1) From families below the poverty level based on the most recent satisfactory data available from the Bureau of the Census;

(2) From families above the poverty level receiving assistance under the Temporary Assistance for Needy Families program under Title IV of the Social Security Act;

(3) Being supported in foster homes with public funds; and

(4) Residing in local institutions for neglected children.

(c) Except as provided in §§ 200.72, 200.75, and 200.100, an SEA may not change the Secretary's allocation to any LEA that serves an area with a total population of at least 20,000 persons.

(d) In accordance with § 200.74, an SEA may use an alternative method, approved by the Secretary, to distribute the State's share of basic grants, concentration grants, targeted grants, and education finance incentive grants to LEAs that serve an area with a total population of less than 20,000 persons.

(Authority: 20 U.S.C. 6333–6337)

§ 200.71 LEA eligibility.

(a) *Basic grants.* An LEA is eligible for a basic grant if the number of formula children counted for allocation purposes is—

(1) At least 10; and

(2) Greater than two percent of the LEA's total population ages 5 to 17 years, inclusive.

(b) *Concentration grants.* An LEA is eligible for a concentration grant if—

(1) The LEA is eligible for a basic grant under paragraph (a) of this section; and

(2) The number of formula children exceeds—

(i) 6,500; or

(ii) 15 percent of the LEA's total population ages 5 to 17 years, inclusive.

(c) *Targeted grants.* An LEA is eligible for a targeted grant if the number of formula children is—

(1) At least 10; and

(2) At least five percent of the LEA's total population ages 5 to 17 years, inclusive.

(d) *Education finance incentive grants.* An LEA is eligible for an education finance incentive grant if the number of formula children is—

(1) At least 10; and

(2) At least five percent of the LEA's total population ages 5 to 17 years, inclusive.

(Authority: 20 U.S.C. 6333–6337)

§ 200.72 Procedures for adjusting allocations determined by the Secretary to account for eligible LEAs not on the Census list.

(a) *General.* For each LEA not on the Census list (hereinafter referred to as a ''new'' LEA), an SEA must determine the number of formula children and the number of children ages 5 to 17, inclusive, in that LEA.

(b) *Determining LEA eligibility.* An SEA must determine basic grant, concentration grant, targeted grant, and education finance incentive grant eligibility for each new LEA and redetermine eligibility for the LEAs on the Census list, as appropriate, based on the number of formula children and

children ages 5 to 17, inclusive, determined in paragraph (a) of this section.

(c) *Adjusting LEA allocations.* An SEA must adjust the LEA allocations calculated by the Secretary to determine allocations for eligible new LEAs based on the number of formula children determined in paragraph (a) of this section.

(Authority: 20 U.S.C. 6333–6337)

§ 200.73 Applicable hold-harmless provisions.

(a) *General.* (1) Except as authorized under paragraph (c) of this section and § 200.100(d)(2), an SEA may not reduce the allocation of an eligible LEA below the hold-harmless amounts established under paragraph (a)(4) of this section.

(2) The hold-harmless protection limits the maximum reduction of an LEA's allocation compared to the LEA's allocation for the preceding year.

(3) Except as provided in § 200.100(d), an SEA must apply the hold-harmless requirement separately for basic grants, concentration grants, targeted grants, and education finance incentive grants as described in paragraph (a)(4) of this section.

(4) Under section 1122(c) of the Act, the hold-harmless percentage varies based on the LEA's proportion of formula children, as shown in the following table:

LEA's number of formula children ages 5 to 17, inclusive, as a percentage of its total population of children ages 5 to 17, inclusive	Hold-harmless percentage	Applicable grant formulas
(i) 30% or more	95	Basic Grants, Concentration Grants, Targeted Grants, and Education Finance Incentive Grants.
(ii) 15% or more but less than 30%	90	
(iii) Less than 15%	85	

(b) *Targeted grants and education finance incentive grants.* The number of formula children used to determine the hold-harmless percentage is the number before applying the weights described in section 1125 and section 1125A of the Act.

(c) *Adjustment for insufficient funds.* If the amounts made available to the State are insufficient to pay the full amount that each LEA is eligible to receive under paragraph (a)(4) of this section, the SEA must ratably reduce the allocations for all LEAs in the State to the amount available.

(d) *Eligibility for hold-harmless protection.* (1) An LEA must meet the eligibility requirements for basic grants, targeted grants, and education finance incentive grants under § 200.71 in order for any hold-harmless provision to apply.

(2) An LEA not meeting the eligibility requirements for concentration grants under § 200.71 must be paid its hold-harmless amount for four consecutive years.

(Authority: 20 U.S.C. 6332(c))

§ 200.74 Use of an alternative method to distribute grants to LEAs with fewer than 20,000 total residents.

(a) For eligible LEAs serving an area with a total population of less than 20,000 persons (hereinafter referred to as ''small LEAs''), an SEA may apply to the Secretary to use an alternative method to distribute basic grant, concentration grant, targeted grant, and education finance incentive grant funds.

(b) In its application, the SEA must—

(1) Identify the alternative data it proposes to use; and

(2) Assure that it has established a procedure through which a small LEA that is dissatisfied with the determination of its grant may appeal directly to the Secretary.

(c) The SEA must base its alternative method on population data that best reflect the current distribution of children from low-income families among the State's small LEAs and use the same poverty measure consistently across the State for all Title I, part A programs.

(d) Based on the alternative poverty data selected, the SEA must—

(1) Redetermine eligibility of its small LEAs for basic grants, concentration grants, targeted grants, and education finance incentive grants in accordance with § 200.71;

(2) Calculate allocations for small LEAs in accordance with the provisions of sections 1124, 1124A, 1125, and 1125A of the Act, as applicable; and

(3) Ensure that each LEA receives the hold-harmless amount to which it is entitled under § 200.73.

(e) The amount of funds available for redistribution under each formula is the separate amount determined by the Secretary under sections 1124, 1124A, 1125, and 1125A of the Act for eligible small LEAs after the SEA has made the adjustments required under § 200.72(c).

(f) If the amount available for redistribution to small LEAs under an alternative method is not sufficient to satisfy applicable hold-harmless requirements, the SEA must ratably reduce all eligible small LEAs to the amount available.

(Authority: 20 U.S.C. 6333–6337)

§ 200.75 Special procedures for allocating concentration grant funds in small States.

(a) In a State in which the number of formula children is less than 0.25 percent of the national total on January 8, 2002, an SEA may either—

(1) Allocate concentration grants among eligible LEAs in the State in accordance with §§ 200.72 and 200.74, as applicable; or

(2) Without regard to the allocations determined by the Secretary—

(i) Identify those LEAs in which the number or percentage of formula children exceeds the statewide average number or percentage of those children; and

(ii) Allocate concentration grant funds among the LEAs identified in paragraph (a)(2)(i) of this section based on the number of formula children in each of those LEAs.

(b) If the SEA in a small State meeting the criteria described in paragraph (a) of this section uses an alternative method under § 200.74, the SEA must use the poverty data approved under the alternative method to identify those LEAs with numbers or percentages of formula children that exceed the statewide average number or percentage of those children for the State as a whole.

(Authority: 20 U.S.C. 6334(b))

36. Add and reserve new § 200.76 and place it under the revised undesignated center heading ''Allocations to LEAs'' in subpart A of part 200.

36a. Add a new undesignated center heading following §200.76 to read as follows:

Procedures for the Within-District Allocation of LEA Program Funds

37. Add new §§ 200.77 and 200.78 and place them under the undesignated center heading ''Procedures for the Within-District Allocation of LEA Program Funds'' in subpart A of part 200 to read as follows:

§ 200.77 Reservation of funds by an LEA.

Before allocating funds in accordance with § 200.78, an LEA must reserve funds as are reasonable and necessary to—

(a) Provide services comparable to those provided to children in participating school attendance areas and schools to serve—

(1) Homeless children who do not attend participating schools, including providing educationally related support services to children in shelters and other locations where homeless children may live;

(2) Children in local institutions for neglected children; and

(3) If appropriate—

(i) Children in local institutions for delinquent children; and

(ii) Neglected and delinquent children in community-day school programs;

(b) Provide, where appropriate under section 1113(c)(4) of the Act, financial incentives and rewards to teachers who serve students in Title I schools identified for school improvement, corrective action, and restructuring;

(c) Meet the requirements for choice-related transportation and supplemental educational services in § 200.48, unless the LEA meets these requirements with non-Title I funds;

(d) Address the professional development needs of instructional staff, including—

(1) Professional development requirements under § 200.52(a)(2)(iii) if the LEA has been identified for improvement or corrective action; and

(2) Professional development expenditure requirements under § 200.60;

(e) Meet the requirements for parental involvement in section 1118(a)(3) of the Act;

(f) Administer programs for public and private school children under this part, including special capital expenses, if any, incurred in providing services to eligible private school children, such as—

(1) The purchase and lease of real and personal property (including mobile educational units and neutral sites);

(2) Insurance and maintenance costs;

(3) Transportation; and

(4) Other comparable goods and services, including non-instructional computer technicians; and

(g) Conduct other authorized activities, such as school improvement and coordinated services.

(Authority: 20 U.S.C. 6313(c)(3) and (4), 6316(b)(10), (c)(7)(iii), and (e)(6), 6318(a)(3), 6319(l), 6320).

§ 200.78 Allocation of funds to school attendance areas and schools.

(a)(1) An LEA must allocate funds under subpart A of this part to school attendance areas and schools, identified as eligible and selected to participate under section 1113(a) or (b) of the Act, in rank order on the basis of the total number of children from low-income families in each area or school.

(2)(i) In calculating the total number of children from low-income families, the LEA must include children from low-income families who attend private schools.

(ii) To obtain a count of private school children, the LEA may—

(A) Use the same poverty data the LEA uses to count public school children;

(B)(*1*) Use comparable poverty data from a different source such as a private school survey that, to the extent possible, protects the identity of families of private school students; and

(*2*) Extrapolate data from the survey based on a representative sample if complete actual data are unavailable;

(C) Apply the low-income percentage of each participating public school attendance area to the number of private school children who reside in that school attendance area; or

(D) Use an equated measure of low income correlated with the measure of low income used to count public school children.

(iii) An LEA may count private school children from low-income families every year or every two years.

(iv) The LEA shall have the final authority in determining the method used to calculate the number of private school children from low-income families;

(3) If an LEA ranks its school attendance areas and schools by grade span groupings, the LEA may determine the percentage of children from low-income families in the LEA as a whole or for each grade span grouping.

(b)(1) Except as provided in paragraphs (b)(2) and (d) of this section, an LEA must allocate to each participating school attendance area or school an amount for each low-income child that is at least 125 percent of the per-pupil amount of funds the LEA received for that year under part A, subpart 2 of Title I. The LEA must calculate this per-pupil amount before it reserves funds under § 200.77, using the poverty measure selected by the LEA under section 1113(a)(5) of the Act.

(2) If an LEA is serving only school attendance areas or schools in which the percentage of children from low-income families is 35 percent or more, the LEA is not required to allocate a per-pupil amount of at least 125 percent.

(c) An LEA is not required to allocate the same per-pupil amount to each participating school attendance area or school provided the LEA allocates higher per-pupil amounts to areas or schools with higher concentrations of poverty than to areas or schools with lower concentrations of poverty.

(d) An LEA may reduce the amount of funds allocated under this section to a school attendance area or school if the area or school is spending supplemental State or local funds for programs that meet the requirements in § 200.79.

(e) If an LEA contains two or more counties in their entirety, the LEA shall distribute to schools within each county a share of the LEA's total grant that is no less than the county's share of the child count used to calculate the LEA's grant.

(Authority: 20 U.S.C. 6313(c), 6320(a) and (c)(1), 6333(c)(2)).

38. Add a new undesignated center heading to subpart A of part 200 and place it after new § 200.78 to read as follows:

Fiscal Requirements

39. Add new § 200.79 and place it under the new undesignated center heading ''Fiscal Requirements'' in subpart A of part 200 to read as follows:

§ 200.79 Exclusion of supplemental State and local funds from supplement, not supplant and comparability determinations.

(a) For the purpose of determining compliance with the supplement not supplant requirement in section 1120A(b) and the comparability requirement in section 1120A(c) of the Act, a grantee or subgrantee under subpart A of this part may exclude supplemental State and local funds spent in any school attendance area or school for programs that meet the intent and purposes of Title I.

(b) A program meets the intent and purposes of Title I if the program either—

(1)(i) Is implemented in a school in which the percentage of children from low-income families is at least 40 percent;

(ii) Is designed to promote schoolwide reform and upgrade the entire educational operation of the school to support students in their achievement toward meeting the State's challenging academic achievement standards that all children are expected to meet;

(iii) Is designed to meet the educational needs of all children in the school, particularly the needs of children who are failing, or most at risk of failing, to meet the State's challenging

student academic achievement standards; and

(iv) Uses the State's assessment system under § 200.2 to review the effectiveness of the program; or

(2)(i) Serves only children who are failing, or most at risk of failing, to meet the State's challenging academic achievement standards;

(ii) Provides supplementary services designed to meet the special educational needs of the children who are participating in the program to support their achievement toward meeting the State's academic achievement standards; and

(iii) Uses the State's assessment system under § 200.2 to review the effectiveness of the program.

(c) The conditions in paragraph (b) of this section also apply to supplemental State and local funds expended under section 1113(b)(1)(D) and 1113(c)(2)(B) of the Act.

(Authority: 20 U.S.C. 6321(b) and (c))

40. Revise subpart B of part 200 to read as follows:

Subpart B—Even Start Family Literacy Programs

Sec.
200.80 Migrant Education Even Start Program definition.

Subpart B—Even Start Family Literacy Programs

§ 200.80 Migrant Education Even Start Program definition.

Eligible participants under the Migrant Education Even Start Program (MEES) are those who meet the definitions of a migratory child, a migratory agricultural worker, or a migratory fisher in § 200.81.

(Authority: 20 U.S.C. 6381a and 20 U.S.C. 6399)

41. Revise subpart C of part 200 to read as follows:

Subpart C—Migrant Education Program

Sec.
200.81 Program definitions.
200.82 Use of program funds for unique program function costs.
200.83 Responsibilities of SEAs to implement projects through a comprehensive needs assessment and a comprehensive State plan for service delivery.
200.84 Responsibilities of SEAs for evaluating the effectiveness of the MEP.
200.85 Responsibilities of SEAs and operating agencies for improving services to migratory children.
200.86 Use of MEP funds in schoolwide projects.
200.87 Responsibilities for participation of children in private schools.
200.88 Exclusion of supplemental State and local funds from supplement, not supplant and comparability determinations.
200.89 [Reserved]

Subpart C—Migrant Education Program

§ 200.81 Program definitions.

The following definitions apply to programs and projects operated under subpart C of this part:

(a) *Agricultural activity* means—

(1) Any activity directly related to the production or processing of crops, dairy products, poultry or livestock for initial commercial sale or personal subsistence;

(2) Any activity directly related to the cultivation or harvesting of trees; or

(3) Any activity directly related to fish farms.

(b) *Fishing activity* means any activity directly related to the catching or processing of fish or shellfish for initial commercial sale or personal subsistence.

(c) *Migratory agricultural worker* means a person who, in the preceding 36 months, has moved from one school district to another, or from one administrative area to another within a State that is comprised of a single school district, in order to obtain temporary or seasonal employment in agricultural activities (including dairy work) as a principal means of livelihood.

(d) *Migratory child* means a child who is, or whose parent, spouse, or guardian is, a migratory agricultural worker, including a migratory dairy worker, or a migratory fisher, and who, in the preceding 36 months, in order to obtain, or accompany such parent, spouse, guardian in order to obtain, temporary or seasonal employment in agricultural or fishing work—

(1) Has moved from one school district to another;

(2) In a State that is comprised of a single school district, has moved from one administrative area to another within such district; or

(3) Resides in a school district of more than 15,000 square miles, and migrates a distance of 20 miles or more to a temporary residence to engage in a fishing activity.

(e) Migratory fisher means a person who, in the preceding 36 months, has moved from one school district to another, or from one administrative area to another within a State that is comprised of a single school district, in order to obtain temporary or seasonal employment in fishing activities as a principal means of livelihood. This definition also includes a person who, in the preceding 36 months, resided in a school district of more than 15,000 square miles, and moved a distance of 20 miles or more to a temporary residence to engage in a fishing activity as a principal means of livelihood.

(f) Principal means of livelihood means that temporary or seasonal agricultural or fishing activity plays an important part in providing a living for the worker and his or her family.

(Authority: 20 U.S.C. 6391–6399, 6571)

§ 200.82 Use of program funds for unique program function costs.

An SEA may use the funds available from its State Migrant Education Program to carry out other administrative activities, beyond those allowable under § 200.101, that are unique to the MEP, including those that are the same or similar to administrative activities performed by LEAs in the State under subpart A of this part. These activities include but are not limited to:

(a) Statewide identification and recruitment of eligible migratory children;

(b) Interstate and intrastate coordination of the State MEP and its local projects with other relevant programs and local projects in the State and in other States;

(c) Procedures for providing for educational continuity for migratory children through the timely transfer of educational and health records, beyond that required generally by State and local agencies;

(d) Collecting and using information for accurate distribution of subgrant funds;

(e) Development of a statewide needs assessment and a comprehensive State plan for service delivery; and

(f) Supervision of instructional and support staff.

(Authority: 20 U.S.C. 6392, 6571)

§ 200.83 Responsibilities of SEAs to implement projects through a comprehensive needs assessment and a comprehensive State plan for service delivery.

(a) An SEA that receives a grant of MEP funds must develop and update a written comprehensive State plan (based on a current statewide needs assessment) that, at a minimum, has the following components:

(1) *Performance targets.* The plan must specify—

(i) Performance targets that the State has adopted for all children in reading and mathematics achievement, high school graduation, and the number of school dropouts, as well as the State's performance targets, if any, for school readiness; and

(ii) Any other performance targets that the State has identified for migratory children.

(2) *Needs assessment.* The plan must include an identification and assessment of—

(i) The unique educational needs of migratory children that result from the childrens' migratory lifestyle; and

(ii) Other needs of migratory students.

(3) *Service delivery.* The plan must describe the strategies that the SEA will pursue on a statewide basis to achieve the performance targets in paragraph (a)(1) of this section by addressing—

(i) First, the unique educational needs of migratory children consistent with paragraph (a)(2)(i) of this section; and

(ii) Then, the general educational needs of migratory children consistent with paragraph (a)(2)(ii) of this section.

(4) *Evaluation.* The plan must describe how the State will evaluate the effectiveness of its program.

(b) The SEA must develop its comprehensive State plan in consultation with the State parent advisory council or, for SEAs not operating programs for one school year in duration, in consultation with the parents of migratory children.

(c) Each SEA receiving MEP funds must ensure that its local operating agencies comply with the comprehensive State plan.

(Authority: 20 U.S.C. 6396)

§ 200.84 Responsibilities of SEAs for evaluating the effectiveness of the MEP.

Each SEA must determine the effectiveness of its program through a written evaluation that measures the implementation and results achieved by the program against the State's performance targets in § 200.83(a)(1), particularly for those students who have priority for service as defined in section 1304(d) of the Act.

(Authority: 20 U.S.C. 6394)

§ 200.85 Responsibilities of SEAs and operating agencies for improving services to migratory children.

While the specific school improvement requirements of section 1116 of the Act do not apply to the MEP, SEAs and local operating agencies receiving MEP funds must use the results of the evaluation carried out under § 200.84 to improve the services provided to migratory children.

(Authority: 20 U.S.C. 6394)

§ 200.86 Use of MEP funds in schoolwide projects.

Funds available under part C of Title I of the Act may be used in a schoolwide program subject to the requirements of § 200.28(c)(3)(i).

(Authority: 20 U.S.C. 6396)

§ 200.87 Responsibilities for participation of children in private schools.

An SEA and its operating agencies must conduct programs and projects under subpart C of this part in a manner consistent with the basic requirements of section 9501 of the Act.

(Authority: 20 U.S.C. 6394)

§ 200.88 Exclusion of supplemental State and local funds from supplement, not supplant and comparability determinations.

(a) For purposes of determining compliance with the comparability requirement in section 1120A(c) and the supplement, not supplant requirement in section 1120A(b) of the Act, a grantee or subgrantee under part C of Title I may exclude supplemental State and local funds expended in any school attendance area or school for carrying out special programs that meet the intent and purposes of part C of Title I.

(b) Before funds for a State and local program may be excluded for purposes of these requirements, the SEA must make an advance written determination that the program meets the intent and purposes of part C of Title I.

(c) A program meets the intent and purposes of part C of Title I if it meets the following requirements:

(1) The program is specifically designed to meet the unique educational needs of migratory children, as defined in section 1309 of the Act;

(2) The program is based on performance targets related to educational achievement that are similar to those used in programs funded under part C of Title I of the Act, and is evaluated in a manner consistent with those program targets;

(3) The grantee or subgrantee keeps, and provides access to, records that ensure the correctness and verification of these requirements; and

(4) The grantee monitors program performance to ensure that these requirements are met.

(Authority: 20 U.S.C. 6321(d))

§ 200.89 [Reserved]

42. Revise subpart D of part 200 to read as follows:

Subpart D—Prevention and Intervention Programs for Children and Youth Who Are Neglected, Delinquent, or At-risk of Dropping Out

Sec.
200.90 Program definitions.
200.91 SEA counts of eligible children.
200.92—200.99 [Reserved]

Subpart D—Prevention and Intervention Programs for Children and Youth Who Are Neglected, Delinquent, or At-risk of Dropping Out

§ 200.90 Program definitions.

(a) The following definitions apply to the programs authorized in part D, subparts 1 and 2 of Title I of the Act:

Children and youth means the same as ''children'' as that term is defined in § 200.103(a).

(b) The following definitions apply to the programs authorized in part D, subpart 1 of Title I of the Act:

Institution for delinquent children and youth means, as determined by the SEA, a public or private residential facility that is operated primarily for the care of children and youth who—

(1) Have been adjudicated to be delinquent or in need of supervision; and

(2) Have had an average length of stay in the institution of at least 30 days.

Institution for neglected children and youth means, as determined by the SEA, a public or private residential facility, other than a foster home, that is operated primarily for the care of children and youth who—

(1) Have been committed to the institution or voluntarily placed in the institution under applicable State law due to abandonment, neglect, or death of their parents or guardians; and

(2) Have had an average length of stay in the institution of at least 30 days.

Regular program of instruction means an educational program (not beyond grade 12) in an institution or a community day program for neglected or delinquent children that consists of classroom instruction in basic school subjects such as reading, mathematics, and vocationally oriented subjects, and that is supported by non-Federal funds. Neither the manufacture of goods within the institution nor activities related to institutional maintenance are considered classroom instruction.

(c) The following definitions apply to the local agency program authorized in part D, subpart 2 of Title I of the Act:

Immigrant children and youth and limited English proficiency have the same meanings as the term ''immigrant children'' is defined in section 3301 of the Act and the term ''limited English proficient'' is defined in section 9101 of the Act, except that the terms ''individual'' and ''children and youth'' used in those definitions mean ''children and youth'' as defined in this section.

Locally operated correctional facility means a facility in which persons are confined as a result of a conviction for a criminal offense, including persons

under 21 years of age. The term also includes a local public or private institution and community day program or school not operated by the State that serves delinquent children and youth.

Migrant youth means the same as ''migratory child'' as that term is defined in § 200.81(d).

(Authority: 20 U.S.C. 6432, 6454, 6472, 7801)

§ 200.91 SEA counts of eligible children.

To receive an allocation under part D, subpart 1 of Title I of the Act, an SEA must provide the Secretary with a count of children and youth under the age of 21 enrolled in a regular program of instruction operated or supported by State agencies in institutions or community day programs for neglected or delinquent children and youth and adult correctional institutions as specified in paragraphs (a) and (b) of this section:

(a) *Enrollment.* (1) To be counted, a child or youth must be enrolled in a regular program of instruction for at least—

(i) 20 hours per week if in an institution or community day program for neglected or delinquent children; or

(ii) 15 hours per week if in an adult correctional institution.

(2) The State agency must specify the date on which the enrollment of neglected or delinquent children is determined under paragraph (a)(1) of this section, except that the date specified must be—

(i) Consistent for all institutions or community day programs operated by the State agency; and

(ii) Represent a school day in the calendar year preceding the year in which funds become available.

(b) *Adjustment of enrollment.* The SEA must adjust the enrollment for each institution or community day program served by a State agency by—

(1) Multiplying the number determined in paragraph (a) of this section by the number of days per year the regular program of instruction operates; and

(2) Dividing the result of paragraph (b)(1) of this section by 180.

(c) *Date of submission.* The SEA must annually submit the data in paragraph (b) of this section no later than January 31.

(Authority: 20 U.S.C. 6432)

§§ 200.92—200.99 [Reserved]

43. Revise subpart E of part 200 to read as follows:

Subpart E—General Provisions

Sec.

200.100 Reservation of funds for school improvement, State administration, and the State academic achievement award program.
200.101–200.102 [Reserved]
200.103 Definitions.
200.104–200.109 [Reserved]

Subpart E—General Provisions

§ 200.100 Reservation of funds for school improvement, State administration, and the State academic achievement award program.

A State must reserve funds for school improvement, State administration, and State academic achievement awards as follows:

(a) *School improvement.* (1) To carry out school improvement activities authorized under sections 1116 and 1117 of the Act, an SEA must first reserve—

(i) Two percent from the sum of the amounts allocated to the State under section 1002(a) of the Act for fiscal years 2002 and 2003; and

(ii) Four percent from the sum of the amounts allocated to the State under section 1002(a) of the Act for fiscal year 2004 and succeeding years.

(2) In reserving funds under paragraph (a)(1) of this section, a State may not reduce the sum of the allocations an LEA receives under section 1002(a) of the Act below the sum of the allocations the LEA received under section 1002(a) for the preceding fiscal year.

(3) If funds under section 1002(a) are insufficient in a given fiscal year to implement both paragraphs (a) (1) and (2) of this section, a State is not required to reserve the full amount required under paragraph (a)(1).

(b) *State administration.* (1) An SEA may reserve for State administrative activities authorized in sections 1004 and 1903 of the Act no more than the greater of—

(i) One percent from each of the amounts allocated to the State or Outlying Area under section 1002 (a), (c), and (d) of the Act; or

(ii) $400,000 ($50,000 for the Outlying Areas).

(2)(i) An SEA reserving $400,000 under paragraph (b)(1)(ii) of this section must reserve proportionate amounts from each of the amounts allocated to the State or Outlying Area under section 1002(a), but is not required to reserve proportionate amounts from section 1002 (a), (c), and (d) of the Act.

(ii) If an SEA reserves funds from the amounts allocated to the State or Outlying Area under section 1002 (c) or (d) of the Act, the SEA may not reserve from those allocations more than the amount the SEA would have reserved if it had reserved proportionate amounts from section 1002 (a), (c), and (d) of the Act.

(3) If the sum of the amounts allocated to all the States under section 1002 (a), (c), and (d) of the Act is greater than $14,000,000,000, an SEA may not reserve more than one percent of the amount the State would receive if $14,000,000,000 had been allocated among the States under section 1002 (a), (c), and (d) of the Act.

(4) An SEA may use the funds it has reserved under this paragraph to perform general administrative activities necessary to carry out, at the State level, any of the programs authorized under Title I, parts A, C, and D of the Act.

(c) *State academic achievement awards program.* To operate the State academic achievement award program authorized under section 1117 (b)(1) and (c)(2)(A) of the Act, an SEA may reserve up to five percent of the excess amount the State receives under section 1002(a) of the Act when compared to the amount the State received under section 1002(a) of the Act in the preceding fiscal year.

(d) *Reservations and hold-harmless.* In reserving funds under paragraphs (b) and (c) of this section, an SEA may—

(1) Proportionately reduce each LEA's total allocation received under section 1002(a) of the Act while ensuring that no LEA receives in total less than the hold-harmless percentage under § 200.73(a)(4), except that when the amount remaining is insufficient to pay all LEAs the hold-harmless amount provided in § 200.73, the SEA shall ratably reduce each LEA's hold-harmless allocation to the amount available; or

(2) Proportionately reduce each LEA's total allocation received under section 1002(a) of the Act even if an LEA's total allocation falls below its hold-harmless percentage under § 200.74(a)(3).

(Authority: 20 U.S.C. 6303, 6304, 6317(c)(2)(A))

§§ 200.101–200.102 [Reserved]

§ 200.103 Definitions.

The following definitions apply to programs and projects operated under this part:

(a) *Children* means—

(1) Persons up through age 21 who are entitled to a free public education through grade 12; and

(2) Preschool children below the age and grade level at which the agency provides free public education.

(b) *Fiscal year* means the Federal fiscal year—a period beginning on October 1 and ending on the following September 30—or another 12-month

period normally used by the SEA for record-keeping.

(Authority: 20 U.S.C. 6315, 6571)

§§ 200.104–200.109 [Reserved]

[FR Doc. 02–19539 Filed 7–31–02; 4:01 pm]

BILLING CODE 4000–01–P

Federal Register

Tuesday,
August 6, 2002

Part III

Department of Housing and Urban Development

24 CFR Part 903

Public Housing Agency Plans: Deconcentration—Amendments to "Established Income Range" Definition; Final Rule

DEPARTMENT OF HOUSING AND URBAN DEVELOPMENT

24 CFR Part 903

[Docket No. FR–4677–F–02]

RIN 2577–AC31

Public Housing Agency Plans: Deconcentration—Amendments to ''Established Income Range'' Definition

AGENCY: Office of the Secretary, HUD.

ACTION: Final rule.

SUMMARY: This final rule amends the deconcentration component of HUD's Public Housing Agency (PHA) Plans regulations and revises the definition of Established Income Range (EIR) to include within the EIR those developments in which the average income level is at or below 30 percent of the area median income, and therefore ensure that such developments cannot be categorized as having average income ''above'' the EIR. An income level that is at or below 30 percent of the area median income is defined as ''extremely low income'' in HUD's regulations. HUD believes that developments with an average family income at or below 30 percent of the area median income should not be categorized as higher income developments for purposes of income mixing because efforts to place lower income families into these developments would not result in income deconcentration as contemplated by the statute. This rule follows publication of an August 15, 2001, proposed rule, takes into consideration public comment received on the proposed rule, and slightly revises the proposed rule for clarity.

DATES: Effective Date: September 5, 2002.

FOR FURTHER INFORMATION CONTACT: Rod Solomon, Deputy Assistant Secretary, Office of Policy, Program and Legislative Initiatives, Office of Public and Indian Housing, Department of Housing and Urban Development, 451 Seventh Street, SW, Room 4116, Washington, DC 20410; telephone (202) 708–0713 (this is not a toll-free number). Persons with hearing or speech impairments may access that number via TTY by calling the Federal Information Relay Service at (800) 877–8339.

SUPPLEMENTARY INFORMATION:

I. Background

On December 22, 2000 (65 FR 81214), HUD amended the deconcentration provisions of its Public Housing Agency (PHA) Plan regulations to achieve two purposes: (1) to assure that PHAs know what they must do to deconcentrate poverty in the public housing program; and (2) to assure that PHAs know what they must do to affirmatively further fair housing, as it relates to admissions to public housing. The December 22, 2000, final rule was preceded by an April 17, 2000, proposed rule, and took into consideration public comment received on the proposed rule. By a final rule published on February 5, 2001 (66 FR 8897), HUD amended the December 22, 2000, final rule to provide that the first PHA fiscal year that is covered by the new deconcentration requirements of the December 2000 final rule is the PHA fiscal year that begins October 1, 2001. (The December 22, 2000, final rule provided that the first PHA fiscal year that is covered by the new deconcentration requirements is the PHA fiscal year that begins July 1, 2001.)

Following issuance of the December 22, 2000, final rule, HUD received additional feedback from PHAs. PHAs advised HUD that in determining Established Income Range (EIR) for certain developments, in accordance with the procedures of the rule, the EIR for these developments is sufficiently low that some developments for which the average income is at or below 30 percent of the area median income, actually fall above the EIR. Developments that fall above the EIR are categorized as ''higher income developments'' and, in accordance with the deconcentration requirements, PHAs must undertake efforts to place lower income families into higher income developments. HUD regulations issued in December 2000 defined an income level that is at or below 30 percent of the area median income as ''extremely low income'' (24 CFR 5.603(b)). HUD agreed with PHA concerns that in all practicality deconcentration would not be fostered through efforts to place lower income families in developments categorized as higher income in which the average family income is in fact at the extremely low-income level.

While HUD's regulations issued on December 22, 2000, allowed a PHA to seek an exemption from income mixing by explaining why, in a given case, efforts to income mix would not effectively promote income deconcentration, HUD believed that this situation was widespread enough to merit a change in the regulation rather than PHAs and HUD having to treat developments in which the average family income is extremely low income on a case-by-case basis. On August 15, 2001 (66 FR 42926), HUD therefore published a proposed rule that would amend the deconcentration component of HUD's PHA Plans regulations to revise the definition of EIR to include within the EIR those developments in which the average income level is at or below 30 percent of the area median income.

II. This Final Rule

This final rule follows the August 15, 2001 proposed rule and is issued to help ensure that developments in which the average income level is at or below 30 percent of the median income cannot be categorized as having average income ''above'' the EIR. This final rule takes into consideration the public comments received on the proposed rule and slightly revises the proposed rule for clarity.

III. Public Comments Generally

The public comment period for the proposed rule closed on October 15, 2001. HUD received ten comments. Seven of the comments received were from PHAs; the remaining three comments were from legal service organizations. Most of the commenters expressed their support for HUD's proposed amendment to the deconcentration rule. However, most of the commenters also expressed that, while they supported HUD's efforts to revise the definition of EIR, they did not support the overall rule to deconcentrate. Several commenters in support of HUD's deconcentration efforts wrote that developments with average annual income at or below 30 percent of the area median income should not be categorized as ''higher income'' developments. Another commenter wrote that it is impractical to place ''higher income'' families in lower income developments as a mechanism to raise the average household income in these developments. All ten commenters offered suggestions to clarify and strengthen the deconcentration policy to better serve the housing community.

HUD also sought comments from PHAs on the requirements of the December 22, 2000, final rule for placing ''higher income families'' into ''lower income developments''. No changes were being proposed to those requirements in this rule. In requesting comments on this issue, however, HUD recognized that the success of income mixing actions may depend on marketability of a development and therefore may be beyond the PHA's control, at least to a certain extent; and that PHA efforts to achieve deconcentration by supporting resident self-sufficiency efforts as well as

necessary admissions efforts should be encouraged. HUD was therefore interested in PHA comments and feedback on the suitability of the December 22, 2000, final rule in this regard. In particular, HUD requested comments on whether the current rule's provisions that allow for explanations and justifications (and require corrective actions in the event HUD determines the explanations are not adequate) are sufficiently flexible to take into account these concerns. The following section of the preamble presents a summary of the significant issues raised by the public commenters on the August 15, 2001, proposed rule and HUD's responses to these comments.

IV. Discussion of Public Comments Received on the August 15, 2001, Proposed Rule

Comment: In the August 15 proposed rule HUD proposes to exclude from the requirement public housing developments with average incomes below 30 percent of area median income. The commenter wrote that should the amendment be adopted, every public housing development in its State would be exempt and there would be no need for the rule. The commenter noted further that should the amendment be adopted, such a result, could not have been anticipated by Congress.

HUD Response: According to HUD data about 82 percent of public housing family developments have average incomes below 30 percent of the area median income and 18 percent of public housing family developments have average incomes above 30 percent of the area median income. HUD believes that developments with an average family income at or below 30 percent of the area median income should not be categorized as higher income developments for purposes of income mixing because efforts to place lower income families into these developments would not result in income deconcentration as contemplated by the statute. Also, the deconcentration and income mixing policy should address only extensive income disparities among developments within a PHA.

Comment: HUD should consider changing ''the 30 percent of median'' criteria to ''30 percent of the national median income'' or, 30 percent of area median, whichever is higher. The commenter wrote that pursuant to HUD Notice PDR–2001–03 (April 6, 2001), the national median income is $52,500. Thirty percent of that amount is $15,750. The commenter noted that $15,750 is no more high-income than 30 percent of the median-income ($11,040) in their jurisdiction, and it is illogical to put lower income people into a $15,750 development to bring down the average as it is to put them into an $11,040 average development to bring down that average.

HUD Response: It is appropriate for HUD to take into account local market conditions when calculating median incomes. This method is used for public housing as well as HUD's other assisted housing programs when calculating median incomes.

Comment: HUD should abandon the deconcentration proposal in order to avoid harming low-income families in high-income states. One commenter wrote that in a state that has a much higher cost of living than most other wealthy states, low-income families with incomes that may be much higher than incomes elsewhere may be in greater distress. The commenter further noted that these families should not be deprived of the opportunity to reside in better and newer housing in less impacted neighborhoods.

HUD Response: As mentioned above, HUD's method for calculating median incomes takes into account local market conditions and makes adjustments for unusually high housing costs to income relationships. Also, nothing in this rule excludes low-income families from residing in better or newer housing. Admission policies, including preferences, are established at the local level.

Comment: HUD has failed to justify the need for the rule. One commenter wrote that HUD's deconcentration policy remains seriously flawed, and that the rule is unnecessary. The commenter noted further that their own statistical analysis indicates that there are very few developments that would fall outside the EIR and have residents with incomes above 30 percent of area median income. Additionally, the commenter wrote that HUD's deconcentration policy is administratively burdensome, and will require PHAs to do unnecessary income analysis of their developments.

HUD Response: As already discussed, HUD data indicate about 82 percent of public housing family developments have average incomes below 30 percent of the area median income and 18 percent of public housing family developments have average incomes above 30 percent of the area median income. This rule will simplify administrative requirements and not require a PHA to seek an exemption when the EIR for certain developments is sufficiently low that some developments for which the average income is at or below 30 percent of the area median income, actually fall above the EIR.

Comment: The policy requires an admissions-based solution if even one development in a portfolio is outside the parameters set by HUD. One commenter wrote that key management and policy decisions should be made through a local planning process that is responsive to local conditions, and not be mandated by the Federal government. The commenter noted further that he opposes the Federal requirement that the PHAs must ''deconcentrate'' through their admissions policies. Additionally, the commenter noted that the more important goal should be improving the economic conditions of all residents, rather than focusing on choosing families for a development based solely on their income.

HUD Response: Achieving deconcentration through admission policies is a statutory requirement. However, the final deconcentration rule published on December 22, 2000, does permit agencies to explain or justify cases where developments fall outside the EIR. HUD agrees that improving the economic conditions of all residents is an important goal.

Comment: HUD should amend the deconcentration rule to allow PHAs to adjust for unit/family size in a more refined method than required by the final rule. The commenter wrote that HUD's established method of adjustment is imprecise. The commenter noted further that PHAs should have the option of utilizing a range of methodologically valid techniques to make these adjustments instead of the prescribed method currently allowed by HUD.

HUD Response: This rule amends the definition of EIR but does not make changes to the broader deconcentration policy as described by the comment. However, the final deconcentration rule published on December 22, 2000, permits an agency to use median income instead of average income and to adjust its income analysis for unit size. This approach strikes a balance and provides agencies flexibility to perform their analysis, but at the same time makes administration and monitoring for HUD manageable.

Comment: True income mixing in public housing requires marketable units and adequate service levels. The commenter wrote that marketing to higher income families would be extremely difficult given the current poor condition of some public housing stock due to under funding of both the capital and operating costs. The commenter noted further that according

to HUD's own data, PHA operating subsidies have been under funded in the amount of almost $1.2 billion from fiscal year 1993 to fiscal year 2001.

HUD Response: This rule amends the definition of the EIR but does not make changes to the broader deconcentration policy as described by the comment. However, the final deconcentration rule published on December 22, 2000, does permit agencies to explain or justify cases where developments fall outside the EIR.

Comment: Increasing incomes in public housing will require more than administrative remedies. The commenter wrote that an admissions-based policy alone would never have the salutary effect of creating more viable, functional communities. The commenter suggested that this goal would be better served by strategies that aim not only to bring new, higher income residents into public housing, but that have the primary purpose to increase the incomes of existing public housing families.

HUD Response: HUD agrees that it is important to increase the incomes of existing residents. HUD has a strong commitment to providing employment opportunities, training, and supportive services to help low-income persons become self-sufficient. HUD has aggressively implemented laws to further many self-sufficiency efforts, for example by providing a model cooperation agreement for economic self-sufficiency between PHAs and Temporary Assistance to Needy Families (TANF) agencies. HUD plans additional initiatives to strengthen self-sufficiency efforts in the near future.

Comment: The rule should be modified to allow for certain family developments to always be treated as higher income. The commenter wrote that small developments in non-poverty areas, HOPE VI, mixed income, mixed finance and any development built after October 1998, the date Congress enacted the deconcentration policy, should always be treated as higher income. The commenter wrote that alternatively, if HUD decides to adopt the proposed 30 percent of the Area Median Income (AMI) rule, it should create an exception to that rule and not permit PHAs to exclude small developments in non-poverty areas, HOPE VI, mixed income, mixed finance, and any development built after October 1998, the date Congress enacted the deconcentration policy. The commenter noted further that these developments might be excluded if the 30 percent rule was applied uniformly.

HUD Response: HUD is not changing the rule to always treat certain developments as higher income. This would unnecessarily complicate the rule. Further, an income level that is at or below 30 percent of the area median income is defined as ''extremely low-income'' in HUD's regulations and is a low enough standard as a national policy. Nothing in this rule excludes extremely low-income families from residing in HOPE VI, mixed income, small, or scattered site developments of a PHA. The income mix of such developments may be addressed locally, including through local admissions preferences.

Comment: With respect to high-income Metropolitan Statistical Areas (MSAs), the rule should not apply. One commenter wrote that it is misleading to use 30 percent of the MSA median income of high-income MSAs, when there are great income disparities within the MSA as a result of affluent suburban areas or wealthy urban pockets. The commenter further noted that even in MSAs that are not high-income, it would be far more appropriate to use the median income figure for the area over which the PHA units are located (usually the central city) if there is to be any exclusion from the current rule at all. Additionally the commenter noted that it is inconceivable to use income figures based on areas in which the PHA has no units, when there is no way the deconcentration rule would result in any housing being offered in those areas.

HUD Response: As discussed in an earlier response, all HUD assisted housing programs use the same method to calculate income limits. HUD will not deviate from this approach and thus complicate the rule. PHAs may address the types of concerns raised by the comments through means such as local admissions preferences.

Comment: Scattered site developments should be excluded from the exemption. The commenter wrote that such developments should be excluded or at least subjected to closer scrutiny, perhaps by basing the analysis on the median income of the census tract in which the units are located.

HUD Response: As discussed in an earlier response, all HUD assisted housing programs use the same method to calculate income limits and HUD will not deviate from this approach. Also, local admissions preferences can address such situations.

Comment: The wording of the proposed rule is not entirely clear. The commenter wrote that the rule would be easier to understand if it read as follows: ''The EIR is from 85 percent to 115 percent (inclusive) of the average family income (the PHA-wide average income for covered developments as defined in Step 1), except that the upper limit shall never be less than the extremely low-income threshold (30 percent of median income) for the jurisdiction.''

HUD Response: HUD has accepted the suggestion and agreed to change part of the regulatory language. However, the rule will continue to reference the definition of extremely low-income family under 24 CFR 5.603(b) since the complete definition is too lengthy to repeat and the definition cite is referenced so that any future changes to the definition are made in one place only. The revised language at § 903.2(c)(1)(iii) Step 3 reads as follows: ''A PHA shall determine whether each of its covered developments falls above, within or below the EIR. The EIR is from 85 percent to 115 percent (inclusive) of the average family income (the PHA-wide average income for covered developments as defined in Step 1), except that the upper limit shall never be less than the income at which a family would be defined as an extremely low-income family under 24 CFR 5.603(b).''

Comment: HUD's resident database does not facilitate accurate analysis of poverty concentrations, so PHAs have to spend more time doing their own data analysis. The commenter wrote that HUD should suspend the ''deconcentration of poverty'' rule until the Multifamily Tenant Characteristics System (MTCS) or the Public Housing Information Center can provide accurate information on average tenant incomes for each family development. For example, the PHA has a 153-unit hi-rise for elderly and disabled residents in the same development (same HUD project number) as a 298-unit family townhouse development. The MTCS standard reports blend all of the resident data together, so a PHA cannot isolate the family development data needed to analyze ''concentration of poverty.''

HUD Response: The MTCS has a field that identifies the HUD project number of the development in which the resident lives. A public housing development includes units or buildings with the same project number. Typically developments with more than one building house similar types of residents, such as elderly or disabled persons or families, in each building. In the case described, where one project number includes an elderly and disabled resident hi-rise and a family townhouse development, this is considered a single development for purposes of deconcentration. If such a development falls outside the EIR, the final deconcentration rule published on December 22, 2000, permits an agency

to explain or justify the circumstances of how this development meets the goals of deconcentration and income mixing.

Comment: As amended, the deconcentration rule imposes new administrative burdens on PHAs and further complicates the already difficult task of running public housing, thereby driving up administrative costs. The commenter wrote that applicants and advocates are likely to be confused by a system of ''higher income'' and ''lower income'' buildings and developments, resulting in more complaints, more staff time devoted to explaining the system, more customer dissatisfaction, and more fair housing complaints.

HUD Response: This rule, which revises the definition of EIR to include within the EIR those developments in which the average income level is at or below 30 percent of the area median income, and therefore ensure that such developments cannot be categorized as having average income ''above'' the EIR, will simplify deconcentration requirements for many PHAs that will no longer have to explain or justify why they need not undertake documentation measures for some of their developments.

V. Findings and Certifications

Impact on Small Entities

The Secretary, in accordance with the Regulatory Flexibility Act (5 U.S.C. 605(b)), has reviewed and approved this final rule, and in so doing certifies that this rule does not have a significant economic impact on a substantial number of small entities. This rule amends the deconcentration component of HUD's PHA Plans regulations and revises the definition of EIR to ensure that included within that range are developments in which the average income level is at or below 30 percent of the area median income and therefore such developments cannot be categorized as having average income ''above'' the EIR. This rule does not impose a burden on small entities. This rule alleviates an administrative burden on PHAs that have developments in which the average income is extremely low-income.

Executive Order 13132, Federalism

Executive Order 13132 (entitled ''Federalism'') prohibits an agency from publishing any rule that has federalism implications if the rule either imposes substantial direct compliance costs on State and local governments and is not required by statute, or the rule preempts State law, unless the agency meets the consultation and funding requirements of section 6 of the Executive Order. This final rule does not have federalism implications and does not impose substantial direct compliance costs on State and local governments or preempt State law within the meaning of the Executive Order.

Environmental Impact

This issuance involves a discretionary establishment of external administrative or fiscal requirements or procedures related to rate or cost determinations that do not constitute a development decision affecting the physical condition of specific project areas or building sites. Accordingly, under 24 CFR 50.19(c)(6), this final rule is categorically excluded from environmental review under the National Environmental Policy Act of 1969 (42 U.S.C. 4321).

Regulatory Planning and Review

The Office of Management and Budget (OMB) reviewed this rule under Executive Order 12866, *Regulatory Planning and Review*. OMB determined that this rule is a ''significant regulatory action,'' as defined in section 3(f) of the Order (although not economically significant, as provided in section 3(f)(1) of the Order). Any changes made to this rule after its submission to OMB are identified in the docket file, which is available for public inspection in the office of the Department's Office of General Counsel, Regulations Division, Room 10276, 451 Seventh Street, SW, Washington, DC 20410–0500.

Unfunded Mandates Reform Act

Title II of the Unfunded Mandates Reform Act of 1995 (Pub. L. 104–4; approved March 22, 1995) (UMRA) establishes requirements for Federal agencies to assess the effects of their regulatory actions on State, local, and tribal governments, and on the private sector. This rule does not impose any Federal mandates on any State, local, or tribal governments, or on the private sector, within the meaning of the UMRA.

Catalog of Federal Domestic Assistance

The Catalog of Federal Domestic Assistance numbers applicable to the programs affected by this rule are 14.850 and 14.855.

List of Subjects in 24 CFR Part 903

Administrative practice and procedure, Public housing, Reporting and recordkeeping requirements.

For the reasons stated in the preamble, HUD amends part 903 of title 24 of the Code of Federal Regulations as follows:

PART 903—PUBLIC HOUSING AGENCY PLANS

1. The authority for 24 CFR part 903 continues to read as follows:

Authority: 42 U.S.C. 1437c; 42 U.S.C. 3535(d).

2. In § 903.2, paragraph (c)(1)(iii) is revised to read as follows:

§ 903.2 With respect to admissions, what must a PHA do to deconcentrate poverty in its developments and comply with fair housing requirements?

* * * * * *

(c) * * *

(1) * * *

(iii) *Step 3*. A PHA shall determine whether each of its covered developments falls above, within or below the Established Income Range. The Established Income Range is from 85 to 115 percent (inclusive) of the average family income (the PHA-wide average income for covered developments as defined in Step 1), except that the upper limit shall never be less than the income at which a family would be defined as an extremely low income family under 24 CFR 5.603(b).

* * * * *

Dated: July 9, 2002.

Michael Liu,

Assistant Secretary for Public and Indian Housing.

[FR Doc. 02–19751 Filed 8–5–02; 8:45 am]

BILLING CODE 4210–33–P

Federal Register

Tuesday,
August 6, 2002

Part IV

Department of Education

34 CFR Part 668 et al.

Student Assistance General Provisions, Federal Perkins Loan Program, Federal Family Education Loan Program, and William D. Ford Federal Direct Loan Program; Proposed Rule

DEPARTMENT OF EDUCATION

34 CFR Parts 668, 674, 682, and 685

RIN 1845–AA23

Student Assistance General Provisions, Federal Perkins Loan Program, Federal Family Education Loan Program, and William D. Ford Federal Direct Loan Program

AGENCY: Office of Postsecondary Education, Department of Education.

ACTION: Notice of proposed rulemaking.

SUMMARY: The Secretary proposes to amend the Student Assistance General Provisions, Federal Perkins Loan (Perkins Loan) Program, Federal Family Education Loan (FFEL) Program, and William D. Ford Federal Direct Loan (Direct Loan) Program regulations. The Secretary is amending these regulations to reduce administrative burden for program participants, to provide benefits to students and borrowers, and to protect taxpayers' interests.

DATES: We must receive your comments on or before October 7, 2002.

ADDRESSES: Address all comments about these proposed regulations to Ms. Gail McLarnon, U.S. Department of Education, P.O. Box 33076, Washington, DC 20033–3076. We encourage commenters to use e-mail because paper mail in the Washington area may be subject to delay, but please use one method only to provide your comments. If you comment via e-mail, we will send a return e-mail acknowledging our receipt of your comments. If you choose to send your comments through the Internet, use the following address: *LoanNPRM@ed.gov*

You must include the term ''Team I Loan Issues'' in the subject line of your electronic message.

If you want to comment on the information collection requirements, you must send your comments to the Office of Management and Budget at the address listed in the Paperwork Reduction Act section of this preamble. You may also send a copy of these comments to the Department representative named in this section.

FOR FURTHER INFORMATION CONTACT: Ms. Gail McLarnon, Telephone: (202) 219–7048 or via the Internet: *gail.mclarnon@ed.gov.*

If you use a telecommunications device for the deaf (TDD), you may call the Federal Information Relay Service (FIRS) at 1–800–877–8339.

Individuals with disabilities may obtain this document in an alternative format (*e.g.,* Braille, large print, audiotape, or computer diskette) on request to the contact person listed under **FOR FURTHER INFORMATION CONTACT.**

SUPPLEMENTARY INFORMATION:

Invitation To Comment

We invite you to submit comments regarding these proposed regulations. To ensure that your comments have maximum effect in developing the final regulations, we urge you to identify clearly the specific section or sections of the proposed regulations that each of your comments addresses and to arrange your comments in the same order as they are discussed in the Significant Proposed Regulations section of this document.

Section 482(c)(1) of the Higher Education Act of 1965, as amended (HEA) provides that in order for a regulatory change to be effective for the start of an award year on July 1, it must have been published in final form in the **Federal Register** no later than the preceding November 1. The Secretary's intent is to publish final rules resulting from this NPRM by November 1, 2002, making the new rules effective on July 1, 2003. However, section 482(c)(2) of the HEA allows the Secretary to designate regulatory provisions that an entity subject to the provision may, at its option, choose to implement earlier. Therefore, we are seeking suggestions on which of the proposed regulatory provisions in this NPRM, if finalized, should be so designated.

We also invite you to assist us in complying with the specific requirements of Executive Order 12866 and its overall requirement of reducing regulatory burden that might result from these proposed regulations. Please let us know of any further opportunities we should take to reduce potential costs or increase potential benefits while preserving the effective and efficient administration of the programs.

During and after the comment period, you may inspect all public comments about these proposed regulations at 1990 K Street, NW (8th Floor), Washington, DC, between the hours of 8:30 a.m. and 4 p.m., Eastern time, Monday through Friday of each week except Federal holidays. If you want to schedule an appointment to inspect the public comments, please contact the person listed under **FOR FURTHER INFORMATION CONTACT.**

Assistance to Individuals With Disabilities in Reviewing the Rulemaking Record

On request, we will supply an appropriate aid, such as a reader or print magnifier, to an individual with a disability who needs assistance to review the comments or other documents in the public rulemaking record for these proposed regulations. If you want to schedule an appointment for this type of aid, please contact the person listed under **FOR FURTHER INFORMATION CONTACT.**

Negotiated Rulemaking

Section 492 of the HEA requires the Secretary, before publishing any proposed regulations for programs authorized by Title IV of the HEA, to obtain public involvement in the development of the proposed regulations. After obtaining advice and recommendations from individuals and representatives of groups involved in the Federal student financial assistance programs, the Secretary must subject all proposed regulations to a negotiated rulemaking process. All proposed regulations that the Department publishes must conform to agreements resulting from that process unless the Secretary reopens the process or provides a written explanation to the participants in that process stating why the Secretary has decided to depart from the agreements.

We developed a list of proposed regulatory changes from advice and recommendations submitted by individuals and organizations in response to a May 24, 2001, request for recommendations on improving the Title IV student assistance programs from Representative Howard P. ''Buck'' McKeon and Representative Patsy Mink, the Chairman and Ranking Member, respectively, of the Subcommittee on 21st Century Competitiveness of the Education and the Workforce Committee of the U.S. House of Representatives.

On December 5, 2001, we published a notice in the **Federal Register** (66 FR 63203) announcing our intent to establish two negotiated rulemaking committees to develop proposed regulations. One committee (Committee I) would address issues related to the Title IV student loan programs. The other committee (Committee II) would address all other Title IV student aid issues. The notice requested nominations of individuals for membership on the committees who represented key stakeholder constituencies that are involved in the student financial assistance programs, with preference given to individuals who are actively involved in administering the Federal student financial assistance programs or whose interests are significantly affected by the regulations. In the notice, we identified the constituencies with interests that are

significantly affected by the subject matter of the negotiated rulemaking and announced that we expected that representatives of each of those constituencies would likely be selected as members of one, or both, committees. This Notice of Proposed Rulemaking (NPRM) is the result of the deliberations of Committee I.

The members of Committee I were:

- Corye Barbour and Ellynne Bannon (alternate), representing students, including the United States Student Association and the State PIRGs (Public Interest Research Groups) Higher Education Project;
- Deanne Loonin and Amy Marshall (alternate), representing legal assistance organizations that represent students; including the National Consumer Law Center and Community Legal Services;
- Irv Bodofsky and Virginia Foster (alternate), representing financial aid administrators at institutions of higher education; including the National Association of Student Financial Aid Administrators;
- Alisa Abadinsky and Laurie Quarles (alternate), representing business officers and bursars at institutions of higher education, and institutional servicers; including the Coalition of Higher Education Assistance Organizations and the National Association of College and University Business Officers;
- Reginald T. Cureton and William ''Buddy'' Blakey (alternate), representing institutions of higher education eligible to receive assistance from programs authorized under Titles III and V of the HEA; including the United Negro College Fund and the National Association for Equal Opportunity in Higher Education;
- George Chin and Patricia Smith (alternate), representing four-year public institutions of higher education; including the American Association of State Colleges and Universities;
- William Schilling and Maureen R. Budetti (alternate), representing private, non profit institutions of higher educations; including the National Association of Independent Colleges and Universities and the Association of American Jesuit Colleges and Universities;
- Ray Testa and Nancy Broff (alternate), representing for-profit postsecondary institutions; including the American Association of Cosmetology Schools and the Career College Association;
- Scott Miller and Elise Nowikowski (alternate), representing guaranty agencies and guaranty agency servicers; including the National Council of Higher Education Loan Programs, the Student Loan Servicing Alliance, the Guaranty Agency CEO Caucus, the National Association of Student Loan Administrators, Sallie Mae (USA Education, Inc.), and the National Association of State Scholarship and Grant Programs;
- Jane Stewart and Gail Somerville (alternate), representing lenders, secondary markets, and loan servicers; including the Consumer Bankers Association, the Education Finance Council, the Student Loan Servicing Alliance, the National Council of Higher Education Loan Programs, ELM Resources, and Sallie Mae;
- Dan Madzelan, representing the U.S. Department of Education.

At its first meeting, Committee I reached agreement on its protocols and agenda. During later meetings, the Committee reviewed and discussed drafts of proposed regulations. The Committee met over the course of several months, beginning in January 2002.

In addition to the proposed regulations discussed under the section of this document called Significant Proposed Regulations, Committee I discussed other issues related to the administration of the Title IV loan programs. One of these issues, which related to late disbursements of Title IV aid, was referred with recommendations to Committee II for disposition. Another issue that would have changed the regulation that provides that any single installment payment in a graduated or income sensitive repayment schedule cannot be more than three times greater than any other payment could not be addressed since there would be significant budgetary implications to the suggested change. One of the principles that the Secretary placed around this regulatory process was that no proposed change could have cost implications.

In order for the committee to have reached consensus, no member of the committee could dissent on the proposed regulations.

Consensus was reached by the members of Committee I on all of the proposed regulations in this document.

Significant Proposed Regulations

The following discussion of the proposed regulations begins with changes that affect more than one of the Title IV student loan programs.

This is followed by separate discussions of changes that affect only one of the three programs—the Perkins Loan Program, the FFEL Program, and the Direct Loan Program. Generally, we do not address proposed regulatory provisions that are technical or otherwise minor in effect.

Perkins Loan Program, FFEL Program, and Direct Loan Program Changes

Rehabilitation of Defaulted Loans (Sections 668.35, 674.39, 682.405, and 685.211)

Current Regulations: Section 668.35 of the current regulations allows a borrower who is in default on a Title IV loan to regain eligibility for additional Title IV assistance by either repaying the loan in full or by making arrangements to repay the loan that are satisfactory to the holder of the loan and in accordance with the individual Title IV loan program regulations. In addition, the borrower must, as part of those satisfactory arrangements, make at least six consecutive monthly payments. The regulations do not explicitly address defaulted loans on which a judgment has been obtained by a Perkins school lender, a guaranty agency, or by the Department.

Sections 674.39 and 682.405 of the current regulations require schools and guaranty agencies to make a loan rehabilitation program available to all defaulted Perkins, and FFEL borrowers, respectively, as required by the HEA. Section 685.211 implements the rehabilitation program for the Direct Loan Program. Sections 674.39 and 682.405 of the regulations also require a borrower who wishes to rehabilitate a loan on which a judgment has been obtained to sign a new promissory note. We also apply this requirement when rehabilitating a defaulted Direct Loan.

Suggested Change: Many schools that participate in the Perkins Loan Program suggested that rehabilitation should not be available to a borrower who had a Perkins Loan on which a judgment has been obtained. As a result of this suggestion, we included this issue on the negotiated rulemaking agenda and expanded the discussion to include the FFEL and Direct Loan programs.

Those schools that suggested the change for the Perkins Loan program and the negotiators representing their interests argued that requiring schools to offer rehabilitation to borrowers against whom they have secured a judgment is not in the best interests of the Perkins Loan Program. They noted that Perkins schools are required by the regulations to litigate in certain circumstances to collect a defaulted loan. They stated that the considerable amount of effort and financial resources spent on litigation to obtain a judgment is wasted when the school is later required to vacate that judgment upon receipt of the borrower's 12 consecutive monthly payments, as part of a rehabilitation plan. They also noted that by the time a school is required to

commence litigation and obtain a judgment on a defaulted loan, the borrower has had ample opportunity to rehabilitate the defaulted loan. Those negotiators pointed out that vacating the judgment also results in additional court and legal fees and jeopardizes future collection efforts and litigation if the borrower subsequently re-defaults. Finally, they noted that the judgment obtained as the result of litigation was the enforceable debt instrument, and therefore the borrower arguably was not entitled to the benefit of rehabilitation under the original promissory note.

Proposed Regulations: We are proposing to amend §§ 674.39(a), 682.405(a)(1), and 685.211(f) of the regulations to exclude from rehabilitation defaulted Perkins, FFEL, and Direct Loan program loans on which a judgment has been obtained. In doing so, we are also proposing conforming changes to remove the requirements in §§ 674.39(a)(3) and 682.405(a)(4) relating to rehabilitation of a loan on which a judgment has been issued.

We are also proposing to amend § 668.35 by adding a paragraph that allows a borrower who is subject to a judgment to re-establish eligibility for Title IV, HEA program assistance by repaying the debt in full, or by making repayment arrangements that are satisfactory to the holder of the debt and that include at least six consecutive monthly payments. We also propose to add a new paragraph to § 668.35, which provides that a student may reestablish eligibility under the provisions of § 668.35 only once. Finally, we are proposing to revise § 682.405(b)(1) to clarify that voluntary payments do not include payments made after a judgment has been obtained on a loan.

Reason: During the discussion of the suggested change to the regulations, several negotiators expressed interest in amending the regulations to make rehabilitation of a loan on which a judgment has been obtained optional for the loan holder because they saw instances where providing some of the benefits of rehabilitation to certain borrowers could increase debt recovery and allow borrowers to rectify the past default. We noted that there was no statutory basis for providing a loan holder the option of offering rehabilitation to some borrowers against whom the holder had a judgment and not to others. However, we suggested that there were options that holders could consider to permit them to work with borrowers against whom they had a judgment in ways that could increase collections on defaulted loans and provide borrowers in default with some benefits as an incentive to make payments on their debt.

Prior to this rulemaking process, the regulations allowed borrowers against whom a judgment has been issued on a Title IV loan the same opportunity for rehabilitation of the loan as any other defaulted borrower. However, after considering the negative effects of this policy cited by the Perkins schools, we noted that neither of the statutory sections creating the rehabilitation program (Section 428F of the HEA for the FFEL and the Direct Loan programs and section 464(h) of the HEA for the Perkins Loan Program) specifically require that rehabilitation be offered to borrowers against whom there is a judgment. We also considered statistical information we received from some Perkins Loan lenders showing that rehabilitation was not generally effective for borrowers against whom the lender had obtained judgments. Based on these considerations we decided that it was appropriate to change the regulations to provide more flexibility to schools and other loan holders in developing repayment arrangements with individual debtors, by eliminating loans on which a judgment has been obtained from the scope of the rehabilitation programs.

Although the proposed regulations exclude a loan on which a judgment has been obtained from being rehabilitated, the proposed regulations would provide that a loan holder may, at its option, enter into an agreement with a borrower against whom it had obtained a judgment. For example, an agreement could include a commitment from the holder that if the borrower made 12 consecutive monthly payments and then signed a new promissory note, the holder would vacate the judgment and request that the default be removed from the debtor's credit history. Under such an agreement, the borrower in default would receive many of the benefits of rehabilitation but, as opposed to the current regulations, the loan holder would have more flexibility to define the terms of the repayment agreement and to maximize the recovery of the debt from the defaulted borrower.

Some negotiators were concerned that borrowers with a judgment against them would not only be excluded from the benefits of rehabilitation, but would also be unable to receive other benefits of the Title IV programs. In particular, these negotiators were concerned that the borrower against whom there is a judgment would be unable to regain eligibility for additional Title IV aid, and would be ineligible for the discharge of the loan obligation under various statutory provisions unless the judgment had been fully satisfied.

In the case of a borrower regaining eligibility, the proposed changes to § 668.35 allow a borrower who is subject to a judgment obtained on a defaulted Title IV loan the opportunity to regain eligibility. However, we propose to modify the current rules under which a judgment debtor may regain eligibility to provide schools and guarantors with greater flexibility to recover loans on which a judgment has been obtained. The negotiators agreed on new provisions that allow the loan holder to determine what terms must be satisfied for a judgment debtor to regain eligibility for Title IV aid, as long as those arrangements include the making of at least six consecutive monthly payments.

On the issue of other benefits, we explained to the negotiators that these proposed regulations address rehabilitation and eligibility for additional Title IV aid and not any other aspect of the programs. Accordingly, the proposed regulations would not affect a borrower's eligibility for other Title IV loan benefits.

After these clarifications were made, the negotiators reached agreement on the proposed changes.

Retention of Promissory Notes (Sections 674.19, 682.402, and 682.414)

Current Regulations: The FFEL Program regulations include a provision that allows lenders and guaranty agencies to store a promissory note electronically only under certain circumstances. There is no corresponding regulation in the Perkins Loan Program.

Suggested Change: FFEL loan holders requested clarification of the technical change that was made to the regulations in June 2001 that was related to the retention of promissory notes that were signed electronically. We suggested that the Perkins Loan regulations should also include a provision concerning the retention of promissory notes that were signed electronically.

Proposed Regulations: The proposed regulations state that if a promissory note was signed electronically it must be stored electronically in accordance with the record retention requirements of § 668.24(d)(3)(i) through (iv).

Reason: The committee agreed to the proposed change to the FFEL Program regulations to make clear that promissory notes that were signed electronically must be maintained electronically in accordance with the record retention requirements of 34 CFR 668.24(d)(3)(i) through (iv). The committee also agreed to add similar

language to the Perkins Loan Program regulations.

Economic Hardship Deferments (Sections 674.34, 682.210, and by Reference 685.204)

Current Regulations: Some borrowers of loans made under the FFEL, Direct Loan, or Perkins Loan programs are eligible to receive a deferment of the obligation to make payments for up to three years if the borrower is unable to make payments because of an economic hardship. Under current regulations, borrowers may qualify for an economic hardship deferment if they have an educational debt to income ratio that is higher than a specified percentage. When calculating a borrower's educational debt burden, the loan holder must consider the borrower's monthly payments on all Federal postsecondary education loans. Current regulations for all three Title IV student loan programs require that the monthly payment amount be based on what the payment would be if the borrower were repaying the loan over a 10 year period from the date the borrower entered repayment, regardless of the length of the borrower's actual repayment schedule or the borrower's actual monthly payment amount.

Suggested Change: Initially, we suggested that the regulations be changed so that the borrower's actual monthly payment amount would be used to determine eligibility for an economic hardship deferment. This change was suggested because many Perkins Loan borrowers repay their loans in less than 10 years. Using a 10-year repayment schedule results in a monthly payment amount that is less than what the borrower is actually paying each month, and as a result, the borrower may not qualify for an economic hardship deferment. During the committee's preliminary discussion of this suggested change, a non-Federal negotiator suggested that corresponding changes be made to the regulations governing economic hardship deferments in the FFEL and Direct Loan programs.

Proposed Regulations: The proposed regulations would change the monthly payment amount that loan holders must use to calculate a Perkins, FFEL, or Direct Loan program borrower's monthly educational loan payment burden in determining whether the borrower qualifies for an economic hardship deferment. Specifically, the proposed regulations would require a school for the Perkins Loan Program, an FFEL Program loan holder, or the Secretary to use the borrower's actual monthly payment amount if the loan is scheduled to be repaid in 10 years or less, or a monthly payment amount based on a 10-year repayment schedule if the borrower's actual repayment schedule is more than 10 years.

Reason: The proposed regulations would allow a borrower to receive an economic hardship deferment more easily. Borrowers in all three programs whose repayment schedules are less than 10 years in length would no longer be penalized by the required use of a monthly payment amount that is less than their actual monthly payment amount. The FFEL and Direct Loan programs provide for repayment plans of more than 10 years. FFEL and Direct Loan borrowers whose repayment schedules are more than 10 years in length would continue to benefit by having the monthly payment amount based on a 10-year repayment schedule.

Initial and Exit Counseling (Sections 674.42, 682.604, and 685.304)

Current Regulations: Current regulations require that schools provide initial counseling to students who are borrowing under the FFEL or Direct Loan programs for the first time. While the Perkins Loan Program does not have specific initial counseling regulations, Perkins schools are required to provide certain information to borrowers prior to making the first disbursement of a loan. The regulations also require schools to provide exit counseling to students who have borrowed from any of the three Title IV student loan programs. Further, someone familiar with the Title IV student aid programs must be reasonably available to answer the borrowers' questions following both entrance and exit counseling.

The current Perkins, FFEL, and Direct Loan program counseling regulations require that schools provide the counseling to borrowers at specific times and under specific conditions. The current regulations also specify information that must be disclosed to borrowers through the counseling.

Suggested Change: It was suggested that the Perkins Loan, FFEL, and Direct Loan program counseling regulations be revised to clarify that a party other than a school may provide counseling to borrowers on a school's behalf. This change was suggested to make the regulations consistent with longstanding Departmental guidance that allows a school to arrange for another party to provide counseling to the school's borrowers as long as the school ensured that the counseling was provided and that it included all of the necessary information. It was also suggested that the current Perkins Loan, FFEL, and Direct Loan program counseling regulations be revised so that the information that must be disclosed to borrowers through counseling would be consistent across all three programs.

Proposed Regulations: The proposed regulations would clarify that, for initial counseling under the FFEL and Direct Loan programs and for exit counseling under all three loan programs, the school need not provide the counseling but must ensure that it is provided, that it includes all of the required information, and that someone familiar with the Title IV student aid programs be available to answer students' questions following the counseling.

We are not proposing changes to the Perkins Loan Program regulations governing the information that a school must provide to a borrower prior to making the first disbursement of a loan.

As suggested, the proposed regulations would establish consistency across all three programs in the information that is required to be covered during counseling. When reviewing the counseling regulations for consistency, the committee noted that while the current Direct Loan Program regulations require the disclosure of average and anticipated indebtedness information, the FFEL Program regulations do not. After discussing the feasibility of schools providing this information, we modified the Direct Loan language to require only disclosure of average anticipated repayment amounts and added the same language to the FFEL regulations.

We also proposed that schools provide borrowers with information about the availability of the Department's National Student Loan Data System (NSLDS).

Reason: The proposed changes were made to reflect our long-standing guidance that a party other than the school may provide counseling to borrowers on a school's behalf. We modified the Direct Loan regulations and added to the FFEL regulations the requirement that schools, during exit counseling, provide borrowers with information about average monthly repayment amounts so that the borrowers will be better informed about their upcoming student loan repayment obligations.

Finally, the negotiators agreed that it is important for borrowers to be informed that they may access NSLDS to review information about all of their Title IV student loans.

FFEL and Direct Loan—Loan Limits (Sections 682.204 and 685.203)

Current Regulations: The current FFEL and Direct Loan program regulations specify maximum annual

loan limits for undergraduate students based on the number of years of an undergraduate program that the student has successfully completed.

Suggested Change: In light of questions that have arisen over the past several years, we proposed that the regulations clarify that a school may not link separate, stand-alone programs to allow students to be eligible for higher annual loan limits.

Proposed Regulations: The proposed regulations would specify that a student who is enrolled in a program that is one academic year or less in length is subject to the annual loan limits that apply to first-year undergraduates, and that a student who is enrolled in a program that is more than one academic year in length is subject to the first- and second-year annual loan limits for the first two years of that program. For example, if a school offers programs ''A'' and ''B,'' each of which is one academic year in length, and the school requires students to have completed program ''A'' as a prerequisite for admission into program ''B,'' students may not borrow at the second-year undergraduate level for program ''B'' based on the fact that they successfully completed program ''A.'' Similarly, if a school offers a program that is two academic years in length, and requires students to have completed a separate one-year program as a prerequisite for admission into the two-year program, it may not consider the first and second years of that program to be the second and third years of an undergraduate program for loan limit purposes.

These proposed regulations do not affect the special statutory rule reflected in §§ 682.204 and 685.203 that allows a borrower, who has received an associate or baccalaureate degree and who enrolls in a new program for which such a degree is required, to borrow up to the higher annual loan limits that apply to borrowers who have successfully completed the first and second years of an undergraduate program. The proposed regulations also do not restrict an institution from determining the number of years a borrower has completed based on hours earned at another institution that are applicable to the program at the new institution.

Reason: For program integrity reasons, we believe that it is important to clearly state that, except as provided in the HEA, a school may not allow a student to qualify for higher annual loan limits based on prior completion of one or more years of study in a program other than the one in which the student is currently enrolled.

FFEL—Unemployment Deferment (Sections 682.210 and by reference 685.204)

Current Regulations: For any unemployment deferment period beyond the initial period granted by the lender, the FFEL regulations, and by reference the Direct Loan regulations, require a borrower who does not qualify for an unemployment deferment based on evidence of eligibility for unemployment benefits to provide the lender with a written certification describing the borrower's diligent search for full-time employment during the preceding six months. The regulations require the borrower to submit specific information about these attempts to gain employment, including the name of the employer contacted and the employer's address and telephone number or other information acceptable to the holder, showing that the borrower made at least six diligent attempts to gain employment. For both initial and subsequent deferment requests, the regulations further require that a borrower who does not qualify based on evidence of eligibility for unemployment benefits affirm in a written certification that he or she has registered with a public or private employment agency, if one is within a 50-mile radius of the borrower's permanent or temporary address, and provide the agency's name, address, and the date the borrower registered with the agency.

Suggested Change: FFEL Program participants suggested revising the regulations governing unemployment deferments to simplify the process for those borrowers who do not qualify based on their eligibility for unemployment benefits. They stated that the regulations should be changed to simplify the information required to support the borrower's written certification that he or she has searched for full-time employment. They believed that allowing the borrower to certify to the diligent employment search and registration with an employment agency without providing additional information about the specific contacts was sufficient, given that the borrower's application for the deferment was certified under penalty of perjury. They also believed that this streamlined process was consistent with the fact that, given technological changes, a search for employment may be conducted in different ways and may not always involve direct contact with a particular person at an employer.

The negotiators representing FFEL Program lenders, servicers, and guarantors suggested eliminating the requirement for a written certification from the borrower confirming his or her diligent search for full-time employment. They supported their request by citing changes in the procedures used to apply for State unemployment benefits which now include certain oral and automated processes.

With regard to the certification of registration with an employment agency, the non-federal negotiators suggested that the 50-mile radius be based on where the borrower is currently residing rather than the borrower's permanent or other address that may no longer be relevant to the borrower's job search.

Proposed Regulations: The proposed regulations would provide that a borrower may qualify for an unemployment deferment beyond the initial unemployment deferment period by providing a written certification, or an equivalent as approved by the Secretary, that the borrower has made at least six diligent attempts during the preceding six-month period to secure full-time employment, without providing the details of those contacts. Similarly, the proposed regulations would allow the borrower to certify, if required, that he or she has registered with a local employment agency without providing the details of the registration. Finally, the proposed regulations also provide that the 50-mile radius requirement for registration with an employment agency be based on the borrower's current address.

As we have previously stated, as a general rule, the term ''written certification'' also includes electronically submitted certifications. Given technological or other developments, the Secretary may, in the future, approve other methods of submission that are equivalent to a written certification as long as such methods protect the integrity of the programs.

Reason: The negotiators believed that these proposed changes to the unemployment deferment regulations were appropriate for the reasons discussed above.

FFEL and Direct Loan—Consolidation Loan Benefits (Sections 682.402, 685.212, and 685.220)

Current Regulations: Under current regulations in the FFEL and Direct Loan programs, if a borrower meets the requirements for a loan discharge based on school closure, false certification, or unpaid refund on one or more of the loans that were repaid by a consolidation loan, but does not qualify for discharge on other loans that were

consolidated, the borrower may receive a partial discharge of the consolidation loan. However, the current regulations do not allow a borrower to receive a partial discharge of a consolidation loan based on a total and permanent disability. To receive a discharge of a consolidation loan based upon a total and permanent disability, the borrower must meet the conditions for a total and permanent disability discharge on all of the loans that were consolidated.

The current regulations provide for the discharge of a PLUS loan if the student on whose behalf the loan was obtained dies. However, if a parent borrower consolidates a PLUS loan and the student for whom that loan was obtained dies, a discharge of the portion of the consolidation loan attributable to that PLUS loan is not available.

In general, the current FFEL and Direct Loan program regulations provide for discharge of a joint consolidation loan only if each borrower meets the requirements for a loan discharge. There is an exception to this rule only for discharges based on school closure, false certification, or an unpaid refund. If one borrower meets the requirements for one of those discharges on a loan that was consolidated into a joint consolidation loan, but the other borrower does not qualify for any type of discharge, the regulations provide for a partial discharge of the joint consolidation loan.

Suggested Change: Some FFEL Program participants suggested that the regulations be modified to allow for the partial discharge of a consolidation loan if a borrower meets the requirements for discharge due to total and permanent disability on one or more, but not all, of the loans that were consolidated.

It was also suggested that the regulations be changed so that a parent borrower would qualify for a partial discharge of a consolidation loan if the consolidation loan repaid a PLUS loan obtained for a student who died.

We also suggested that the provisions for partial discharge of a joint consolidation loan be extended to cover cases in which one of the borrowers dies or becomes totally and permanently disabled, but the other borrower does not qualify for any type of discharge.

Proposed Regulations: The proposed regulations would specify that, if a consolidation loan repaid a PLUS loan obtained for a student who died, the portion of the consolidation loan attributable to that PLUS loan will be discharged. They would also provide for the discharge of the applicable portion of a joint consolidation loan if one of the borrowers dies or becomes totally and permanently disabled.

The proposed changes to § 685.220(l) of the Direct Loan Program regulations include new language stating that a joint Direct Consolidation Loan may be partially discharged if one of the borrowers qualifies for forgiveness under the teacher loan forgiveness program. The proposed change to the Direct Loan regulations would merely clarify current policy and provide for a more complete set of cross-references to the loan discharge types covered in § 685.212 of the regulations. Because the construction of the FFEL regulations currently provides for the partial discharge of a joint consolidation loan in this situation a change is not needed in the FFEL regulations.

Reasons: We declined to accept the suggested change that would allow for the partial discharge of a consolidation loan based on a total and permanent disability when a borrower meets the requirements for discharge on some, but not all, of the loans that were consolidated. The only way that some, but not all, of a borrower's consolidated loans could be eligible for a disability discharge would be if the ineligible loans were made after the date the borrower became totally and permanently disabled. This means that the borrower was no longer totally and permanently disabled and therefore not eligible for a discharge on any of the loans. The other negotiators agreed with our decision. We suggested the other changes described above because we believe that borrowers should be permitted to receive discharges that they would have qualified for if they had not consolidated their loans. The proposed changes are consistent with current regulations that allow partial discharge of consolidation loans due to school closure, false certification, and unpaid refunds.

Perkins Loan Program Changes

Federal Perkins Loan—Master Promissory Note (Sections 674.2 and 674.16)

Current Regulations: In § 674.2, the term ''Making of a loan'' is defined as when the borrower signs a promissory note for each award year and the institution makes the first disbursement of loan funds under that promissory note for that award year. The regulations do not define or provide for the use of a Master Promissory Note (MPN) in the Perkins Loan Program.

Under § 674.16(d)(2), the institution must obtain the borrower's signature on a promissory note for each award year before disbursing loan funds to the borrower under that note for that award year.

Suggested Change: To provide for the use of an MPN in the Federal Perkins Loan Program, we suggested that revisions were needed to the current definition of ''Making of a loan'' and that the regulations needed a specific definition of the term ''Master Promissory Note (MPN)''.

In addition, § 674.16(d)(2) needs to be amended to eliminate the regulatory requirement that a Perkins Loan borrower sign a promissory note for each award year. Finally, the regulations need to clearly state the conditions under which the ability of an institution to make Perkins loans under an MPN expires.

Proposed Regulations: The proposed regulations would modify the definition of ''Making a loan'' and add a definition for the term ''Master Promissory Note (MPN)''. They would also modify the requirements of § 674.16(d)(2) to be consistent with the use of an MPN in the Perkins Loan Program.

Proposed § 674.16 would require the institution to ensure that each loan is supported by a legally enforceable promissory note while eliminating the requirement for a new note for each award year. In addition, a new paragraph would be added to this section to state the conditions under which the Perkins Loan MPN would expire.

Reason: The adoption of an MPN in the Perkins Loan Program will simplify the loan process by eliminating the need for institutions to prepare, and students to sign, a promissory note each award year. The use of the MPN will reduce burden on both students and institutions and will ensure consistency across the three Title IV loan programs. The proposed changes to the Perkins Loan Program regulations are based on existing regulations for MPNs in the FFEL and Direct Loan programs.

During the negotiations, the negotiator representing State PIRGs expressed concern that the implementation of an MPN in the Perkins program might result in a student incurring additional debt without his or her knowledge. After additional discussion, that negotiator chose, with respect to this issue, to invoke the provision of the committee's protocols that allows one coalition partner to dissent on an issue while the rest of the coalition consents to it. Therefore, our suggestion to introduce an MPN in the Perkins Loan Program and the proposed supporting regulatory changes were both endorsed by the negotiating committee.

Federal Perkins Loan—Write-Offs (Sections 674.9 and 674.47)

Current Regulations: Current regulations in § 674.9 require a borrower who has a Perkins Loan, a National Direct Student Loan, (NDSL), or a National Defense Student Loan written off to reaffirm that debt in order to receive a new Perkins Loan. Reaffirmation is not required if the amount written off is $25 or less.

Current § 674.47(g) provides that an institution may cease collection activity on a defaulted account with a balance of less than $25 if the borrower has been billed for this balance in accordance with the regulations. The regulations further state that an institution may cease collection activity on a defaulted account with a balance of less than $200 if the institution has carried out the due diligence procedures required by the regulations and if the account has had no payment activity for at least four years. Under current § 674.47(h), an institution may write off an account with a balance of less than $5.

Suggested Change: Members of organizations representing Perkins Loan schools suggested that the current $5 Perkins ''write-off'' limit be raised to at least $25.

Proposed Regulations: The proposed regulations would amend § 674.47 (g) and (h) to provide increased flexibility to schools to write-off a low balance on a Perkins Loan account. Specifically, the proposed changes maintain the current provision that a school may cease collection activity on a defaulted Perkins Loan account of less than $200 if, for a period of four years, the institution has complied with the due diligence procedures of subpart C of the Perkins Loan regulations and the borrower has not made any payments or otherwise agreed to repay the loan.

The proposed changes would also allow an institution to write off account balances of less than $25, and if the borrower has been billed for at least two years, balances of less than $50.

The proposed regulation would also add new language making it clear that a borrower whose balance has been written off is relieved of all repayment obligations. Finally, a conforming change is proposed that would remove the requirement that a borrower must reaffirm a loan that was previously written off.

Reason: We believe that the changes approved by the negotiating committee will reduce costs and administrative burden at Perkins Loans schools.

Perkins Loan—Transfer of Loan Fund (Section 674.17)

Current Regulations: When an institution responsible for a Perkins Loan fund closes or ceases to participate in the Perkins Loan Program, it must take specific steps to protect the outstanding loans and the Federal interest in the loan fund. Under the current regulations, one of the options available to such an institution is to transfer any outstanding loans to another institution if directed to do so by the Secretary.

Suggested Change: We suggested that the regulations be changed to eliminate the option of the Secretary to direct a Perkins Loan institution to transfer its outstanding loans to another institution. We have determined that this is not an appropriate action to take if a Perkins Loan institution closes, or otherwise ends its participation in the program.

Proposed Regulations: The proposed change to § 674.17 would eliminate the provision allowing an institution to transfer its Perkins loan portfolio to another institution at the direction of the Secretary.

Reason: Several years ago, the Secretary administratively discontinued the practice of directing an institution that closes or otherwise ends its participation in the Perkins Loan Program to transfer its outstanding Perkins loans to another institution. The proposed change to the regulations will reflect that policy and clarify that assignment of Perkins loans to the Secretary is the only option available.

Federal Perkins Loan—Borrower Repayment (Sections 674.33 and 674.42)

Current Regulations: The current regulations require an institution that chooses to implement the minimum monthly payment option for a Perkins loan borrower to coordinate that minimum monthly payment with any other institution from which the borrower has received Perkins loans.

Suggested Change: Organizations that represent schools that participate in the Perkins Loan Program suggested that the regulations be modified to specify that an institution is required to coordinate minimum monthly repayment amounts with other institutions only if the borrower requests such coordination.

Proposed Regulations: Under § 674.33 of the proposed regulations, an institution would be required to coordinate a borrower's monthly payments with other institutions only if the borrower informs the institution that he or she wants the minimum monthly repayment determination to be based on payments due to other institutions.

We are also proposing to amend § 674.42 to require the institution to inform borrowers during exit counseling that they request coordination of monthly payments.

Reason: Many institutions participating in the Perkins Loan Program are not able to coordinate a borrower's minimum monthly payment amount with other institutions because they are unaware that the borrower has other Perkins loan debt. To address this concern, the negotiators agreed to require an institution to coordinate minimum monthly repayments with other institutions only if the borrower requests such coordination.

To ensure that borrowers who have loans at other institutions are aware that they must ask the institution to coordinate with other institutions in establishing the minimum payment amount, the proposed regulations would add a requirement in § 674.42 that institutions inform borrowers of the minimum repayment coordination provision.

Perkins Loan—Copies of Promissory Notes (Section 674.42)

Current Regulations: The Perkins Loan Program regulations provide that institutions must disclose critical repayment information to a Perkins loan borrower in a written statement either before the borrower ceases at least half-time study or during the exit interview. As part of the disclosure requirements, the institution must provide the borrower with a copy of the borrower's signed promissory note.

Suggested Change: Organizations that represent Perkins Loan schools suggested that the regulations be revised to require an institution to provide a copy of the signed promissory note to the borrower only at the borrower's request.

Proposed Regulations: The proposed regulations would eliminate the requirement that the school provide the borrower with a copy of his or her signed promissory note. Instead, the institution would be required, as part of its repayment information disclosure or during the exit interview, to inform each borrower that a copy of the promissory note will be provided upon request and provide each borrower with contact information that will allow the borrower to make such a request.

Reason: Many institutions give borrowers a copy of their signed promissory notes before the borrowers leave school, often when the note is first signed. The proposed change decreases the cost and burden of providing duplicate promissory notes for the school but preserves the borrower's

right to easily secure a copy of the signed promissory note.

Perkins Loan—Late Charges (Section 674.43)

Current Regulations: For Perkins Loans made for periods of enrollment beginning on or after January 1, 1986, institutions are required to impose a late charge if a borrower's payment is overdue.

Suggested Change: Organizations representing schools participating in the Perkins Loan Program suggested that the assessment of late charges in the Perkins Loan Program should be made optional for the school rather than mandatory.

Proposed Regulations: The proposed regulations would amend § 674.43(b)(2) by allowing the school the option of assessing late charges in the Perkins Loan Program. Consistent with current regulations, an institution that adopts a policy of assessing late charges would be required to impose them on all borrowers with overdue payments. The rules for the calculation and application of late charges would remain as specified in the regulations at § 674.43(b)(2)(iii).

Reason: Making the assessment of late charges optional would allow the charge to serve as a more effective collection tool and would reduce administrative burden on institutions.

Perkins Loan—Credit Bureau Reporting (Section 674.45)

Current Regulations: The current regulations under § 674.16 require an institution to report to at least one national credit bureau the amount and disbursement date of a loan and information concerning the repayment and collection of the loan until the loan is paid in full. This requirement must be disclosed to the borrower under § 674.31. Further, § 674.45(a)(1) requires an institution to report a defaulted loan account to a national credit bureau when a borrower has not responded satisfactorily to the final demand letter or the following telephone contact.

Suggested Change: Committee members representing Perkins Loan schools suggested that the regulations clarify when a borrower's default status is to be reported to a national credit bureau.

Proposed Regulations: We are proposing to revise the provisions governing credit bureau reporting in § 674.45(a)(1) to clarify that the institution must report an account as being in default to a national credit bureau as part of the collection procedures it is required to follow when a defaulted borrower does not respond satisfactorily to the institution's billing procedures under § 674.43.

Reason: Some negotiators felt that the current regulations did not clearly state when a borrower's default must be reported to a national credit bureau. The proposed change is intended to eliminate any confusion that exists from the current regulations.

Perkins Loan—Litigation (Section 674.46)

Current Regulations: Current regulations require institutions to review accounts for litigation at least annually if certain collection efforts set forth in § 674.45 do not result in repayment of the loan. The regulations require the school to, among other things, assess whether the total amount owed, including the outstanding principal, interest, collection costs and late charges, on all the borrower's Perkins loans at the institution is more than $200 and whether it would be cost effective for the institution to litigate the account and sue the borrower. If the institution determines, based upon its annual review, that the required conditions are met, it must sue to recover the debt and all litigation costs from the borrower.

Institutions may bring suit against a defaulted borrower even if the conditions included in the regulation are not met.

Suggested Change: Schools participating in the Perkins Loan Program requested that they be allowed more discretion when reviewing overdue accounts for litigation, and that the current litigation threshold amount be raised from $200 to $1000.

Proposed Regulations: Two specific changes are proposed for § 674.46. The first change would require institutions to review accounts for litigation once every two years, rather than every year. The second change would increase from $200 to $500 the amount that the institution must use to determine if it must litigate.

Reason: The proposal to review accounts for litigation less frequently than annually was recommended by some non-Federal negotiators to reduce the costs and administrative burden associated with conducting these reviews. These non-Federal negotiators stated that their experience shows that two of the factors used to support a decision to litigate, the borrower's assets and income, do not significantly change in the short time between annual reviews.

Several non-Federal negotiators stated that given the costs of litigation, it is not cost-effective to pursue small dollar accounts and recommended that the minimum dollar amount be increased to $700. Other negotiators recommended raising the litigation threshold to $1000. Based upon average loan balance data from NSLDS and our concern that the majority of these accounts should remain subject to litigation as the final due diligence effort, the negotiators agreed to increase the litigation threshold amount from $200 to $500.

Perkins Loan—Assignment of Loans (Section 674.50)

Current Regulations: Current regulations provide that the Secretary does not accept assignment of a loan if the loan has been cancelled due to the death or total and permanent disability of the borrower. They also require an institution to reimburse its Perkins Loan fund for the entire portion of the outstanding balance on a loan that has been determined by the Secretary to be unenforceable because of an act or omission of the institution or its–agent.

Suggested Change: The regulations need to be revised to be consistent with the regulatory requirement that an institution assign a Perkins Loan to the Secretary if the institution has made a preliminary determination that the borrower may qualify for a discharge based on a total and permanent disability. This change conforms the rules on assignment with the revised procedures for handling applications for discharges based on total and permanent disability which became effective July 1, 2002.

In addition, the regulations must be modified to conform to earlier changes that, instead of requiring reimbursement from an institution for loans deemed to be unenforceable, provide that the Secretary may require reimbursement.

Proposed Regulations: The proposed regulations would eliminate the provision in § 674.50(e)(4) that states that the Secretary does not accept assignments in cases where the loan was cancelled due to death or total and permanent disability. The proposed change to § 674.50(g)(2) would make it optional for the Secretary to require an institution to reimburse the Perkins Loan fund if an assigned loan is unenforceable because of an act or omission by the institution.

Reason: Effective July 1, 2002, under the new disability discharge requirements, when a Perkins Loan school makes a preliminary determination that a borrower is eligible for a discharge of his or her loan obligation, it must assign the loan to the Secretary for further action. The proposed change would also delete references to the assignment of loans after the institution has discharged the

loan due to death. By definition, once a loan has been discharged because of the borrower's death, there is no loan to assign.

The proposed change to § 674.50(g) conforms to an earlier change made in § 674.13, which provides the Secretary with the discretion to determine the circumstances under which reimbursement to the institution's Perkins Loan fund would be appropriate.

FFEL Program Changes

FFEL—Definition of Lender (Section 682.200)

Current Regulations: The current definition of lender in the FFEL Program regulations reflects the statutory restriction that a bank, savings and loan, or credit union which acts as a lender in the program not have the making or holding of student loans as its primary consumer credit function. The regulations provide that to be an eligible lender, a bank, savings and loan, or credit union may not hold FFEL Program loans at any time that total more than one-half of its combined consumer credit loan portfolio. In the case of a bank holding company, the company's wholly-owned subsidiaries as a group may not hold FFEL Program loans at any time that total more than one-half of the subsidiaries' combined consumer credit loan portfolios.

Suggested Change: Organizations representing FFEL lenders suggested that the definition of the term ''lender'' be revised to make clear that loans held in trust are not considered part of the trustee lender's consumer credit loan function in determining whether the lender has exceeded the limit of one-half of the lender's combined consumer credit loan portfolio. In addition, in a report titled ''Trustee Arrangements Serve Useful Purposes in Student Loan Market'' (GAO/HEHS–00–170) issued in September 2000, the General Accounting Office (GAO) recommended that we clarify how loans held by a trustee are treated for purposes of the limit on the percentage of a lender's consumer credit loan portfolio may be in student loans. The GAO report did not recommend a particular approach but only recommended that we clarify the application of the rule.

Proposed Regulations: The proposed regulations would add a new sentence to the definition of eligible lender that specifies that loans held in trust by a trustee lender are not part of the trustee lender's consumer credit loan function.

Reason: This change to the regulations is proposed so that eligible lenders will not be discouraged from serving as trustees for other lenders. A lender's trust department is generally separate from its own student loan department and its other consumer credit functions. Based on this factor, we have determined that including loans held in trust in the calculation of a lender's consumer credit loan portfolio may not give an accurate picture of the extent of the lender's consumer credit function that is represented by the lender's own student loan business. Loans held in trust will be considered instead to be part of the consumer credit function of the beneficial holder of the trust.

FFEL—Repayment Requirements (Section 682.209)

Current Regulations: Section 682.209 of the FFEL regulations provides that a lender must establish a first payment due date for a Stafford Loan that is not later than 45 days after the borrower's repayment period begins. It also provides that a lender must determine the beginning of the repayment period by using the date that the borrower was no longer enrolled in school, usually as provided by the school. Finally, the regulations provide that a borrower may orally request a repayment period that is less than the minimum 5-year period provided by the HEA, but may only extend the repayment period back to the minimum 5-year period only by a written notice to the lender.

Suggested Change: FFEL loan holders suggested that § 682.209 be amended in three ways. First they suggested that lenders be allowed to establish a first payment due date for a Stafford Loan that is not later than 60 days after the borrower's repayment period begins, rather than not later than 45 days after the borrower enters repayment. Second, they wanted the regulations to be changed to reflect non-regulatory guidance issued by the Department that provided that a lender would not be required to recalculate the start of the borrower's repayment period based on a new enrollment status date received from a school if the new date is in the same month and year as the date previously reported by the school. Finally, they suggested that the regulatory requirement that a borrower's notice to the loan holder to change a shorter repayment period to the minimum 5-year period be in writing be removed.

Proposed Regulations: The proposed regulations would change the lender's timeframe for establishing a first payment due date for a Stafford Loan borrower who enters initial repayment or reenters repayment at the conclusion of a deferment or forbearance, from 45 days to 60 days after the borrower's repayment begins or resumes.

The proposed regulations would also codify existing Departmental guidance by providing that if a lender receives a revised enrollment status date from a school after it has already provided the borrower with required repayment disclosures, and the new date is within the same month and year as the one previously reported, it may use the previously reported date.

Finally, the proposed regulations would remove the requirement that a borrower who previously asked to repay a loan in less than five years provide a written notice to the lender if the borrower now wishes to extend the repayment to a minimum of five years.

Reason: FFEL Program lenders and servicers requested the change in the lender's deadline to establish the first payment due date for Stafford Loan borrowers to provide consistency with similar timeframes that are currently in the regulations for other loans. Consistency in these timeframes reduces system complexity and administrative costs and provides borrowers with additional time after entering repayment to make the first scheduled payment.

FFEL participants cited existing Departmental guidance as the basis for their request that they be allowed to use a previously reported enrollment status change date if a new date reported by a school is within the same month and year. While their proposal would have allowed the use of the first date without regard to whether the lender had provided the borrower with repayment materials, the negotiators ultimately agreed to the proposal with the limitation that the lender could ignore the revised date submitted by the school only if it had already provided the borrower with the repayment disclosure materials.

Finally, to facilitate a borrower's ability to revise his or her repayment schedule quickly and easily from the less than five-year minimum repayment that the borrower previously requested and agreed to, the negotiators supported dropping the requirement that the borrower notify the lender in writing.

FFEL—Forbearance (Section 682.211)

Current Regulations: The lender and the borrower (or endorser, if applicable) must agree in writing to the terms of a discretionary forbearance and to some mandatory forbearances. If a forbearance involves the postponement of all payments, the lender must notify the borrower or endorser at least once every 3 months to remind the borrower or endorser of the continuing obligation to repay the loan. One of the discretionary

administrative forbearances that lenders may grant is for a period of up to 3 months for a borrower who is affected by a natural disaster.

Suggested Change: Members of the FFEL community requested that the regulations be changed, to the extent permitted by the statute, to eliminate the requirement that the borrower or endorser agree in writing to the terms of the forbearance. They also asked that the frequency of notice to a borrower in forbearance be decreased from once every three months to once every six months. Finally, some FFEL participants requested that the regulations be changed to permit a lender, without the Secretary's approval, to grant a discretionary forbearance for a period of up to three months to a borrower whose ability to make payments has been adversely affected by a local or national emergency.

Proposed Regulations: The proposed regulations would allow a lender to grant a discretionary forbearance without a written agreement. If the agreement is not in writing, the lender must send the borrower or endorser a notice confirming the terms of the forbearance agreement within 30 days of the agreement.

The proposed regulations would also reduce the frequency with which a lender must contact a borrower who has been granted a forbearance from once every three months to once every six months. In addition, the proposed regulations would specify that the information the lender provides to the borrower about the status of the debt must include: A statement that the borrower continues to have the outstanding obligation to repay the loan, the amount of the unpaid principal balance and any unpaid interest that has accrued on the loan, the fact that interest will accrue on the loan for the full term of the forbearance, and the fact that the borrower may discontinue the forbearance at any time.

Finally, the proposed regulations would authorize the lender to grant a discretionary administrative forbearance if the borrower's ability to repay is adversely impacted by a natural disaster, a local or national emergency as declared by the appropriate government agency, or a military mobilization.

Reason: The negotiators agreed that a lender should be able to address the needs of borrowers who are having difficulty making payments by granting forbearances without a written forbearance agreement, perhaps as part of a telephone conversation with the borrower. However, because a forbearance agreement amends the repayment terms of the loan, and in some cases could result in increased costs to the borrower, an oral agreement must be followed with a written notice to the borrower or endorser outlining the terms of the forbearance. That notice must be provided within 30 days of the oral agreement.

The negotiators also agreed to change the time between required lender contacts with borrowers in a forbearance from three to six months as long as there also was a requirement that the notification(s) to the borrower include the information noted above.

To ensure that lenders can react quickly during natural disasters, local or national emergencies, and military mobilizations to temporarily relieve borrowers of their repayment obligations without having to contact them first, the proposed regulations would authorize lenders to grant a discretionary administrative forbearance to borrowers for a limited three-month period until lenders can contact the borrowers and determine their ability to resume repayment.

FFEL—Sovereign Immunity (Section 682.402)

Current Regulations: When an FFEL lender receives notice that a borrower has filed a bankruptcy petition, it must, unless instructed otherwise by the guaranty agency, file a proof of claim with the court within a specified timeframe. Similarly, a guaranty agency is required to file a proof of claim on loans it holds.

Suggested Change: To ensure that the regulations do not interfere with a state guaranty agency's right to effectively invoke sovereign immunity as a defense to adversary proceedings seeking discharge or other relief brought in bankruptcy court on loans it holds or has guaranteed, we suggested that the regulations be amended to clearly provide such protection by clarifying that the agency may invoke its rights and may also instruct its lenders not to file a proof of claim.

Proposed Regulations: The proposed regulation would provide that a guaranty agency that is a State agency and does not assign to other guaranty agencies loans affected by bankruptcy filings is not required to file a proof of claim on loans it holds and may instruct lenders not to file proof of claims on loans that it guaranteed.

Reason: A State guaranty agency that has the protection of sovereign immunity should not be required to take actions, including either filing a proof of claim or accepting assignment of a proof of claim filed by another party, that may be viewed as waiving its sovereign immunity from suit in bankruptcy court. To avoid such contentions, a State guaranty agency should be allowed to instruct its lenders not to file claims.

A State guaranty agency that transfers to another guaranty agency any loans that it already holds as defaulted loans or any loans on which it has received a bankruptcy claim on the other hand, does not need this added protection. The strong public interest in recovering from the borrower any payments made available in the bankruptcy proceeding requires that this proposed change apply only to those State guaranty agencies that do not transfer to another guarantor any loans affected by a bankruptcy filing.

FFEL—Agency Review of Disability Claims (Section 682.402)

Current Regulations: A guaranty agency must pay an approved claim that is based upon a death, disability, or bankruptcy discharge within 45 days of receipt of the claim from the lender, and a claim that is based upon a closed school or false certification discharge within 90 days.

Suggested Change: A number of guaranty agencies suggested that agencies needed additional time to carefully review a claim submitted by a lender for a discharge based upon the total and permanent disability of the borrower. They commended that the regulations be changed to allow the agency up to 90 days to make the determination and, if approved, pay the claim to the lender.

Proposed Regulations: The proposed regulations would increase the time period in which a guaranty agency must pay a claim to a lender for a disability discharge from 45 days to 90 days.

Reason: The committee agreed with the suggestion for the reason stated above.

Direct Loan Program Changes

Definition of Default for Cohort Default Rate Calculations (Sections 668.183 and 668.193)

Current Regulations: When calculating a school's cohort default rate under the FFEL and Direct Loan programs, the denominator includes those borrowers whose loans entered repayment in the applicable fiscal year. Generally, the numerator includes borrowers from the denominator who defaulted on one or more loans before the end of the following fiscal year. However, the current regulations provide that certain non-defaulted Direct Loan borrowers also be included in the numerator. Specifically, the

regulations require the inclusion in the numerator of any borrower who received a Direct Loan from a proprietary, non-degree granting institution who has been repaying under the Direct Loan Program's income contingent repayment (ICR) plan for 360 days with scheduled payments less than 15 dollars per month and less than the amount of interest accruing on the loan.

Suggested Change: During the development of the negotiated rulemaking agenda, a non-Federal negotiator suggested changing the regulations to eliminate the current provision that includes in the numerator of the cohort default rate calculation the group of Direct Loan ICR borrowers discussed above. The non-Federal negotiator contended that the current regulations are unreasonable because they could result in a proprietary, non-degree-granting institution losing its eligibility to participate in the Title IV programs due to a cohort default rate based in part on borrowers who had met their repayment obligations and had not defaulted on their loans.

Proposed Regulations: The proposed regulations would make the suggested change. Borrowers included in a proprietary, non-degree-granting institution's cohort who have been repaying their loans under the Direct Loan Program's income-contingent repayment plan for 360 days with scheduled payments less than 15 dollars per month and less than the amount of interest accruing on the loan, would not be considered to be in default when calculating the institution's cohort default rate.

If the proposed regulations become final, the first official cohort default rates that would reflect the change would be the official rates for the 2001 fiscal year (FY 01) that the Secretary must publish by September 30, 2003. Therefore, to ensure consistency between the draft FY 01 cohort default rates and the official FY 01 cohort default rates, the Secretary plans to base the draft FY 01 cohort default rate calculation on the provisions of the revised regulations.

Reason: The change to the regulations that removes certain Direct Loan ICR borrowers from the numerator of a for-profit non-degree institution's cohort default rate calculation is proposed because such borrowers entered into ICR for a variety of valid reasons and are not in default. Thus, they should not be included in the calculation of an institution's cohort default rate.

Direct Loans—Expiration of Master Promissory Note (Section 685.102)

Current Regulations: Under current regulations, a Direct Loan Program Master Promissory Note (MPN) expires on the earliest of (1) the date the Secretary or the school receives the borrower's written notice that no additional loans may be disbursed under the MPN, (2) one year after the date of the first anticipated disbursement if no disbursement is made during that 12-month period, or (3) ten years after the date of the first anticipated disbursement.

Suggested Change: We suggested changing the current MPN expiration date rules so that instead of being based on the first anticipated disbursement date, the expiration date would be based on the signature or receipt date of the MPN.

Proposed Regulations: The proposed regulations would retain the current expiration date provisions for Direct Loan Program MPNs that are processed by the Secretary before July 1, 2003, and would establish new expiration date provisions for MPNs that are processed by the Secretary on or after July 1, 2003. Under the proposed provisions for MPNs that are processed by the Secretary on or after July 1, 2003, a Direct Loan Program MPN would expire on the earliest of (1) the date the Secretary or the school receives the borrower's written notice that no additional loans may be disbursed under the MPN, (2) one year after the date the borrower signed the MPN or the date the Secretary receives the MPN if no disbursements are made under that MPN, or (3) ten years after the date the borrower signed the MPN or the date the Secretary receives the MPN.

Reason: The implementation of the Common Origination and Disbursement (COD) System for processing Direct Loans provides the opportunity to make the Direct Loan Program MPN expiration date provisions more consistent with corresponding provisions under the FFEL Program. The FFEL Program provisions base the expiration date on the signature or receipt date of the MPN. The proposed change is also consistent with the MPN expiration date provisions for the Perkins Loan Program that are being proposed in this NPRM.

Executive Order 12866

1. Potential Costs and Benefits

Under Executive Order 12866, we have assessed the potential costs and benefits of this regulatory action.

The potential costs associated with the proposed regulations are those resulting from statutory requirements and those we have determined to be necessary for administering these programs effectively and efficiently. Elsewhere in this **SUPPLEMENTARY INFORMATION** section we identify and explain burdens specifically associated with information collection requirements. See the heading Paperwork Reduction Act of 1995.

In assessing the potential costs and benefits—both quantitative and qualitative—of this regulatory action, we have determined that the benefits would justify the costs.

We have also determined that this regulatory action would not unduly interfere with State, local, and tribal governments in the exercise of their governmental functions. Summary of potential costs and benefits

The Secretary is amending these regulations to reduce administrative burden for program participants, provide benefits to students and borrowers, and to protect the taxpayers' interests. The proposed regulations are fully described elsewhere in this preamble. The Department of Education has estimated that the proposed regulations would have no effect on Federal costs over FY 2002–2006.

2. Clarity of the Regulations

Executive Order 12866 and the Presidential Memorandum on ''Plain Language in Government Writing'' require each agency to write regulations that are easy to understand. The Secretary invites comments on how to make these proposed regulations easier to understand, including answers to questions such as the following:

- Are the requirements in the proposed regulations clearly stated?
- Do the proposed regulations contain technical terms or other wording that interferes with their clarity?
- Does the format of the proposed regulations (grouping and order of sections, use of headings, paragraphing, etc.) aid or reduce their clarity?
- Would the proposed regulations be easier to understand if we divided them into more (but shorter) sections? (A ''section'' is preceded by the symbol ''§ '' and a numbered heading; for example, § 682.209 Repayment of a loan.
- Could the description of the proposed regulations in the ''Supplementary Information'' section of this preamble be more helpful in making the proposed regulations easier to understand? If so, how?
- What else could we do to make the proposed regulations easier to understand?

Send any comments that concern how the Department could make these proposed regulations easier to understand to the person listed in the **ADDRESSES** section of the preamble.

Regulatory Flexibility Act Certification

The Secretary certifies that these proposed regulations would not have a significant economic impact on a substantial number of small entities. These proposed regulations would affect institutions of higher education, lenders, and guaranty agencies that participate in Title IV, HEA programs, and individual students and loan borrowers. The U.S. Small Business Administration (SBA) Size Standards define for-profit or nonprofit institutions with total annual revenue below $5,000,000 or institutions controlled by governmental entities with populations below 50,000, and lenders with total assets under $100 million, as ''small entities.'' Guaranty agencies are State and private nonprofit entities that act as agents of the Federal government, and as such are not considered ''small entities'' under the Regulatory Flexibility Act. Individuals are also not defined as ''small entities'' under the Regulatory Flexibility Act.

A significant percentage of the over 4,000 lenders participating in the FFEL program meet the definition of ''small entities.'' While these lenders and a number of institutions of higher education fall within the SBA size guidelines, the proposed regulations do not impose significant new costs on these entities.

The Secretary invites comments from small institutions and lenders as to whether they believe the proposed changes would have a significant economic impact on them and, if so, requests evidence to support that belief.

Paperwork Reduction Act of 1995

Sections 668.183, 668.193, 674.16, 674.19, 674.33, 674.34, 674.39, 674.42, 674.43, 674.45, 674.47, 674.50, 682.200, 682.209, 682.210, 682.211, 682.402, 682.405, 682.414, 682.604, 685.212, 685.220, and 685.304 contain information collection requirements. Under the Paperwork Reduction Act of 1995 (44 U.S.C. 3507(d)), the Department of Education has submitted a copy of these sections to the Office of Management and Budget (OMB) for its review.

Collection of Information: Student Assistance General Provisions, Federal Perkins Loan Program, Federal Family Education Loan Program, and William D. Ford Federal Direct Loan Program.

Sections 668.183 and 668.193—Definition of Default for Cohort Default Rate Calculations

The proposed regulations eliminate the current provision that includes in the numerator of the cohort default rate calculation for a proprietary, non-degree-granting institution certain Direct Loan borrowers who are repaying under the income contingent repayment plan. There is no change in the burden hours associated with the affected sections of the regulations as a result of this proposed change because we calculate cohort default rates.

Section 674.16—Master Promissory Note

To provide for the use of a Master Promissory Note (MPN) in the Perkins Loan Program, we have proposed eliminating the regulatory requirement that a Perkins borrower sign a promissory note for each award year. The adoption of an MPN in the Perkins Loan Program will simplify the loan process by eliminating the need for institutions to prepare, and students to sign, a promissory note each award year. Because institutional use of the Secretary's promissory note in the Federal Perkins Loan program is considered part of normal business practice in administering the Federal Perkins Loan program, there are no burden hours calculated for this section.

Section 674.19—Retention of Promissory Notes

The proposed regulation provides that if a promissory note was signed electronically it must be stored electronically in accordance with the record retention requirements of 34 CFR 668.24(d)(3)(i) through (iv). The proposed change would not affect the process for retaining records in the Federal Perkins Loan Program. Therefore, this provision would not add burden hours associated with this section.

Sections 674.33 and 674.42—Borrower Repayment

Current regulations would be modified to specify that an institution's responsibility to coordinate minimum monthly repayment amounts with other institutions begins only when the borrower requests such coordination. Because the coordination of minimum monthly accounts is considered to be a normal business practice in the administration of the Federal Perkins Loan Program, the proposed regulation would not affect the burden hours associated with this section.

Section 674.34—Economic Hardship Deferment

Under the proposed regulations for economic hardship deferments, the amount of the borrower's monthly payment on a Federal postsecondary education debt scheduled to be repaid in 10 years or less would be the actual monthly payment amount, instead of, as under current regulations, a derived amount produced by converting repayment periods of less than 10 years to standard 10-year repayment periods. These changes do not change the burden hours associated with this section of the regulations because they are sufficiently covered by the current burden estimate for the section.

Section 674.39—Rehabilitation of Defaulted Loans

The proposed regulations would prohibit rehabilitation of loans on which a judgment has been obtained. As a result, institutions would be partially relieved of the current regulatory burden associated with obtaining a newly signed promissory note from the borrower after rehabilitating a loan on which a judgment has been obtained. In addition, an institution would no longer be required to instruct the credit bureau to remove the default from the borrower's credit history. We estimate that 592,000 Perkins Loan borrowers are currently in default. An estimated 5,920 (or 1%) of these borrowers have loans on which a judgment has been obtained. We estimate that it takes approximately 10 minutes (.167 hours) per rehabilitated loan for the institution to have the borrower sign a new promissory note and to instruct the credit bureau to remove the default from the borrower's credit history. Therefore, the proposed change will result in a burden reduction of 989 hours.

Section 674.42—Copies of Promissory Notes

The proposed regulations would remove the requirement that an institution provide to each borrower at the exit interview a copy of the borrower's signed promissory note. Instead, institutions would only be required to provide contact information that will allow a borrower to request and receive a copy of the borrower's signed promissory note. The proposed change would reduce burden for institutions because they would no longer be required to provide a copy of the promissory note to all borrowers. Under current regulations, an estimated 600,000 copies of promissory notes were provided to borrowers at an estimated time of 1 minute (.017 hours) per copy.

We expect that under the proposed regulations only about 10 percent of the borrowers will request copies of their notes. Therefore, the proposed change would result in 540,000 fewer notes needing to be distributed with a burden reduction of 9,180 hours.

Section 674.42—Exit Counseling

The proposed regulations revise the Perkins counseling regulations to clarify that a party other than a school may provide counseling to borrowers on a school's behalf. There is no change in the burden hours associated with this section of the regulations as a result of this proposed change because the current burden estimate reflects the counseling that must be provided to borrowers regardless of whether a school, or a party on behalf of a school, provides the counseling.

The proposed regulations also revise the information that must be disclosed to borrowers through counseling to be consistent with the Direct Loan and FFEL program counseling regulations. These revisions include new information that must be disclosed to borrowers through counseling. The revisions and additions do not change the burden hours associated with this section of the regulations because they are sufficiently covered by the current burden estimate for the section.

Section 674.43—Late Charges

The proposed regulations would amend § 674.43(b)(2) by making the institution's assessment of late charges optional in the Federal Perkins Loan Program. An institution that adopts a policy of assessing late charges would be required to assess them to all borrowers with overdue payments. The proposed regulation would reduce burden hours in this section because some institutions will choose not to adopt a policy of assessing late charges and, therefore, would not be required to respond to borrower inquires and complaints concerning the imposition of those charges. There are currently an estimated 2000 institutions that participate in the Federal Perkins Loan Program. We estimate that 200 (or 10%) of these institutions will choose not to assess late charges. We approximate that, on average each of those institutions spends one hour per month (12 hours per year) communicating with borrowers about the late charge. As a result, the proposed change would result in a burden reduction of 2400 hours.

Section 674.45—Credit Bureau Reporting

The proposed provisions governing credit bureau reporting in § 674.45(a)(1) would be revised to clarify that the institution would report an account as being in default to a national credit bureau as part of the collection procedures that follow the billing procedures in § 674.43.

Because credit bureau reporting is considered to be a normal business practice in the administration of the Federal Perkins Loan Program, the proposed regulation would not affect the burden hours associated with this section.

Section 674.47—Write-offs

The proposed regulations would allow an institution to write-off account balances of less than $25 and, if the borrower has been billed for at least two years, balances of less than $50. The proposed regulations would also add new language making it clear that a borrower whose balance has been written off is relieved of all repayment obligations. The proposed regulations would reduce burden for institutions because they would no longer be required to pursue collection of defaulted accounts with low balances. We estimate that 592,000 Perkins Loan borrowers are currently in default. An estimated 5920 (or 1%) of these borrowers would be eligible for write-off under the proposed regulations. We estimate that performing collection procedures on an overdue account takes 1 hour (1.00 hours) per borrower. Therefore, the proposed change will result in a burden reduction of 5,920 hours.

Section 674.50—Assignment of Loans

Two changes have been proposed for this section. The first change would conform the regulations to the requirement that an institution assign a loan to the Department when it makes a preliminary determination that the borrower qualifies for a total and permanent disability discharge on the loan. The second change conforms to an earlier change made in § 674.13, which provides the Secretary with the discretion to determine the circumstances under which reimbursement to the institution's Federal Perkins Loan fund would be appropriate. Because the proposed amendments in this section are technical conforming changes to earlier regulatory changes, we have determined that there are no burden hours associated with this section.

Section 682.200—Definitions

The proposed regulations would revise the definition of *Lender* to clarify that loans held in trust are not considered part of a trustee lender's consumer credit function in determining whether the lender has exceeded the limit of one-half of the lender's combined consumer credit loan portfolio. The revision to the definition does not change the burden hours associated with this section of the regulations because there is no burden currently associated with this provision.

Section 682.209—Repayment of a Loan

The proposed regulations would reduce burden on lenders by permitting them to establish first payment due dates for Stafford loan borrowers within 60 days following certain events instead of within 45 days under current requirements. As a result of these proposed regulations, the Stafford loan repayment due dates would be the same as those generally permitted for the PLUS and Consolidation loan programs, although the starting dates that trigger the 60-day deadline are different in the three programs. Since lenders would, under the proposed rule, simply re-set their computer systems and send out the same number of billings, there is no significant burden reduction as a result of this change.

Sections 682.210 and by Reference, 685.204—Deferment

The proposed regulations would affect the ability of borrowers to qualify for unemployment and economic hardship deferments. Current regulations require certain borrowers to provide job-search documentation to the lender. The proposed regulations would permit those borrowers to qualify for an unemployment deferment without providing specific details of their job searches.

For economic hardship deferments, the amount of the borrower's monthly payment on a Federal postsecondary education debt scheduled to be repaid in 10 years or less would be the actual monthly payment amount, instead of, as under current regulations, a derived amount produced by converting repayment periods of less than 10 years to a standard 10-year calculation. Because those derived amounts are generally lower than the actual monthly repayment amounts and will no longer be used if a borrower's loans are scheduled to be repaid in 10 years or less, more borrowers should qualify for economic hardship deferments.

These revisions do not change the burden hours associated with this

section of the regulations because the burden associated with the current requirement is associated with the forms that borrowers use to request unemployment and economic hardship deferments.

Section 682.211—Forbearance

The proposed regulations would decrease the required frequency of lender contacts with certain borrowers in forbearance from once every 3 months to once every 6 months. However, to compensate for this less frequent communication, the lender would be required to enhance some of the information it provides to the borrower about the status of the borrower's loan balance. Taken together, these two changes appear to cancel each other out and result in no net increase in burden to the lender.

Section 682.402—Death, Disability, Closed School, False Certification, Unpaid Refunds, and Bankruptcy Payments

The proposed regulations would provide that a guaranty agency that is a state agency is not required to file a proof of claim and it may instruct lenders not to file proof of claims on loans that it guaranteed.

The proposed regulations would change the timeframe in which a guaranty agency must pay a claim to a lender for a disability discharge from 45 days to 90 days.

These revisions do not change the burden hours associated with this section of the regulations.

Section 682.405—Loan Rehabilitation Agreement

The proposed regulations would prohibit rehabilitation of loans on which a judgment has been obtained. Because guaranty agencies would no longer permit the rehabilitation of these debts, lenders and guaranty agencies would be relieved of the current regulatory burden associated with obtaining a newly signed promissory note from the borrower prior to the sale of a rehabilitated judgment debt. However, this change does not impact the burden hours associated with this section of the regulations because there is no burden currently associated with this provision.

Section 682.414—Records, Reports, and Inspection Requirement for Guaranty Agency Programs

The proposed regulations state that if a promissory note was signed electronically it must be stored electronically in accordance with record retention requirements of 34 CFR 668.24. This revision is a clarification of current regulations, and has no effect on the burden hours associated with this section.

Section 682.604—Processing the Borrower's Loan Proceeds and Counseling Borrowers

The proposed changes would update the counseling requirements to ensure consistency among the FFEL, Perkins, and Direct Loan programs, and would clarify that parties other than the school may provide the counseling. There is no change in the burden hours because the current burden hour estimate reflects counseling that must be provided to borrowers regardless of whether the counseling is provided by the school itself, or a party on behalf of the school.

Section 685.212—Discharge of a Loan Obligation and Section 685.220 —Consolidation

The proposed regulations specify that if a Direct Consolidation Loan includes a PLUS loan obtained for a student who died, the portion of the Direct Consolidation Loan attributable to that PLUS loan is discharged. The proposed regulations also provide for the discharge of the applicable portion of a Direct Consolidation Loan that is obtained jointly by two married borrowers if one of the borrowers dies or becomes totally and permanently disabled. There is no change in the burden hours associated with the affected sections of the regulations as a result of these proposed changes because the slight increase in the number of borrowers who will be eligible to apply for these benefits is sufficiently covered by the current burden estimates for the affected sections.

Section 685.304—Counseling Borrowers

The proposed regulations revise the counseling regulations to clarify that a party other than a school may provide counseling to borrowers on a school's behalf. This proposed change makes the regulations consistent with longstanding guidance that has allowed another party to provide counseling for a school, as long as the school ensured that the counseling was provided and included all of the necessary information. There is no change in the burden hours associated with this section of the regulations as a result of this proposed change because the current burden estimate reflects the counseling that must be provided to borrowers regardless of whether a school or a party on behalf of a school provides the counseling.

The proposed regulations also revise the information that must be disclosed to borrowers through counseling to be consistent with the Perkins Loan and FFEL program counseling regulations. These revisions include two new pieces of information that must be disclosed to borrowers through counseling. The revisions to the disclosure requirements do not change the burden hours associated with this section of the regulations because they are sufficiently covered by the current burden estimate for the section.

If you want to comment on the information collection requirements, please send your comments to the Office of Information and Regulatory Affairs, OMB, room 10235, New Executive Office Building, Washington, DC 20503; Attention: Desk Officer for U.S. Department of Education. You may also send a copy of these comments to the Department representative named in the **ADDRESSES** section of this preamble.

We consider your comments on these proposed collections of information in—

- Deciding whether the proposed collections are necessary for the proper performance of our functions, including whether the information will have practical use;
- Evaluating the accuracy of our estimate of the burden of the proposed collections, including the validity of our methodology and assumptions;
- Enhancing the quality, usefulness, and clarity of the information we collect; and
- Minimizing the burden on those who must respond. This includes exploring the use of appropriate automated, electronic, mechanical, or other technological collection techniques or other forms of information technology; *e.g.,* permitting electronic submission of responses.

OMB is required to make a decision concerning the collections of information contained in these proposed regulations between 30 and 60 days after publication of this document in the **Federal Register**. Therefore, to ensure that OMB gives your comments full consideration, it is important that OMB receives the comments within 30 days of publication. This does not affect the deadline for your comments to us on the proposed regulations.

Assessment of Educational Impact

The Secretary particularly requests comments on whether these proposed regulations would require transmission of information that any other agency or authority of the United States gathers or makes available.

Electronic Access to This Document

You may view this document, as well as all other Department of Education documents published in the **Federal Register**, in text or Adobe Portable Document Format (PDF) on the Internet at the following site: *www.ed.gov/legislation/FedRegister.*

To use PDF you must have Adobe Acrobat Reader, which is available free at this site. If you have questions about using PDF, call the U.S. Government Printing Office (GPO), toll free, at 1–888–293–6498; or in the Washington, DC, area at (202) 512–1530.

You may also view this document in PDF format at the following site: *Ifap.ed.gov.*

Note: The official version of this document is the document published in the **Federal Register**. Free Internet access to the official edition of the **Federal Register** and the Code of Federal Regulations is available on GPO Access at: *http://www.access.gpo.gov/nara/index.html.*

(Catalog of Federal Domestic Assistance Number: 84.032 Federal Family Education Loan Program; 84.037 Federal Perkins Loan Program; and 84.268 William D. Ford Federal Direct Loan Program)

List of Subjects

34 CFR Part 668

Administrative practice and procedure, Colleges and universities, Consumer protection, Education, Grant programs-education, Loan programs-education, Reporting and recordkeeping requirements, Student aid, Vocational education.

34 CFR 674, 682 and 685

Administrative practice and procedure, Colleges and universities, Education, Loan programs-education, Reporting and recordkeeping requirements, Student aid, Vocational education.

Dated: July 25, 2002.

Rod Paige,

Secretary of Education.

For the reasons discussed in the preamble, the Secretary proposes to amend parts 668, 674, 682, and 685 of title 34 of the Code of Federal Regulations as follows:

PART 668—STUDENT ASSISTANCE GENERAL PROVISIONS

1. The authority citation for part 668 continues to read as follows:

Authority: 20 U.S.C. 1001, 1002, 1003, 1085, 1091, 1091b, 1092, 1094, 1099c, and 1099c–1, unless otherwise noted.

2. Section 668.35 is amended:

A. In paragraph (a)(2), by adding new introductory text.

B. By redesignating paragraphs (b), (c), (d), (e), and (f) as (d), (e), (f), (g), and (h) respectively.

C. By adding new paragraphs (b) and (c).

The revision and additions read as follows:

§ 668.35 Student debts under the HEA and to the U.S.

(a) * * *

(2) Except as limited by paragraph (c) of this section—

* * * * *

(b) A student who is subject to a judgment for failure to repay a loan made under a title IV, HEA loan program may nevertheless be eligible to receive title IV, HEA program assistance if the student—

(1) Repays the debt in full; or

(2) Except as limited by paragraph (c) of this section—

(i) Makes repayment arrangements that are satisfactory to the holder of the debt; and

(ii) Makes at least six consecutive monthly payments under those arrangements.

(c) A student may reestablish eligibility under paragraph (a)(2) or (b)(2) of this section only once. For example, a student who reestablishes eligibility under paragraph (a)(2) may not reestablish eligibility under paragraph (b)(2).

* * * * *

§ 668.183 [Amended]

3. Section 668.183(c)(1) is amended as follows:

A. In paragraph (c)(1)(ii), by adding ''or'' after the semi-colon.

B. By removing paragraph (c)(1)(iii).

C. By redesignating paragraph (c)(1)(iv) as (c)(1)(iii).

§ 668.193 [Amended]

4. Section 668.193 is amended:

A. In paragraph (d)(1), by removing the last sentence.

B. By removing paragraph (f)(3).

PART 674—FEDERAL PERKINS LOAN PROGRAM

5. The authority citation for part 674 continues to read as follows:

Authority: 20 U.S.C. 1087aa-1087hh and 20 U.S.C. 421–429 unless otherwise noted.

6. Section 674.2(b) is amended:

A. By revising the definition of ''Making of a loan''.

B. By adding, in alphabetical order, a new definition of ''Master Promissory Note (MPN)''.

The revision and addition read as follows:

§ 674.2 Definitions.

* * * * *

(b) * * *

Making of a loan: When the institution makes the first disbursement of a loan to a student for an award year.

Master Promissory Note (MPN): A promissory note under which the borrower may receive loans for a single award year or multiple award years.

* * * * *

§ 674.9 [Amended]

7. Section 674.9 is amended:

A. By removing paragraph (g).

B. By redesignating paragraphs (h), (i), (j), (k) and (l) as (g), (h),(i), (j) and (k) respectively.

C. In newly redesignated paragraph (g)(3), by removing ''(h)(1) and (h)(2)'' and adding, in its place, ''(g)(1) and (g)(2)''; and by removing the period at the end of the last sentence and adding, in its place, a ''; and''.

8. Section 674.16 is amended:

A. By revising paragraph (d)(2).

B. By adding a new paragraph (d)(3).

The revision and addition read as follows:

§ 674.16 Making and disbursing loans.

* * * * *

(d) * * *

(2) The institution shall ensure that each loan is supported by a legally enforceable promissory note as proof of the borrower's indebtedness.

(3) If the institution uses the Master Promissory Note (MPN), the institution's ability to make additional loans based on an MPN will automatically expire upon the earliest of—

(i) The date the institution receives written notification from the borrower requesting that the MPN no longer be used as the basis for additional loans;

(ii) Twelve months after the date the borrower signed the MPN if no disbursements are made by the institution under that MPN; or

(iii) Ten years from the date the borrower signed the MPN or the date the institution receives the MPN, except that a remaining portion of a loan may be disbursed after this date.

* * * * *

§ 674.17 [Amended]

9. Section 674.17 is amended:

A. In paragraph (a), by removing in the introductory text ''one or more of''.

B. By removing paragraph (a)(2).

C. By redesignating paragraph (a)(3) as paragraph (a)(2).

D. In redesignated paragraph (a)(2), by removing ''transfer'' and adding, in its place, ''assignment''; and by removing ''Department of Education'' and adding, in its place, ''United States''.

E. In paragraph (b), by removing ''transfers'' and adding, in its place, sbull I11''assigns''.

F. By removing paragraphs (c), (d), and (e).

10. Section 674.19(e)(4) is revised to read as follows:

§ 674.19 Fiscal procedures and records.

* * * * *

(e) * * *

(4) *Manner of retention of promissory notes and repayment schedules.* An institution shall keep the original promissory notes and repayment schedules until the loans are satisfied. If required to release original documents in order to enforce the loan, the institution must retain certified true copies of those documents.

(i) An institution shall keep the original paper promissory note or original paper Master Promissory Note (MPN) and repayment schedules in a locked, fireproof container.

(ii) The institution shall retain a promissory note that was signed by the borrower electronically in accordance with 34 CFR 668.24(d)(3)(i) through (iv).

(iii) After the loan obligation is satisfied, the institution shall return the original or a true and exact copy of the note marked ''paid in full'' to the borrower, or otherwise notify the borrower in writing that the loan is paid in full, and retain a copy for the prescribed period.

(iv) An institution shall maintain separately its records pertaining to cancellations of Defense, NDSL, and Federal Perkins Loans.

(v) Only authorized personnel may have access to the loan documents.

11. Section 674.33(b) is amended as follows:

A. By revising the introductory text following the heading in paragraph (b)(2).

B. By revising the text following the heading of paragraph (b)(3).

The revisions read as follows:

§ 674.33 Repayment.

* * * * *

(b) * * *

(2) * * * If a borrower has received loans from more than one institution and has notified the institution that he or she wants the minimum monthly payment determination to be based on payments due to other institutions, the following rules apply:

* * * * *

(3) * * * If the borrower has notified the institution that he or she wants the minimum monthly payment determination to be based on payments due to the other institutions, and if the total monthly repayment is less than $30 and the monthly repayment on a Defense loan is less than $15 a month, the amount attributed to the Defense loan may not exceed $15 a month.

* * * * *

12. Section 674.34(e)(10) is revised to read as follows:

§ 674.34 Deferment of repayment—Federal Perkins loans, NDSLs and Defense loans.

* * * * *

(e) * * *

(10) In determining a borrower's eligibility for an economic hardship deferment under paragraph (e)(5) of this section, the institution shall—

(i) If the Federal postsecondary education loan is scheduled to be repaid in 10 years or less, use the actual monthly payment amount (or a proportional share if the payments are due less frequently than monthly); or

(ii) If the Federal postsecondary education loan is scheduled to be repaid in more than 10 years, use a monthly payment amount (or a proportional share if the payments are due less frequently than monthly) that would have been due on the loan if the loan had been scheduled to be repaid in 10 years.

* * * * *

§ 674.39 [Amended]

13. Section 674.39(a) is amended as follows:

A. In the first sentence of the introductory text in paragraph (a), by adding '', except for loans for which a judgment has been secured'' after ''part''.

B. In paragraph (a)(2), by removing ''; and'' and adding, in its place, a period.

C. By removing paragraph (a)(3).

14. Section 674.42 is amended:

A. By revising paragraph (a)(10).

B. By adding a new paragraph (a)(11).

C. By revising paragraph (b)(1) and the introductory text in paragraph (b)(2).

D. In paragraph (b)(2)(i), by removing ''that'' and adding, in its place, ''the''.

E. By revising paragraph (b)(2)(iii).

F. In paragraph (b)(2)(v), by removing ''in forceful terms''.

G. In paragraph (b)(2)(vii), by removing ''with'' and adding, in its place, ''for''.

H. In paragraph (b)(2)(viii), by removing ''corrections to the institution's records'' and adding, in its place, ''current information''; and by removing ''and'' following the semi-colon.

I. In paragraph (b)(2)(ix), by removing ''with'' and adding, in its place, ''for''; and by removing the period and adding, in its place, ''; and''.

J. By adding a new paragraph (b)(2)(x).

K. By removing paragraph (b)(3).

L. By redesignating paragraphs (b)(4) and (b)(5) as (b)(3) and (b)(4) respectively.

M. By revising newly redesignated paragraph (b)(3).

The revisions and additions read as follows:

§ 674.42 Contact with the borrower.

(a) * * *

(10) The contact information of a party who, upon request of the borrower, will provide the borrower with a copy of his or her signed promissory note.

(11) An explanation that if a borrower is required to make minimum monthly repayments, and the borrower has received loans from more than one institution, the borrower must notify the institution if he or she wants the minimum monthly payment determination to be based on payments due to other institutions.

(b) * * * (1) An institution must ensure that exit counseling is conducted with each borrower either in person, by audiovisual presentation, or by interactive electronic means. The institution must ensure that exit counseling is conducted shortly before the borrower ceases at least half-time study at the institution. As an alternative, in the case of a student enrolled in a correspondence program or a study-abroad program that the school approves for credit, the school may provide written counseling material by mail within 30 days after the borrower completes the program. If the borrower withdraws from school without the school's prior knowledge or fails to complete an exit counseling session as required, the school must ensure that exit counseling is provided through either interactive electronic means or by mailing counseling material to the borrower at the borrower's last known address within 30 days after learning that the borrower has withdrawn from school or failed to complete exit counseling as required.

(2) The exit counseling must—

* * * * *

(iii) Suggest to the borrower debt-management strategies that would facilitate repayment;

* * * * *

(x) Inform the borrower of the availability of title IV loan information in the National Student Loan Data System (NSLDS).

(3) If exit counseling is conducted through interactive electronic means, a school must take reasonable steps to ensure that each student borrower receives the counseling materials, and

participates in and completes the exit counseling.

* * * * *

§ 674.43 [Amended]

15. Section 674.43(b)(2) is amended in the introductory text by removing ''shall'' and adding, in its place, ''may''.

§ 674.45 [Amended]

16. Section 674.45(a)(1) is amended by removing ''defaulted account'' and adding, in its place, ''account as being in default''.

§ 674.46 [Amended]

17. Section 674.46(a)is amended as follows:

A. In the introductory text of paragraph (a)(1), by removing ''annually'' and adding, in its place, ''once every two years''.

B. In paragraph (a)(1)(i), by removing ''$200'' and adding, in its place, ''$500''.

18. Section 674.47 is amended:

A. By removing paragraph (g)(1).

B. By redesignating paragraphs (g)(2), (g)(2)(i), and (g)(2) (ii) as paragraph (g) introductory text, paragraph (g)(1), and paragraph (g)(2) respectively.

C. In newly redesignated paragraph (g)(1), by removing the last ''the'' and adding, in its place, ''this''.

D. In the paragraph (h) heading, by removing ''of less than $5''.

E. By revising paragraph (h)(1).

F. By adding a new paragraph (h)(3).

The revision and addition read as follows:

§ 674.47 Costs chargeable to the Fund.

* * * * *

(h) * * *

(1) Notwithstanding any other provision in this subpart, an institution may write off an account, including outstanding principal, accrued interest, collection costs, and late charges, with a balance of—

(i) Less than $25; or

(ii) Less than $50 if, for a period of at least 2 years, the borrower has been billed for this balance in accordance with § 674.43(a).

* * * * *

(3) When the institution writes off an account, the borrower is relieved of all repayment obligations.

§ 674.50 [Amended]

19. Section 674.50 is amended:

A. In paragraph (e)(2)(ii), by adding ''or'' after the semicolon.

B. In paragraph (e)(3), by deleting ''; or'' at the end of paragraph and adding, in its place, a period.

C. By removing paragraph (e)(4).

D. In paragraph (g)(2), by adding ''Secretary may require the'' after ''The''; and by removing ''shall'' and adding, in its place, ''to''.

PART 682—FEDERAL FAMILY EDUCATION LOAN (FFEL) PROGRAM

20. The authority citation for part 682 continues to read as follows:

Authority: 20 U.S.C. 1071 to 1087–2, unless otherwise noted.

§ 682.200 [Amended]

21. Section 682.200(b) is amended:

A. By adding a sentence at the end of the definition of ''Lender'' in paragraph (b)(2)(ii) to read as follows: ''For purposes of this paragraph, loans held in trust by a trustee lender are not considered part of the trustee lender's consumer credit function.''

B. Revise the definition of ''Master promissory note (MPN)'' to read ''Master Promissory Note (MPN)''.

22. Section 682.204 is amended by adding new paragraphs (a)(8), (a)(9), (d)(7), and (d)(8) to read as follows:

§ 682.204 Maximum loan amounts.

(a) * * *

(8) Except as provided in paragraph (a)(4) of this section, an undergraduate student who is enrolled in a program that is one academic year or less in length may not borrow an amount for any academic year of study that exceeds the amounts in paragraph (a)(1) of this section.

(9) Except as provided in paragraph (a)(4) of this section—

(i) An undergraduate student who is enrolled in a program that is more than one academic year in length and who has not successfully completed the first year of that program may not borrow an amount for any academic year of study that exceeds the amounts in paragraph (a)(1) of this section.

(ii) An undergraduate student who is enrolled in a program that is more than one academic year in length and who has successfully completed the first year of that program, but has not successfully completed the second year of the program, may not borrow an amount for any academic year of study that exceeds the amounts in paragraph (a)(2) of this section.

* * * * *

(d) * * *

(7) Except as provided in paragraph (d)(4) of this section, an undergraduate student who is enrolled in a program that is one academic year or less in length may not borrow an amount for any academic year of study that exceeds the amounts in paragraph (d)(1) of this section.

(8) Except as provided in paragraph (d)(4) of this section—

(i) An undergraduate student who is enrolled in a program that is more than one academic year in length and who has not successfully completed the first year of that program may not borrow an amount for any academic year of study that exceeds the amounts in paragraph (d)(1) of this section.

(ii) An undergraduate student who is enrolled in a program that is more than one academic year in length and who has successfully completed the first year of that program, but has not successfully completed the second year of the program, may not borrow an amount for any academic year of study that exceeds the amounts in paragraph (d)(2) of this section.

* * * * *

23. Section 682.209(a) is amended by:

A. Removing the number ''45'' each time it appears in paragraphs (a)(3)(ii), (A), (a)(3)(ii)(B), and (a)(3)(ii)(C), and adding, in its place, the number ''60''.

B. Adding a new paragraph (a)(3)(iii).

C. Revising the last sentence in paragraph (a)(8)(iv).

The revisions and addition read as follows:

§ 682.209 Repayment of a loan.

(a) * * *

(3) * * *

(iii) When determining the date that the student was no longer enrolled on at least a half-time basis, the lender must use a new date it receives from the school, unless the lender has already disclosed repayment terms to the borrower and the new date is within the same month and year as the most recent date reported to the lender.

* * * * *

(8) * * *

(iv) * * * Subject to paragraph (a)(8)(iii) of this section, a borrower who makes such a request may notify the lender at any time to extend the repayment period to a minimum of 5 years.

* * * * *

24. Section 682.210 is amended by revising paragraphs (h)(2), (h)(3)(iv), (h)(4), (s)(6)(vii), and (s)(6)(ix) to read as follows:

§ 682.210 Deferment.

* * * * *

(h) * * *

* * * * *

(2) A borrower also qualifies for an unemployment deferment by providing to the lender a written certification, or an equivalent as approved by the Secretary, that—

(i) The borrower has registered with a public or private employment agency, if one is available to the borrower within

a 50-mile radius of the borrower's current address; and

(ii) For all requests beyond the initial request, the borrower has made at least six diligent attempts during the preceding 6-month period to secure full-time employment.

(3) * * *

* * * * *

(iv) A borrower requesting an initial period of unemployment deferment is not required to describe his or her search for full-time employment at the time the deferment is granted. The initial period of unemployment deferment may be granted for a period of unemployment beginning up to 6 months before the date the lender receives the borrower's request, and may be granted for up to 6 months after that date.

(4) A lender may not grant an unemployment deferment beyond the date that is 6 months after the date the borrower provides evidence of the borrower's eligibility for unemployment insurance benefits under paragraph (h)(1) of this section or the date the borrower provides the written certification under paragraph (h)(2) of this section.

* * * * *

(s) * * *

(6) * * *

* * * * *

(vii) In determining a borrower's Federal education debt burden for purposes of an economic hardship deferment under paragraphs (s)(6)(iv) and

(v) of this section, the lender shall—

(A) If the Federal postsecondary education loan is scheduled to be repaid in 10 years or less, use the actual monthly payment amount (or a proportional share if the payments are due less frequently than monthly);

(B) If the Federal postsecondary education loan is scheduled to be repaid in more than 10 years, use a monthly payment amount (or a proportional share if the payments are due less frequently than monthly) that would have been due on the loan if the loan had been scheduled to be repaid in 10 years; and

(C) Require the borrower to provide evidence that would enable the lender to determine the amount of the monthly payments that would have been owed by the borrower during the deferment period.

* * * * *

(ix) To qualify for a subsequent period of deferment that begins less than one year after the end of a period of deferment under paragraphs (s)(6)(iii) through (v) of this section, the lender must require the borrower to submit evidence showing the amount of the borrower's monthly income or a copy of the borrower's most recently filed Federal income tax return.

* * * * *

25. Section 682.211 is amended by:

A. Revising paragraphs (b), (c), and (e).

B. Amending the introductory text of paragraph (f) by adding the words ''or would be due'' after the word ''overdue''.

C. Amending paragraph (f)(2) by removing the reference to paragraph ''(f)(10)'' and adding, in its place, ''(f)(11)''.

D. Revising paragraph (f)(11).

E. Redesignating paragraph (h)(3) as paragraph (h)(4).

F. Adding a new paragraph (h)(3).

The revisions and addition read as follows:

§ 682.211 Forbearance.

* * * * *

(b) A lender may grant forbearance if—

(1) The lender and the borrower or endorser agree to the terms of the forbearance and, unless the agreement was in writing, the lender sends, within 30 days, a notice to the borrower or endorser confirming the terms of the forbearance; or

(2) In the case of forbearance of interest during a period of deferment, if the lender informs the borrower at the time the deferment is granted that interest payments are to be forborne.

(c) A lender may grant forbearance for a period of up to one year at a time if both the borrower or endorser and an authorized official of the lender agree to the terms of the forbearance. If the lender and the borrower or endorser agree to the terms orally, the lender must notify the borrower or endorser of the terms within 30 days of that agreement.

* * * * *

(e) Except in the case of forbearance of interest payments during a deferment period if a forbearance involves the postponement of all payments, the lender must contact the borrower or endorser at least once every six months during the period of forbearance to inform the borrower or endorser of—

(1) The outstanding obligation to repay;

(2) The amount of the unpaid principal balance and any unpaid interest that has accrued on the loan;

(3) The fact that interest will accrue on the loan for the full term of the forbearance; and

(4) The borrower or endorser's option to discontinue the forbearance at any time.

(f) * * *

(11) For a period not to exceed 3 months when the lender determines that a borrower's ability to make payments has been adversely affected by a natural disaster, a local or national emergency as declared by the appropriate government agency, or a military mobilization.

* * * * *

(h) * * *

(3) *Written agreement.* The terms of the forbearance must be agreed to in writing—

(i) By the lender and the borrower for a forbearance under paragraphs (h)(1) or (h)(2)(ii)(A) of this section; or

(ii) By the lender and the borrower or endorser for a forbearance under paragraph (h)(2)(i) of this section.

* * * * *

§ 682.402 [Amended]

26. Section 682.402 is amended by:

A. Redesignating paragraphs (a)(2) through (a)(4) as paragraphs (a)(3) through (a)(5), respectively.

B. Adding a new paragraph (a)(2).

C. Amending newly redesignated paragraph (a)(3) by removing the words ''or a Consolidation loan was obtained by a married couple,''.

D. Amending newly redesignated paragraph (a)(5)(iii) by removing the reference to paragraph ''(a)(4)(i) or (ii)'' and adding, in its place, ''(a)(5)(i) or (ii)''.

E. Adding a new paragraph (b)(6).

F. Revising paragraph (f)(4).

G. Revising paragraph (g)(1)(i).

H. Revising paragraph (h)(1)(i).

I. Revising paragraph (h)(3)(iii).

The revisions and additions read as follows:

§ 682.402 Death, disability, closed school, false certification, unpaid refunds, and bankruptcy payments.

(a) * * *

(2) If a Consolidation loan was obtained jointly by a married couple, the amount of the Consolidation loan that is discharged if one of the borrowers dies or becomes totally and permanently disabled is equal to the portion of the outstanding balance of the Consolidation loan attributable to any of that borrower's loans that would have been eligible for discharge.

* * * * *

(b) * * *

(6) In the case of a Federal Consolidation Loan that includes a Federal PLUS or Direct PLUS loan borrowed for a dependent who has died, the obligation of the borrower or any

endorser to make any further payments on the portion of the outstanding balance of the Consolidation Loan attributable to the Federal PLUS or Direct PLUS loan is discharged as of the date of the dependent's death.

* * * * *

(f) * * *

(4) *Proof of claim.* (i) Except as provided in paragraph (f)(4)(ii) of this section, the holder of the loan shall file a proof of claim with the bankruptcy court within—

(A) 30 days after the holder receives a notice of first meeting of creditors unless, in the case of a proceeding under chapter 7, the notice states that the borrower has no assets; or

(B) 30 days after the holder receives a notice from the court stating that a chapter 7 no-asset case has been converted to an asset case.

(ii) A guaranty agency that is a state guaranty agency, and on that basis may assert immunity from suit in bankruptcy court, and that does not assign any loans affected by a bankruptcy filing to another guaranty agency—

(A) Is not required to file a proof of claim on a loan already held by the guaranty agency; and

(B) May direct lenders not to file proofs of claim on loans guaranteed by that agency.

* * * * *

(g) * * *

(1) * * *

(i) The original or a true and exact copy of the promissory note.

* * * * *

(h) * * *

(1) * * *

(i) The guaranty agency shall review a death, disability, bankruptcy, closed school, or false certification claim promptly and shall pay the lender on an approved claim the amount of loss in accordance with paragraphs (h)(2) and (h)(3) of this section—

(A) Not later than 45 days after the claim was filed by the lender for death and bankruptcy claims; and

(B) Not later than 90 days after the claim was filed by the lender for disability, closed school, or false certification claims.

* * * * *

(3) * * *

(iii) During the period required by the guaranty agency to approve the claim and to authorize payment or to return the claim to the lender for additional documentation not to exceed—

(A) 45 days for death or bankruptcy claims; or

(B) 90 days for disability, closed school, or false certification claims.

* * * * *

27. Section 682.405 is amended by:

A. Adding the words ‘‘, except for loans for which a judgment has been obtained,’’ after ‘‘defaulted loans’’ in paragraph (a)(1).

B. Removing paragraph (a)(4).

C. Revising the fifth sentence in paragraph (b)(1).

The revision reads as follows:

§ 682.405 Loan rehabilitation agreement.

* * * * *

(b) * * *

(1) * * * Voluntary payments are those made directly by the borrower, and do not include payments obtained by Federal offset, garnishment, income or asset execution, or after a judgment has been entered on a loan. * * *

* * * * *

28. Section 682.414 is amended by revising paragraph (a)(5)(ii) to read as follows:

§ 682.414 Records, reports, and inspection requirements for guaranty agency programs.

(a) * * *

(5) * * *

(ii) If a promissory note was signed electronically, the guaranty agency or lender must store it in accordance with 34 CFR 668.24(d)(3)(i) through (iv).

* * * * *

29. Section 682.604 is amended by:

A. Revising paragraph (f)(1).

B. Revising the introductory text of paragraph (f)(2).

C. Revising paragraph (f)(2)(iii).

D. In paragraph (f)(2)(iv), removing the period and adding, in its place, ‘‘; and’’.

E. Adding a new paragraph (f)(2)(v).

F. Revising paragraph (f)(3).

G. Revising paragraph (g)(1).

H. Revising paragraph (g)(2).

I. Revising paragraph (g)(3).

The revisions and addition read as follows:

§ 682.604 Processing the borrower's loan proceeds and counseling borrowers.

* * * * *

(f) * * *

(1) A school must ensure that initial counseling is conducted with each Stafford loan borrower either in person, by audiovisual presentation, or by interactive electronic means prior to its release of the first disbursement, unless the student borrower has received a prior Federal Stafford, Federal SLS, or Direct subsidized or unsubsidized loan. A school must ensure that an individual with expertise in the title IV programs is reasonably available shortly after the counseling to answer the student borrower's questions regarding those programs. As an alternative, in the case of a student borrower enrolled in a correspondence program or a student borrower enrolled in a study-abroad program that the home institution approves for credit, the counseling may be provided through written materials, prior to releasing those loan proceeds.

(2) The initial counseling must—

* * * * *

(iii) Describe the likely consequences of default, including adverse credit reports, Federal offset, and litigation;

* * * * *

(v) Inform the student borrower of sample monthly repayment amounts based on a range of student levels of indebtedness or on the average indebtedness of Stafford loan borrowers at the same school.

(3) If initial counseling is conducted through interactive electronic means, a school must take reasonable steps to ensure that each student borrower receives the counseling materials, and participates in and completes the initial counseling.

* * * * *

(g) * * *

(1) A school must ensure that exit counseling is conducted with each Stafford loan borrower either in person, by audiovisual presentation, or by interactive electronic means. In each case, the school must ensure that this counseling is conducted shortly before the student borrower ceases at least half-time study at the school, and that an individual with expertise in the title IV programs is reasonably available shortly after the counseling to answer the student borrower's questions. As an alternative, in the case of a student borrower enrolled in a correspondence program or a study-abroad program that the home institution approves for credit, written counseling materials may be provided by mail within 30 days after the student borrower completes the program. If a student borrower withdraws from school without the school's prior knowledge or fails to complete an exit counseling session as required, the school must ensure that exit counseling is provided through either interactive electronic means or by mailing written counseling materials to the student borrower at the student borrower's last known address within 30 days after learning that the student borrower has withdrawn from school or failed to complete the exit counseling as required.

(2) The exit counseling must—

(i) Inform the student borrower of the average anticipated monthly repayment amount based on the student borrower's indebtedness or on the average indebtedness of student borrowers who

have obtained Stafford or SLS loans for attendance at the same school or in the same program of study at the same school;

(ii) Review for the student borrower available repayment options, including standard, graduated, extended, and income-sensitive repayment plans and loan consolidation;

(iii) Suggest to the student borrower debt-management strategies that would facilitate repayment;

(iv) Include the matters described in paragraph (f)(2) of this section;

(v) Review for the student borrower the conditions under which the student borrower may defer or forbear repayment or obtain a full or partial discharge of a loan;

(vi) Require the student borrower to provide current information concerning name, address, social security number, references, and driver's license number and State of issuance, as well as the student borrower's expected permanent address, the address of the student borrower's next of kin, and the name and address of the student borrower's expected employer (if known). The school must ensure that this information is provided to the guaranty agency or agencies listed in the student borrower's records within 60 days after the student borrower provides the information;

(vii) Review for the student borrower information on the availability of the Student Loan Ombudsman's office; and

(viii) Inform the student borrower of the availability of title IV loan information in the National Student Loan Data System (NSLDS).

(3) If exit counseling is conducted by electronic interactive means, the school must take reasonable steps to ensure that each student borrower receives the counseling materials, and participates in and completes the counseling.

* * * * *

PART 685—WILLIAM D. FORD FEDERAL DIRECT LOAN PROGRAM

30. The authority citation for part 685 continues to read as follows:

Authority: 20 U.S.C. 1087a *et seq.*, unless otherwise noted.

31. Section 685.102(b) is amended by revising the definition of ''Master Promissory Note (MPN)'' to read as follows:

§ 685.102 Definitions.

* * * * *

(b) * * *

Master Promissory Note (MPN): (1) A promissory note under which the borrower may receive loans for a single academic year or multiple academic years.

(2) For MPNs processed by the Secretary before July 1, 2003, loans may no longer be made under an MPN after the earliest of—

(i) The date the Secretary or the school receives the borrower's written notice that no further loans may be disbursed;

(ii) One year after the date of the borrower's first anticipated disbursement if no disbursement is made during that twelve-month period; or

(iii) Ten years after the date of the first anticipated disbursement, except that a remaining portion of a loan may be disbursed after this date.

(3) For MPNs processed by the Secretary on or after July 1, 2003, loans may no longer be made under an MPN after the earliest of—

(i) The date the Secretary or the school receives the borrower's written notice that no further loans may be disbursed;

(ii) One year after the date the borrower signed the MPN or the date the Secretary receives the MPN, if no disbursements are made under that MPN; or

(iii) Ten years after the date the borrower signed the MPN or the date the Secretary receives the MPN, except that a remaining portion of a loan may be disbursed after this date.

* * * * *

32. Section 685.203 is amended:

A. By adding new paragraphs (a)(8) and (a)(9).

B. By adding new paragraphs (c)(2)(viii) and (c)(2)(ix).

The additions read as follows:

§ 685.203 Loan limits.

(a) * * *

(8) Except as provided in paragraph (a)(4) of this section, an undergraduate student who is enrolled in a program that is one academic year or less in length may not borrow an amount for any academic year of study that exceeds the amounts in paragraph (a)(1) of this section.

(9) Except as provided in paragraph (a)(4) of this section—

(i) An undergraduate student who is enrolled in a program that is more than one academic year in length and who has not successfully completed the first year of that program may not borrow an amount for any academic year of study that exceeds the amounts in paragraph (a)(1) of this section.

(ii) An undergraduate student who is enrolled in a program that is more than one academic year in length and who has successfully completed the first year of that program, but has not successfully completed the second year of the program, may not borrow an amount for any academic year of study that exceeds the amounts in paragraph (a)(2) of this section.

* * * * *

(c) * * *

(2) * * *

(viii) Except as provided in paragraph (c)(2)(iv) of this section, an undergraduate student who is enrolled in a program that is one academic year or less in length may not borrow an amount for any academic year of study that exceeds the amounts in paragraph (c)(2)(i) of this section.

(ix) Except as provided in paragraph (c)(2)(iv) of this section—

(A) An undergraduate student who is enrolled in a program that is more than one academic year in length and who has not successfully completed the first year of that program may not borrow an amount for any academic year of study that exceeds the amounts in paragraph (c)(2)(i) of this section.

(B) An undergraduate student who is enrolled in a program that is more than one academic year in length and who has successfully completed the first year of that program, but has not successfully completed the second year of the program, may not borrow an amount for any academic year of study that exceeds the amounts in paragraph (c)(2)(ii) of this section.

* * * * *

§ 685.211 [Amended]

33. Section 685.211(f) is amended by adding, in the first sentence after the paragraph heading, '', except for a loan on which a judgment has been obtained,'' after ''Loan''.

34. Section 685.212(a) is amended by adding a new paragraph (3) to read as follows:

§ 685.212 Discharge of a loan obligation.

(a) * * *

(3) In the case of a Direct PLUS Consolidation Loan, the Secretary discharges the portion of the outstanding balance of the consolidation loan attributable to any Direct PLUS Loan or Federal PLUS Loan that was obtained on behalf of a student who dies and that was repaid by the consolidation loan.

* * * * *

35. Section 685.220(l)(3) is revised to read as follows:

§ 685.220 Consolidation.

* * * * *

(1) * * *

(3) *Discharge.* (i) If a borrower dies and the Secretary receives the documentation described in § 685.212(a), the Secretary discharges

the portion of the outstanding balance of the consolidation loan attributable to any of that borrower's loans that were repaid by the consolidation loan.

(ii) If a borrower meets the requirements for total and permanent disability discharge under § 685.212(b), the Secretary discharges the portion of the outstanding balance of the consolidation loan attributable to any of that borrower's loans that were repaid by the consolidation loan.

(iii) If a borrower meets the requirements for discharge under § 685.212(d), (e), or (f) on a loan that was consolidated into a joint Direct Consolidation Loan, the Secretary discharges the portion of the consolidation loan equal to the amount of the loan that would be eligible for discharge under the provisions of § 685.212(d), (e), or (f) as applicable, and that was repaid by the consolidation loan.

(iv) If a borrower meets the requirements for loan forgiveness under § 685.212(h) on a loan that was consolidated into a joint Direct Consolidation Loan, the Secretary repays the portion of the outstanding balance of the consolidation loan attributable to the loan that would be eligible for forgiveness under the provisions of § 685.212(h), and that was repaid by the consolidation loan.

36. Section 685.304 is amended:

A. By revising paragraphs (a)(1), (a)(2), (a)(3), and (a)(5).

B. In paragraph (b)(1), by removing ''conduct'' and adding, in its place, ''ensure that''; by adding ''is conducted'' after ''counseling''; and by adding ''Loan'' after ''Subsidized''.

C. In paragraph (b)(2), by adding, in the first sentence, ''exit'' after ''The''; by removing, in the second sentence, ''knowledge of'' and adding, in its place, ''expertise in''; by removing, in the last sentence, ''the school may provide''; and by adding, in the last sentence, ''may be provided'' after the second occurrence of ''borrower''.

D. In paragraph (b)(3), by removing ''school must provide''; and by adding ''must be provided'' after the second occurrence of ''counseling''.

E. By revising paragraph (b)(4).

F. By revising paragraph (b)(5).

G. By redesignating paragraph (b)(6) as (b)(7).

H. By adding a new paragraph (b)(6).

The revisions and addition read as follows:

§ 685.304 Counseling borrowers.

(a) * * * (1) Except as provided in paragraph (a)(4) of this section, a school must ensure that initial counseling is conducted with each Direct Subsidized Loan or Direct Unsubsidized Loan borrower prior to making the first disbursement of the proceeds of a loan to a student borrower unless the student borrower has received a prior Direct Subsidized, Direct Unsubsidized, Federal Stafford, or Federal SLS Loan.

(2) The initial counseling must be in person, by audiovisual presentation, or by interactive electronic means. In each case, the school must ensure that an individual with expertise in the title IV programs is reasonably available shortly after the counseling to answer the student borrower's questions. As an alternative, in the case of a student borrower enrolled in a correspondence program or a study-abroad program approved for credit at the home institution, the student borrower may be provided with written counseling materials before the loan proceeds are disbursed.

(3) The initial counseling must—

(i) Explain the use of a Master Promissory Note (MPN);

(ii) Emphasize to the borrower the seriousness and importance of the repayment obligation the student borrower is assuming;

(iii) Describe the likely consequences of default, including adverse credit reports, garnishment of wages, Federal offset, and litigation;

(iv) Inform the student borrower of sample monthly repayment amounts based on a range of student levels of indebtedness or on the average indebtedness of Direct Subsidized Loan and Direct Unsubsidized Loan borrowers at the same school;

(v) Emphasize that the student borrower is obligated to repay the full amount of the loan even if the student borrower does not complete the program, is unable to obtain employment upon completion, or is otherwise dissatisfied with or does not receive the educational or other services that the student borrower purchased from the school.

* * * * *

(5) If initial counseling is conducted through interactive electronic means, a school must take reasonable steps to ensure that each student borrower receives the counseling materials, and participates in and completes the initial counseling.

* * * * *

(b) * * *

(4) The exit counseling must—

(i) Inform the student borrower of the average anticipated monthly repayment amount based on the student borrower's indebtedness or on the average indebtedness of Direct Subsidized Loan or Direct Unsubsidized Loan borrowers at the same school or in the same program of study at the same school;

(ii) Review for the student borrower available repayment options including the standard repayment, extended repayment, graduated repayment, and income contingent repayment plans, and loan consolidation;

(iii) Suggest to the student borrower debt-management strategies that would facilitate repayment;

(iv) Explain to the student borrower how to contact the party servicing the student borrower's Direct Loans;

(v) Meet the requirements described in paragraphs (a)(3)(i), (ii), (iii), and (v) of this section;

(vi) Review for the student borrower the conditions under which the student borrower may defer or forbear repayment or obtain a full or partial discharge of a loan;

(vii) Review for the student borrower information on the availability of the Department's Student Loan Ombudsman's office;

(viii) Inform the student borrower of the availability of title IV loan information in the National Student Loan Data System (NSLDS); and

(ix) Require the student borrower to provide current information concerning name, address, social security number, references, and driver's license number and State of issuance, as well as the student borrower's expected permanent address, the address of the student borrower's next of kin, and the name and address of the student borrower's expected employer (if known).

(5) The school must ensure that the information required in paragraph (b)(4)(ix) of this section is provided to the Secretary within 60 days after the student borrower provides the information.

(6) If exit counseling is conducted through interactive electronic means, a school must take reasonable steps to ensure that each student borrower receives the counseling materials, and participates in and completes the exit counseling.

* * * * *

[FR Doc. 02–19521 Filed 8–5–02; 8:45 am]

BILLING CODE 4000–01–U

Federal Register

Tuesday,
August 6, 2002

Part V

Department of Health and Human Services

Centers for Disease Control and Prevention

OMB Approval of Data Collection; Notice

DEPARTMENT OF HEALTH AND HUMAN SERVICES

Centers for Disease Control and Prevention

Notice of OMB Approval of Data Collection

AGENCY: Centers for Disease Control and Prevention, Department of Health and Human Services.

ACTION: General notice.

SUMMARY: The purpose of this Notice is to announce OMB approval of data collection, ''Notification of Possession of Select Agents,'' under the Paperwork Reduction Act of 1995 (PRA). The OMB Control Number for this data collection is 0920–0561. The data collection will expire January 31, 2003.

FOR FURTHER INFORMATION CONTACT: Anne O'Connor, Assistant Reports Clearance Officer, Centers for Disease Control and Prevention, Office of Program Planning and Evaluation, 1600 Clifton Road NE, Mailstop D–24, Atlanta, Georgia 30333. Telephone: (404) 498–1210.

SUPPLEMENTARY INFORMATION:

Background

On June 12, 2002, the President signed the Public Health Security and Bioterrorism Preparedness and Response Act of 2002 (The Act). The Act requires that all persons in possession of any ''Select Agent'' notify the Secretary of the Department of Health and Human Services (DHHS) by September 10, 2002. Section 213(b) of The Act requires all persons in possession of any ''High Consequence Livestock Pathogen or Toxin'' notify the Secretary of the U.S. Department of Agriculture (USDA) by October 8, 2002. The Centers for Disease Control and Prevention (CDC) has been designated as the agency responsible for providing guidance on this notification to the Secretary, DHHS. The Animal and Plant Health Inspection Service (APHIS) has been designated as the agency responsible for providing guidance on this notification to the Secretary, USDA. In order to minimize the reporting burden to the public, CDC and APHIS created a common notification form.

In compliance with requirements of the Paperwork Reduction Act of 1995 (PRA), CDC published a notice in the **Federal Register** on July 2, 2002 inviting public comment on the proposed data collection regarding: (a) Whether the proposed collection of information is necessary for the proper performance of the functions of the agency, including whether the information has practical utility; (b) the accuracy of the agency's estimate of the burden of the proposed collection of the information; (c) ways to enhance the quality, utility, and clarity of the information collected; and (d) ways to minimize the burden of collection of information on respondents, including through the use of automated collection techniques or other forms of information technology. The public was asked to submit their comments within 14 days of the publication of the notice.

Discussion of Comments

CDC received a number of comments to the **Federal Register** Notice regarding five issues related to the proposed data collection.

Comment: Many commenters requested a definition of the term 'facility.' *CDC Response:* The Guidance Document (see below) provides a definition of facility. For the purposes of this data collection, facility is defined as any individual, or government agency, university, corporation, company, partnership, society, association, firm or other legal entity located at a single geographic site. A single geographic site is a building or complex of buildings at a single mailing address.

Comment: A number of commenters were concerned that clinical and diagnostic laboratories were being required to submit the notification form because they interpreted sections of The Act as exempting these facilities from submitting the notification form. *CDC Response:* Although exemption of these laboratories was discussed during the development of this legislation, Congress explicitly rejected any broad exclusion of these facilities. A fuller explanation of Congressional intent on this subject is contained in the House Conference Report No. 107–481 to accompany H.R. 3448, May 21, 2002, at page 122. Congress permits exemption of such clinical and diagnostic laboratories from registration requirements, ''* * * only if they report the identification of select agents to the Secretary and either promptly transfer the agent to a registered person or destroy the agent on site in accordance with regulations established by the Secretary.'' The conference report further explains that laboratories which possess select agents for *reference purposes* must register and be subject to this full regulatory program. Although all clinical and diagnostic laboratories must participate in this *initial notification* phase under the legislation, DHHS and USDA will promptly develop, through rule-making, the regulations that will allow exemptions for those laboratories who only possess, use, or transfer select agents contained in specimens presented for *diagnosis, verification,* or *proficiency testing.* In order to comply with Congressional intent, CDC and APHIS are requiring all clinical and diagnostic laboratories that possess any agent or toxin listed on the notification form to submit a form to the address provided.

Comment: A number of commenters asked that CDC reconsider the requirement that facilities that do not possess a select agent complete and submit a declaration of non-possession. *CDC response:* CDC recognizes that The Act does not explicitly address this particular issue of a non-possession declaration. Asking respondents to declare non-possession is a critical means of ensuring that DHHS is knowledgeable of the potential universe of possessors of regulated agents and is necessary in order to effectively carry out the statutory intent of responsibly governing the transfer, possession, and use of biological agents or toxins.

Comment: Other commenters were concerned that CDC had underestimated the amount of time necessary to review instructions, gather the data, and enter it onto the form. *CDC Response:* CDC recognizes that many respondents will need less than two hours to complete the form and that other respondents will need more than two hours. However, given the vast universe of respondents, CDC feels that an average of two hours to review the instructions, gather the data, and complete the form is a reasonable estimate.

Comment: Several commenters asked about the list of Select Agents on the form. *CDC Response:* The notification form contains the list of Select Agents that was published in the **Federal Register** on October 24, 1996. As part of the rule-making process, CDC will publish another notice in the **Federal Register** requesting public comment on proposed changes to the list of select agents.

OMB Approved Guidance Document and Form

After considering the comments, CDC and APHIS submitted the Guidance Document and Notification Form (see below) to OMB for approval under the Paperwork Reduction Act. On July 31, 2002, OMB approved the Guidance Document and Notification Form under OMB Control No. 0920–0561. Upon OMB approval, CDC and APHIS plan to conduct a targeted mailing of the Guidance Document and form to approximately 190,000 facilities. If facilities have not received a copy of the Guidance Document and form within 10 days of publication of this notice, they

should call 866–567–4232 to request a copy of the Guidance Document and form. The Guidance Document and form will also be available at both the CDC Web site (*http://www.cdc.gov/od/ohs/lrsat.htm*) and the APHIS Web site (*http://www.aphis.usda.gov/vs/ncie*).

Dated: August 1, 2002.

Nancy E. Cheal,

Acting Associate Director for Policy, Planning and Evaluation, Centers for Disease Control and Prevention.

[Approved Guidance Document and Notification Form follow.]

BILLING CODE 4163–18–P

Notification of Possession of Select Agents or High Consequence Livestock Pathogens and Toxins

Guidance Document

Introduction

Section 202(a) of the Public Health Security and Bioterrorism Preparedness and Response Act of 2002 ("The Act") requires that all persons in possession of any "Select Agent" notify the Secretary of the Department of Health and Human Services (DHHS) by September 10, 2002. Section 213(b) of the Public Health Security and Bioterrorism Preparedness and Response Act of 2002 requires all persons in possession of any "High Consequence Livestock Pathogens and Toxins" notify the Secretary of the Department of Agriculture (USDA) by October 8, 2002. The Act requires that both Secretaries be notified when an individual possesses agents that appear on both the "Select Agent" list and the "High Consequence Livestock Pathogens and Toxins" list. These agents are referred to as "Overlap Agents".

The Centers for Disease Control and Prevention (CDC) has been designated as the agency responsible for providing guidance on this notification to the Secretary, DHHS. The Animal and Plant Health Inspection Service (APHIS) has been designated as the agency responsible for providing guidance on this notification to the Secretary, USDA. In order to minimize the reporting burden to the public, DHHS/CDC and the USDA/APHIS have developed a common reporting form for this data collection. This form is designed to assist facilities with compliance with this legal obligation.

Step One. Who must respond to this request?

All facilities, including research, clinical, and diagnostic laboratories, that possess any agent or toxin listed on the attached notification form are required to complete the form and return it to the address provided below. All facilities receiving this form by mail must complete the appropriate responses. Exemptions to the notification of possession will be limited to persons or facilities that possess products that are, bear, or contain select agents or toxins that have been cleared, approved, licensed, or registered under the Federal Food, Drug, and Cosmetic Act, Section 351 of the Public Health Service Act, the Virus-Serum-Toxin Act, and the Federal Insecticide, Fungicide, and Rodenticide Act.

Since the Act was signed into law, CDC has received a number of inquiries about the inclusion of all clinical, and diagnostic laboratories during the initial notification of possession phase. Although exemption of these laboratories was discussed during the development of this legislation, Congress explicitly rejected any broad exclusion of these facilities.

A fuller explanation of Congressional intent on this subject is contained in the House Conference Report No. 107-481 to accompany H.R. 3448, May 21, 2002, at page 122. As discussed, Congress permits exemption of such clinical and diagnostic laboratories from registration requirements "...only if they report the identification of select agents to the

Secretary and either promptly transfer the agent to a registered person or destroy the agent on site in accordance with regulations established by the Secretary."

This conference report goes on to make it clear that such laboratories which possess select agents for reference purposes must register and be subject to this full regulatory program. Although all clinical and diagnostic laboratories must participate in this initial notification phase under the legislation, DHHS and USDA will promptly develop, through rulemaking, the regulations that will allow exemptions for those laboratories who only possess, use, or transfer select agents contained in specimens presented for diagnosis, verification, or proficiency testing. Therefore, in order to comply with Congressional intent, CDC and APHIS are requiring all clinical and diagnostic laboratories that possess any agent or toxin listed on the notification form to submit a form to the address provided.

Step Two. Who should complete this form?

Each facility should designate a Responsible Facility Official (RFO) to complete this form. The purpose of the RFO is to ensure management oversight of this notification requirement. The RFO should be either a safety officer, and/or senior management official of the facility who has been authorized to complete this form. Whenever possible, the RFO should not be an individual who actually possesses, uses or transfers such agents and toxins. The RFO must review and sign the 'Notification of Possession of Select Agents or High Consequence Livestock Pathogens and Toxins" form and will be the individual contacted if questions concerning the form arise. The RFO should consult with others (e.g., principal investigators) as necessary to obtain the information required to complete the form. The RFO should provide one form that represents a summary of all agents from his or her facility.

For the purpose of completing this notification form, a facility is defined as any individual or government agency, university, corporation, company, partnership, society, association, firm or other legal entity located at a single geographic site. A single geographic site is a building or complex of buildings at a single mailing address.

Step Three. How does the RFO fill out this form?

A. **All RFOs** must complete boxes #1-6.

B. Review the agents listed in box #7 and check each agent or toxin used or possessed by your facility. For each agent checked, check the appropriate descriptive category or categories, if known (e.g., viable, recombinant organisms, etc.). Definitions for the categories are listed below.

C. Provide the information in boxes #8-14. For box #8, Type of Facility, select the box that best describes your facility. For box #9, Type of Work Performed, check all boxes that apply to the facility.

D. **If your facility does not possess any agents on this list**, provide only the information requested in boxes #15-18.

E. Return the form to the address below.

F. Facilities that possess DHHS Select Agents or USDA/DHHS Overlap Agents must submit completed forms by September 10, 2002. Facilities that possess only USDA High Consequence Livestock Pathogens and Toxins must submit completed forms by October 8, 2002.

G. Do not report quantities of agents or toxins.

Definitions of Categories

- **Viable**: Capable of replication on its own, in cell culture, or in an appropriate host.
- **Recombinant organism, Nucleic acid, or Genetic elements from agent** include any of the following:
  - Nonviable agents
  - Full-length nucleic acid from any of the viruses on the list. For Variola major virus (Smallpox), any segment that exceed 100 nucleotides in length.
  - Natural or synthetic nucleic acids from bacteria, fungi, or viruses on the list that encode for either a functional toxin or virulence factor sufficient to cause disease, or natural or synthetic nucleic acid that encodes for a functional toxin of any of the toxins listed, if: (1) expressed *in vivo*; (2) in an expression vector or host chromosome; or (3) in a carrier plasmid.
- **Altered USDA or FDA approved vaccine strains**: Vaccine strains that have been modified from their original licensed, approved, or registered forms.

Obtaining extra copies of this form

Please call 866-567-4232 to obtain additional copies of this form. The notification form and Guidance Document is viewable on both the CDC website (http://www.cdc.gov/od/ohs/lrsat.htm) and the APHIS website (http://www.aphis.usda.gov/vs/ncie).

Return this form to:

Analytical Sciences, Inc.
Attn: FSO
P.O. Box 341809
Bethesda, MD 20827

Help Line: 866-567-4232
(8:00 am to 8:00 pm EDT)

NOTE: If you desire confirmation of delivery, please return your completed Notification Form using the **US Postal Service Priority Mail** in the 9.5" x 12" cardboard Priority Mail envelope (EP-14G) and complete and attach a fluorescent green **US Postal Service Delivery Confirmation Receipt** (PS Form 152) label to the envelope. You may track the delivery of your Notification form via the US Postal Service Web site at http://www.usps.com/shipping/deliveryconfirm.htm or by calling 800-222-1811 toll-free. Do **not** use the fluorescent pink US Postal Service Signature Confirmation Receipt (PS Form 153) or send the form via Certified Mail (PS Form 3800) as ASI will be unable to sign for these forms and they will be returned to you.

FORM APPROVED
OMB NO. 0920-0561
EXP DATE 01/31/2003

NOTIFICATION OF POSSESSION OF SELECT AGENTS OR HIGH CONSEQUENCE LIVESTOCK PATHOGENS AND TOXINS

USDA

1. NAME OF FACILITY	2. NAME OF RESPONSIBLE FACILITY OFFICIAL (RFO) AND ADDRESS, IF DIFFERENT FROM FACILITY
3. ADDRESS OF FACILITY	4. TITLE OF RFO
	5. RFO TELEPHONE NUMBER
	6. RFO FAX NUMBER

7. CHECK ("X") FOR EACH AGENT(S) OR TOXIN(S) USED OR POSSESSED BY YOUR FACILITY (CHECK ONE OR MORE CATEGORIES AS APPROPRIATE)	VIABLE	RECOMBINANT ORGANISM, NUCLEIC ACID OR GENETIC ELEMENTS FROM AGENT	ALTERED USDA OR FDA APPROVED VACCINE STRAINS	REGISTERED WITH HHS SELECT AGENT PROGRAM
HHS SELECT AGENTS				
☐ CRIMEAN-CONGO HAEMORRHAGIC FEVER VIRUS				
☐ EBOLA VIRUSES				
☐ LASSA FEVER VIRUS				
☐ MARBURG VIRUS				
☐ *RICKETTSIA PROWAZEKII*				
☐ *RICKETTSIA RICKETTSII*				
☐ SOUTH AMERICAN HAEMORRHAGIC FEVER VIRUSES				
☐ TICK-BORNE ENCEPHALITIS COMPLEX VIRUSES				
☐ VARIOLA MAJOR VIRUS (SMALLPOX VIRUS)				
☐ VIRUSES CAUSING HANTAVIRUS PULMONARY SYNDROME				
☐ YELLOW FEVER VIRUS				
☐ *YERSINIA PESTIS*				
☐ ABRIN				
☐ CONOTOXINS				
☐ DIACETOXYSCIRPENOL				
☐ RICIN				
☐ SAXITOXIN				
☐ TETRODOTOXIN				
USDA-HHS OVERLAP AGENTS				
☐ *BACILLUS ANTHRACIS*				
☐ *BRUCELLA ABORTUS*				
☐ *BRUCELLA MELITENSIS*				
☐ *BRUCELLA SUIS*				
☐ *BURKHOLDERIA (PSEUDOMONAS) MALLEI*				
☐ *BURKHOLDERIA (PSEUDOMONAS) PSEUDOMALLEI*				
☐ *CLOSTRIDIUM BOTULINUM*				
☐ *COCCIDIOIDES IMMITIS*				
☐ *COXIELLA BURNETII*				
☐ EASTERN EQUINE ENCEPHALITIS VIRUS				
☐ EQUINE MORBILLIVIRUS (HENDRA VIRUS)/NIPAH VIRUS				
☐ *FRANCISELLA TULARENSIS*				
☐ RIFT VALLEY FEVER VIRUS				
☐ VENEZUELAN EQUINE ENCEPHALITIS VIRUS				
☐ AFLATOXINS				
☐ BOTULINUM TOXINS				
☐ *CLOSTRIDIUM PERFRINGENS* EPSILON TOXIN				
☐ SHIGATOXIN				
☐ STAPHYLOCOCCAL ENTEROTOXIN				
☐ T-2 TOXIN				

CHECK ("X") FOR EACH AGENT(S) OR TOXIN(S) USED OR POSSESSED BY YOUR FACILITY (CHECK ONE OR MORE CATEGORIES AS APPROPRIATE)	VIABLE	RECOMBINANT ORGANISM, NUCLEIC ACID OR GENETIC ELEMENTS FROM AGENT	ALTERED USDA OR FDA APPROVED VACCINE STRAINS	REGISTERED WITH HHS SELECT AGENT PROGRAM
USDA HIGH CONSEQUENCE LIVESTOCK PATHOGENS AND TOXINS				
☐ AFRICAN HORSE SICKNESS VIRUS				
☐ AFRICAN SWINE FEVER VIRUS				
☐ AKABANE VIRUS				
☐ AVIAN INFLUENZA VIRUS (HIGHLY PATHOGENIC)				
☐ BLUE TONGUE VIRUS (EXOTIC)				
☐ BOVINE SPONGIFORM ENCEPHALOPATHY AGENT				
☐ CAMEL POX VIRUS				
☐ CLASSICAL SWINE FEVER VIRUS				
☐ *COWDRIA RUMINANTIUM* (HEARTWATER)				
☐ FOOT AND MOUTH DISEASE VIRUS				
☐ GOAT POX VIRUS				
☐ JAPANESE ENCEPHALITIS VIRUS				
☐ LUMPY SKIN DISEASE VIRUS				
☐ MALIGNANT CATARRHAL FEVER				
☐ MENANGLE VIRUS				
☐ *MYCOPLASMA CAPRICOLUM/M.F 38/M.MYCOIDES CAPRI* (CONTAGIOUS CAPRINE PLEUROPNEUMONIA AGENT)				
☐ *MYCOPLASMA MYCOIDES MYCOIDES* (CONTAGIOUS BOVINE PLEUROPNEUMONIA AGENT)				
☐ NEWCASTLE DISEASE VIRUS (EXOTIC)				
☐ NIPAH VIRUS				
☐ PESTE DES PETITS RUMINANTS				
☐ RINDERPEST VIRUS				
☐ SHEEP POX VIRUS				
☐ SWINE VESICULAR DISEASE VIRUS				
☐ VESICULAR STOMATITIS VIRUS				

8. TYPE OF FACILITY: ☐ ACADEMIC ☐ GOVERNMENT ☐ COMMERCIAL ☐ PRIVATE ☐ OTHER (PLEASE EXPLAIN)

9. TYPE OF WORK PERFORMED AT FACILITY:
☐ DIAGNOSTIC WORK
☐ VACCINE DEVELOPMENT
☐ RESEARCH
☐ USE IN ANIMALS → ANIMAL SIZE: ☐ LIVESTOCK ☐ OTHER
☐ LARGE-SCALE PRODUCTION
☐ TEACHING
☐ STORAGE ONLY (NO CURRENT WORK)
☐ OTHER (PLEASE SPECIFY)

10. LIST ALL USDA VETERINARY PERMIT NUMBERS FOR IMPORTATION AND TRANSPORTATION OF CONTROLLED MATERIALS AND ORGANISMS AND VECTORS NUMBERS (VS Form 16-6A) (If applicable)

11. CDC SELECT AGENT TRANSFER PROGRAM REGISTRATION NUMBER AND EXPIRATION DATE (If applicable)

I hereby certify that I have been designated as the Responsible Facility Official for the institution/organization listed above, that I am authorized to bind the institution/organization, and that the information supplied on this form is to the best of my knowledge accurate and truthful. I understand that a false statement on any part of this form could result in a fine up to $500,000 or imprisonment of up to five years, or both for each violation (18 U.S.C §1001; 1 8 U.S.C § § 3559,3571)

12. SIGNATURE OF RESPONSIBLE FACILITY OFFICIAL

13. TYPED NAME AND TITLE | 14. DATE

15. ☐ **DECLARATION OF NON-POSSESSION: THIS FACILITY DOES NOT POSSESS ANY AGENT ON THIS LIST.**

I hereby certify that I have been designated as the Responsible Facility Official for the institution/organization listed above, that I am authorized to bind the institution/organization, and that the information supplied on this form is to the best of my knowledge accurate and truthful. I understand that a false statement on any part of this form could result in a fine of up to $500,000 or imprisonment of up to five years, or both for each violation (18 U.S.C §1001 8 U.S.C § § 3559,3571).

16. SIGNATURE OF RESPONSIBLE FACILITY OFFICIAL

17. TYPED NAME AND TITLE | 18. DATE

Public reporting burden of this collection of information is estimated to average 2 hours per response, including the time for reviewing instructions, searching existing data sources, gathering and maintaining the data needed and completing and reviewing the collection of information. An agency may not conduct or sponsor, and a person is not required to respond to a collection of information unless it displays a currently valid OMB control number. Send comments regarding this burden estimate or any other aspect of this collection of information, including suggestions for reducing this burden to CDC/ATSDR Information Clearance Officer, 1600 Clifton Road NE, MS D-24, Atlanta, Georgia 30333; ATTN: PRA (0920-xxxx).

RETURN THIS FORM TO:
Analytical Sciences, Inc.
Attn FSO
P.O. Box 371809
Bethesda, MD 20827

CDC FORM 50.01 Date: 07/2002

[FR Doc. 02–19897 Filed 8–2–02; 11:33 am]

BILLING CODE 4163–18–C

Reader Aids

Federal Register

Vol. 67, No. 151

Tuesday, August 6, 2002

CUSTOMER SERVICE AND INFORMATION

Federal Register/Code of Federal Regulations	
General Information, indexes and other finding aids	**202–523–5227**
Laws	**523–5227**
Presidential Documents	
Executive orders and proclamations	**523–5227**
The United States Government Manual	**523–5227**
Other Services	
Electronic and on-line services (voice)	**523–3447**
Privacy Act Compilation	**523–3187**
Public Laws Update Service (numbers, dates, etc.)	**523–6641**
TTY for the deaf-and-hard-of-hearing	**523–5229**

ELECTRONIC RESEARCH

World Wide Web

Full text of the daily Federal Register, CFR and other publications is located at: **http://www.access.gpo.gov/nara**

Federal Register information and research tools, including Public Inspection List, indexes, and links to GPO Access are located at: **http://www.nara.gov/fedreg**

E-mail

FEDREGTOC-L (Federal Register Table of Contents LISTSERV) is an open e-mail service that provides subscribers with a digital form of the Federal Register Table of Contents. The digital form of the Federal Register Table of Contents includes HTML and PDF links to the full text of each document.

To join or leave, go to **http://listserv.access.gpo.gov** and select *Online mailing list archives, FEDREGTOC-L, Join or leave the list (or change settings);* then follow the instructions.

PENS (Public Law Electronic Notification Service) is an e-mail service that notifies subscribers of recently enacted laws.

To subscribe, go to **http://hydra.gsa.gov/archives/publaws-l.html** and select *Join or leave the list* (or change settings); then follow the instructions.

FEDREGTOC-L and **PENS** are mailing lists only. We cannot respond to specific inquiries.

Reference questions. Send questions and comments about the Federal Register system to: **info@fedreg.nara.gov**

The Federal Register staff cannot interpret specific documents or regulations.

FEDERAL REGISTER PAGES AND DATE, AUGUST

49855–50342 1
50343–50580 2
50581–50790 5
50791–51064 6

CFR PARTS AFFECTED DURING AUGUST

At the end of each month, the Office of the Federal Register publishes separately a List of CFR Sections Affected (LSA), which lists parts and sections affected by documents published since the revision date of each title.

3 CFR

Executive Orders:
12722 (See Notice of July 30, 2002) 50341
12724 (See Notice of July 30, 2002) 50341
Administrative Orders:
Notices:
Notice of July 30, 2002 50341
Presidential Determinations:
No. 2002–26 of July 17, 2002 50343

5 CFR

532 (2 documents) 49855
2634.....49856
Proposed Rules:
532 (2 documents) 49878, 49879

7 CFR

735.....50778
736.....50778
737.....50778
738.....50778
739.....50778
740.....50778
741.....50778
742.....50778
928.....50581
1160.....49857
Proposed Rules:
701.....49879
1001.....49887

9 CFR

77.....50791
Proposed Rules:
112.....49891
113.....49891, 50606

10 CFR

Proposed Rules:
50.....50374
52.....50374

11 CFR

100.....50582

13 CFR

Proposed Rules:
121.....50383

14 CFR

39 .....49858, 49859, 49861, 50345, 50347, 50764, 50791, 50793, 50799
Proposed Rules:
39.....50383

15 CFR

774.....50348
902.....50292

17 CFR

Proposed Rules:
15.....50608
230.....50326
240.....50326

21 CFR

510.....50802
520.....50596

22 CFR

41.....50349
196.....50802

24 CFR

903.....51030

26 CFR

1.....49862
301.....49862
Proposed Rules:
1 .....49892, 50386, 50510, 50840
31.....50386
301.....50840

28 CFR

542.....50804

29 CFR

Proposed Rules:
1926.....50610

33 CFR

117.....50349
165.....50351
Proposed Rules:
Ch. I 50840
117.....50842, 50842
165.....50846
334.....50389, 50390
385.....50340

34 CFR

Proposed Rules:
200.....50986
668.....51036
674.....51036
682.....51036
685.....51036

36 CFR

242.....50597
Proposed Rules:
242.....50619

39 CFR

927.....50353

40 CFR

51.....50600
52.....50602
81.....50805
93.....50808
180.....50354
272.....49864

Proposed Rules:

52 .....49895, 49897, 50391, 50847
272.....49900

42 CFR

405.....49982
412.....49982
413.....49982
485.....49982

Proposed Rules:

68d.....50622

44 CFR

64.....50817
65.....50362

46 CFR

Proposed Rules:

221.....50406

47 CFR

54.....50602
73 .....50603, 50819, 50820, 50821, 50822

Proposed Rules:

73 .....50850, 50851, 50852

48 CFR

1804.....50823
1813.....50823
1815.....50823
1819.....50824
1825.....50823
1852.....50823

49 CFR

192.....50824

50 CFR

216.....49869
622.....50367
648 .....50292, 50368, 50604
660.....49875, 50835
679.....49877, 50604

Proposed Rules:

17.....50626
100.....50619

REMINDERS

The items in this list were editorially compiled as an aid to Federal Register users. Inclusion or exclusion from this list has no legal significance.

RULES GOING INTO EFFECT AUGUST 6, 2002

ENERGY DEPARTMENT

Energy Efficiency and Renewable Energy Office

Consumer products; energy conservation program:

Energy conservation standards—-

Central air conditioners and heat pumps; published 5-23-02

FEDERAL COMMUNICATIONS COMMISSION

Common carrier services:

Incumbent local exchange carriers—

Accounting and ARMIS reporting requirements; comprehensive review; 2000 biennial regulatory review (Phase 2); published 2-6-02

HEALTH AND HUMAN SERVICES DEPARTMENT

Food and Drug Administration

Animal drugs, feeds, and related products:

Sponsor name and address changes—

Endo Pharmaceuticals, Inc.; published 8-6-02

JUSTICE DEPARTMENT

Prisons Bureau

Inmate control, custody, care, etc.:

Excluded matters; Administrative Remed Program; published 8-6-02

NATIONAL AERONAUTICS AND SPACE ADMINISTRATION

Federal Acquisition Regulation (FAR):

Small Business Competiveness Demonstration Project; published 8-6-02

Technical amendments; published 8-6-02

TRANSPORTATION DEPARTMENT

Federal Aviation Administration

Airworthiness directives:

Turbomeca S.A.; published 7-22-02

COMMENTS DUE NEXT WEEK

AGRICULTURE DEPARTMENT

Agricultural Marketing Service

Milk marketing orders:

Mideast; comments due by 8-12-02; published 6-11-02 [FR 02-14455]

AGRICULTURE DEPARTMENT

Agricultural Marketing Service

Mushroom promotion, research, and consumer information order; comments due by 8-15-02; published 7-16-02 [FR 02-17764]

AGRICULTURE DEPARTMENT

Agricultural Marketing Service

Specialty crops; import regulations:

Raisins, Other-Seedless Sulfured; comments due by 8-13-02; published 6-14-02 [FR 02-15059]

AGRICULTURE DEPARTMENT

Animal and Plant Health Inspection Service

Plant-related quarantine, foreign:

Gypsy moth host material from Canada; comments due by 8-13-02; published 6-14-02 [FR 02-15074]

Viruses, serums, toxins, etc.:

Equine influenza vaccine, killed virus; comments due by 8-15-02; published 8-1-02 [FR 02-19422]

COMMERCE DEPARTMENT

National Oceanic and Atmospheric Administration

Endangered and threatened species:

Findings on petitions, etc.—

Klamath River Basin coho salmon; comments due by 8-12-02; published 6-13-02 [FR 02-14959]

Fishery conservation and management:

West Coast States and Western Pacific fisheries—

West Coast salmon; comments due by 8-16-02; published 8-1-02 [FR 02-19429]

DEFENSE DEPARTMENT

Civilian health and medical program of uniformed services (CHAMPUS):

TRICARE program—

Sub-acute and long-term care program reform; comments due by 8-12-02; published 6-13-02 [FR 02-14707]

ENVIRONMENTAL PROTECTION AGENCY

Air pollutants, hazardous; national emission standards:

Generic Maximum Achievable Control Technology—

Spandex production; comments due by 8-12-02; published 7-12-02 [FR 02-12842]

ENVIRONMENTAL PROTECTION AGENCY

Air pollutants, hazardous; national emission standards:

Generic Maximum Achievable Control Technology—

Spandex production; correction; comments due by 8-12-02; published 7-12-02 [FR 02-12843]

Secondary aluminum production; comments due by 8-13-02; published 6-14-02 [FR 02-14627]

ENVIRONMENTAL PROTECTION AGENCY

Air quality implementation plans; approval and promulgation; various States:

California; comments due by 8-15-02; published 7-16-02 [FR 02-17696]

ENVIRONMENTAL PROTECTION AGENCY

Air quality implementation plans; approval and promulgation; various States:

California; comments due by 8-15-02; published 7-16-02 [FR 02-17697]

ENVIRONMENTAL PROTECTION AGENCY

Air quality implementation plans; approval and promulgation; various States:

California; comments due by 8-16-02; published 7-17-02 [FR 02-17702]

ENVIRONMENTAL PROTECTION AGENCY

Air quality implementation plans; approval and promulgation; various States:

California; comments due by 8-16-02; published 7-17-02 [FR 02-17703]

Georgia; comments due by 8-12-02; published 7-11-02 [FR 02-17317]

ENVIRONMENTAL PROTECTION AGENCY

Air quality implementation plans; approval and promulgation; various States:

Georgia; comments due by 8-12-02; published 7-11-02 [FR 02-17318]

ENVIRONMENTAL PROTECTION AGENCY

Air quality implementation plans; approval and promulgation; various States:

Georgia; comments due by 8-12-02; published 7-11-02 [FR 02-17456]

Tennessee; comments due by 8-15-02; published 7-16-02 [FR 02-17700]

ENVIRONMENTAL PROTECTION AGENCY

Air quality implementation plans; approval and promulgation; various States:

Tennessee; comments due by 8-15-02; published 7-16-02 [FR 02-17701]

ENVIRONMENTAL PROTECTION AGENCY

Hazardous waste program authorizations:

Georgia; comments due by 8-15-02; published 7-16-02 [FR 02-17694]

ENVIRONMENTAL PROTECTION AGENCY

Hazardous waste program authorizations:

Georgia; comments due by 8-15-02; published 7-16-02 [FR 02-17695]

ENVIRONMENTAL PROTECTION AGENCY

Hazardous waste:

Cathode ray tubes and mercury-containing equipment; comments due by 8-12-02; published 6-12-02 [FR 02-13116]

Identification and listing—

Exclusions; comments due by 8-12-02; published 7-12-02 [FR 02-17458]

ENVIRONMENTAL PROTECTION AGENCY

Hazardous waste:

Municipal solid waste landfills; location restrictions for airport safety; comments due by 8-12-02; published 7-11-02 [FR 02-16994]

ENVIRONMENTAL PROTECTION AGENCY

Hazardous waste:

Municipal solid waste landfills; location

restrictions for airport safety; comments due by 8-12-02; published 7-11-02 [FR 02-16995]

FEDERAL COMMUNICATIONS COMMISSION

Radio services special:
Maritime services—
Global Maritime Distress and Safety System; comments due by 8-15-02; published 5-17-02 [FR 02-12430]

FEDERAL TRADE COMMISSION

Textile Fiber Products Identification Act; implementation:
Lastol; comments due by 8-12-02; published 5-24-02 [FR 02-13151]

HEALTH AND HUMAN SERVICES DEPARTMENT

Food and Drug Administration

Medical devices:
Dental devices—
Root-form endosseous dental implants and abutments; reclassification from Class III to Class II; comments due by 8-12-02; published 5-14-02 [FR 02-12041]

HOUSING AND URBAN DEVELOPMENT DEPARTMENT

Public and Indian housing:
Native Hawaiian Housing Block Grant and Loan Guarantees for Native Hawaiian Housing Programs; comments due by 8-12-02; published 6-13-02 [FR 02-14721]

INTERIOR DEPARTMENT

Fish and Wildlife Service

Endangered and threatened species:
Critical habitat designations—
Blackburn's sphinx moth; comments due by 8-12-02; published 6-13-02 [FR 02-14683]
Various plant species from Lanai, HI; comments due by 8-15-02; published 7-16-02 [FR 02-18016]

INTERIOR DEPARTMENT

Minerals Management Service

Outer Continental Shelf; oil, gas, and sulphur operations:
Plans and information; comments due by 8-15-02; published 5-17-02 [FR 02-11641]

INTERIOR DEPARTMENT

Surface Mining Reclamation and Enforcement Office

Permanent program and abandoned mine land reclamation plan submissions:
Kentucky; comments due by 8-14-02; published 7-15-02 [FR 02-17654]
Montana; comments due by 8-14-02; published 7-15-02 [FR 02-17653]

PERSONNEL MANAGEMENT OFFICE

Prevailing rate systems; comments due by 8-16-02; published 7-17-02 [FR 02-17900]

RAILROAD RETIREMENT BOARD

Railroad Retirement Act:
Retirement age; definition; comments due by 8-16-02; published 6-17-02 [FR 02-15104]

SMALL BUSINESS ADMINISTRATION

Small business size standards:
Nonmanufacturer rule; waivers—
Small arms ammunition manufacturing; comments due by 8-16-02; published 8-2-02 [FR 02-19472]

SOCIAL SECURITY ADMINISTRATION

Social security benefits and supplemental security income:
Federal old-age, survivors, and disability benefits, and aged, blind, and disabled—
Residual functional capacity assessments and vocational experts and other sources use, clarifications; special profile incorporation into regulations; comments due by 8-12-02; published 6-11-02 [FR 02-13901]

TRANSPORTATION DEPARTMENT

Coast Guard

Ports and waterways safety:
East River, Manhattan, NY; safety zone; comments due by 8-16-02; published 7-26-02 [FR 02-18921]
Houston-Galveston Captain of Port Zone, TX; security zones; comments due by 8-12-02; published 6-11-02 [FR 02-14560]
Houston and Galveston Ports, TX; security zones; comments due by 8-12-02; published 6-11-02 [FR 02-14562]
Lower Mississippi River, New Orleans, LA; security zones; comments due by 8-12-02; published 6-11-02 [FR 02-14557]
St. Louis Captain of Port Zone, MO; security zones; comments due by 8-12-02; published 6-11-02 [FR 02-14556]

TRANSPORTATION DEPARTMENT

Federal Aviation Administration

Air traffic operating and flight rules, etc.:
Noise operating limits; transition to all Stage 3 fleet operating in 48 contiguous United States and District of Columbia; comments due by 8-14-02; published 7-15-02 [FR 02-17744]

TRANSPORTATION DEPARTMENT

Federal Aviation Administration

Airworthiness directives:
Airbus; comments due by 8-16-02; published 7-17-02 [FR 02-18027]
Boeing; comments due by 8-12-02; published 6-28-02 [FR 02-16310]
Boeing and McDonnell Douglas; comments due by 8-12-02; published 6-26-02 [FR 02-15661]
CFM International; comments due by 8-12-02; published 6-13-02 [FR 02-14856]

TRANSPORTATION DEPARTMENT

Federal Aviation Administration

Airworthiness directives:
Eurocopter France; comments due by 8-12-02; published 6-12-02 [FR 02-14568]

TRANSPORTATION DEPARTMENT

Federal Aviation Administration

Airworthiness directives:
General Electric; comments due by 8-12-02; published 6-13-02 [FR 02-14857]
General Electric Co.; comments due by 8-12-02; published 6-12-02 [FR 02-14700]
SOCATA-Groupe AEROSPATIALE; comments due by 8-14-02; published 7-12-02 [FR 02-17600]
Airworthiness standards:
Special conditions—
Eclipse Aviation Corp. Model 500 airplane; comments due by 8-16-02; published 7-17-02 [FR 02-18017]
New Piper Aircraft Corp., PA 34-200T, Seneca V airplanes; comments due by 8-16-02; published 7-17-02 [FR 02-18018]
Class E airspace; comments due by 8-16-02; published 7-17-02 [FR 02-17579]

TRANSPORTATION DEPARTMENT

Federal Motor Carrier Safety Administration

Hazardous materials transportation; driving and parking rules:
Motor carriers transporting hazardous materials; periodic tire check requirement; comments due by 8-15-02; published 7-16-02 [FR 02-17898]

TRANSPORTATION DEPARTMENT

Maritime Administration

Vessel financing assistance:
Deposit funds; establishment and administration; comments due by 8-12-02; published 6-12-02 [FR 02-14823]

TREASURY DEPARTMENT

Internal Revenue Service

Excise taxes:
Diesel fuel; blended taxable fuel; comments due by 8-14-02; published 5-16-02 [FR 02-12308]
Income taxes:
Gross proceeds payments to attorneys; reporting requirements; comments due by 8-15-02; published 5-17-02 [FR 02-12464]

TREASURY DEPARTMENT

Thrift Supervision Office

Savings associations; fiduciary powers; and securities transactions; recordkeeping and confirmation requirements; comments due by 8-12-02; published 6-11-02 [FR 02-14317]

VETERANS AFFAIRS DEPARTMENT

Board of Veterans Appeals:
Appeals regulations and rules of practice—
Aging veterans; speeding appellate review process; comments due by 8-12-02; published 6-12-02 [FR 02-14685]

LIST OF PUBLIC LAWS

This is a continuing list of public bills from the current session of Congress which have become Federal laws. It may be used in conjunction with ''P L U S'' (Public Laws Update Service) on 202–523–6641. This list is also available online at *http://www.nara.gov/fedreg/plawcurr.html*.

The text of laws is not published in the **Federal Register** but may be ordered in ''slip law'' (individual pamphlet) form from the Superintendent of Documents, U.S. Government Printing Office, Washington, DC 20402 (phone, 202–512–1808). The text will also be made available on the Internet from GPO Access at *http://www.access.gpo.gov/nara/nara005.html*. Some laws may not yet be available.

H.R. 4775/P.L. 107–206
2002 Supplemental Appropriations Act for Further Recovery From and Response To Terrorist Attacks on the United States (Aug. 2, 2002; 116 Stat. 820)
Last List August 5, 2002

Public Laws Electronic Notification Service (PENS)

PENS is a free electronic mail notification service of newly enacted public laws. To subscribe, go to *http://hydra.gsa.gov/archives/publaws-l.html* or send E-mail to **listserv@listserv.gsa.gov** with the following text message:

SUBSCRIBE PUBLAWS-L
Your Name.

Note: This service is strictly for E-mail notification of new laws. The text of laws is not available through this service. **PENS** cannot respond to specific inquiries sent to this address.